CITY OF SAN ANTONIO
TRANSPORTATION & CAPITAL IMPROVEMENTS

ADDENDUM NO. 3

PROJECT NAME: **BELFAST & JANDA SUSAN AREA DRAINAGE**

DATE: **4/27/2015**

ADDENDUM NO.3

This addendum should be included in and be considered part of the plans and specifications for the name of the project. The contractor shall be required to sign an acknowledgement of the receipt of this addendum and submit with their bid.

TCI PROJECT NO.: **40-00324**

Formal Invitation for Bid and Contract:

- **Bid Opening Date Change:**

  Substitute and utilize the revised "(10) Formal Invitation for Bids (IFB)"

  Bids will be received in the Office of the City Clerk until 2:00 P.M. on Tuesday, May 5, 2015, and then publicly opened and read aloud.

- **Utilize CPS Energy Gas Plans attached**

STATE OF TEXAS
CHRISTOPHER A. OTTO
113172
LICENSED
PROFESSIONAL ENGINEER

4/27/15

CITY OF SAN ANTONIO

Issued By: Transportation and Capital Improvements **Date Issued: April 1, 2015**
ID NO.: 40-00324

(010) FORMAL INVITATION FOR BIDS (IFB) to CONTRACT
BELFAST & JANDA SUSAN AREA DRAINAGE #40-00324

Sealed bids, subject to the Terms and Conditions of this Invitation for Bids and other contract provisions, will be received at the Office of the City Clerk, City Hall, 100 Military Plaza, 2nd floor San Antonio, Tx 78205 until **2:00 P.M. CST** on **Tuesday, May 5, 2015** and publicly read aloud in **City Council Chambers at 114 W. Commerce, Municipal Plaza Building**. This is the ***solicitation deadline***. Bids must be submitted in a sealed envelope and clearly marked with the due date of bid, bidder name, Project Name and ID NO. The City is not responsible for submissions not clearly and appropriately marked. Late submissions will be rejected and returned to bidder. A Non-Mandatory Pre-bid meeting will be held at 114 W. Commerce, San Antonio, TX 78205 in the 9th fl. conference room on Wednesday, April 8, 2015 at 2:00 P.M. **Deadline for questions:** 4:00 P.M., April 15, 2015.

This invitation includes the following Contract Documents:

010	Invitation for Bids and Contract Signature Page	060	Supplemental Conditions
020	Bid Form	075	Performance Bond
025	Unit Pricing Form	076	Payment Bond
040	Standard Instructions to Respondent	081	General Conditions for Construction Contracts
050.01	SBEDA Guidelines	◘	Wage Decision
◘	Subcontractor/Supplier Utilization Plan	095	SAWS Special Conditions

Plans, Specifications and Special Conditions may be purchased at a cost of **$100.00** per set (tax included) from the office of **Bury Partners, Inc., 922 Isom Road, San Antonio, TX 78216; Phone: (210) 525-9090**. No refund will be made for plan sets that are returned. Changes to Plans, Specifications and Special Conditions will be included in an addendum and will be posted on the web at **http://www.sanantonio.gov/purchasing/biddingcontract/opportunities.aspx** along with this solicitation. Bidder understands and agrees that bidder is responsible for obtaining addenda and adhering to all requirements in addenda. City is not responsible for incorrect information obtained through other sources.

The following documents (fully completed and with original signatures) constitute the required information to be submitted as a part of the bid proposal:

1.)	010	Invitation for Bids and Contract Signature Page	4.)	Bid Bond
2.)	020	Bid Form	5.)	Subcontractor/Supplier Utilization Plan
3.)	025	Unit Pricing Form	6.)	Signed Addenda Acknowledgement Forms

It is understood and agreed that the work is to be substantially completed on or before **180** calendar days. If accepted, the additive will allow **60** calendar days. This project does not include hazardous environmental work. This project requires 1 project sign.

Small Business Economic Development Advocacy (SBEDA) Program Compliance – Respondents shall meet the subcontracting requirements as stated on Form 050.01 and on the Subcontractor/Supplier Utilization Plan posted with this solicitation on the City's website.

Wage Decision – Respondent shall meet the prevailing wage rate requirements established for this contract and shall reference the wage decision posted with this solicitation on the City's website.

The undersigned, by his/her signature, represents that he/she is authorized to bind the bidder to fully comply with Contract Documents for the amount(s) shown on the accompanying bid sheet(s). The work proposed to be done shall be accepted when fully completed and finished to the entire satisfaction of the City. The undersigned certifies all prices contained in this bid have been carefully checked and are submitted as correct and final. The bidder by submitting this bid and signing below, acknowledges that he/she has received & read the entire Bid and Contract document and agrees to be bound by the terms therein, has received all Addenda, and agrees to the terms, conditions, and requirements of the bidder's bid proposal and all documents listed in the tables above and the enabling Ordinance and associated documentation that form the entire Contract upon approval by the City Council.

Official Name of Company (legal): _____

_____/_____ Signer's Name: _____
Original Signature of Person Authorized to Sign Bid/Contract Date (Please Print or Type)

Civic Improvement Project

Contract Exhibit Gas–6

Service Insertion Notes

1. Rerunning of services shall be done as designated (see General Note Number 2).
2. Insert 1" & 1 1/4" steel residential services with anodeless polyethylene (PE) as follows:
   a. 1" PE pipe should be run from the main to one foot inside the property line of the customer served.
   b. Insert with 1/2" IPS PE pipe beginning one foot inside the property line and terminating at the connection to the pig–tail of an anodeless riser.
   c. The 1/2" IPS PE pipe insertion shall not exceed 100 feet in length.
3. Steel services are to be replaced with anodeless risers of equal size.
4. Insertion shall not be used:
   a. on services 1 1/2" or larger.
   b. On services to a manifold that serves, or has the potential to serve, more than one meter.
5. Any variance from the above standards should be approved by Gas Engineering.

General Notes

1. All proposed gas mains are to be installed at 5'-0" of cover unless otherwise noted on the sketch, indicated on the Location Data Table, or as directed by the CPS Inspector or Field Representative. All proposed gas services are to be installed at the elevations indicated on the Location Data Table or as directed by the CPS Inspector or Field Representative.

2. All services labeled with an "R" are to be rerun from main to meter and services labeled with a "R1" are to be rerun from main to 1' inside the property line. From main to 1' inside the property line, the services are to be installed at the elevation indicated on the Location Data Table. For services labeled with a "T", the existing service is to be tied over to the new main and services labeled with an "A" are to be abandoned.

3. Gas main is to be abandoned in sections no longer than 300 feet. Each section is to be purged of gas with compressed air, and then the ends are to be sealed with concrete. All abandoned services are to be plugged. All valve boxes on abandoned mains are to be removed.

4. If the general contractor requires temporary tie-ins that are not shown on the CPS Energy sketch due to project phasing or to accommodate this project in any way, this work will be done at the general contractor's expense. General Contractor will also be responsible for all costs associated with power pole bracing whenever bracing is required for the installation of proposed gas facilities.

5. The locations of underground utilities indicated on the job sketch are taken from the best records available and are not guaranteed to be accurate. Foreman shall verify location and depth of all existing utilities, whether shown on the plans or not, and shall be responsible for the protection of existing utilities during construction.

6. Gas valves and underground gas facility access points should remain accessible at all times. Contractor must notify Richard Rodriguez with CPS Energy at (210) 353-2226 at least 48 hours prior to construction in order to adjust existing valve covers or access points within the proposed area of construction.

7. 48 hours before excavating, notify One-Call at 1-800-545-6005. This number should notify all utilities of locates. For Emergency gas locates call 210-353-HELP.

8. In accordance with the Texas Administrative Code Title 16, Part 1, Ch. 3 Rule 3.30 and in compliance with the Clean Water Act, 33 U.S.C. 1251, for projects that will disturb 1 or more acres of land or will disturb less than 1 acre of land but is part of a common plan of development that will ultimately disturb 1 or more acres the General Contractor is responsible for submitting the Notice of Intent (NOI) through the Electronic Notice of Intent Online System (eNOI) at the following web address: www.epa.gov/npdes/stormwater/cgpenoi . The General Contractor will need to ensure Sub-Contractor compliance under EPA Construction General Permit requirements. NOI must be certified 14 days prior to earth disturbing activities, in accordance with National Pollutant Discharge Elimination System (NPDES) EPA Construction General Permit.

9. All gas facilities will require proper connection for cathodic protection and locating purposes as indicated by CPS. Call Corrosion Control at 353-3237 prior to installing, adjusting, or abandoning gas lines and before connecting or disconnecting wires to any CPTLB.

10. All new polyethylene gas services and mains are to be joined by butt fusion. Compression couplings must not be used on new gas line construction.

11. TRENCH EXCAVATION PROTECTION: Contractor and/or Contractor's independently retained employee or structural design/geotechnical/ safety/equipment consultant, if any, shall review these plans and any available geotechnical information and the anticipated installation site(s) in order to develop the Contractor's plans to implement the project described in the Contract Documents. The Contractor's plans shall provide for adequate trench safety systems that comply with, as a minimum, OSHA standards for trench safety consultant shall develop and implement a trench safety program in accordance with OSHA standards governing the presence and activities of individuals working in and around trench excavation.

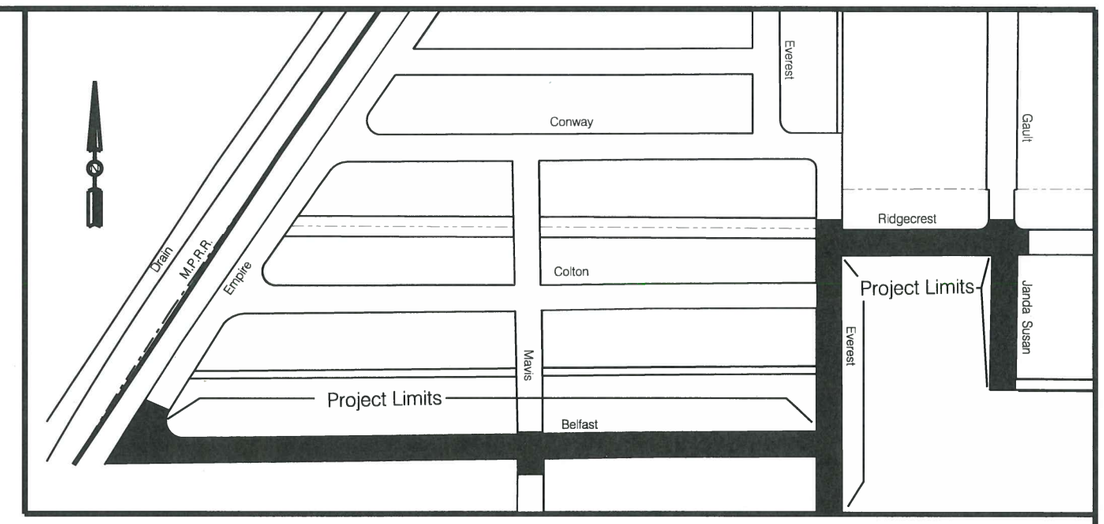

Location Map
NTS

9-9-14

STATE OF TEXAS
KYLE DAVID MARG
101167
LICENSED
PROFESSIONAL ENGINEER

City Road Work Phasing
Base – Sta. 100+09.02 to Sta. 108+97.41
Additive Alternate 1 – Sta. 108+97.41 to Sta. 113+95.50
Additive Alternate 2 – Sta. 113+95.50 to Sta. 300+81.81
Additive Alternate 3 – Sta. 300+81.81 to Sta. 400+18.10

Legend

- Center Line
- Existing Property Line
- Proposed Property Line
- Easement Line
- Existing Gas Service
- Existing Gas Main
- Install Gas Service
- Install Gas Main
- Abandon Gas
- Cable TV
- Telephone
- Sanitary Sewer
- Proposed Drainage
- Existing Drainage
- Electric
- Water

Construction Points		Install		Abandon	
From	To	Pipe Size	Length	Pipe Size	Length
1	2	2PA	1325	2	1397'
3	4	4PA	228'	4	180'
7	8	2PA	49'	2	38'
7	8			2PA	8'
9	10	4PA	412'	4PA	420'
11	12	4PA	35'	4	31'
13	14	2PA	280'	2	276'
15	16	4PA	40'	4	40'
				Total 2	1711'
				Total 4	251'
		Total 2PA	1654'	Total 2PA	8'
		Total 4PA	715'	Total 4PA	420'

Pressure Test	Construction	No.	Drawing Revision	Date
Minimum Test 90 PSIG	Contractor	0	Planning Completed	8-01-14
Tested To PSIG	Center			
By	By			
Date	Start Date			
	Comp. Date			

Checked By: KDM Date Approved: 9-9-14

Approved By: [signature] Date Approved: 9/9/14

Designed By: David McCord Ext. 8862

Map Quadrant: 167 - 610 2135383 13733450

Project No.: G-0272

Job Title: Belfast - Janda Susan Area Drainage

CPS ENERGY
P.O. BOX 1771
SAN ANTONIO, TX 78296

Job No. 1850692

All proposed gas mains and services are to be installed at the planned Gas Top of Pipe Elevation indicated on the Location Data Table.

POINT SPAN	PIPE PRINT LINE DATA (EXAMPLE SHOWN)
to	" IPS DR GAS PE3408/PE100 CEE ASTM D2513
to	" IPS DR GAS PE3408/PE100 CEE ASTM D2513
to	" IPS DR GAS PE3408/PE100 CEE ASTM D2513
to	" IPS DR GAS PE3408/PE100 CEE ASTM D2513
to	" IPS DR GAS PE3408/PE100 CEE ASTM D2513
to	" IPS DR GAS PE3408/PE100 CEE ASTM D2513
to	" IPS DR GAS PE3408/PE100 CEE ASTM D2513
to	" IPS DR GAS PE3408/PE100 CEE ASTM D2513
to	" IPS DR GAS PE3408/PE100 CEE ASTM D2513
to	" IPS DR GAS PE3408/PE100 CEE ASTM D2513
to	" IPS DR GAS PE3408/PE100 CEE ASTM D2513
to	" IPS DR GAS PE3408/PE100 CEE ASTM D2513
to	" IPS DR GAS PE3408/PE100 CEE ASTM D2513
to	" IPS DR GAS PE3408/PE100 CEE ASTM D2513

Example: 1 to 2 2" IPS DR11 DRISCOPIPE 8100 GAS PE3408/PE100 CEE ASTM D2513 WTO15 R NR 0356 A1-043 072706 COIL 0152

9-9-14

STATE OF TEXAS
KYLE DAVID MARG
101167
LICENSED
PROFESSIONAL ENGINEER

No.	Drawing Revision	Date
0	Planning Completed	8-01-14

Checked By: KDM Date Approved 9-9-14

Approved By: Date Approved 9/9/14

Designed By: Ext. 8862 David McCord

Map Quadrant 167 - 610 2135383 13733450

Project No. G-0272

Job Title Belfast - Janda Susan Area Drainage

CPS ENERGY
P.O. BOX 1771
SAN ANTONIO, TX 78296

Job No. 1850692

All proposed gas mains and services are to be installed at the planned Gas Top of Pipe Elevation indicated on the Location Data Table.

	Location			Grade Elevations			Gas Requirements		Planned Depth of Gas			Potential Conflicting Facility			Clearance	
CS4 Item #	Address	Location # / Street Name	Station Marker	Existing Grade	Proposed Final Grade	Estimated Subgrade	Gas Pipe Size	Planned Gas T.O.P. Elevation	From Existing Grade	From Final Grade	From Estimated Subgrade	Proposed Facility Description	Top Elevation	Bottom Elevation	Above Prop. Facility	Below Prop. Facility
4	106	Belfast	101+04	741.9	741.8	740.7	0.5" P	738.5	3.4	3.3	2.2	8" S.S.	736.4	735.6	2.0	
4	106	Belfast	101+04	741.9	741.8	740.7	0.5" P	738.5	3.4	3.3	2.2	60" RCP	735.5	729.5	2.9	
3	110	Belfast	101+63	743.0	742.9	741.8	0.5" P	739.1	3.9	3.8	2.7	60" RCP	735.8	729.8	3.2	
3	110	Belfast	101+63	743.0	742.9	741.8	0.5" P	739.1	3.9	3.8	2.7	8" S.S.	737.0	736.2	2.0	
4	111	Belfast	101+75	743.5	743.7	742.6	0.5" P	739.0	4.5	4.7	3.6					
4	114	Belfast	102+32	743.6	743.3	742.2	0.5" P	740.2	3.4	3.1	2.0	60" RCP	736.2	730.2	4.0	
4	114	Belfast	102+32	743.6	743.3	742.2	0.5" P	740.2	3.4	3.1	2.0	8" S.S.	737.8	737.0	2.3	
4	115	Belfast	102+62	745.1	744.7	743.6	0.5" P	740.6	4.5	4.1	3.0					
4	118	Belfast	102+90	744.6	743.9	742.8	0.5" P	740.8	3.8	3.1	2.0	60" RCP	736.5	730.5	4.2	
4	118	Belfast	102+90	744.6	743.9	742.8	0.5" P	740.8	3.8	3.1	2.0	8" S.S.	738.5	737.7	2.3	
4	119	Belfast	103+22	745.0	744.7	743.6	0.5" P	740.5	4.5	4.1	3.0					
4	122	Belfast	103+63	744.9	745.0	743.9	0.5" P	741.9	3.0	3.1	2.0	60" RCP	736.8	730.8	5.0	
4	122	Belfast	103+63	744.9	745.0	743.9	0.5" P	741.9	3.0	3.1	2.0	8" S.S.	739.5	738.7	2.3	
4	123	Belfast	103+74	745.3	745.1	744.0	0.5" P	740.8	4.5	4.3	3.2					
4	126	Belfast	104+19	745.0	745.0	743.9	0.5" P	741.9	3.1	3.1	2.0	60" RCP	737.2	731.2	4.6	
4	126	Belfast	104+19	745.0	745.0	743.9	0.5" P	737.3	7.7	7.7	6.6	8" S.S.	740.1	739.3		2.0
4	127	Belfast	104+35	745.8	745.4	744.3	0.5" P	741.3	4.5	4.1	3.0					
4	130	Belfest	104+80	746.3	746.1	745.0	0.5" P	743.0	3.3	3.1	2.0	60" RCP	737.5	731.5	5.4	
4	130	Belfast	104+80	746.3	746.1	745.0	0.5" P	743.0	3.3	3.1	2.0	8" S.S.	740.8	740.0	2.1	
4	131	Belfast	104+94	746.9	746.8	745.7	0.5" P	742.4	4.5	4.4	3.3					

	Location			Grade Elevations			Gas Requirements		Planned Depth of Gas			Potential Conflicting Facility			Clearance	
CS4 Item #	Address	Location # / Street Name	Station Marker	Existing Grade	Proposed Final Grade	Estimated Subgrade	Gas Pipe Size	Planned Gas T.O.P. Elevation	From Existing Grade	From Final Grade	From Estimated Subgrade	Proposed Facility Description	Top Elevation	Bottom Elevation	Above Prop. Facility	Below Prop. Facility
3	134	Belfest	105+39	746.2	746.7	745.6	0.5" P	743.6	2.6	3.1	2.0	60" RCP	738.2	732.2	5.3	
3	134	Belfest	105+39	746.2	746.7	745.6	0.5" P	738.9	7.3	7.8	6.7	8" S.S.	741.7	740.9		2.0
4	135	Belfast	105+58	747.0	747.3	746.2	0.5" P	742.5	4.5	4.8	3.6		730.4	730.4		
4	138	Belfast	106+06	747.1	746.9	745.8	0.5" P	743.8	3.3	3.1	2.0	60"RCP	738.6	732.6	5.1	
4	138	Belfast	106+06	747.1	746.9	745.8	0.5" P	739.7	7.3	7.1	6.0	8" S.S.	742.5	741.7		2.0
4	139	Belfast	106+19	747.1	747.4	746.3	0.5" P	742.6	4.5	4.9	3.8					
4	142	Belfast	106+68	748.2	748.9	747.8	0.5" P	745.8	2.4	3.1	2.0	60" RCP	738.9	732.9	6.8	
4	142	Belfast	106+68	748.2	748.9	747.8	0.5" P	745.8	2.4	3.1	2.0	8" S.S.	743.4	742.6	2.3	
4	143	Belfast	106+81	748.6	748.0	746.9	0.5" P	744.1	4.5	3.9	2.8					
4	147	Belfast	107+35	748.6	748.7	747.6	0.5" P	744.1	4.5	4.6	3.5					
4	146	Belfast	107+41	748.4	748.1	747.0	0.5" P	745.0	3.4	3.1	2.0	60"RCP	738.3	732.3	6.7	
4	146	Belfast	107+41	748.4	748.1	747.0	0.5" P	741.6	6.8	6.5	5.4	8" S.S.	744.4	743.6		2.0
4	150	Belfast	108+02	749.0	748.8	747.7	0.5" P	745.7	3.4	3.1	2.0	60" RCP	739.5	733.5	6.0	
4	150	Belfast	108+02	749.0	748.8	747.7	0.5" P	742.4	6.6	6.3	5.2	8" S.S.	745.2	744.4		2.0
4	151	Belfast	107+98	749.0	749.5	748.4	0.5" P	744.5	4.5	5.0	3.9					
4	203	Belfast	108+67	751.9	751.5	750.4	0.5" P	747.4	4.5	4.1	3.0					
3	202	Belfast	109+07	751.6	751.1	750.0	0.5" P	748.0	3.6	3.1	2.0	60"RCP	743.4	737.4	4.6	
3	202	Belfast	109+07	751.6	751.1	750.0	0.5" P	744.0	7.6	7.2	6.1	8" S.S.	746.8	746.0		2.0
3	206	Belfast	109+66	752.0	753.5	752.4	0.5" P	750.4	1.6	3.1	2.0	60" RCP	743.6	737.6	6.7	
3	206	Belfast	109+66	752.0	753.5	752.4	0.5" P	750.4	1.6	3.1	2.0	8" S.S.	747.9	747.1	2.4	
6	207	Belfast	109+66	752.5	753.3	752.2	0.5" P	748.0	4.5	5.3	4.2					
6	211	Belfast	110+22	752.4	753.3	752.2	0.5" P	747.9	4.5	5.5	4.4					
4	210	Belfast	110+27	753.3	753.1	752.0	0.5" P	750.0	3.3	3.1	2.0	60" RCP	744.0	738.0	6.0	
4	210	Belfast	110+27	753.3	753.1	752.0	0.5" P	746.3	7.0	6.8	5.7	8" S.S.	749.1	748.3		2.0
3	214	Belfast	110+85	756.1	755.5	754.4	0.5" P	752.4	3.7	3.1	2.0	60" RCP	744.3	738.3	8.0	
3	214	Belfast	110+85	756.1	755.5	754.4	0.5" P	752.4	3.7	3.1	2.0	8" S.S.	750.3	749.5	2.0	
6	215	Belfast	110+85	756.4	756.4	755.3	0.5" P	751.9	4.5	4.5	3.4					

NOTE: Clearance of proposed facilities represents the distance (feet) between the outside diameter of the gas line and the outside edge of the proposed buried utility. All dimensions are in feet.

9-9-14

STATE OF TEXAS
KYLE DAVID MARG
101167
LICENSED
PROFESSIONAL ENGINEER

No.	Drawing Revision	Date
0	Planning Completed	8-01-14

Checked By: KDM Date Approved 9-9-14

Approved By: P Marecka Date Approved 9/9/14

Designed By: Ext. 8862 David McCord

Map Quadrant 167 - 610 2135383 13733450

Project No. G-0272

Job Title Belfast - Janda Susan Area Drainage

CPS ENERGY
P.O. BOX 1771
SAN ANTONIO, TX 78296

Job No. 1850692

All proposed gas mains and services are to be installed at the planned Gas Top of Pipe Elevation indicated on the Location Data Table.

Page 7 of 9

CS4 Item #	Location: Address	Location: Location # / Street Name	Station Marker	Grade Elevations: Existing Grade	Grade Elevations: Proposed Final Grade	Grade Elevations: Estimated Subgrade	Gas Requirements: Gas Pipe Size	Gas Requirements: Planned Gas T.O.P. Elevation	Planned Depth of Gas: From Existing Grade	Planned Depth of Gas: From Final Grade	Planned Depth of Gas: From Estimated Subgrade	Potential Conflicting Facility: Proposed Facility Description	Potential Conflicting Facility: Top Elevation	Potential Conflicting Facility: Bottom Elevation	Clearance: Above Prop. Facility	Clearance: Below Prop. Facility
	5	Everest	201+68	7628.0	763.2	762.1	2.0" P	760.1	6867.9	3.1	2.0	48" RCP	753.3	748.5	6.6	
	6	Everest	202+95	762.8	762.8	761.7	4.0" P	757.5	5.3	5.3	4.2	24" RCP	762.0	759.5		2.0
4	218	Belfest	111+43	755.9	755.7	754.6	0.5" P	752.6	3.3	3.1	2.0	60" RCP	744.5	738.5	8.0	
4	219	Belfest	111+43	756.0	756.3	755.2	0.5" P	751.5	4.5	4.8	3.7					
3	222	Belfast	112+06	757.6	757.1	756.0	0.5" P	754.0	3.6	3.1	2.0	60" RCP	744.8	738.8	9.1	
3	222	Belfast	112+06	757.6	757.1	756.0	0.5" P	749.7	7.9	7.4	6.3	8" S.S.	752.5	751.7		2.0
6	223	Belfast	112+09	757.3	757.9	756.8	0.5" P	752.8	4.5	5.0	3.9					
6	227	Belfast	112+67	759.5	760.3	759.2	0.5" P	755.0	4.5	5.3	4.2					
3	226	Belfast	112+71	759.9	759.3	758.2	0.5" P	756.2	3.7	3.1	2.0	60" RCP	745.2	739.2	11.0	
3	226	Belfast	112+71	759.9	759.3	758.2	0.5" P	756.2	3.7	3.1	2.0	8" S.S.	753.8	753.0	2.3	
6	231	Belfast	113+25	759.8	760.4	759.3	0.5" P	755.3	4.5	5.1	4.0					
3	230	Belfast	113+30	760.5	759.7	758.6	0.5" P	756.6	3.9	3.1	2.0	60" RCP	745.5	739.5	11.1	
3	230	Belfast	113+30	760.5	759.7	758.6	0.5" P	752.1	8.4	7.6	6.5	8" S.S.	754.9	754.1		2.0
4	234	Belfast	113+83	763.6	763.5	762.4	0.5" P	760.4	3.1	3.1	2.0	60" RCP	745.7	739.7	14.6	
4	234	Belfast	113+83	763.6	763.5	762.4	0.5" P	760.4	3.1	3.1	2.0	8" S.S.	756.0	755.2	4.4	
4	235	Belfast	113+83	763.1	763.2	762.1	0.5" P	758.6	4.5	4.6	3.5					
4	702	Everest	201+92	764.5	763.9	762.8	0.5" P	760.0	4.5	3.9	2.8					

Page 8 of 9

CS4 Item #	Location: Address	Location: Location # / Street Name	Station Marker	Grade Elevations: Existing Grade	Grade Elevations: Proposed Final Grade	Grade Elevations: Estimated Subgrade	Gas Requirements: Gas Pipe Size	Gas Requirements: Planned Gas T.O.P. Elevation	Planned Depth of Gas: From Existing Grade	Planned Depth of Gas: From Final Grade	Planned Depth of Gas: From Estimated Subgrade	Potential Conflicting Facility: Proposed Facility Description	Potential Conflicting Facility: Top Elevation	Potential Conflicting Facility: Bottom Elevation	Clearance: Above Prop. Facility	Clearance: Below Prop. Facility
	17	Ridgecrest	300+73	768.3	768.3	767.2	4.0" P	762.3	6.0	6.0	4.9	24" RCP	766.8	764.3		2.0
	18	Ridgecrest	24+73	672.0	761.4	760.3	4.0" P	759.0	-87.0	2.4	1.3	36" RCP		761.0		2.0
	19	Ridgecrest	303+85	772.5	773.0	771.9	4.0" P	764.8	7.7	8.1	7.0	24" RCP	769.3	766.8		2.0
	20	Ridgecrest	304+11	772.3	772.3	771.2	4.0" P	766.2	6.1	6.1	5.0	24" RCP	770.7	768.2		2.0
3	726	Everest	301+22	768.9	768.8	767.7	1.0" P	764.4	4.5	4.5	3.4					
3	112	Ridgecrest	302+16	770.0	769.6	768.5	1.0" P	765.5	4.5	4.1	3.0					
3	118	Ridgecrest	302+86	771.5	771.7	770.6	1.0" P	767.0	4.5	4.8	3.6					
3	122	Ridgecrest	303+32	770.8	770.5	769.4	1.0" P	766.3	4.5	4.3	3.2					
4	130	Ridgecrest	3+04	771.9	772.0	770.9	1.0" P	767.4	4.5	4.6	3.5					
4	234	Colton	600+50	768.0	768.0	766.9	2.0" P	764.9	3.1	3.1	2.0	8" S.S.	758.0	757.2	6.7	

Page 9 of 9

CS4 Item #	Location: Address	Location: Location # / Street Name	Station Marker	Grade Elevations: Existing Grade	Grade Elevations: Proposed Final Grade	Grade Elevations: Estimated Subgrade	Gas Requirements: Gas Pipe Size	Gas Requirements: Planned Gas T.O.P. Elevation	Planned Depth of Gas: From Existing Grade	Planned Depth of Gas: From Final Grade	Planned Depth of Gas: From Estimated Subgrade	Potential Conflicting Facility: Proposed Facility Description	Potential Conflicting Facility: Top Elevation	Potential Conflicting Facility: Bottom Elevation	Clearance: Above Prop. Facility	Clearance: Below Prop. Facility
3	8103	Janda Susan	400+27	770.2	770.0	768.9	0.5" P	765.5	4.7	4.5	3.4	8" S.S.	768.3	767.5		2.0
4	8106	Janda Susan	400+53	772.0	772.1	771.0	0.5" P	767.5	4.5	4.6	3.5					
4	8107	Janda Susan	400+59	771.9	770.0	768.9	0.5" P	765.4	6.5	4.6	3.5	8" S.S.	768.2	767.4		2.0
4	8110	Janda Susan	401+68	770.9	771.0	769.9	0.5" P	766.4	4.5	4.6	3.5					

NOTE: Clearance of proposed facilities represents the distance (feet) between the outside diameter of the gas line and the outside edge of the proposed buried utility. All dimensions are in feet.

9-9-14

STATE OF TEXAS
KYLE DAVID MARG
101167
LICENSED
PROFESSIONAL ENGINEER

No.	Drawing Revision	Date
0	Planning Completed	8-01-14

Checked By: KDM Date Approved 9-9-14

Approved By: [signature] Date Approved 9/9/14

Designed By: Ext. 8862 David McCord

Map Quadrant 167 - 610 2135383 13733450

Project No. G-0272

Job Title Belfast - Janda Susan Area Drainage

CPS ENERGY
P.O. BOX 1771
SAN ANTONIO, TX 78296

Job No. 1850692

All proposed gas mains and services are to be installed at the planned Gas Top of Pipe Elevation indicated on the Location Data Table.

Contract Exhibit Gas-6

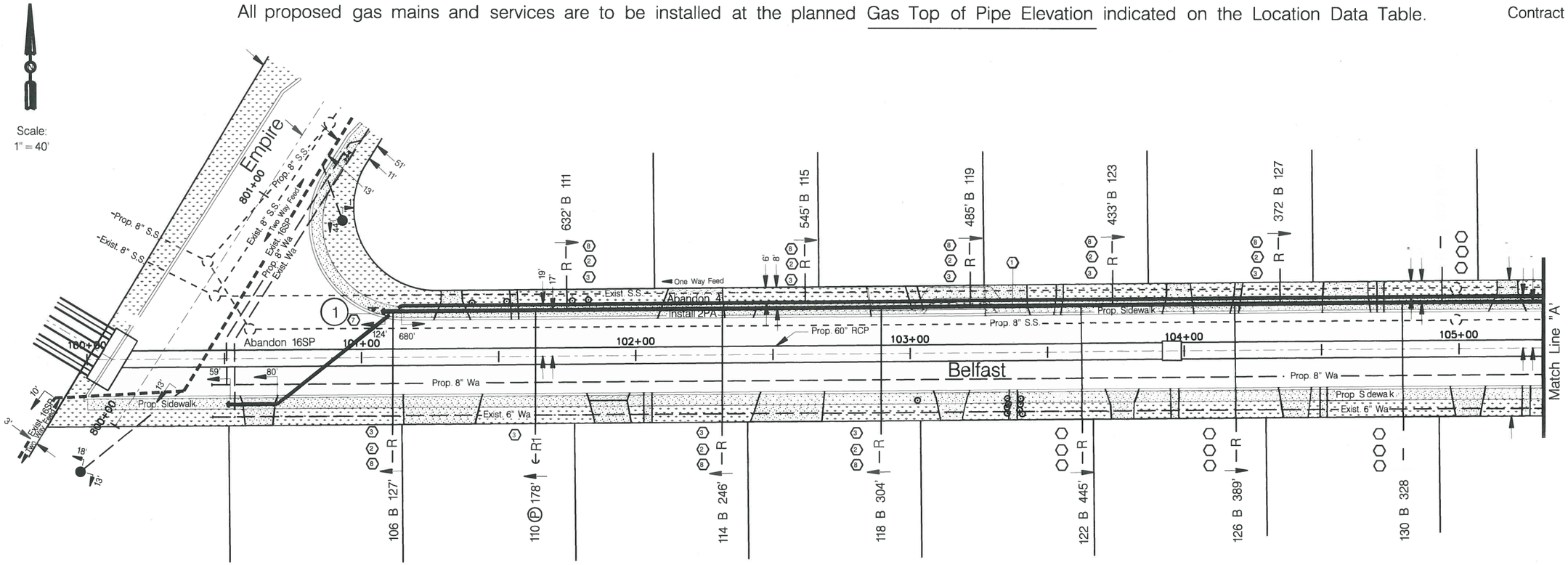

Item	Materials Description	Manufacturer	Quantity	Stock #
1	Pipe Plastic 2" IPS SDR 11 Coil		1654 FT	1013959
2	Pipe Plastic 1/2" IPS SDR 11 Coil		738 FT	1014021
3	Tee Tapping 2"X1/2" IPS Butt Fuse		13 Ea	1016308
4	Tee Tapping 2"X1" IPS Butt Fuse		0 Ea	1016109
5	Fitting Shortstop Welding 3-way Tee 4"		0 Ea	1018480
6	Fitting Transition 4" Stl to Plas.		0 Ea	1016106
7	Cap PE Butt Fuse 2"		1 Ea	1015673
8	Riser Gas Anodeless 1X1/2X36VX36H		12 Ea	1023027
9	Elbow PE 90 Deg 2" Butt Fuse		0 Ea	1015679
10	Elbow PE 45 Deg 4" Butt Fuse		0 Ea	1015675
11	Elbow PE 90 Deg 4" Butt Fuse		0 Ea	1015800
12	Tee Tapping 4"X1" IPS Butt Fuse		0 Ea	1016170
13	4x2 Reducer		0 Ea	1015809
14	Tee Tapping 4"X1/2" IPS Butt Fuse		0 Ea	1016171
15	Cap Welded 4"		0 Ea	1016607
16	Tee PE Pipe 4" Butt Fuse		0 Ea	1015805
17	Cap PE Pipe 4" Butt Fuse		0 Ea	1015674
18	Pipe Plastic 4" IPS SDR 11 Coil		900 FT	1014022

Base Bid

9-9-14

STATE OF TEXAS
KYLE DAVID MARG
101167
LICENSED
PROFESSIONAL ENGINEER

No.	Drawing Revision	Date
0	Planning Completed	8-01-14

Checked By: KDM — Date Approved: 9-9-14

Approved By: [signature] — Date Approved: 9/9/14

Designed By: Ext. 8862 David McCord

Map Quadrant: 167 - 610 2135383 13733450

Project No.: G-0272

Job Title: Belfast - Janda Susan Area Drainage

CPS ENERGY
P.O. BOX 1771
SAN ANTONIO, TX 78296

Job No.: 1850692

All proposed gas mains and services are to be installed at the planned Gas Top of Pipe Elevation indicated on the Location Data Table.

Contract Exhibit Gas-6

Scale: 1" = 40'

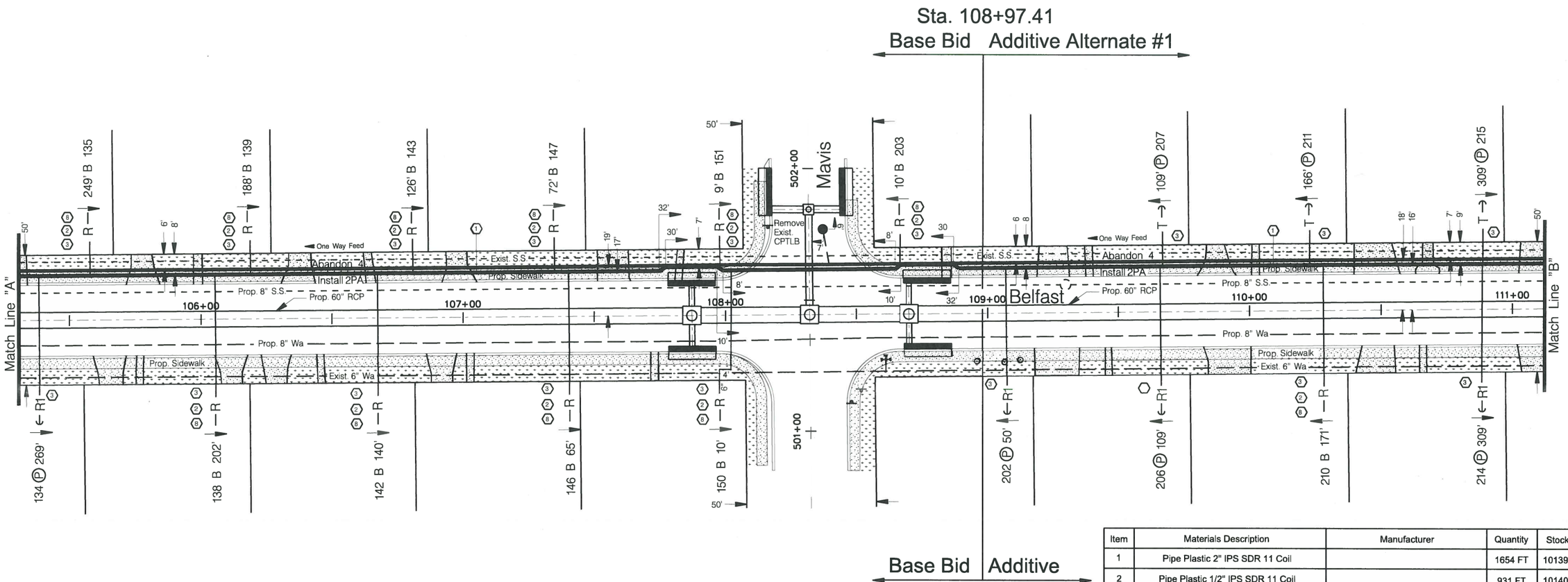

Item	Materials Description	Manufacturer	Quantity	Stock #
1	Pipe Plastic 2" IPS SDR 11 Coil		1654 FT	1013959
2	Pipe Plastic 1/2" IPS SDR 11 Coil		931 FT	1014021
3	Tee Tapping 2"X1/2" IPS Butt Fuse		18 Ea	1016308
4	Tee Tapping 2"X1" IPS Butt Fuse		0 Ea	1016109
5	Fitting Shortstop Welding 3-way Tee 4"		0 Ea	1018480
6	Fitting Transition 4" Stl to Plas.		0 Ea	1016106
7	Cap PE Butt Fuse 2"		0 Ea	1015673
8	Riser Gas Anodeless 1X1/2X36VX36H		11 Ea	1023027
9	Elbow PE 90 Deg 2" Butt Fuse		0 Ea	1015679
10	Elbow PE 45 Deg 4" Butt Fuse		0 Ea	1015675
11	Elbow PE 90 Deg 4" Butt Fuse		0 Ea	1015800
12	Tee Tapping 4"X1" IPS Butt Fuse		0 Ea	1016170
13	4x2 Reducer		0 Ea	1015809
14	Tee Tapping 4"X1/2" IPS Butt Fuse		0 Ea	1016171
15	Cap Welded 4"		0 Ea	1016607
16	Tee PE Pipe 4" Butt Fuse		0 Ea	1015805
17	Cap PE Pipe 4" Butt Fuse		0 Ea	1015674
18	Pipe Plastic 4" IPS SDR 11 Coil		900 FT	1014022

9-9-14
STATE OF TEXAS
KYLE DAVID MARG
101167
LICENSED
PROFESSIONAL ENGINEER

No.	Drawing Revision	Date
0	Planning Completed	

Checked By: KDM Date Approved: 9-9-14
Approved By: [signature] Date Approved: 9/9/14
Designed By: Ext. 8862 David McCord
Map Quadrant: 167 - 610 2135383 13733450
Project No.: G-0272
Job Title: Belfast - Janda Susan Area Drainage
CPS ENERGY
P.O. BOX 1771
SAN ANTONIO, TX 78296
Job No.: 1850692

All proposed gas mains and services are to be installed at the planned Gas Top of Pipe Elevation indicated on the Location Data Table.

Contract Exhibit Gas-6

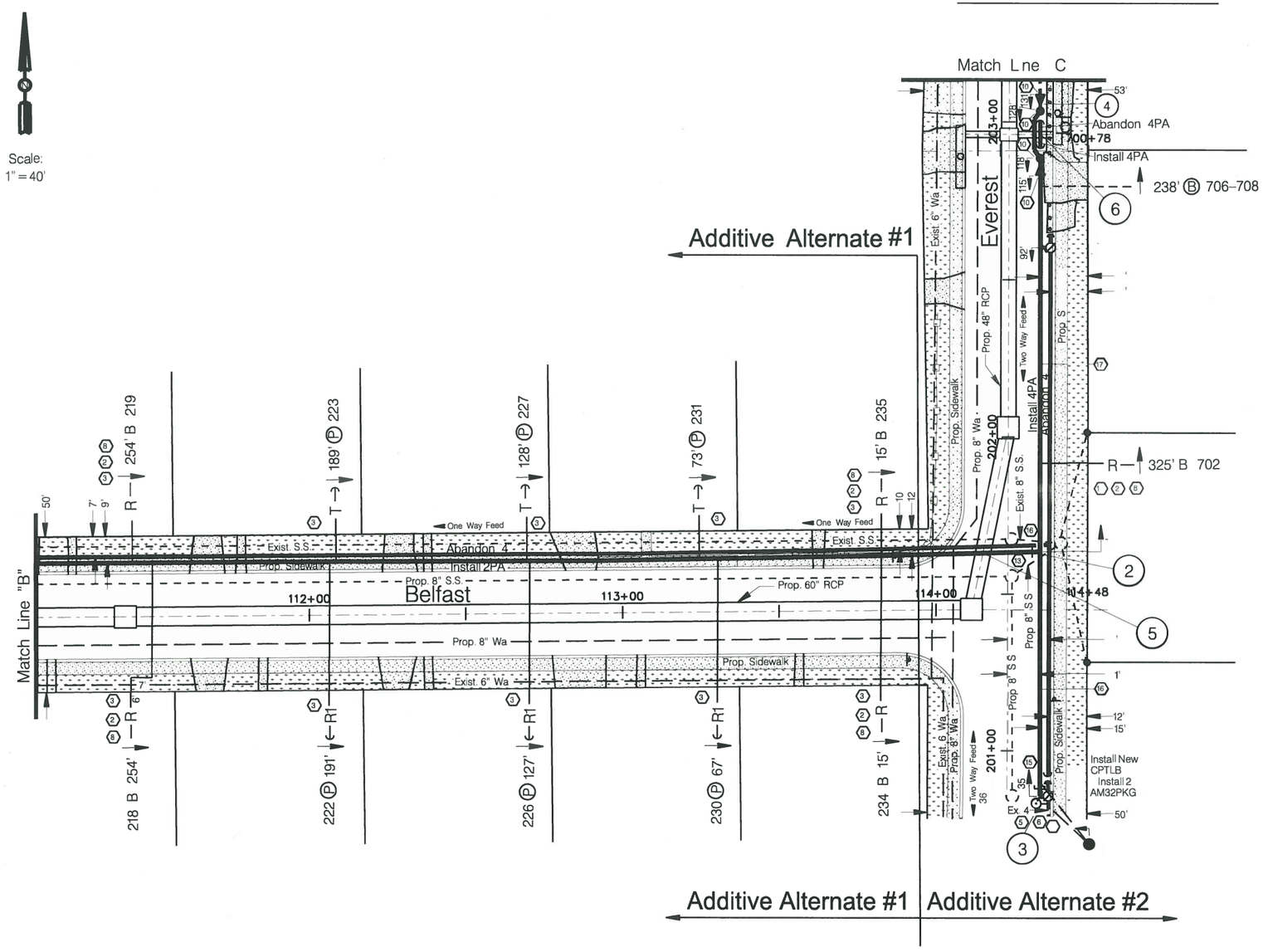

Item	Materials Description	Manufacturer	Quantity	Stock #
1	Pipe Plastic 2" IPS SDR 11 Coil		1654 FT	1013959
2	Pipe Plastic 1/2" IPS SDR 11 Coil		478 FT	1014021
3	Tee Tapping 2"X1/2" IPS Butt Fuse		10 Ea	1016308
4	Tee Tapping 2"X1" IPS Butt Fuse		0 Ea	1016109
5	Fitting Shortstop Welding 3-way Tee 4"		1 Ea	1018480
6	Fitting Transition 4" Stl to Plas.		1 Ea	1016106
7	Cap PE Butt Fuse 2"		0 Ea	1015673
8	Riser Gas Anodeless 1X1/2X36VX36H		5 Ea	1023027
9	Elbow PE 90 Deg 2" Butt Fuse		0 Ea	1015679
10	Elbow PE 45 Deg 4" Butt Fuse		4 Ea	1015675
11	Elbow PE 90 Deg 4" Butt Fuse		1 Ea	1015800
12	Tee Tapping 4"X1" IPS Butt Fuse		0 Ea	1016170
13	4x2 Reducer		1 Ea	1015809
14	Tee Tapping 4"X1/2" IPS Butt Fuse		1 Ea	1016171
15	Cap Welded 4"		1 Ea	1016607
16	Tee PE Pipe 4" Butt Fuse		1 Ea	1015805
17	Cap PE Pipe 4" Butt Fuse		1 Ea	1015674
18	Pipe Plastic 4" IPS SDR 11 Coil		900 FT	1014022

9-9-14
STATE OF TEXAS
KYLE DAVID MARG
101167
LICENSED
PROFESSIONAL ENGINEER

No.	Drawing Revision	Date
0	Planning Completed	8-01-14

Checked By: KDM — Date Approved: 9-9-14
Approved By: [signature] — Date Approved: 9/9/14
Designed By: Ext. 8862 David McCord
Map Quadrant: 167 - 610 2135383 13733450
Project No.: G-0272
Job Title: Belfast - Janda Susan Area Drainage
CPS ENERGY
P.O. BOX 1771
SAN ANTONIO, TX 78296
Job No.: 1850692

All proposed gas mains and services are to be installed at the planned Gas Top of Pipe Elevation indicated on the Location Data Table.

Contract Exhibit Gas-6

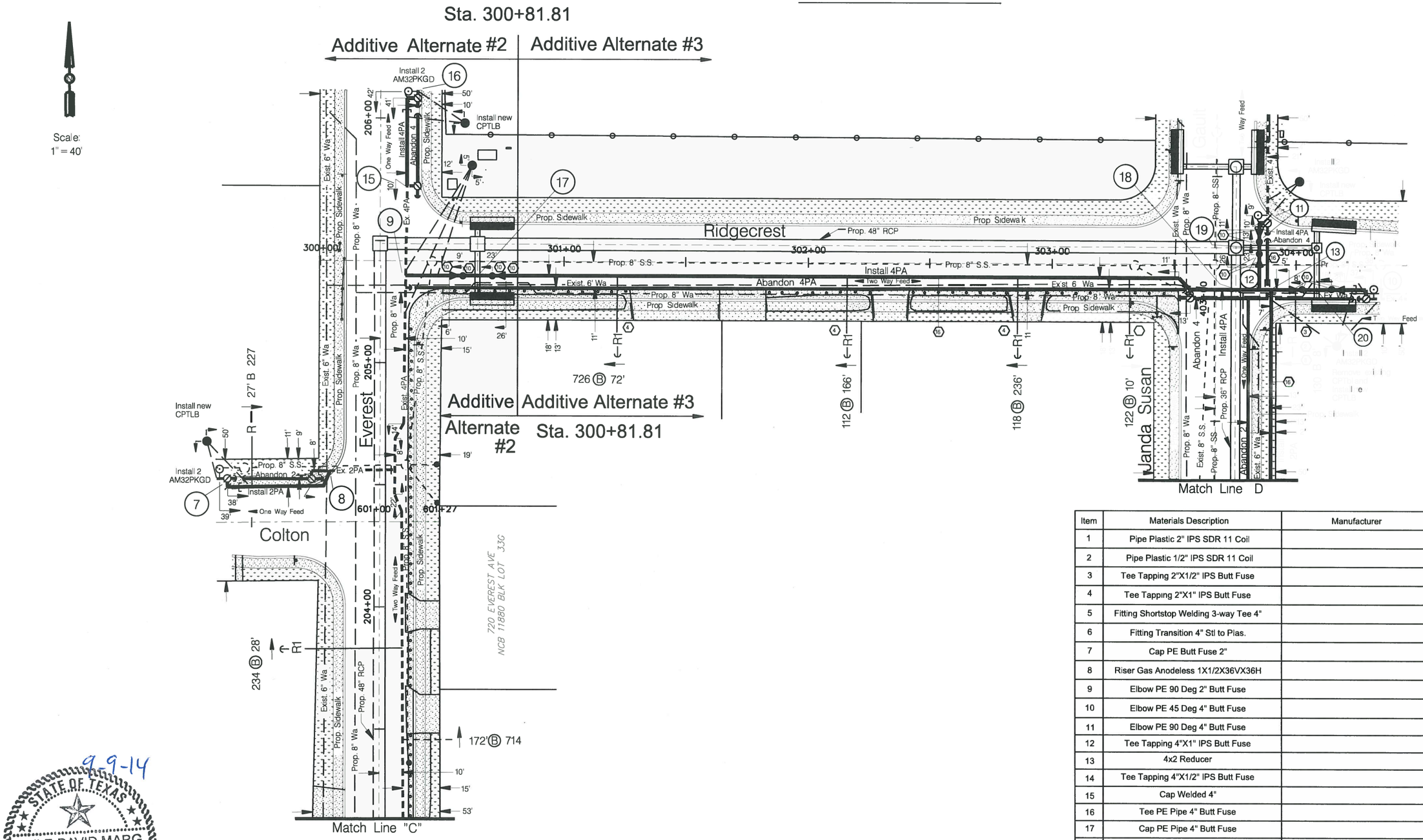

Item	Materials Description	Manufacturer	Quantity	Stock #
1	Pipe Plastic 2" IPS SDR 11 Coil		1654 FT	1013959
2	Pipe Plastic 1/2" IPS SDR 11 Coil		92FT	1014021
3	Tee Tapping 2"X1/2" IPS Butt Fuse		1 Ea	1016308
4	Tee Tapping 2"X1" IPS Butt Fuse		0 Ea	1016109
5	Fitting Shortstop Welding 3-way Tee 4"		2 Ea	1018480
6	Fitting Transition 4" Stl to Plas.		2 Ea	1016106
7	Cap PE Butt Fuse 2"		0 Ea	1015673
8	Riser Gas Anodeless 1X1/2X36VX36H		1 Ea	1023027
9	Elbow PE 90 Deg 2" Butt Fuse		0 Ea	1015679
10	Elbow PE 45 Deg 4" Butt Fuse		14 Ea	1015675
11	Elbow PE 90 Deg 4" Butt Fuse		2 Ea	1015800
12	Tee Tapping 4"X1" IPS Butt Fuse		4 Ea	1016170
13	4x2 Reducer		1 Ea	1015809
14	Tee Tapping 4"X1/2" IPS Butt Fuse		1 Ea	1016171
15	Cap Welded 4"		2 Ea	1016607
16	Tee PE Pipe 4" Butt Fuse		3 Ea	1015805
17	Cap PE Pipe 4" Butt Fuse		0 Ea	1015676
18	Pipe Plastic 4" IPS SDR 11 Coil		900 FT	1014022

9-9-14
STATE OF TEXAS
KYLE DAVID MARG
101167
LICENSED
PROFESSIONAL ENGINEER

No.	Drawing Revision	Date
0	Planning Completed	8-01-14

Checked By: KDM — Date Approved: 9-9-14
Approved By: [signature] — Date Approved: 9/9/14
Designed By: Ext. 8862 David McCord
Map Quadrant: 167 - 610 2135383 13733450
Project No.: G-0272
Job Title: Belfast - Janda Susan Area Drainage
CPS ENERGY
P.O. BOX 1771
SAN ANTONIO, TX 78296
Job No.: 1850692

All proposed gas mains and services are to be installed at the planned Gas Top of Pipe Elevation indicated on the Location Data Table.

Contract Exhibit Gas-6

Scale:
1" = 40'

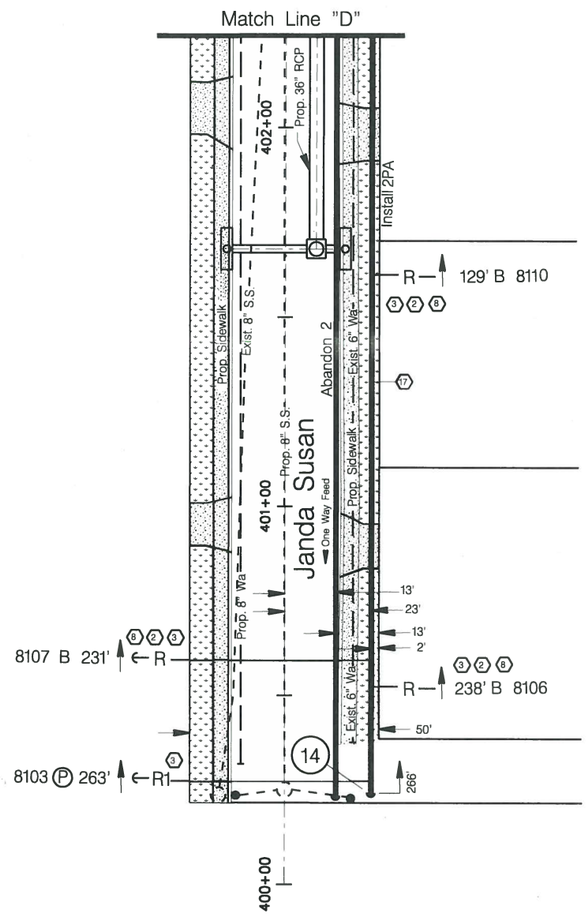

Additive Alternate #3

Item	Materials Description	Manufacturer	Quantity	Stock #
1	Pipe Plastic 2" IPS SDR 11 Coil		11654 FT	1013959
2	Pipe Plastic 1/2" IPS SDR 11 Coil		145 FT	1014021
3	Tee Tapping 2"X1/2" IPS Butt Fuse		0 Ea	1016308
4	Tee Tapping 2"X1" IPS Butt Fuse		0 Ea	1016109
5	Fitting Shortstop Welding 3-way Tee 4"		0 Ea	1018480
6	Fitting Transition 4" Stl to Plas.		0 Ea	1016106
7	Cap PE Butt Fuse 2"		0 Ea	1015673
8	Riser Gas Anodeless 1X1/2X36VX36H		3 Ea	1023027
9	Elbow PE 90 Deg 2" Butt Fuse		0 Ea	1015679
10	Elbow PE 45 Deg 4" Butt Fuse		0 Ea	1015675
11	Elbow PE 90 Deg 4" Butt Fuse		0 Ea	1015800
12	Tee Tapping 4"X1" IPS Butt Fuse		0 Ea	1016170
13	4x2 Reducer		0 Ea	1015809
14	Tee Tapping 4"X1/2" IPS Butt Fuse		4 Ea	1016171
15	Cap Welded 4"		0 Ea	1016607
16	Tee PE Pipe 4" Butt Fuse		0 Ea	1015805
17	Cap PE Butt Fuse 4"		1 Ea	1015674
18	Pipe Plastic 4" IPS SDR 11 Coil		900 FT	1014022

9-9-14
STATE OF TEXAS
KYLE DAVID MARG
101167
LICENSED
PROFESSIONAL ENGINEER

No.	Drawing Revision	Date
0	Planning Completed	8-01-14

Checked By: KDM Date Approved 9-9-14
Approved By: [signature] Date Approved 9/9/14
Designed By: Ext. 8862 David McCord
Map Quadrant 167 - 610 2135383 13733450
Project No. G-0272
Job Title Belfast - Janda Susan Area Drainage
CPS ENERGY
P.O. BOX 1771
SAN ANTONIO, TX 78296
Job No. 1850692

CITY OF SAN ANTONIO
TRANSPORTATION & CAPITAL IMPROVEMENTS

Note: Addenda Acknowledgement Form for Addendum 3 is attached herein. This form must be signed and submitted with the bid package.

RECEIPT OF ADDENDUM NUMBER(S) **3** IS HEREBY ACKNOWLEDGED FOR PLANS AND

SPECIFICATIONS FOR CONSTRUCTION OF **BELFAST & JANDA SUSAN AREA DRAINAGE – 40-00324**

FOR WHICH BIDS WILL BE OPENED ON **TUESDAY, MAY 5, 2015 AT 2:00 P.M.**

THIS ACKNOWLEDGEMENT MUST BE SIGNED AND RETURNED WITH THE BID PACKAGE.

Company Name: _____

Address: _____

City/State/Zip Code: _____

Date: _____

_____
Signature

_____
Print Name/Title