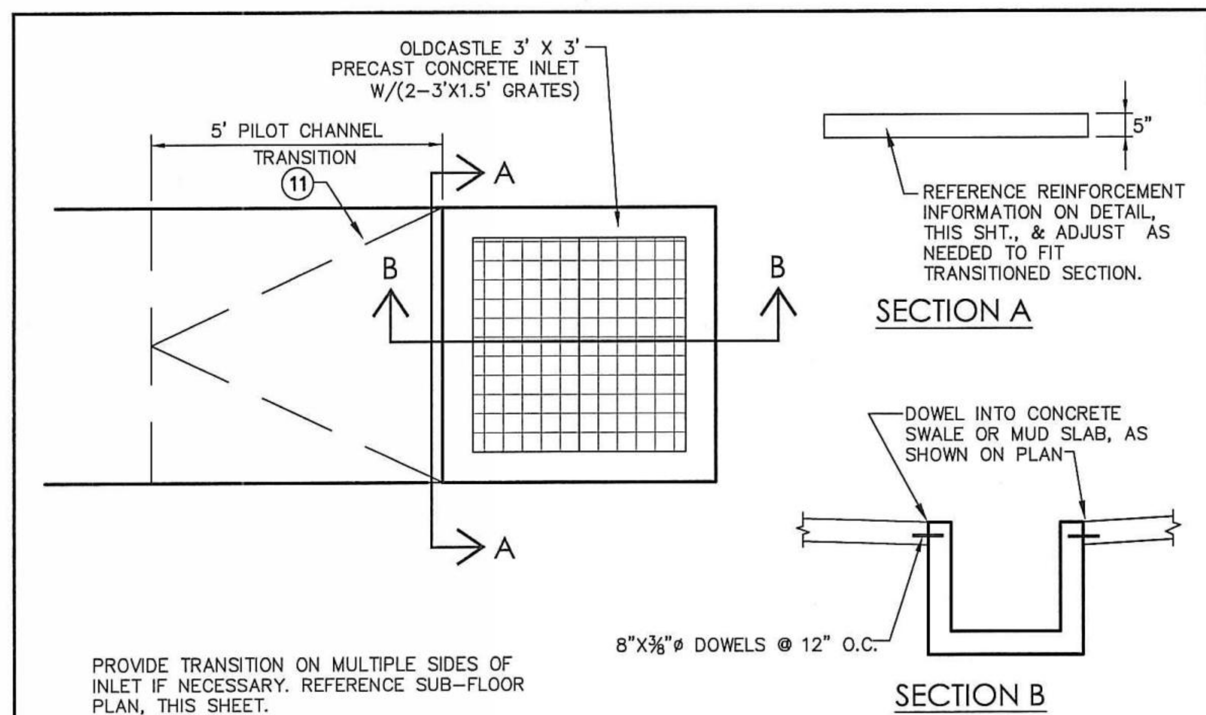

PROVIDE TRANSITION ON MULTIPLE SIDES OF INLET IF NECESSARY. REFERENCE SUB-FLOOR PLAN, THIS SHEET.

1 SUBFLOOR WET WELL DETAIL

CONTRACTOR IS TO PROVIDE A 3" CONCRETE MUD SLAB OVER A "VAPORBLOCK" 15 MIL. POLYETHLENE LINER ON FINISH GRADE FOR ENTIRE SUBFLOOR AREA UNDER BUILDING THAT IS NOT SHOWN ON THE DRAWING TO BE REINFORCED CONCRETE. REFERENCE FOLLOWING DETAIL:

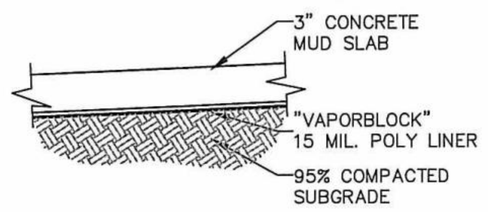

CONCRETE:
2500 PSI CONCRETE WITH FIBER REINFORCEMENT (BASF – MASTERFIBER F100, OR APPROVED EQUAL)

POLYLINER:
"VAPORBLOCK" 15 MIL. UNDERSLAB VAPOR RETARDER OR APPROVED EQUAL.
SUPPLIER: GLOBAL PLASTIC SHEETING
PH: (760)597–9298
(866)597–9298
FAX: (760)597–9574

2 SUBFLOOR MUDSLAB SECTION

SCALE: NONE

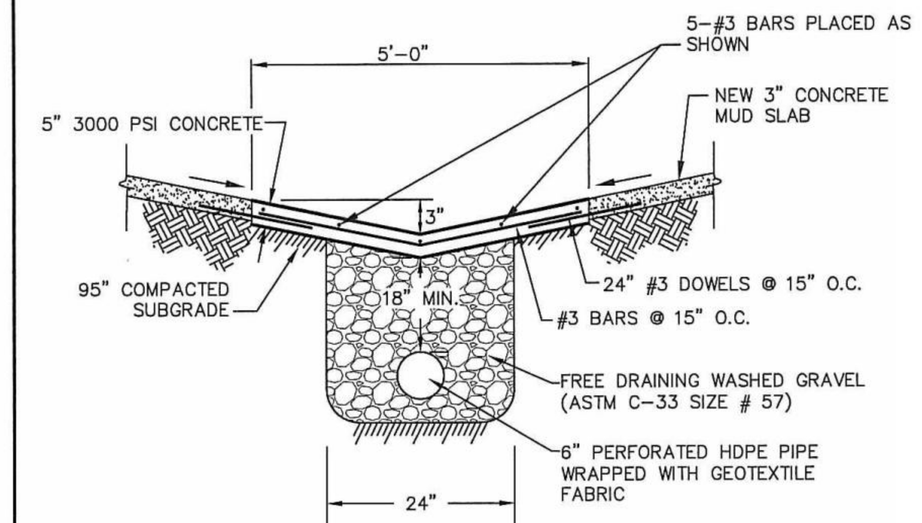

3 CONCRETE PILOT CHANNEL IN MUD SLAB

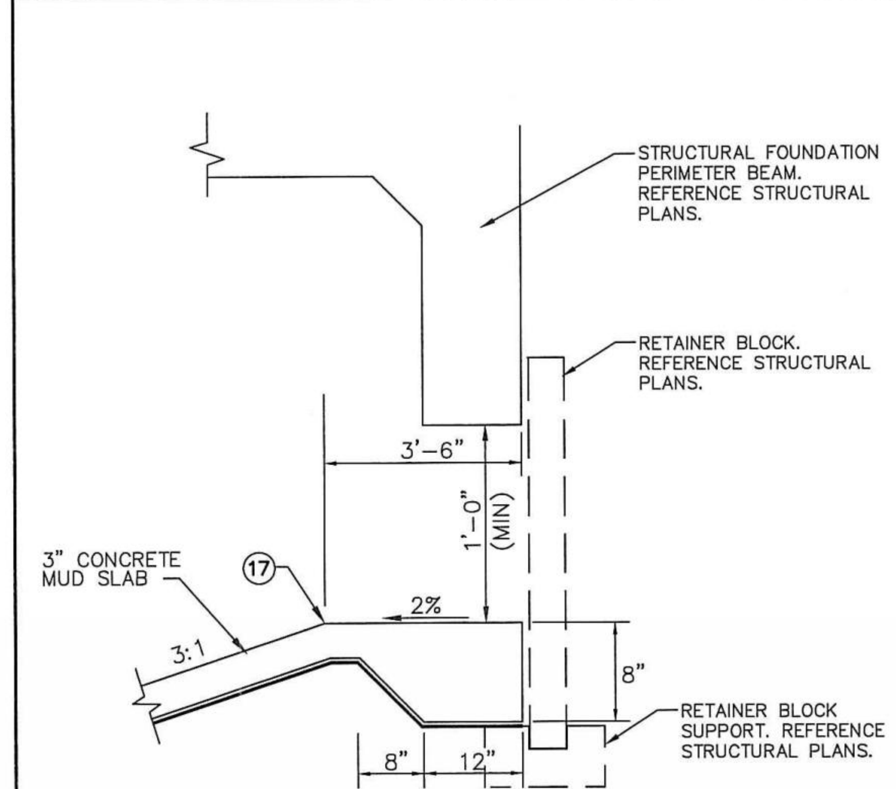

4 MUD SLAB EDGE DETAIL

SCALE: NONE

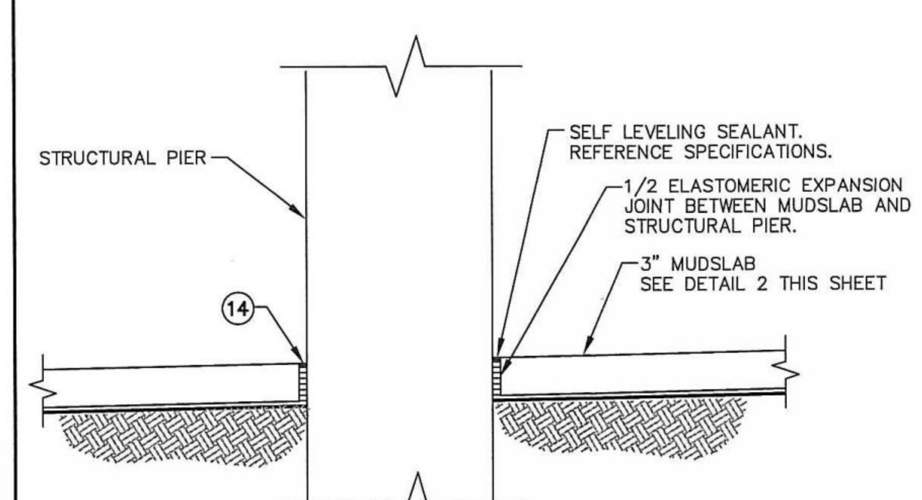

5 EXPANSION JOINT AT PIERS/MUDSLAB

SCALE: NONE

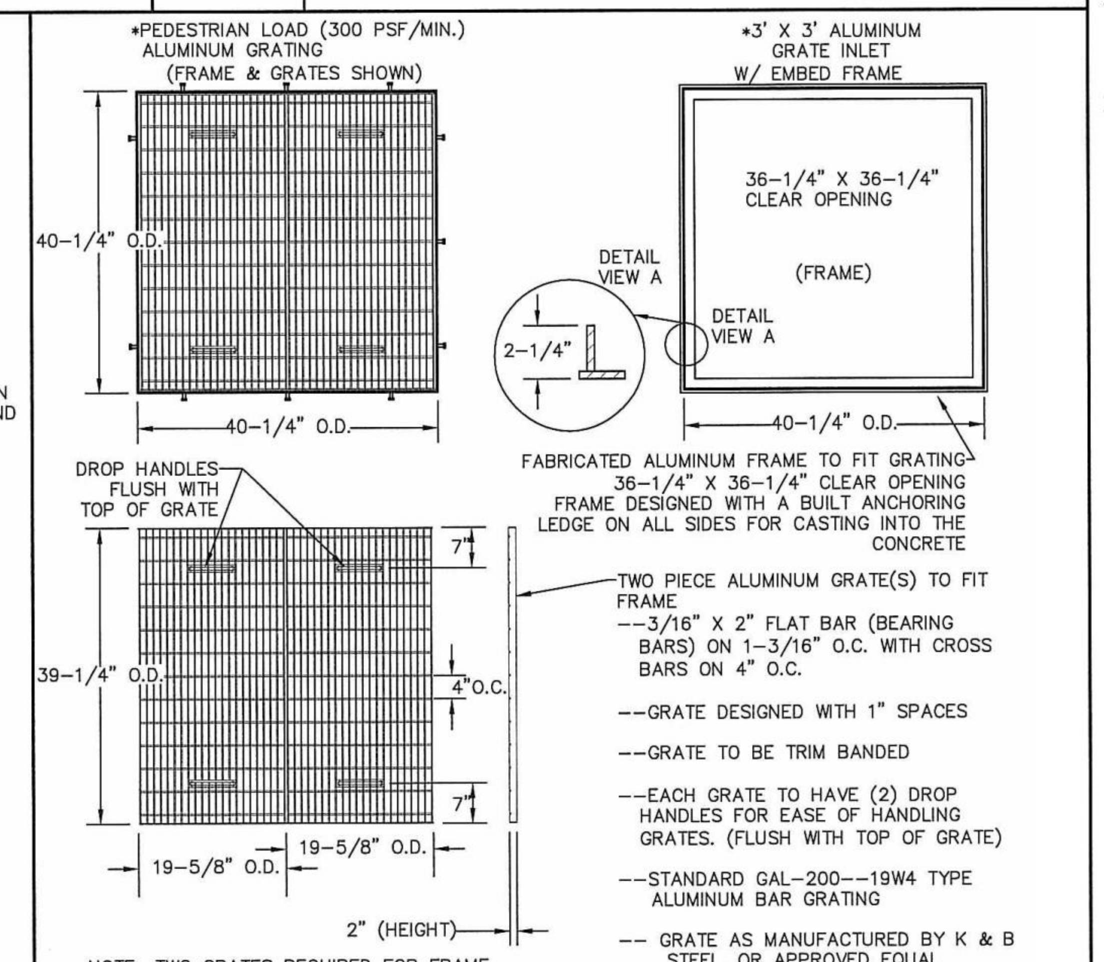

TWO PIECE ALUMINUM GRATE(S) TO FIT FRAME
- -3/16" X 2" FLAT BAR (BEARING BARS) ON 1-3/16" O.C. WITH CROSS BARS ON 4" O.C.
- -GRATE DESIGNED WITH 1" SPACES
- -GRATE TO BE TRIM BANDED
- -EACH GRATE TO HAVE (2) DROP HANDLES FOR EASE OF HANDLING GRATES. (FLUSH WITH TOP OF GRATE)
- -STANDARD GAL-200--19W4 TYPE ALUMINUM BAR GRATING
- -GRATE AS MANUFACTURED BY K & B STEEL, OR APPROVED EQUAL

NOTE: TWO GRATES REQUIRED FOR FRAME

6 3'x3' FRAME & GRATES DETAIL

SCALE: NONE

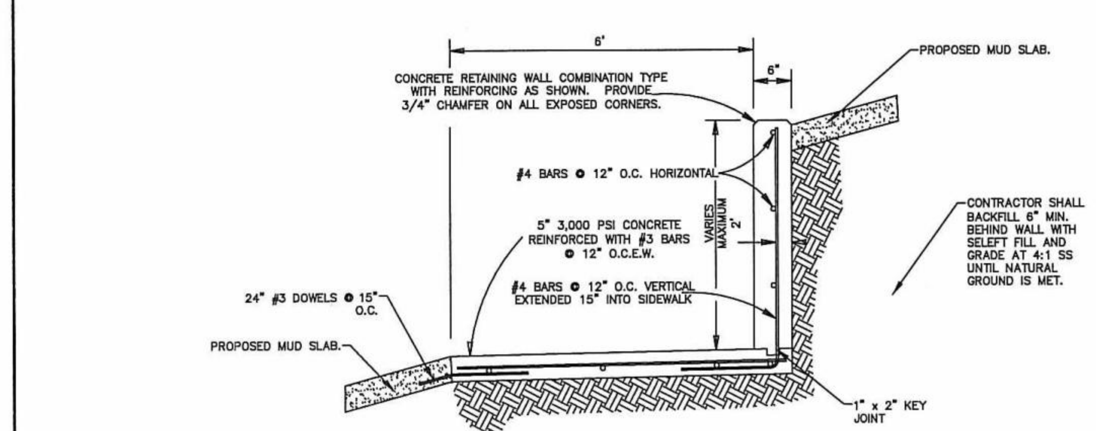

7 COMBINATION SIDEWALK/RETAINING WALL

SCALE: NONE

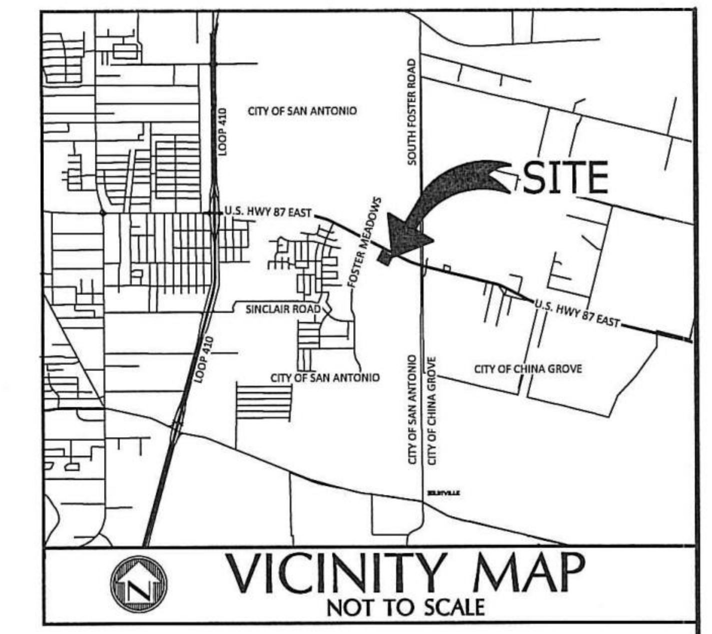

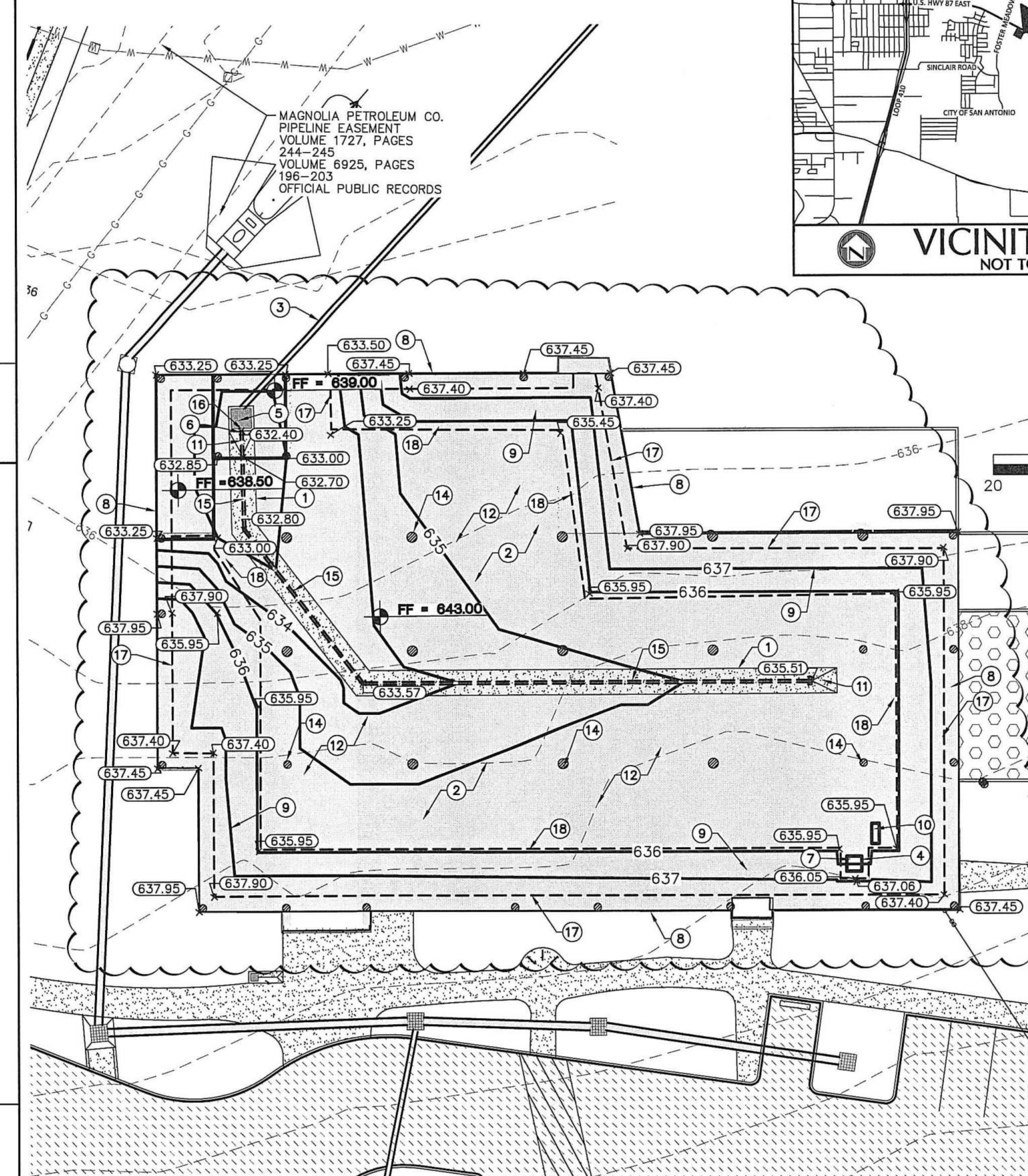

PLAN VIEW

TRENCH EXCAVATION SAFETY PROTECTION:

CONTRACTOR AND/OR CONTRACTOR'S INDEPENDENTLY RETAINED EMPLOYEE OR STRUCTURAL DESIGN/GEOTECHNICAL/SAFETY/EQUIPMENT CONSULTANT SHALL REVIEW THESE PLANS AND AVAILABLE GEOTECHNICAL INFORMATION AND THE ANTICIPATED INSTALLATION SITE(S) WITHIN THE PROJECT WORK AREA IN ORDER TO IMPLEMENT CONTRACTOR'S TRENCH EXCAVATION SAFETY PROTECTION SYSTEMS, PROGRAMS AND/OR PROCEDURES FOR THE PROJECT DESCRIBED IN THE CONTRACT DOCUMENTS. THE CONTRACTOR'S IMPLEMENTATION OF THESE SYSTEMS, PROGRAMS, AND/OR PROCEDURES SHALL PROVIDE ADEQUATE TRENCH EXCAVATION SAFETY PROTECTION THAT COMPLY WITH AS A MINIMUM, CURRENT OSHA STANDARDS FOR TRENCH EXCAVATIONS. SPECIFICALLY, CONTRACTOR AND/OR CONTRACTOR'S INDEPENDENTLY RETAINED EMPLOYEE OR SAFETY CONSULTANT SHALL IMPLEMENT A TRENCH SAFETY PROGRAM IN ACCORDANCE WITH CURRENT OSHA STANDARDS GOVERNING THE PRESENCE AND ACTIVITIES OF INDIVIDUALS WORKING IN AND AROUND TRENCH EXCAVATION.

LEGEND

(hatch)	NEW LIGHT DUTY FLEXIBLE PAVEMENT	TOP	TOP OF MANHOLE ELEVATION
		TOG	TOP OF GRATE ELEVATION
		TC	TOP OF CURB
(stipple)	NEW CONCRETE FLATWORK	G	GUTTER
		SW	TOP OF SIDEWALK
— — —	PROPERTY LINE	ESM'T	EASEMENT
+ 802.97	EXISTING SPOT ELEVATION	E.G.T.CATV	ELECTRIC, GAS, TELEPHONE & CABLE T.V.
(802.00)+	PROPOSED ELEVATION	R.O.W.	RIGHT OF WAY
		HP	HIGH POINT
— —1004— — —	EXISTING CONTOUR	(symbol)	SIDEWALK RAMP
——1004——	NEW CONTOUR	→	DRAINAGE FLOW ARROW
——◇——	CHAINLINK FENCE	(symbol)	PROPOSED FIRE HYDRANT
——O——	ORNAMENTAL FENCE	(symbol)	PROPOSED TRAFFIC SIGN
· · · → · · · →	FLOW LINE	(symbol)	PROPOSED PIER LOCATION (REF. STRUCTURAL)
— — — — —	GRADE BREAK		
RCP	REINFORCED CONCRETE PIPE		
AS	ALUMINIZED STEEL PIPE		
PVC	POLYVINYL CHLORIDE PIPE		
INV	INVERT ELEVATION OF PIPE		
TW	TOP OF WALL ELEVATION		

SUBFLOOR GRADING KEYNOTES:

1. NEW CONCRETE PILOT CHANNEL. REFERENCE DETAIL NO. 3, THIS SHEET.
2. GRADE AREA @ 2.0% MINIMUM SLOPE FROM BASE OF 3:1 SLOPE TO CONCRETE PILOT CHANNEL AS INDICATED ON PLAN.
3. PROPOSED 12" SDR26 PVC PIPE. REF UTILITY PLAN
4. APPROXIMATE LOCATION OF UNDERFLOOR ACCESS PANEL. REFERENCE ARCHITECTURAL DRAWINGS FOR EXACT LOCATION AND DETAIL.
5. 3' X 3' PRECAST CONCRETE OPEN GRATE INLET (CAPITAL PRECAST, OR APPROVED EQUAL). REFERENCE DETAIL NO. 1, THIS SHEET.
6. CONCRETE CHANNEL TO MATCH PRECAST CONCRETE INLET. PROVIDE 8"X⅜"ø DOWELS @ 12" O.C. AT JUNCTURE.
7. PROVIDE 6' X 6' CONCRETE SLAB BELOW ACCESS PANELS AS SHOWN. REFERENCE TYPICAL SIDEWALK SECTION AND DETAIL 7, THIS SHEET. CONTRACTOR TO PROVIDE GALVANIZED STEEL LADDER WELDED ONTO FLOOR HATCH FRAME AND BOLTED ONTO CONCRETE SLAB FOR ACCESS TO SUBFLOOR AREA.
8. CONTRACTOR TO PROVIDE THICKENED EDGE AT MUD SLAB. REFERENCE DETAIL NO. 4, THIS SHEET.
9. SLOPE @ 3:1 MAX. AS SHOWN.
10. AREAWAY VENT BOX IN CONCRETE SLAB. TOP OF BOX IS TO BE 4" ABOVE FINISH GRADE. REFERENCE STRUCTURAL PLANS FOR BOX DETAILS AND MECHANICAL PLANS FOR VENTILATION DETAILS
11. 5' TRANSITION FROM V-CHANNEL SECTION TO FLAT SECTION TO MATCH PRECAST CONCRETE GRATE INLET.
12. NEW 3" CONCRETE MUD SLAB OVER ENTIRE SUBFLOOR AREA. REFERENCE SECTION DETAIL NO. 2, THIS SHEET.
13. PIPE TO DISCHARGE INTO LANDSCAPE. CONTRACTOR TO PROVIDE CONCRETE END TREATMENT. REFERENCE UTILITY PLANS.
14. REINFORCED CONCRETE PIER (TYP.) REFERENCE STRUCTURAL PLANS FOR LOCATION, SIZE, AND DETAILS. PROVIDE ½" EXPANSION JOINT BETWEEN MUD SLAB AND PIER. REFERENCE DETAIL NO. 5, THIS SHEET.
15. NEW 6" PERFORATED HDPE PIPE UNDER CONCRETE DRAINAGE SWALE. PROVIDE BENDS, CAPS, AND FITTINGS AS REQUIRED FOR PROPOSED CONSTRUCTION.
16. TIE NEW 6" PERFORATED HDPE PIPE INTO GRATE INLET AT INVERT SHOWN ON PLAN.
17. MUDSLAB TOP OF SLOPE
18. MUDSLAB TOE OF SLOPE

UNDERFLOOR NOTES:

1. GENERAL CONTRACTOR SHALL CHECK AND VERIFY ALL DIMENSIONS AND GRADE CONDITIONS (BOTH NEW AND EXISTING). HE SHALL REPORT ANY DISCREPANCIES TO THE CONSTRUCTION MANAGER BEFORE PROCEEDING WITH ANY PHASE OF THE WORK AS HE WILL BE RESPONSIBLE FOR ALL WORK INTENDED BY THE DRAWING.
2. CONTRACTOR AGREES THAT HE SHALL ASSUME SOLE RESPONSIBILITY FOR JOB SITE CONDITIONS DURING THE CONSTRUCTION OF THE PROJECT DRAINAGE UTILITIES INCLUDING SAFETY OF ALL PERSONS AND PROPERTY.
3. ALL EXCAVATION MATERIAL IS UNCLASSIFIED. THE EXISTING SOIL INFORMATION CAN BE FURNISHED BY THE PROJECT ARCHITECT AND IS FOR THE CONTRACTORS INFORMATION ONLY AND IN NO WAY GUARANTEES THE TYPES OR QUANTITIES THAT WILL BE ENCOUNTERED.
4. CONTRACTOR SHALL COMPLY WITH CITY OF SAN ANTONIO BUILDING CODE AND REGULATIONS, AS WELL AS OTHER CODES AND INSPECTION PROVISIONS APPLICABLE TO THIS PROJECT.
5. CONTRACTOR IS REQUIRED TO VERIFY PROJECT ELEVATIONS. "MATCH EXISTING" SHALL BE UNDERSTOOD TO SIGNIFY VERTICAL AND HORIZONTAL ALIGNMENT AND QUALITY OF MATERIALS AND WORKMANSHIP.
6. NEW UNDERGROUND UTILITIES THAT ARE INSTALLED PRIOR TO FINAL GRADING OF THE SITE MUST MAINTAIN THE MINIMUM PIPE COVER AS SHOWN ON THE DETAILS. THE GENERAL CONTRACTOR WILL BE RESPONSIBLE FOR PROTECTING THESE PIPES FROM POSSIBLE DAMAGE BY CONSTRUCTION EQUIPMENT, TRUCKS, OR OTHER TRAFFIC.
7. ALL PIPING SHOWN UNDER BUILDING IS TO BE SDR26 PVC. CONTRACTOR IS TO PLACE AS SHOWN TO AVOID CONCRETE PIER LOCATIONS.
8. TOP OF AREAWAY VENT BOX IN GRASS AND PAVED AREAS IS TO BE 8" ABOVE FINISH GRADE.
9. CONTRACTOR SHALL BE RESPONSIBLE FOR REMOVING WATER FROM ALL EXCAVATIONS AND UNDERFLOOR AREAS IMMEDIATELY FOLLOWING RAIN EVENTS THROUGHOUT THE DURATION OF CONSTRUCTION.

GAS NOTE:

REQUIREMENTS FOR CONSTRUCTION NEAR GAS:
AN UNDERGROUND GAS LINE PASSES THROUGH THE SUBJECT SITE. ALL UTILITIES THAT CROSS THIS GAS LINE MUST CROSS AT RIGHT ANGLES TO THE GAS MAIN. SEPARATION DISTANCE BETWEEN UTILITIES AND THE GAS MAIN SHALL BE 4'-0" BETWEEN OUTSIDE DIAMETER TO OUTSIDE DIAMETER. THE CONTRACTOR MUST PROTECT THE GAS LINE AT ALL TIMES DURING CONSTRUCTION.

OCO LPA
p. 210.829.1737
w. ocolpa.com
f. 210.829.1730
e. lpa@lpainc.com
114 East Cevallos Street
San Antonio, Texas 78204

STATE OF TEXAS — RAYMOND TARIN, JR — 87060 — LICENSED PROFESSIONAL ENGINEER
11/24/2014

MTR Moy Tarin Ramirez Engineers, LLC
· Engineers · Surveyors · Planners
FIRM TBPE NO. F-5297
12770 CIMARRON PATH, SUITE 100
SAN ANTONIO, TEXAS 78249
TEL: (210) 698-5051
FAX: (210) 698-5085

DISTRICT 2 BRANCH LIBRARY

U.S. HWY 87, SAN ANTONIO, TEXAS 78222

Developed for
CITY OF SAN ANTONIO

This and all other project documents and all ideas, aesthetics and designs incorporated therein are instruments of service. All project documents are the registered property of LPA, INC. (LPA) and cannot be lawfully used in whole or in part for any project or purpose except as described in the contractual agreement between LPA and Client. LPA hereby gives formal notice that any such project document use, reproduction or modification (misuse) is not only unlawful but automatically binds all parties involved with misuse to fully indemnify and defend LPA and LPA's Consultants to the maximum legal extent against all losses, demands, claims or liabilities arising directly or indirectly from project document misuse.

Project documents describe design intent of work and are not a representation of as-built or existing conditions. LPA and LPA's Consultants make no representations concerning the accuracy of documents and are not responsible for any discrepancies between project documents and the existing conditions.

© Copyright 2014

Submittal	Date	Revision	Date
		1 REVISED PER ARCHITECT'S COMMENTS	11/24/14

Job. No. 13052.01
Date OCTOBER 17, 2014
Checked by
Scale

SUBFLOOR GRADING

C3.1R1

R:\City of San Antonio-New Library D2\Drawings\13052_00_C3.1 SBFLG.dwg

INTERIOR MATERIALS LEGEND

FLOORING

PFT — PORCELAIN TILE
MANUFACTURER: STONEPEAK CERAMICS
STYLE/SIZE: CITY 2.0 / 8" X 48"
COLOR: OLIVE CAST
NOTES: 1/3 RUNNING BOND
GROUT: LATICRETE, SMOKE GREY 89

CPT-1 — MODULAR CARPET PLANKS
MANUFACTURER: INTERFACE
STYLE/SIZE: URBAN RETREAT / UR501 / 25 cm X 1m
COLOR: ASH 103617
NOTES: HERRINGBONE PATTERN

SC — SEALED CONCRETE
REFER TO SPECIFICATIONS

RT — RUBBER TILE
MANUFACTURER: JOHNSONITE
STYLE/SIZE: OLIO / 24" X 24" / HAMMERED
COLOR: CUSTOM USING ONE FIELD COLOR AND UP TO THREE (3) ACCENT COLORS - COORDINATE WITH ARCHITECT
**BASIS OF DESIGN - FIELD: 32 PEBBLE; ACCENT: 294 BIGTOP; ACCENT: 148 PAPRIKA
1

CPT-2 — MODULAR CARPET TILES
MANUFACTURER: MILLIKEN
STYLE/SIZE: ART MEDIA / CHARCOAL / 1 m X 1m
COLOR: CINNABAR CHA03-147
NOTES: MONOLITHIC PATTERN

WOM — WALK-OFF MAT
MANUFACTURER: SHAW CONTRACT GROUP
STYLE: PORTAL TILE 5T035
COLOR: STERLING 34557
NOTE: MONOLITHIC PATTERN

BASE

WB-1 — RUBBER BASE
MANUFACTURER: JOHNSONITE
STYLE/SIZE: 4" COVE
COLOR: 32 PEBBLE WG

WB-3 — CARPET BASE
MANUFACTURER: MILLIKEN
STYLE/SIZE: ART MEDIA / CHARCOAL
COLOR: CINNABAR CHA03-147
NOTES: BIND TOP EDGE OF CARPET WITH COORDINATING COLOR THREAD

WB-5 — PORCELAIN TILE
MANUFACTURER: STONEPEAK CERAMICS
STYLE/SIZE: CITY 2.0 / COVE BASE 6" X 12"
COLOR: OLIVE CAST
GROUT: LATICRETE, SMOKE GREY 89

WB-2 — CARPET BASE
MANUFACTURER: INTERFACE
STYLE/SIZE: URBAN RETREAT / UR501
COLOR: ASH 103617
NOTES: BIND TOP EDGE OF CARPET WITH COORDINATING COLOR THREAD

WB-4 — PORCELAIN TILE
MANUFACTURER: AMERICAN OLEAN
STYLE/SIZE: REFINED METALS / 2" X 8"
COLOR: STAINLESS / HAMMERED SATIN
GROUT: LATICRETE, SMOKE GREY 89

WALLS

PT-1 — PAINT
MANUFACTURER: SHERWIN WILLIAMS
COLOR: SNOWBOUND SW 7004

PT-4 — PAINT
MANUFACTURER: SHERWIN WILLIAMS
COLOR: REAL RED SW 6868

WP-4 — FLAT SEAM METAL WALL PANEL
MANUFACTURER: MBCI
STYLE/SIZE: RECTANGULAR / 37"W X 21"H
COLOR: CHARCOAL GRAY

PT-2 — PAINT
MANUFACTURER: SHERWIN WILLIAMS
COLOR: PORPOISE SW 7047

PT-5 — PAINT
MANUFACTURER: SHERWIN WILLIAMS
COLOR: KNOCKOUT ORANGE SW 6885

PWT — PORCELAIN TILE
MANUFACTURER: STONE PEAK CERAMICS
STYLE/SIZE: CITY 2.0 / 8" X 48"
COLOR: OLIVE CAST
GROUT: LATICRETE, SMOKE GREY 89
NOTES: 1/3 RUNNING BOND

PT-3 — PAINT
MANUFACTURER: SHERWIN WILLIAMS
COLOR: GLADIOLA SW 6875

WP-2 — FLAT SEAM METAL WALL PANEL
MANUFACTURER: MBCI
STYLE/SIZE: DIAMOND / 18"W X 24"H
COLOR: EQUAL BLEND OF BRICK RED UC4335, RIVER ROUGE RED UC52006 AND ROASTED RED PEPPER UC10230XL

WT — METAL AND GLASS WALL TILE
MANUFACTURER: AMERICAN OLEAN
STYLE/SIZE: MORELLO / 5/8" X 5/8" MOSAIC
COLOR: MOONSTONE MM02
GROUT: LATICRETE, SMOKE GREY 89

CEILING

GWB — GYPSUM BOARD CEILING
COLOR: REFER TO REFLECTED CEILING PLANS

ACT-1 — ACOUSTICAL CEILING TILE
MANUFACTURER: ARMSTRONG
STYLE/SIZE: OPTIMA SQ. LAY-IN 3154 / 48" X 96"
COLOR: WHITE
GRID: PRELUDE 15/16"
TRIM: HEMMED ANGLE & HEMMED CHANNEL MOLDING

EXP — EXPOSED STRUCTURE - UNFINISHED

A-GWB — ACOUSTICAL GYPSUM BOARD CEILING
MANUFACTURER: GYPSORB
STYLE: STRATA 12-20-35
COLOR: REFER TO REFLECTED CEILING PLANS

ACT-2 — ACOUSTICAL CEILING TILE
MANUFACTURER: ARMSTRONG
STYLE/SIZE: OPTIMA SQ. TEGULAR 3249 / 48" X 54" WITH 6" TECHZONE OPTIMA TECHNICAL PANELS
COLOR: WHITE; GRID: SUPRAFINE XL 9/16"
TRIM: 4" AXIOM CLASSIC

EXP-PT-2 — EXPOSED STRUCTURE - PAINTED
MANUFACTURER: SHERWIN WILLIAMS
COLOR: PORPOISE SW 7047

WP-4 — FLAT SEAM METAL WALL PANEL
MANUFACTURER: MBCI
STYLE/SIZE: RECTANGULAR / 37"W X 21"H
COLOR: CHARCOAL GRAY

ACT-3 — ACOUSTICAL CEILING TILE
MANUFACTURER: ARMSTRONG
STYLE/SIZE: OPTIMA SQ. LAY-IN 3150 / 24" X 24"
COLOR: WHITE
GRID: PRELUDE XL 15/16"
TRIM: HEMMED ANGLE MOLDING
2

CABINET BODIES AND CABINET DOORS

PL-1 — PLASTIC LAMINATE
MANUFACTURER: ABET LAMINATI
COLOR:834, MILLERIGHE

PL-4 — PLASTIC LAMINATE
MANUFACTURER: ABET LAMINATI
COLOR: 835, SEI

PL-7 — PLASTIC LAMINATE
MANUFACTURER: ABET LAMINATI
COLOR: 406, SEI

PL-2 — PLASTIC LAMINATE
MANUFACTURER: ABET LAMINATI
COLOR:834, SEI

PL-5 — PLASTIC LAMINATE
MANUFACTURER: ABET LAMINATI
COLOR: 1820, SEI

PL-3 — PLASTIC LAMINATE
MANUFACTURER: ABET LAMINATI
COLOR: 835, MILLERIGHE

PL-6 — PLASTIC LAMINATE
MANUFACTURER: ABET LAMINATI
COLOR: 406, MILLERIGHE

COUNTERTOPS

C-1 — SOLID SURFACE
MANUFACTURER: CORIAN
COLOR: ANTARCTICA

WINDOW COVERINGS

B-1 — DUAL WINDOW SHADES
MANUFACTURER: MECHOSHADE
STYLE: SHEAR AND BLACK-OUT / ELECTRIC
COLOR: TO BE SELECTED FROM MANUFACTURER'S FULL RANGE

B-2 — WINDOW SHADES
MANUFACTURER: MECHOSHADE
STYLE: SHEAR / MANUAL
COLOR: TO BE SELECTED FROM MANUFACTURER'S FULL RANGE

B-3 — WINDOW BLINDS
MANUFACTURER: LEVOLOR
STYLE: 1" METAL BLINDS
COLOR: TO BE SELECTED FROM MANUFACTURER'S FULL RANGE

DOORS AND FRAMES

WD — WOOD DOORS CLAD IN PLASTIC LAMINATE
MANUFACTURER: ABET LAMINATI
FACES OF DOOR: 406, MILLERIGHE
EDGE BANDING ON DOOR: 1820, SEI

F — ALUMINUM DOOR FRAMES
MANUFACTURER: FRAMEWORKS
COLOR: WHITE PAINTED FINISH

ROOM FINISH SCHEDULE

NO.	ROOM NAME	FLOOR FINISH	FLOOR BASE	WALLS NORTH	WALLS EAST	WALLS SOUTH	WALLS WEST	CEILING FINISH	WINDOW COVERING	REMARKS
100	VESTIBULE	WOM	--	WP-2	--	WP-2	--	WP-4		
101	LOBBY	WOM / CPT-1	WB-2	PT-1	--	PT-1	PT-1 / WP-4	ACT-1 / EXP-PT-2		3
102	HALL	PFT / WOM	WB-4 / WB-5	PT-1	PT-1	--	PT-1	GWB		
103	UNISEX T/R	PFT	WB-4 / WB-5	PWT	PWT	PWT	PWT / WT	GWB		5, 7
104	FAMILY T/R	PFT	WB-4 / WB-5	PWT	PWT	PWT	PWT / WT	GWB		5, 7
105	FAMILY T/R	PFT	WB-4 / WB-5	PWT	PWT / WT	PWT	PWT	GWB		5, 7
106	UNISEX T/R	PFT	WB-4 / WB-5	PWT	PWT / WT	PWT	PWT	GWB		5, 7
107	TEEN SPACE	CPT-1	WB-2	--	WP-2 / PT-1	--	PT-1 / PT-4	PLASTIC GLAZING		3
108	DIGITAL MEETING ROOM	CPT-1	WB-2	PT-1	PT-1	PT-1	PT-1 / PT-5	ACT-2 / EXP-PT-2		3
109	MEETING ROOM	CPT-1	WB-2	PT-1 / PT-3	PT-1	PT-1	PT-1	ACT-2 / EXP-PT-2	B-1	3
110	STORAGE	CPT-1	WB-2	PT-1	PT-1	PT-1	PT-1	ACT-3		3
111	FLEX ROOM	CPT-1	WB-2	PT-1	PT-1	PT-1	PT-1	ACT-2 / EXP-PT-2	B-1	3
112	MARKETPLACE	CPT-1	WB-2	--	PT-1	--	PT-1	ACT-1 / EXP-PT-2		3
113	READING	CPT-1/CPT-2	WB-2	--	PT-1	--	PT-1	ACT-1 / EXP-PT-2		3
114	CHILDREN'S READING	CPT-1/CPT-2	WB-2	--	PT-1	PT-1	PLASTIC GLAZING	ACT-1 / EXP-PT-2		3
115	CHILDREN'S ACTIVITY AREA	CPT-2	WB-3	za	PLASTIC GLAZING	PT-1	PT-1 / PT-5	GWB / PLASTIC GLAZING		3
116	STUDY ROOM	CPT-1	WB-2	PT-3	PT-3	PT-3	PT-3	A-GWB		3
117	STUDY ROOM	CPT-1	WB-2	PT-3	PT-3	PT-3	PT-3	A-GWB		3
118	SERVICE DESK	CPT-1	WB-2	--	--	PT-1	PT-1	A-GWB		3
119	STAFF WORKROOM	RT	WB-1	PT-1	PT-1	PT-1	PT-1	A-GWB / ACT-3	B-2	3
120	BOOK DROP	RT	WB-1	PT-1	PT-1	PT-1	PT-1	GWB		2, 3, 6
121	HALL	RT	WB-1	--	PT	--	PT	ACT-3		3
122	HALL	RT	WB-1	PT	PT	PT	PT	ACT-3		1, 3
123	OFFICE	CPT-1	WB-2	PT-1	PT-1	PT-1	PT-1	ACT-3	B-3	3
124	STORAGE	RT	WB-1	PT-1	PT-1	PT-1	PT-1	ACT-3		3
125	MDF	SC	WB-1	PT-1	PT-1	PT-1	PT-1	EXP		3, 4
126	BREAK ROOM	RT	WB-1	PT-1	PT-1	PT-1	PT-1	ACT-3	B-2	3
127	JAN.	SC	WB-1	PT-1	PT-1	PT-1	PT-1	EXP		3
128	STAFF T/R	PFT	WB-4 / WB-5	PWT / WT	PWT	PWT	PWT	GWB		5, 7
129	MECHANICAL	SC	WB-1	PT-1	PT-1	PT-1	PT-1	EXP		3
130	MECHANICAL	SC	WB-1	PT-1	PT-1	PT-1	PT-1	EXP		3
131	VENDING	CONC	--	--	--	--	--	EXP-PT-2		

DOOR SCHEDULE

NO.	LOCATION	DOOR TYPE	DOOR PAIR	DOOR WIDTH	DOOR HEIGHT	DOOR THICK.	DOOR MAT'L	DOOR FINISH	DOOR GLAZING	FIRE RATING	HARDWARE SET	FRAME TYPE	FRAME MAT'L	FRAME FINISH	DETAILS HEAD	DETAILS JAMB	DETAILS THRESHOLD	REMARKS
100	VESTIBULE	AS	PR	14' - 6"	8' - 0"	0' - 1 3/4"	AL	FF	T	-	01	-	AL	FF	13/A6.21	3/A8.01	12/A6/21	1
101	VESTIBULE	AS	PR	14' - 6"	8' - 0"	0' - 1 3/4"	AL	FF	T	-	01	-	AL	FF	13/A6.21	3/A8.01	12/A6/21	1
103	UNISEX T/R	F	-	3' - 0"	7' - 0"	0' - 1 3/4"	SC/WD	PL	-	-	10	A	AL	FF	2/A6.21	2/A6.21	-	9
104	FAMILY T/R	F	-	3' - 0"	7' - 0"	0' - 1 3/4"	SC/WD	PL	-	-	10	A	AL	FF	2/A6.21	2/A6.21	-	9
105	FAMILY T/R	F	-	3' - 0"	7' - 0"	0' - 1 3/4"	SC/WD	PL	-	-	10	A	AL	FF	2/A6.21	2/A6.21	-	9
106	UNISEX T/R	F	-	3' - 0"	7' - 0"	0' - 1 3/4"	SC/WD	PL	-	-	10	A	AL	FF	2/A6.21	2/A6.21	-	9
107A	TEEN SPACE	AG	PR	3' - 6"	9' - 8"	0' - 0 1/2"	GL	-	T	-	01	-	-	FF	16/A6.21	-	16/A6.21	2
107B	MARKETPLACE	AG	-	3' - 3"	8' - 0"	0' - 0 1/2"	GL	-	T	-	02	W24	-	FF	15/A6.21	14/A6.21	-	9
108	DIGITAL MEETING ROOM	AG	-	3' - 0"	8' - 0"	0' - 0 1/2"	GL	-	T	-	13	W26	-	FF	15/A6.21	14/A6.21	-	3, 5, 9
109A	MEETING ROOM	AG	-	3' - 0"	8' - 0"	0' - 0 1/2"	GL	-	T	-	02	W25	-	FF	16/A6.21	-	16/A6.21	2, 9
109B	MEETING ROOM	AG	PR	3' - 6"	8' - 0"	0' - 0 1/2"	GL	-	T	-	01	W25	-	FF	15/A6.21	14/A6.21	-	2, 9
110	STORAGE	F	-	3' - 0"	7' - 0"	0' - 1 3/4"	SC/WD	PL	-	-	08	A	AL	FF	1/A6.21	1/A6.21	-	9
111A	MARKETPLACE	AG	-	3' - 0"	8' - 0"	0' - 0 1/2"	GL	-	T	-	02	W25	-	FF	15/A6.21	14/A6.21	-	3, 4, 9
111B	READING	AG	PR	3' - 6"	8' - 0"	0' - 0 1/2"	GL	-	T	-	01	W25	-	FF	16/A6.21	-	16/A6.21	2, 4, 9
111C	FLEX ROOM	FG	-	3' - 0"	8' - 0"	0' - 1 3/4"	AL	FF	T	-	03	W27	-	FF	14/A6.11	11/A8.04	10/A6.21	4, 9
113	READING	FG	-	3' - 0"	8' - 0"	0' - 1 3/4"	AL	FF	T	-	03	W12	-	FF	14/A6.11	11/A8.04	10/A6.21	9
114	CHILDREN'S READING	FG	-	3' - 0"	8' - 0"	0' - 1 3/4"	AL	FF	T	-	03	W15	-	FF	14/A6.11	11/A8.04	10/A6.21	9
116	STUDY ROOM	AG	-	3' - 6"	8' - 0"	0' - 0 1/2"	GL	-	T	-	02	W23	-	FF	15/A6.21	14/A6.21	-	9
119	STAFF WORKROOM	AG	-	3' - 0"	7' - 0"	0' - 0 1/2"	GL	-	T	-	13	W19	-	FF	15/A6.21	14/A6.21	-	5, 9
120	BOOK DROP	F	-	3' - 0"	7' - 0"	0' - 1 3/4"	SC/WD	PL	-	2 HR	12	A	HM	FF	3/A6.21	3/A6.21	-	9
122A	HALL	F	-	3' - 6"	7' - 0"	0' - 1 3/4"	SC/WD	PL	-	-	06	A	AL	FF	1/A6.21	1/A6.21	-	5, 9
122B	HALL	F	-	3' - 6"	7' - 0"	0' - 1 3/4"	HM	PT	-	-	04	A	HM	PT	4/A6.21	4/A6.21	10/A6.21	5, 9
123	OFFICE	FG	-	3' - 0"	7' - 0"	0' - 1 3/4"	SC/WD	PL	T	-	09	A	AL	FF	1/A6.21	1/A6.21	-	9
124	STORAGE	F	-	3' - 0"	7' - 0"	0' - 1 3/4"	SC/WD	PL	-	-	08	A	AL	FF	1/A6.21	1/A6.21	-	9
125	MDF	F	-	3' - 0"	7' - 0"	0' - 1 3/4"	SC/WD	PL	-	-	07	A	AL	FF	1/A6.21	1/A6.21	-	5, 9
127	JAN.	F	-	3' - 0"	7' - 0"	0' - 1 3/4"	SC/WD	PL	-	-	08	A	AL	FF	1/A6.21	1/A6.21	-	9
128	STAFF T/R	F	-	3' - 0"	7' - 0"	0' - 1 3/4"	SC/WD	PL	-	-	10	A	AL	FF	2/A6.21	2/A6.21	-	9
129	MECHANICAL	F	-	4' - 0"	7' - 0"	0' - 1 3/4"	HM	PT	-	-	05	C	HM	PT	9/A6.21	8/A6.21	-	8, 9
130	MECHANICAL	F	-	3' - 0"	7' - 0"	0' - 1 3/4"	HM	PT	-	-	05	B	HM	PT	12/A6.21	8/A6.21, 5/A6.21	-	8, 9
131A	VENDING	OHC	-	8' - 2"	7' - 6"	0' - 1"	STL	FF	-	-	-	-	-	FF	4/A4.11	5/A4.11, 6/A4.11	-	7
131B	VENDING	OHC	-	8' - 2"	7' - 8"	0' - 1"	STL	FF	-	-	-	-	-	FF	4/A4.11	5/A4.11, 6/A4.11	-	7
134	MECH. YARD	F	-	4' - 0"	4' - 5"	0' - 1"	STL	PT	-	-	11	-	-	-	-	6/A6.21	-	6
135	MECH. YARD	F	PR	3' - 2"	6' - 8"	0' - 1"	STL	PT	-	-	11	-	-	-	-	7/A6.21	-	6

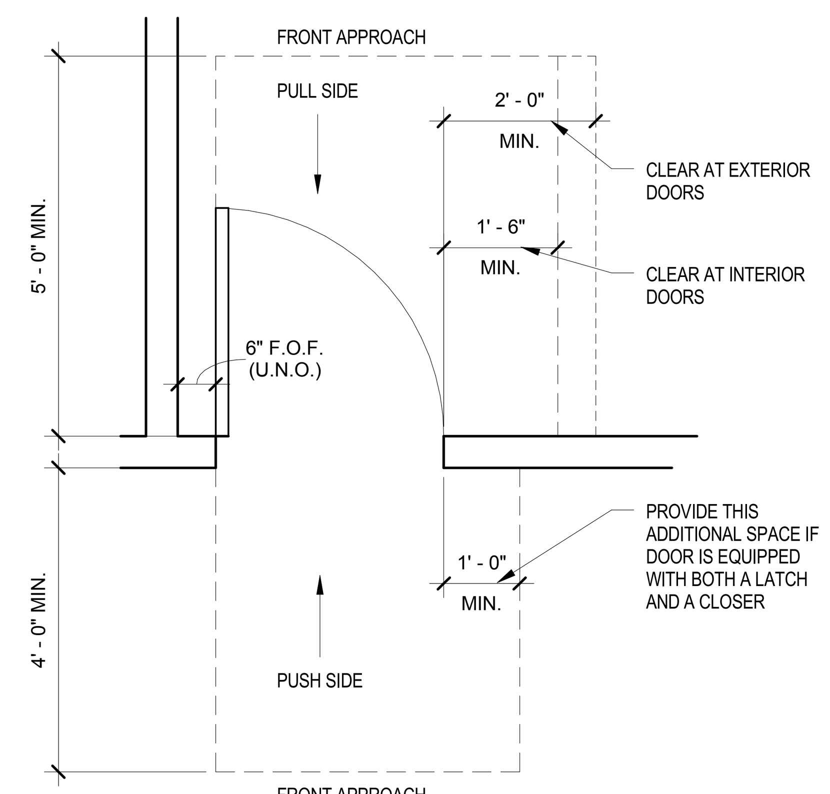

02 TYPICAL CLEARANCE AT DOORS
1/2" = 1'-0"

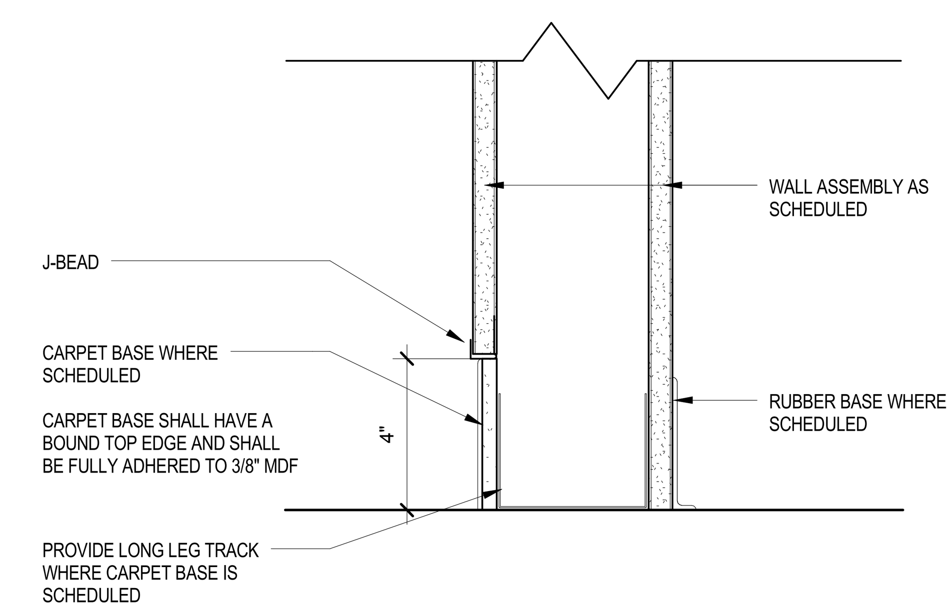

01 CARPET AND RUBBER BASE
3" = 1'-0"

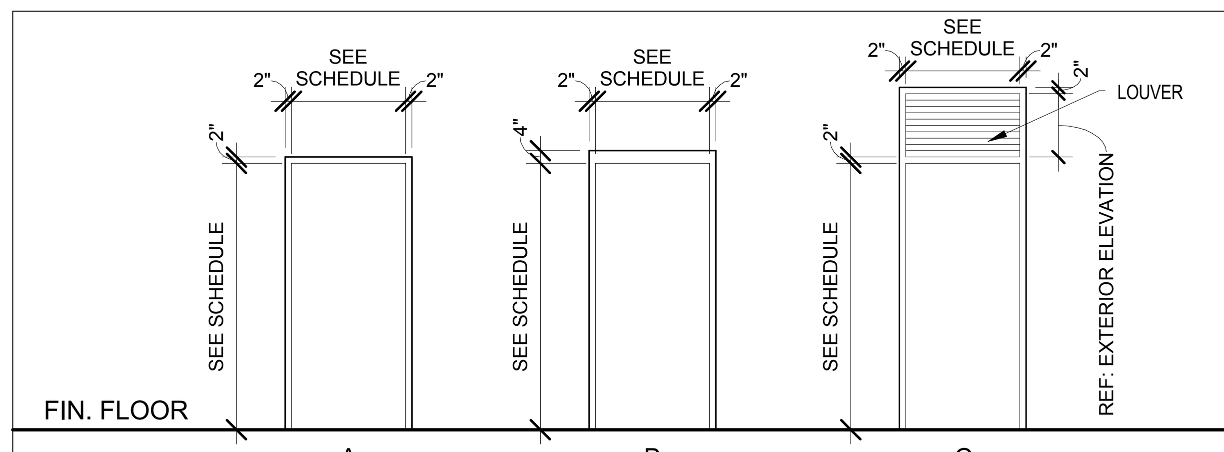

DOOR FRAME TYPES

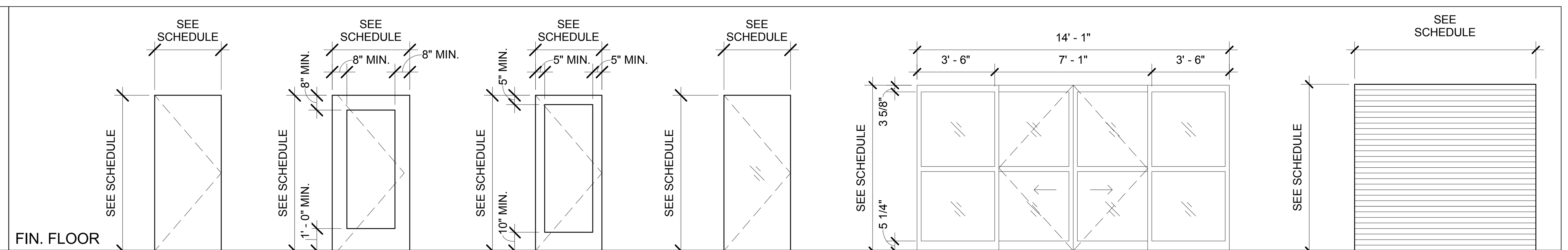

DOOR TYPES

GENERAL NOTES:

ROOM FINISH

1. PROVIDE AND INSTALL METAL EDGE CHANNELS WHERE GYP. BD. WALLS AN`D CEILINGS ABUT CMU WALLS. CAULK THE JOINT BETWEEN THE CMU AND THE METAL EDGE TRIM.
2. ALL GYP. BD. WALLS AND CEILINGS SHALL BE TEXTURED WITH LEVEL 4, VERY LIGHT ORANGE PEEL FINISH. PREPARE MOCK-UP FOR ARCHITECT'S APPROVAL.
3. CONTRACTOR SHALL COORDINATE WITH THE MEP DRAWINGS AND SHALL THICKEN WALLS AS REQUIRED TO INSTALL MEP ITEMS CALLED FOR. VERIFY WITH THE ARCHITECT THICKENED WALLS THAT MAY EFFECT HANDICAP ACCESS REQUIREMENTS.
4. SEAL ALL GAPS BETWEEN ELECTRICAL CONDUITS AND CEILINGS AND WALLS.
5. PAINT ALL EXPOSED ELECTRICAL BOXES AND CONDUITS.
6. SEE PLANS AND PARTITION TYPES FOR SUBSTRATES OF WALL FINISHES.
7. PROVIDE 4" MARBLE TRANSITION STRIP BETWEEN PORCELAIN TILE AND ADJACENT FLOOR SURFACE AT TOILET ROOMS AND JANITOR'S CLOSET. BEVEL EDGE DOWN TO MAXIMUM OF 1/4" VERTICAL TRANSITION BETWEEN TILE AND ADJACENT FLOOR SURFACE AT ALL CONDITIONS TO MEET ADA REQUIREMENTS. PROVIDE MANUFACTURER'S STANDARD TRANSITION STRIPS FOR ALL OTHER TRANSITIONS.
8. REFER TO REFLECTED CEILING PLANS FOR CEILING HEIGHTS.
9. ALL HOLLOW METAL DOORS AND FRAMES SHALL BE PAINTED.
10. REVIEW INTERIOR ELEVATIONS FOR SPECIAL CONDITIONS RELATING TO FINISHES.

ROOM FINISH SCHEDULE REMARKS

1. SOUTH WALL TO RECEIVE HI-IMPACT TYPE "X" GYPSUM BOARD
2. ALL INTERIOR WALLS TO RECEIVE HI-IMPACT TYPE "X" GYPSUM BOARD
3. REFER TO DETAIL 01/A6.01 FOR CARPET BASE AND RUBBER BASE DETAILS
4. PROVIDE 8'-0" X 3/4" FIRE-RATED PLYWOOD WAINSCOT ON ALL WALLS. INSTALL PLYWOOD 2'-0" AFF, VERTICALLY.
5. PROVIDE 5/8" GLASS MAT FACED TILE BACKER BOARD BEHIND ALL WALL TILE INDICATED IN ROOM FINISH SCHEDULE.
6. 2-HOUR SEPARATION WALL - ALL FOUR (4) SIDES. PROVIDE TWO (2) LAYERS OF 5/8" GYP. BD. ON EITHER SIDE OF METAL STUDS UP TO CEILING LID.
7. REFER TO DETAIL 13/A7.01 FOR TYPICAL FLOOR DRAIN DETAIL.

DOOR SCHEDULE MATERIAL LEGEND

DOOR MATERIAL
SCW - SOLID CORE WOOD
AL - ALUMINUM
HM - HOLLOW METAL
STL - STEEL

DOOR MATERIAL FINISH
PT - PAINT
ST - STAINED
ANOD. - ANODIZED - FACTORY FINISHED
FF - FACTORY FINISHED
TR - TRANSPARENT - FACTORY FINISHED
STL - STEEL - FACTORY FINISHED
PL - PLASTIC LAMINATE - 1 COLOR AT DOOR FACES & 1 COLOR AT EDGES

FRAME MATERIAL
AL - ALUMINUM
HM - HOLLOW METAL
CW - CURTAIN WALL

FRAME MATERIAL FINISH
PT - PAINT
ANOD. - ANODIZED - FACTORY FINISHED
FF - FACTORY FINISHED
TR - TRANSPARENT - FACTORY FINISHED

GLAZING TYPE
T - TEMPERED

DOOR SCHEDULE REMARKS

1. AUTOMATIC SLIDING BI-PARTING DOORS.
2. ALL GLASS SLIDING BI-PARTING DOORS.
3. ALL GLASS DOOR.
4. NOT IN BASE BID. REFER TO ALTERNATE BID #1.
5. PREP FRAME FOR CARD READER.
6. STEEL GATES - REF: MECH. YARD WALL HEIGHT
7. OVERHEAD STEEL COILING DOOR
8. LOUVER ABOVE DOOR HEAD IN DOOR FRAME
9. REFER TO DETAIL 02/A6.01 FOR TYPICAL CLEARANCES AT DOORS.

OCO LPA
p. 210.829.1737
w. ocolpa.com
f. 210.829.1730
e. lpa@lpainc.com
114 East Cevallos Street
San Antonio, Texas 78204

REGISTERED ARCHITECT
MICHAEL N. CONRAD
8922
STATE OF TEXAS

DISTRICT 2 BRANCH LIBRARY
U.S. HWY 87, SAN ANTONIO, TEXAS 78222

Developed for
CITY OF SAN ANTONIO

© Copyright 2014

Revision		Date
1	ADDENDUM #1	11/07/14
2	ADDENDUM #4	11/25/14

Submittal	Date

Job. No.	1462510
Date	10.17.2014
Checked by	MNC
Scale	As indicated

ROOM FINISH AND DOOR SCHEDULES

A6.01

BINDING EDGE

SPLIT DX W/ ELEC. HEAT

TAG	AHU-1A	AHU-1B	AHU-2	AHU-3	AHU-4	AHU-5	AHU-6
SUPPLY CFM	3795	3795	650	1405	1700	2710	1200
MIN. O.A. CFM	540	540	150	410	420	600	180
EXT. STATIC INCHES WC	1.5	1.5	1	1.5	1.5	1.5	1.5
MNIMUM HP	5	5	3/4	2	3	5	2
DRIVE TYPE	BELT	BELT	BELT	BELT	BELT	BELT	BELT
MOTOR (VOLTS/PHASE)	460/3	460/3	460/3	460/3	460/3	460/3	460/3
FULL LOAD CURRENT	6.6 A	6.6 A	1.6 A	2.7 A	4.0 A	6.6 A	2.7 A
SINGLE POINT POWER CONNECTION	YES	YES	YES	YES	YES	YES	YES
COOLING							
ENTERING AIR DB/WB	78.2/64.3	78.2/64.3	78/65	81.7/66.1	80.8/65.6	80/67	78.5/64.4
LEAVING AIR DB/WB	51.7/51.5	51.7/51.5	53.3/52	53.2/52.1	50.1/49.9	52.8/52.6	53.2/52.2
MIN. TOTAL CAPACITY (BTU/HR)	141446	141446	23783	58613	77910	95350	43041
MIN. SENSIBLE CAPACITY (BTU/HR)	109970	109970	17114	43765	57068	77470	33169
HEATING							
ENTERING AIR DB	60.0	60.0	60.0	60.0	60.0	60.0	60.0
LEAVING AIR DB	86.7	86.7	97.9	84.7	80.5	90.0	89.0
ELECTRIC HEAT (KW)	32	32	6	11	11	26	11
TOTAL CAPACITY (BTU/HR)	109248	109248	20484	37554	37554	88760	37554
MANUFACTURTER	DAIKIN	DAIKIN	DAIKIN	DAIKIN	DAIKIN	DAIKIN	DAIKIN
MODEL	LAH010A	LAH010A	LAH002A	LAH004A	LAH004A	LAH007A	LAH003A
WEIGHT (LBS)	784	784	270	399	437	700	362
NOTES:							
OUTDOOR UNIT							
TAG	CU-1A	CU-1B	CU-2	CU-3	CU-4	CU-5	CU-6
VOLTAGE/PHASE	460/3	460/3	208/230/3	460/3	460/3	460/3	460/3
QUANTITY OF COMPRESSOR(S)	2	2	1	1	1	2	1
MCA	27.0	27.0	17.6	10.6	10.6	17.0	8.4
MOCP	35	35	30	15	15	25	15
AMBIENT AIR °F	105	105	105	105	105	105	105
MIN. CONDENSING UNIT EFFICIENCY AT ARI EER	11.0	11.0	14.0	14.0	14.0	11.0	14.0
MANUFACTURER	DAIKIN	DAIKIN	DAIKIN	DAIKIN	DAIKIN	DAIKIN	DAIKIN
MODEL	RCS12F150D	RCS12F150D	DZ13SA-024	DZ13SA-060	DZ13SA-060	DZ11SA090	DZ13SA-048
NOTES: (2)	1,3,4,6,7	1,3,4,6,7	1,4,6,8	1,4,6,8	1,4,5,6,8	1,3,4,6,7,8	1,4,6,8

NOTES:

1. FURNISH AND INSTALL UNITS WITH 7 DAY PROGRAMMABLE T-STAT WITH REMOTE SENSER.
2. REFER TO INSTALLATION DIAGRAMS
3. FURNISH CONDENSING UNIT WITH DUAL COMPRESSORS AND TWO STAGE COOLING
4. FURNISH CONDENSING UNIT WITH HAIL GUARDS.
5. AHU-4 AND CU-4 WITH ALL ASSOCIATED DUCT WORK ARE ADD ALTERNATE; DELETE IF ALTERNATE IS NOT ACCEPTED.
6. AIR UNIT SHALL HAVE FACTORY MOUNTED HEATER AND WIRED FOR SINGLE POINT POWER CONNECTION
7. HEATER SHALL BE FURNISHED WITH TWO STAGE HEATING
8. THIS UNIT IS HEAT PUMP UNIT FURNISH ALL ACCESSORIES FOR PROPER OPERATION

MINI SPLIT DX

TAG	IU-1
SUPPLY CFM	850
MIN. O.A. CFM	0
FAN MOTOR FLA	0.76
DRIVE TYPE	DIRECT
COOLING	
ENTERING AIR DB/WB	75 / 62.5
LEAVING AIR DB/WB	55 / 54
MIN. TOTAL CAPACITY (MBH)	30.7
MANUFACTURTER	MITSUBISHI
MODEL	MSY-D30NA
OUTDOOR UNIT	
TAG	OU-1
VOLTAGE/PHASE	208 / 1
COMPRESSOR(S)	1
MCA	21
MOCP	25
AMBIENT AIR °F	95
MIN. SYSTEM EFFICIENCY AT ARI EER / (SEER)	(16.0)
MANUFACTURER	MITSUBISHI
MODEL	MUY-D30NA
NOTES:	1,2,3

NOTES:
1. FURNISH AND INSTALL UNIT WITH 24V WALL MOUNTED T-STAT., CONTROLS AND MOUNTING KIT FOR COMPLETE INSTALLATION.
2. SIZE, INSULATE AND PROVIDE TRAPS IN REFRIGERANT LINES PER MANUFACTURES RECOMMENDATIONS.
3. INSIDE UNIT SHALL BE POWERED FROM OUTSIDE UNIT.

FAN SCHEDULE

TAG	SERVICE	TYPE	CFM	S.P. (IN.H2O)	MOTOR HP	VOLTS/PH /HZ	FAN RPM	MAX. SONES	INTERLOCK WITH	DRIVE TYPE	REFERENCES SELECTION - GREENHECK (U.N.O.)	NOTES
F-1	FAMILY T/R 105	CEILING MTD	100	0.75	150 W	115/1/60	948	3.4	AHU-5	DIRECT	SP-B150	1,2,3,4
F-2	UNISEXT/R 106	CEILING MTD	100	0.75	150 W	115/1/60	948	3.4	AHU-5	DIRECT	SP-B150	1,2,3,4
F-3	FAMILY T/R 104	CEILING MTD	100	0.75	150 W	115/1/60	948	3.4	AHU-5	DIRECT	SP-B150	1,2,3,4
F-4	UNISEXT/R 103	CEILING MTD	100	0.75	150 W	115/1/60	948	3.4	AHU-5	DIRECT	SP-B150	1,2,3,4
F-5	STAFF T/R	CEILING MTD	100	0.75	150 W	115/1/60	948	3.4	AHU-5	DIRECT	SP-B150	1,2,3,4
F-6	JANITOR 127	CEILING MTD	100	0.75	150 W	115/1/60	948	3.4	CONTINUOUS RUN	DIRECT	SP-B150	1,2,3,4
F-7	CRAWL SPACE	INLINE	500	0.63	1/6	115/1/60	1024	11	HUMIDISTAT	DIRECT	SQ-95	1,2,3,5

NOTES:

1. FURNISH WITH DISCONNECT SWITCH, BACKDRAFT DAMPER, AND ALL REQUIRED SWITCHES AND RELAYS FOR PROPER INTERLOCK.
2. REFER TO SPECIFICATIONS FOR ADDITIONAL REQUIREMENTS.
3. FURNISH AND INSTALL WITH SOLID STATE FAN SPEED CONTROLLER.
4. FURNISH WITH BRICK VENT MODEL BVE-808
5. FURNISH WITH INLET GAURD

AIR DEVICE SCHEDULE

TAG	CFM RANGE	SUPPLY	RETURN	EXHAUST	INLET SIZE (IN.)	MODULE SIZE	P.D. (IN.H2O)	THROW @ 100 FPM	O.B.D. REQUIRED	MAX N.C	MATERIAL	REFERENCES SELECTION - PRICE (U.N.O.)	NOTES
A	0~120	X			6" Ø	24x24	0.03	3	NO	15	ALUMINUM	ASPD	1,2
B	125~250	X			8" Ø	24X24	0.06	4	NO	15	ALUMINUM	ASPD	1,2
C	255~380	X			10" Ø	24X24	0.09	6	NO	18	ALUMINUM	ASPD	1,2
D	385~550	X			12" Ø	24X24	0.13	7	NO	21	ALUMINUM	ASPD	1,2
E	0~120	X			6" Ø	12X12	0.09	4	NO	15	ALUMINUM	ASPD	1,2
F	125~220	X			8" Ø	12X12	0.15	6	NO	17	ALUMINUM	ASPD	1,2
G	0-625	X			18x10	20x12	0.08	48	NO	21	ALUMINUM	HCD1	1,2
H	626-950	X			30x10	32x12	0.08	59	NO	20	ALUMINUM	HCD1	1,2
J	0-600	X			18X8	20X10	0.08	31 @ 0°	NO	22	ALUMINUM	610L	1,2
K	0~2000		X	X	22X22	24X24	0.05	-	NO	20	ALUMINUM	80	1,2
L	0~480		X	X	10X10	12X12	0.05	-	NO	19	ALUMINUM	80	1,2
M	0-1225		X	X	20X18	22X20	0.10	-	NO	27	ALUMINUM	630L	1,2
N	0-1900		X	X	40X16	42X18	0.02	-	NO	20	ALUMINUM	610ZL	1,2
P	100-500	X			10" Ø	60"	0.10	10	YES	26	ALUMINUM	SDBI/100/4	1,2,3
R	100-300	X			8" Ø	48"	0.10	12	YES	22	ALUMINUM	SDBI/75/4	1,2,3

NOTES:

1. FURNISH AND INSTALL AIR DEVICE WITH LAY-IN BORDER FRAME FOR LAY-IN CEILINGS OR SURFACE MOUNTING FRAME FOR MOUNTING IN GYP. BOARD CEILINGS OR WALL.
2. FURNISH AND INSTALL AIR DEVICE WITH O.B.D. IN GYP. BOARD CEILINGS. REFER TO ARCHITECTURAL DRAWINGS.
3. FURNISH WITH INSULATED SUPPLY PLENUM, AIR DEVICE SHALL BE COMPATIBLE WITH ARMSTRONG TECHZONE CEILING.

LPA
p. 210.829.1737
f. 210.829.1730
w. oculpa.com
e. lpa@lpainc.com
114 East Cevallos Street
San Antonio, Texas 78204

H2MG
Mechanical • Electrical • Plumbing Engineers
70 NE Loop 410, Suite 1075
San Antonio, Texas 78216
Tel: 210.525.0270
Fax: 210.525.0235
Texas Firm Registration # 12063
Copyright © 2014

DISTRICT 2 BRANCH LIBRARY

U.S. HWY 87, SAN ANTONIO, TEXAS 78222

Developed for CITY OF SAN ANTONIO

The set of other project documents, and of these specifications and designs, incorporated herein, are instruments of service of Lopez Pelaez Architects, P.C. (LPA), and remain the property of LPA, PC. LPA, and cannot be reproduced in whole or in part, or in any form or manner, except as assumed in the contractual agreement between LPA and its client, or be assigned to any third party without such project document was reproduced or modifications made without LPA's written permission, LPA assumes no responsibility for the reuse of the documents by other parties involved with misuse to fully indemnify and defend LPA against any and all claims, demands, costs or liabilities arising from such reuse or modifications.

Project documents describe design intent of work and are not a representation of as-built or existing conditions. LPA, PC, assumes no responsibility for accuracy of information concerning the accuracy of documents and are not responsible for the accuracy of existing site, structure, project documents and the existing conditions.

© Copyright 2014

Revision	Date
1 REVISED AIR DEVICE SCHEDULE	11-18-14

Submittal	Date

Job. No.	99022
Date	OCTOBER 17, 2014
Checked by	Staff
Scale	AS NOTED

MECHANICAL SCHEDULES

M002

SHEET M101 KEYED NOTES

TAG	NOTE CONTENTS
1	MOUNT UNIT MAXIMUM 11'-0" A.F.F. ROUTE CONDENSATE TO MOP SINK. ROUTE REFRIGERANT LINES TO OUTDOOR CONDENSING UNIT (OU-1).
2	REMOTE TEMPERATURE SENSOR WITH SMALL LOCKABLE OPAQUE VANDEL PROOF COVER.
3	REFER TO ARCHITECTURAL ELEVATIONS FOR LOCATION OF BRICKVENT. OFFSET AND CONNECT DUCT AS REQUIRED FOR VENT LOCATION.
4	36 X 18 X 12 PLENUM. CONNECT FAN DISCHARGE TO PLENUM. CONNECT PLENUM TO ARCHITECTURAL LOUVER.
5	FURNISH LINE VOLTAGE HUMIDISTAT TO ENERGIZE
6	REFER TO PARTIAL UNDERFLOOR PLAN ,2/M101 THIS SHEET, FOR CRAWL SPACE VENTILATION.
7	IF ALTERNATE IS NOT ACCEPTED DELETE ALL DUCT, AIR DEVICES, CONTROLS, ETC. INCLUSIVE OF AHU-4 AND CU-4.
8	LOCATE THERMOSTATS FOR AHU-1A 1B & AHU-5 AT THIS LOCATION; REFER TO PLAN FOR REMOTE SENSOR LOCATION.
9	LOCATE THERMOSTATS FOR AHU-2,3,4 & 6 AT THIS APPROXIMATE LOCATION; REFER TO PLAN FOR REMOTE SENSOR LOCATION.
10	TYPICAL MOTORIZED OUTSIDE AIR DAMPER AT ALL AHU'S.
11	40 X 24 X 24 OUTSIDE AIR PLENUM CONNECT TO ARCHITECTURAL LOUVER.
12	ROUTE REFRIGERANT PIPING FROM CONDENSING UNIT TO RESPECTIVE AIR HANDLING UNIT; SIZE REFRIGERANT LINES PER MANUFACTURES REQUIREMENTS; REFER TO DETAIL.
13	ROUTE CONDENSATE DRAINS FROM UNITS TO FLOOR DRAIN. ROUTE TO AVOID TRIP HAZARD.
14	REFER TO ARCHITECTURAL RETURN AIR FEATURE AT THIS LOCATION.
15	RETURN AIR FILTER PULL. (TYPICAL)
16	PROVIDE A FIRE/SMOKE DAMPER AT WALL PENETRATION. REFER TO ELECTRICAL DRAWINGS FOR POWER.

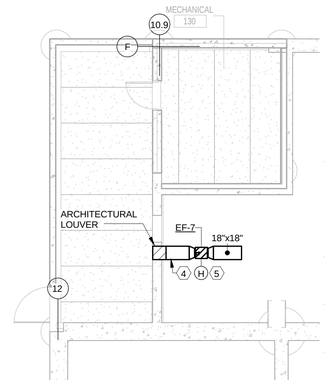

2 PARTIAL UNDERFLOOR PLAN
1/8" = 1'-0"

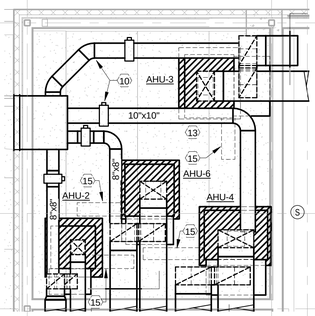

3 ENLARGED MECH. ROOM 130 - HVAC
1/4" = 1'-0"

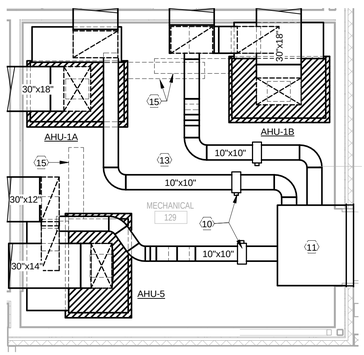

4 ENLARGED MECH. ROOM 128 - HVAC
1/4" = 1'-0"

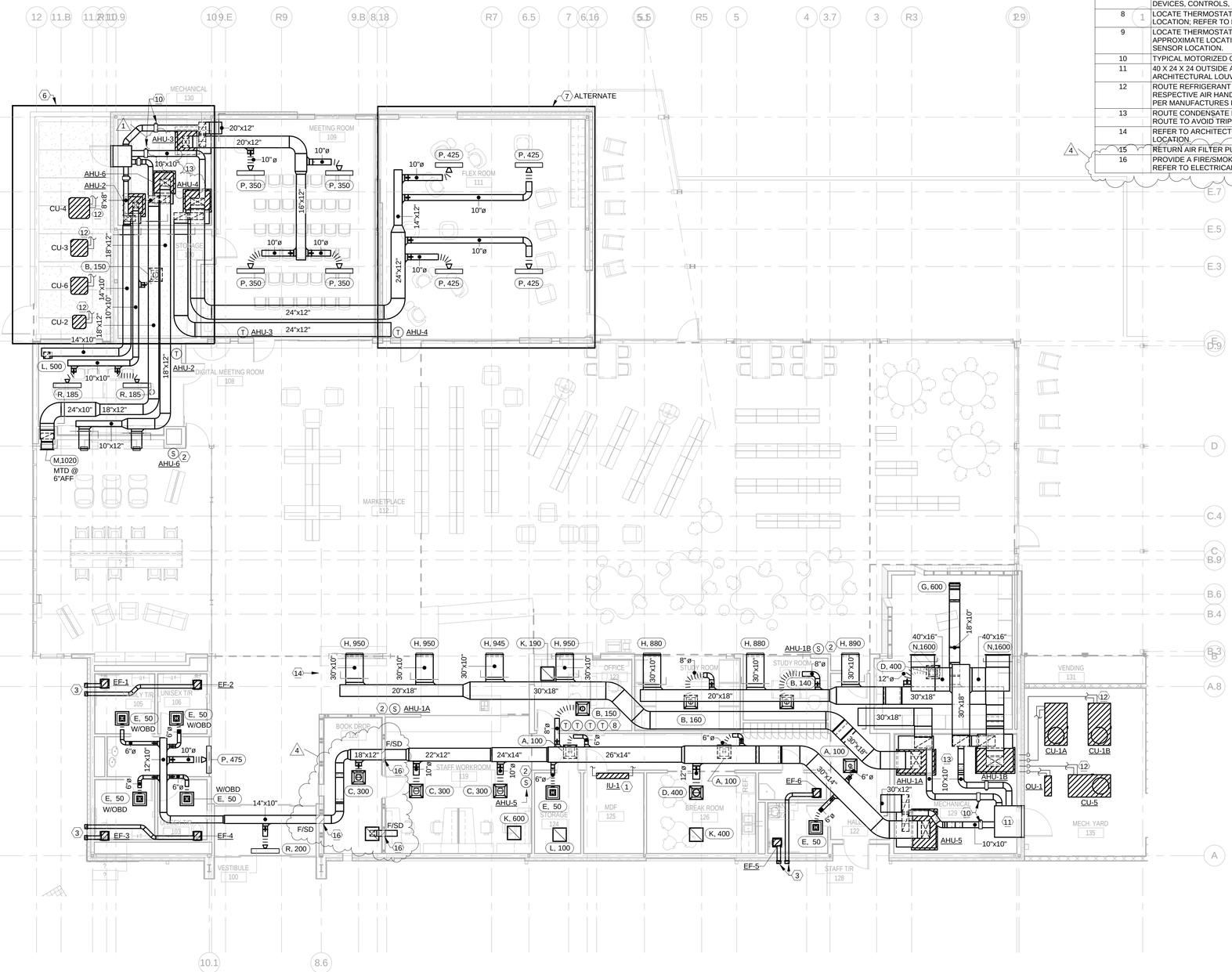

1 LEVEL 1 - FLOOR PLAN - HVAC
1/8" = 1'-0"

LPA
t. 210.829.1730
e. lpa@painc.com
p. 210.829.1737
w. oculpa.com
114 East Cevallos Street
San Antonio, Texas 78204

10/17/14

H2MG
Consulting Mechanical • Electrical • Plumbing Engineers
7848 Louis Pill, Suite 115
San Antonio, TX 78229
Tele: 210.525.0220
Fax: 210.525.0230
Texas Firm Registration #F-12003

Copyright © 2014

DISTRICT 2 BRANCH LIBRARY

U.S. HWY 87, SAN ANTONIO, TEXAS 78222

Developed for CITY OF SAN ANTONIO

This and all other project documents and all ideas, designs, arrangements and plans indicated or represented thereon are the property of LPA and / or LPA's and / or LPA's Consultants' respective clients, as the case may be. LPA and Client, LPA's client grant a limited license to use the documents on the project for which they are intended to be used only unless but exclusively, details of LPA and LPA's Consultants to the maximum legal extent permitted by law. Reproduction of documents without the written consent of LPA and LPA's Consultants to the maximum legal extent permitted by law is prohibited. Any use of documents for other than the intended purpose or for any other project, or extensions of the project to other sites, without the written consent of LPA and LPA's Consultants to the maximum legal extent permitted by law is prohibited. LPA and LPA's Consultants are not responsible for any modifications to the documents made by others, directly or indirectly from project document release.

Project documents describe design intent of work and are not intended to be construction means and methods. LPA and LPA's Consultants make no representations or warranties as to the accuracy or completeness of, nor are responsible for any discrepancies between project documents and existing conditions.

© Copyright 2014

Revision	Date
1 ADDENDUM 1	11-7-14
4 ADDENDUM 4	11-24-14

Submittal	Date

Job. No.	12021
Date	OCTOBER 17, 2014
Checked by	BR
Scale	As indicated

LEVEL 1 - FLOOR PLAN HVAC

M101

GENERAL NOTES

1. ALL TYPE XA EXIT LIGHTING FIXTURES, THIS SHEET, SHALL BE UNSWITCHED AND ON CIRCUIT EB-1 U.O.N. ALL TYPE XA2 LIGHTING FIXTURES, THIS SHEET, SHALL BE UNSWITCHED AND ON CIRCUIT H1-19. INVERTER POWERED LIGHT SHALL OPERATE ON POWER FAILURE. EXIT SIGNS SHALL BURN 24 HOURS / DAY.
2. REFER TO DETAIL 9, ON E601 FOR LIGHTING CONTROLS DETAIL.
3. ALL INTERIOR ELECTRICAL BOXES AND CONDUIT TO BE CONCEALED AND OUT OF PLAIN SIGHT. VERIFY WITH ARCHITECT, LOCATIONS WHERE EXPOSED ELECTRICAL BOXES AND CONDUIT MAY BE REQUIRED PRIOR TO INSTALLATION.

1	KEYED NOTES E101
1	PROVIDE WEATHERPROOF JBOX FOR CONNECTION TO EXTERIOR LED SIGN LIGHTING FIXTURES, TYPE W AND W1. PROVIDE 400VA 120-24V TRANSFORMER LOCATED ABOVE NEAREST ACCESSIBLE CEILING FOR POWER TO EXTERIOR LIGHTING FIXTURES TYPE W AND W1. REFER TO LIGHTING FIXTURE SCHEDULE. COORDINATE LOCATION WITH ARCHITECT.
2	TO UNDERFLOOR LIGHTING FIXTURES. SEE 1/E002 FOR UNDERFLOOR LIGHTING.
3	PHOTOCELL 'ON', TIME SWITCH 'OFF' VIA CONTACTOR CONTROLLED THRU TIME SWITCH. LOCATE THE TIME SWITCH AND 6-POLE CONTACTOR ADJACENT TO PANEL 'H1'.
4	COORDINATE LOCATION OF TYPE 'U' LIGHTING FIXTURES WITH ARCHITECT PRIOR TO ROUGH-IN. 2#12, #12GND, 3/4"C. TO CIRCUIT INDICATED THROUGH CONTACTOR CONTROLLED VIA TIME SWITCH.
5	COORDINATE LOCATION OF J/BOXES ABOVE CEILING FOR ARTISTIC LIGHT FEATURE EQUIPMENT INSTALLATION WITH ARCHITECT PRIOR TO ROUGH-IN.
6	COORDINATE CONTROLS FOR ARTISTIC LIGHTING FEATURE WITH ARTIST PROVIDED EQUIPMENT AND DEVICES IN MDF ROOM. INSTALL PER MANUFACTURERS REQUIREMENTS AND INSTRUCTIONS. PROVIDE 120V POWER FOR ARTISTIC LIGHT FEATURE; 2#12, #12GND, 1/2"C. FROM CIRCUIT L2-26
7	PROVIDE BRANCH CIRCUIT IN MULLION FROM DRYWALL ABOVE TO EXIT LIGHT. MOUNT EXIT LIGHT ON CURTAIN WALL FROM ABOVE THE DOOR.

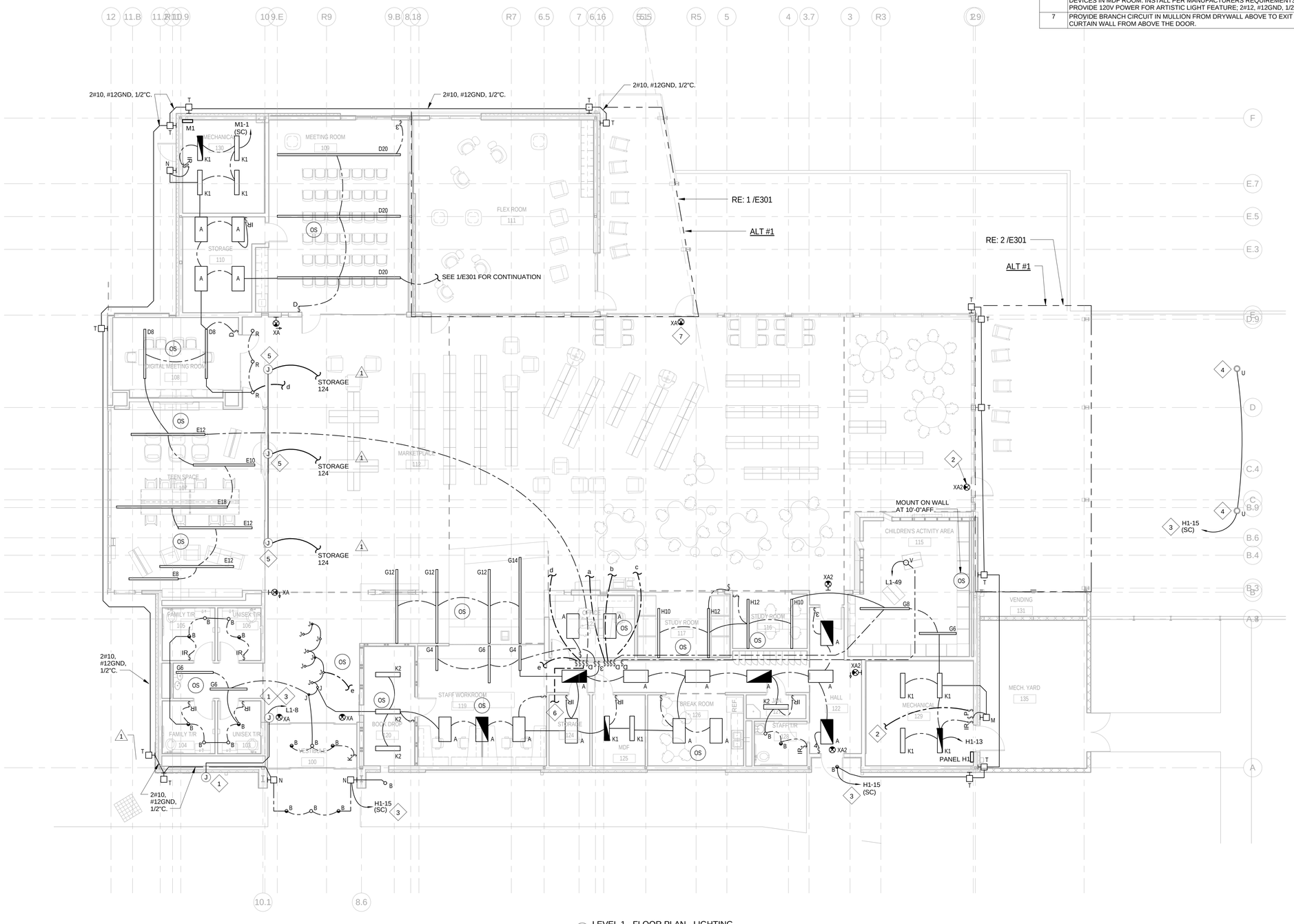

1 LEVEL 1 - FLOOR PLAN - LIGHTING
1/8" = 1'-0"

LPA
t. 210.829.1730
e. lpa@lpainc.com
p. 210.829.1737
w. oculpa.com
114 East Cevallos Street
San Antonio, Texas 78204

STATE OF TEXAS
ALBERTO E. MARTINEZ
102236
PROFESSIONAL ENGINEER
10/17/14

H2MG
Consulting Mechanical • Electrical • Plumbing Engineers
79 NE Loop 410, Suite 975
San Antonio, Texas 78216
Tel#: 210.525.0220
Fax: 210.525.0225
Texas Firm Registration #F-12003

Copyright © 2014

DISTRICT 2 BRANCH LIBRARY

U.S. HWY 87, SAN ANTONIO, TEXAS 78222

Developed for CITY OF SAN ANTONIO

This and all other project documents and all ideas, arrangements, and designs incorporated therein are the property of LPA, Inc. ("LPA") and cannot be reproduced without the express written permission of LPA, Inc. Title to all documents remains with LPA and LPA's consultants. Client is licensed to use the documents for the project described therein provided that any and all LPA and LPA's consultants' intellectual property rights are preserved and protected. Client agrees to indemnify and hold LPA and LPA's consultants harmless for any unauthorized reuse of the documents by Client or others, including, but not limited to, any derivative works, in whole or in part, based on the documents, or any portion thereof, or information contained therein, and Client shall be liable for all damages, including, but not limited to, consequential damages, arising out of such unauthorized reuse. Client agrees that any such unauthorized reuse of the documents by Client or others is not only unlawful but exploitative, profits all from others' misfortune, and Client agrees to pay all costs and fees incurred by LPA and LPA's consultants in the enforcement of LPA's and LPA's consultants's intellectual property rights. Client agrees that LPA and LPA's consultants are not responsible for any alterations made to the documents by others, including, but not limited to, adding, deleting, or altering conditions.

Project documents describe design intent of works and are not sufficient for construction purposes. Contractor is responsible for and LPA's, Consultants' role is representative of owner's interests. Contractor is responsible for and LPA is not responsible for any discrepancies between project documents and existing conditions.

© Copyright 2014

Revision		Date
1	ADDENDUM 1	11-07-14
2	ADDENDUM 4	11-24-14

Submittal	Date

Job. No.	12021
Date	OCTOBER 17, 2014
Checked by	AEM
Scale	1/8" = 1'-0"

LEVEL 1 - FLOOR PLAN LIGHTING

E101

GENERAL NOTES

1. ALL FLOOR PENETRATIONS ARE TO BE COORDINATED AND VERIFIED BY HOLLOW CORE PLANK SYSTEM MANUFACTURER, ARCHITECT AND STRUCTURAL ENGINEER PRIOR TO CONSTRUCTION. IF ANY FIELD PENETRATIONS OR LOCATION ADJUSTMENTS ARE REQUIRED, ARCHITECT AND STRUCTURAL ENGINEER ARE TO BE NOTIFIED PRIOR TO ANY CORE DRILLING OR MODIFICATION TO THE FLOOR SYSTEM.
2. UNLESS OTHERWISE NOTED, ALL FLOOR OUTLETS SHALL BE A FLUSH MOUNTED POKE-THRU WIREMOLD #6ATCPXX WITH QUAD POWER AND DATA JACKS. COORDINATE DEVICE MOUNTING PLATES AND DATA JACK TYPES WITH TECHNOLOGY INSTALLER. COLOR BY ARCHITECT.
3. REFER TO ARCHITECTURAL DRAWING ELEVATIONS FOR ALL DEVICE MOUNTING LOCATIONS. VERIFY WITH ARCHITECT DEVICES NOT SHOWN ON ARCHITECTURAL INTERIOR ELEVATIONS PROVIDED IN THESE DOCUMENTS.
4. REFER TO TECHNOLOGY DRAWINGS FOR ELECTRICAL ROUGH-IN LOCATIONS OF SECURITY AND DATA DEVICES REQUIRED UNDER THIS CONTRACT.
5. SEE MOTOR CONNECTION SCHEDULE ON SHEET E401 FOR WIRE, CONDUIT, AND DISCONNECT SIZES AND BRANCH CIRCUIT CONNECTION FOR PLUMBING AND MECHANICAL EQUIPMENT REQUIRING POWER.

KEYED NOTES E201	
1	PROVIDE 120V, TOGGLE DISCONNECT SWITCH FOR EWH-2, COORDINATE LOCATION IN FIELD WITH INSTALLER, 2#12, #12GND, 1/2"C. TO CIRCUIT INDICATED.
2	PROVIDE J/BOX FOR 120V CONNECTION FOR SECURITY CAMERA. REFER TO TECHNOLOGY DRAWINGS FOR MORE INFORMATION.
3	PROVIDE 120V CONNECTION TO MOTORIZED BLINDS, COORDINATE SWITCH LOCATION WITH ARCHITECT AND OWNER'S REPRESENTATIVE.
4	PROVIDE DUAL SERVICE FLOOR BOX FOR CONNECTION TO RFID EQUIPMENT. REFER TO GENERAL NOTE 2, THIS SHEET. COORDINATE LOCATION WITH ARCHITECT PRIOR TO ROUGH-IN.
5	ROUTE CIRCUIT DOWN COLUMN AND IN SLAB AND STUB UP 12" AFF BELOW PANEL INDICATED.
6	PROVIDE 240V, 2P TOGGLE DISCONNECT SWITCH FOR EWH-1, COORDINATE LOCATION IN FIELD WITH INSTALLER, 2#12, #12GND, 1/2"C. TO CIRCUIT INDICATED.
7	PROVIDE 120V, TOGGLE DISCONNECT SWITCH FOR RECIRC. PUMP, COORDINATE LOCATION IN FIELD WITH INSTALLER, 2#12, #12GND, 1/2"C. TO CIRCUIT INDICATED.
8	PROVIDE 120V RECEPTACLE OUTLET FOR PA SYSTEM, COORDINATE LOCATION IN FIELD WITH INSTALLER, 2#12, #12GND, 1/2"C. TO CIRCUIT INDICATED.
9	PROVIDE MOTOR RATED TOGGLE DISCONNECT SWITCH CONNECTION TO IU-1. 2#12, #12GND, 3/4"C. FROM OUTDOOR UNIT OU-1 IN MECHANICAL 135.
10	PROVIDE POKE - THRU WIREMOLD #8ATCPXX FLOOR OUTLET WITH QUAD POWER AND DATA JACKS. COORDINATE DEVICE MOUNTING PLATES AND TYPES WITH TECHNOLOGY INSTALLER. COLOR BY ARCHITECT
11	PROVIDE 120V CONNECTION TO AUTOMATIC DOORS. COORDINATE LOCATION WITH EQUIPMENT INSTALLER.
12	2#10, #10GND, 1/2"C.
13	PROVIDE RECEPTACLE OUTLET FOR ART LIGHTING FIXTURE CONTROLS, COORDINATE WITH OWNER'S REPRESENTATIVE FOR EXACT LOCATION PRIOR TO ROUGH-IN.
14	PROVIDE 120V CONNECTION TO MOTORIZED PROJECTOR LIFT AND PROJECTOR, COORDINATE LOCATION WITH ARCHITECTURAL REFLECTED CEILING PLAN. COORDINATE SWITCH LOCATION WITH ARCHITECT AND OWNER'S REPRESENTATIVE PRIOR TO ROUGH-IN. INSTALL PER MANUFACTURER'S INSTRUCTIONS. REFER TO SHEET T2.00.
15	PROVIDE 120V CONNECTION TO MOTORIZED PROJECTOR SCREEN, COORDINATE SWITCH LOCATION WITH ARCHITECT AND OWNER'S REPRESENTATIVE PRIOR TO ROUGH-IN. INSTALL PER MANUFACTURER'S INSTRUCTIONS. REFER TO SHEET T2.00.
16	RECEPTACLES TO BE MOUNTED ON EQUIPMENT RACK.
17	PROVIDE WALL MOUNTED CRUCIAL POWER PRODUCTS ECONOSINE 2 2100W EMERGENCY LIGHTING INVERTER FOR THE INTERIOR EGRESS LIGHTING. CONNECT WITH 2#12, #12GND, 1/2"C. TO PANEL 20A, 1P CIRCUIT BREAKER IN PANEL 'M1'.
18	PROVIDE 120V CONNECTION FOR FIRE/SMOKE DAMPER, COORDINATE WITH INSTALLER FOR EXACT LOCATION, 2#12, #12GND, 1/2"C. TO CIRCUIT INDICATED. PROVIDE HANDLE LOCKING DEVICE.

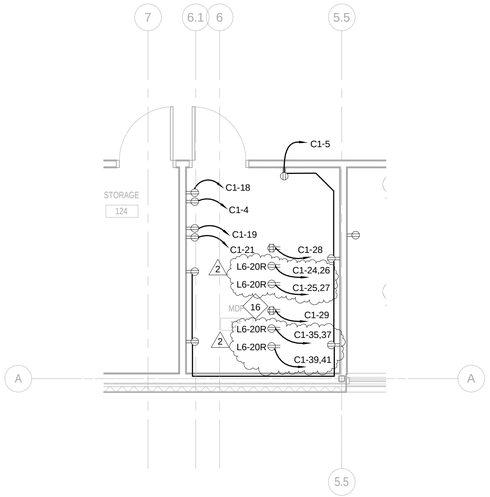

2 ENLARGED MDF ROOM - POWER/SIGNAL
1/4" = 1'-0"

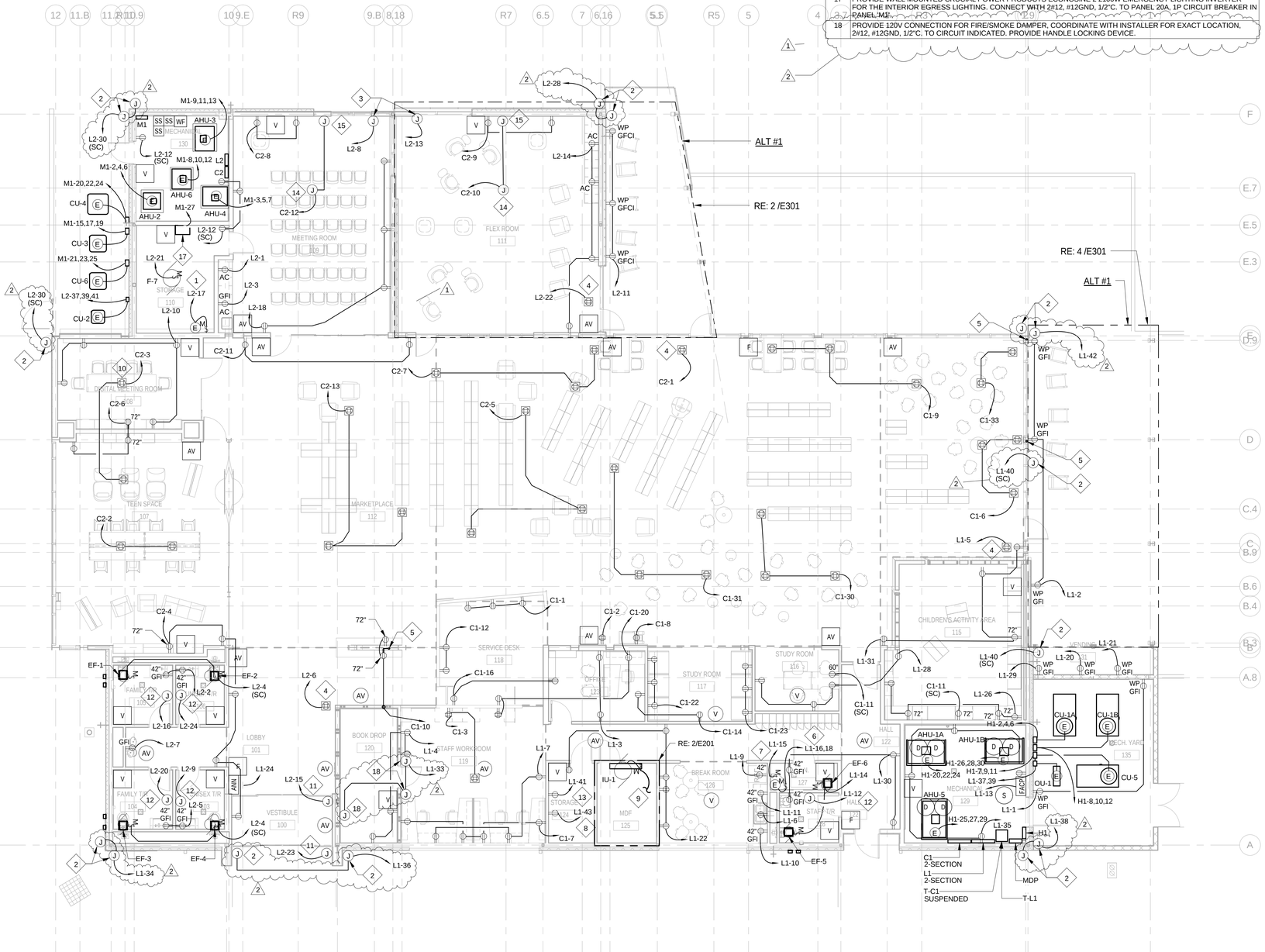

1 LEVEL 1 - FLOOR PLAN - POWER/SIGNAL
1/8" = 1'-0"

LPA
t. 210.829.1730
e. lpa@painc.com
p. 210.829.1737
w. ecolpa.com
114 East Cevallos Street
San Antonio, Texas 78204

STATE OF TEXAS
ALBERTO E. MARTINEZ
102236
PROFESSIONAL ENGINEER
10/17/14

H2MG
Consulting Mechanical • Electrical • Plumbing Engineers
7848 Louis Pill, Suite 115
San Antonio, Texas 78213
Tel: 210.525.0220
Fax: 210.525.0224
Texas Firm Registration #F-12003

Copyright © 2014

DISTRICT 2 BRANCH LIBRARY

U.S. HWY 87, SAN ANTONIO, TEXAS 78222

Developed for CITY OF SAN ANTONIO

This and all other project documents and all ideas, designs, and concepts incorporated therein are the property of LPA and shall not be used for any purpose not agreed to in writing by LPA and LPA's consultants. LPA and LPA's consultants make no representations or warranties of any kind, express or implied, with respect to any of the documents or any part thereof, including but not limited to any implied warranties of fitness for a particular purpose or merchantability. LPA and LPA's Consultants to the maximum legal extent shall not be liable for any damages, including, but not limited to, special or consequential damages, arising out of, or resulting from, the use of the documents by other persons or entities for any purpose other than that for which they were prepared. LPA and LPA's Consultants shall not be responsible for any modifications to the documents made by persons or entities other than LPA and LPA's Consultants. LPA and LPA's Consultants shall not be responsible for any electronic media that may be corrupted during transmittal or reception or converted to other formats by other persons or entities. LPA and LPA's Consultants shall not be responsible for any discrepancies between project documents and existing building conditions.

© Copyright 2014

Revision	Date
1 ADDENDUM 1	11-07-14
2 ADDENDUM 4	11-24-14

AEM

Submittal	Date

Job. No.	12021
Date	OCTOBER 17, 2014
Checked by	AEM
Scale	As indicated

LEVEL 1 - FLOOR PLAN POWER/SIGNAL

E201

FEEDER/BRANCH CIRCUIT SCHEDULE

MARK	CONDUIT SIZE	PHASE CONDUCTORS	NEUTRAL CONDUCTORS	GROUND CONDUCTORS	NOTES
E1	(2) 3"C.	3#350KCMIL	1#350KCMIL	#1	600A SERVICE
E2	1 1/4"C.	3#3	1#3	#8	100A FEEDER
E3	1 1/2"C.	3#1	1#1	#6	125A FEEDER
E4	2 1/2"C.	3#4/0	1#4/0	#4	225A FEEDER
E5	1 1/2"C.	3#1/0	NONE	#6	75KVA PRIMARY
E6	2 1/2"C.	3#4/0	1#4/0	#4	75KVA SECONDARY
E7	3 1/2"C.	3#300KCMIL	2#300KCMIL	2#4	HMT 75KVA SECONDARY
E8	(2) 3"C.	3#350KCMIL	1#350KCMIL	NONE	600A SERVICE

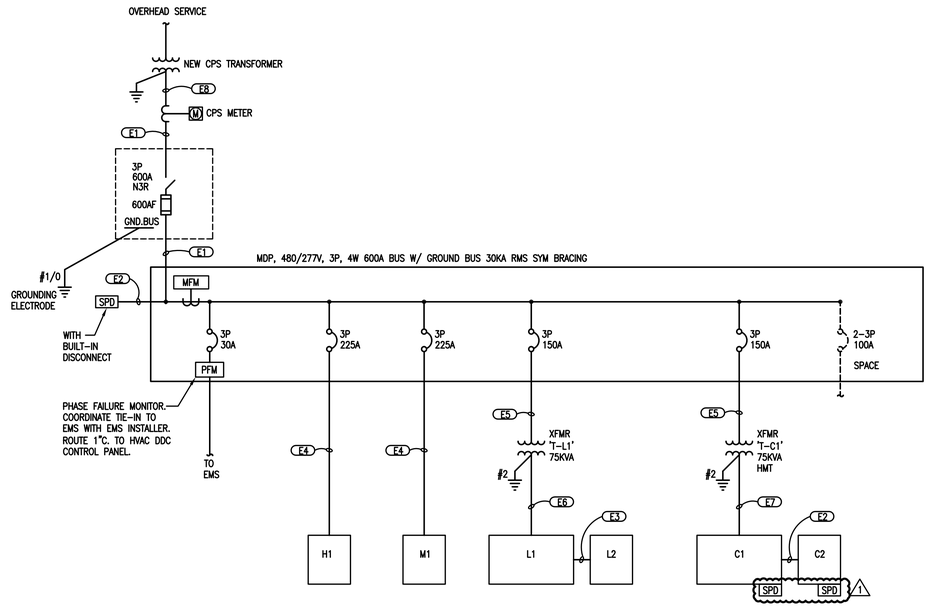

1 E401 ONE-LINE DIAGRAM - ELECTRICAL

SCALE: NTS

ELECTRICAL LOAD ANALYSIS
DISTRICT 2 BRANCH LIBRARY

SERVICE VOLTAGE : 480Y277V, 3 PHASE, 4 WIRE
OCCUPANCY : LIBRARY

LOAD DESCRIPTION	CONN LOAD KVA	DIV. %	DESIGN LOAD KVA	REMARKS
1 LIGHTS				
(a) CONNECTED LOADS	19.81	125%	0.00	
(b) 12000 SF X 3.5 VA/SF(220.12)	42.00	125%	52.50	Code larger than connected N.E.C.
2 RECEPTACLES	42.70		26.35	First 10KVA + 50% Remaining N.E.C. Article 220-13
3 HVAC LOADS	263.62		263.62	
4 MISC. EQUIPMENT				
(a) EDF	1.20		1.20	
(b) EWH-1,2	4.50	125%	5.63	N.E.C. Article 220-13
(c) OTHER	56.10		56.10	
5 25% LARGEST MOTOR 25% x 45 Amp x0.480x1.732	9.35		9.35	
6 FUTURE CAPACITY	80.00		80.00	
SUBTOTAL	5.19 KVA		494.74 KVA	595.10 AMP.
PROPOSED SERVICE CAPACITY AT 480Y277V			499 KVA	600 AMP.

TM

MOTOR CONNECTION SCHEDULE

EQUIPMENT	HEAT(KW)	VOLTS/PH	HP/KW/MCA	WIRE & CONDUIT SIZES	DISC. SWITCH	STARTER W/HOA	BRANCH CKT	NOTES
AHU-1A	32KW	480/3	45.1A	3#6, 1#10 GND, 1"C.	DISCONNECT IN PANEL	SINGLE POINT CONNECTION	H1-20,22,24	3,4
AHU-1B	32KW	480/3	45.1A	3#6, 1#10 GND, 1"C.	DISCONNECT IN PANEL	SINGLE POINT CONNECTION	H1-26,28,30	3,4
AHU-2	6KW	480/3	8.8A	3#12, 1#12 GND, 1/2"C.	DISCONNECT IN PANEL	SINGLE POINT CONNECTION	M1-2,4,6	3,4
AHU-3	11KW	480/3	15.9A	3#10, 1#10 GND, 1/2"C.	DISCONNECT IN PANEL	SINGLE POINT CONNECTION	M1-3,5,7	3,4
AHU-4	11KW	480/3	15.9A	3#10, 1#10 GND, 1/2"C.	DISCONNECT IN PANEL	SINGLE POINT CONNECTION	M1-9,11,13	3,4
AHU-5	26KW	480/3	37.9A	3#8, 1#10 GND, 3/4"C.	DISCONNECT IN PANEL	SINGLE POINT CONNECTION	H1-25,27,29	3,4
AHU-6	11KW	480/3	15.9A	3#10, 1#10 GND, 1/2"C.	DISCONNECT IN PANEL	SINGLE POINT CONNECTION	M1-8,10,12	3,4
CU-1A	N/A	480/3	27.0A	3#8, 1#10 GND, 3/4"C.	600V,60A,3P,NF,NEMA 3R	N/A	H1-2,4,6	3
CU-1B	N/A	480/3	27.0A	3#8, 1#10 GND, 3/4"C.	600V,60A,3P,NF,NEMA 3R	N/A	H1-8,10,12	3
CU-2	N/A	208/3	17.6A	3#10, 1#10 GND, 1/2"C.	240V,30A,3P,NF,NEMA 3R	N/A	L2-37,39,41	3
CU-3	N/A	480/3	10.6A	3#12, 1#12 GND, 1/2"C.	600V,30A,3P,NF,NEMA 3R	N/A	M1-15,17,19	3
CU-4	N/A	480/3	10.6A	3#12, 1#12 GND, 1/2"C.	600V,30A,3P,NF,NEMA 3R	N/A	M1-20,22,24	3
CU-5	N/A	480/3	17.0A	3#10, 1#10 GND, 1/2"C.	600V,30A,3P,NF,NEMA 3R	N/A	H1-7,9,11	3
CU-6	N/A	480/3	10.6A	3#12, 1#12 GND, 1/2"C.	600V,30A,3P,NF,NEMA 3R	N/A	M1-21,23,25	3
IU-1	-	-	-	-	240V,30A,2P,NF,NEMA 1	NA	L1-17,19	5
OU-1	N/A	208/1	21A	3#10,#10GND IN 1/2"C	240V,30A,2P,NF,NEMA 3R	N/A	L1-17,19	5
F-1	N/A	120/1	150W	2#12, 1#12 GND, 1/2"C.	120V,20A,1P,MMS	N/A	L2-4	2,3
F-2	N/A	120/1	150W	2#12, 1#12 GND, 1/2"C.	120V,20A,1P,MMS	N/A	L2-4	2,3
F-3	N/A	120/1	150W	2#12, 1#12 GND, 1/2"C.	120V,20A,1P,MMS	N/A	L2-4	2,3
F-4	N/A	120/1	150W	2#12, 1#12 GND, 1/2"C.	120V,20A,1P,MMS	N/A	L2-4	2,3
F-5	N/A	120/1	150W	2#12, 1#12 GND, 1/2"C.	120V,20A,1P,MMS	N/A	L1-14	2,3
F-6	N/A	120/1	150W	2#12, 1#12 GND, 1/2"C.	120V,20A,1P,MMS	N/A	L1-14	2,3
F-7	N/A	120/1	1/6HP	2#12, 1#12 GND, 1/2"C.	120V,20A,1P,MMS,WP	N/A	L2-21	2,3
EWH-1	N/A	208/1	3KW	2#12, 1#12 GND, 1/2"C.	240V,30A,2P,NF,NEMA 1	N/A	L1-16,18	
EWH-2	N/A	120/1	1.5KW	2#12, 1#12 GND, 1/2"C.	120V,20A,1P,MMS	N/A	L2-17	2
HWRP-1	N/A	120/1	1/20HP	2#12, 1#12 GND, 1/2"C.	120V,20A,1P,MMS	N/A	L1-15	2

NOTES
1. ALL DISCONNECT SWITCHES W/ STARTERS SHALL BE OF COMBINATION DISC/STARTER TYPE.
2. MMS = MANUAL MOTOR STARTER MAY BE USED FOR SINGLE PHIASE LOADS
3. INTERLOCK PER MECHANICAL SCHEDULE AND SPECIFICATIONS.
4. DIV 23 SHALL PROVIDE SINGLE POINT POWER CONNECTION CONTROL PANEL.
5. CONDENSING UNIT FEEDS INTERIOR AC UNIT. CONNECT PER MFR WIRING DIAGRAM.

BINDING EDGE

LPA
t. 210.829.1730
e. lpa@lpainc.com
p. 210.829.1737
w. oculpa.com
114 East Cevallos Street
San Antonio, Texas 78204

STATE OF TEXAS
ALBERTO E. MARTINEZ
102236
LICENSED
PROFESSIONAL ENGINEER
10/13/14

H2MG
Consulting Mechanical • Electrical • Plumbing Engineers
7800 IH-10 West, Suite 375
San Antonio, Texas 78230
Bus: 210.525.0220
Fax: 210.525.0221
Texas Firm Registration #F-10003

Copyright © 2014

DISTRICT 2 BRANCH LIBRARY

U.S. HWY 87, SAN ANTONIO, TEXAS 78222

Developed for CITY OF SAN ANTONIO

This and all other project documents and all ideas, designs, arrangements and plans indicated or represented by these documents are the property of LPA and shall not be used by any person for any purpose not specifically agreed to in writing by LPA. Any reproduction or other use of these documents without the written permission of LPA, which includes, but is not limited to, the furnishing of copies to other persons, is not only unlawful but automatically blocks all future business with the offending party and will be prosecuted. LPA and LPA's Consultants to the maximum legal extent for any such violation of their respective rights, whether direct or indirectly from project-document misuse.

Project documents describe design intent of work and are not to be construed as a guarantee of existing conditions and not to be substituted for as-built documents. Between project documents and the existing conditions, between project documents and the existing conditions, between project documents and the existing conditions. Between project documents and the existing conditions.

© Copyright 2014.

Submittal	Date	Revision	Date
		1 ADDENDUM 4	11-24-14

Job. No.	99022
Date	OCTOBER 17, 2014
Checked by	Staff
Scale	AS NOTED

ONE-LINE DIAGRAM - ELECTRICAL

E401

BINDING EDGE

PANELBOARD H1

VOLTAGE: 480Y/277 3 PHASE 4 WIRE
225A MAIN LUGS, NEMA 1
BUSES:225A ; NEUTRAL - 100%; EQUIPMENT GROUND.

LOCATION: MECH. 129
MOUNTING: SURFACE
Isc = 25kA RMS SYM BREAKERS

VA:L	VA:T	VA:A/C	VA:0	LOAD	BKR	CKT				CKT	BKR	LOAD	VA:L	VA:T	VA:AC	VA:0
1200				LEVEL 2 LIGHTING - 112	20/1	1	X			2	35/3	CU-1A			7470	
1520				LEVEL 2 LIGHTING - 112	20/1	3		X		4					7470	
1280				LEVEL 2 LIGHTING - 112	20/1	5			X	6					7470	
		4705		CU-5	25/3	7	X			8	35/3	CU-1B			7470	
		4705				9		X		10					7470	
		4705				11			X	12					7470	
2410				LTG - LEVEL 1	20/1	13	X			14	20/1	UNDERFLOOR LTG	650			
2000				EXTERIOR LTG.	20/1	15		X		16	20/1	LIGHTING VENDING - ALT #1	600			
600				MONUMENT SIGN	20/1	17			X	18	20/1	FLAGPOLE LTG	200			
200				EXIT LTG	20/1	19	X			20	60/3	AHU-1A			12490	
1269				SITE LTG.	20/1	21		X		22					12490	
1056				SITE LTG.	20/1	23			X	24					12490	
		10495		AHU-5	50/3	25	X			26	60/3	AHU-1B			12490	
		10495				27		X		28					12490	
		10495				29			X	30					12490	
				SPACE		31	X			32		SPACE				
				SPACE		33		X		34		SPACE				
				SPACE		35			X	36		SPACE				
				SPACE		37	X			38		SPACE				
				SPACE		39		X		40		SPACE				
				SPACE		41			X	42		SPACE				

VA:L (LIGHTING)	12985 CONNECTED	16231 DEMAND
VA:T (TRANSFORMER)	0 CONNECTED	0 DEMAND
VA:A/C(HVAC EQUIPT)	165360 CONNECTED	165360 DEMAND
VA:O (OTHER)	0 CONNECTED	0 DEMAND
VA: TOTAL	178345 CONNECTED	181591 DEMAND
AMPS: TOTAL	215 CONNECTED	218 DEMAND

L	T	A/C	O		TOTAL			
4460	0	55120	0	VA CONNECTED TO A PHASE	59580	VA =	215	AMPS CONNECTED TO A PHASE @ 277VOLTS
5389	0	55120	0	VA CONNECTED TO B PHASE	60509	VA =	218	AMPS CONNECTED TO B PHASE @ 277VOLTS
3136	0	55120	0	VA CONNECTED TO C PHASE	58256	VA =	210	AMPS CONNECTED TO C PHASE @ 277VOLTS
12985	0	165360	0	TOTAL	178345			
					178.345 KVA			

PANELBOARD L1

VOLTAGE: 208Y/120 3 PHASE 4 WIRE
225A MAIN CIRCUIT BREAKER
BUSES:225A; NEUTRAL - 100%; EQUIPMENT GROUND.

LOCATION: MECH. 129
MOUNTING: SURFACE
Isc = 10kA RMS SYM BRACING
FEED THRU LUGS

VA:L	VA:R	VA:A/C	VA:O	LOAD	BKR	CKT				CKT	BKR	LOAD	VA:L	VA:R	VA:AC	VA:O
	360			GFI - 135	20/1	1	X			2	20/1	ALT #1 - GFI - PATIO		540		
	360			R - 123	20/1	3		X		4	20/1	R - 119, 120		540		
			400	RFID - 112	20/1	5			X	6	20/1	GARB. DISP. - 126				1000
	900			R - 119	20/1	7	X			8	20/1	EXTERIOR LED SIGN - NW	500			
			800	REFRIG. 126	20/1	9		X		10	20/1	MICROWAVE - 126				1200
			1000	COFFEE - 126	20/1	11			X	12	30/1	HAND DRYER - 128				2880
			400	FACP	20/1	13	X			14	20/1	EXHAUST FAN - 127, 128			300	
			200	RECIRC PUMP - 127	20/1	15		X		16	20/2	EWH - 1 - 127				1500
				SPARE	20/1	17			X	18						1500
				SPARE	20/1	19	X			20	20/1	VENDING - 131				600
	600			VENDING - 131	20/1	21		X		22	20/1	RECEPT. - 126, 122		720		
1200	1260	2160	8280	PANEL 'L2'	150/3	23			X	24	20/1	R -115, 116		720		
100	1300	2690	9760			25	X			26	20/1	R - 115, 116		720		
0	2340	2160	8480			27		X		28	20/1	R - HALL 122		720		
	600			VENDING 131	20/1	29			X	30	20/1	R - HALL 122		720		
	720			R - 112, 115	20/1	31	X			32	20/1	LIGHTING CONTACTOR	100			
			100	FSD'S	20/1	33		X		34	20/1	SECURITY CAMERAS				200
	720			R - 129	20/1	35			X	36	20/1	SECURITY CAMERAS				200
		2184		OU-1 / IU-1	25/2	37	X			38	20/1	SECURITY CAMERAS				200
		2184				39		X		40	20/1	SECURITY CAMERAS				200
400				ART LTG. CONTROLLER - 124	20/1	41			X	42	20/1	SECURITY CAMERAS				200
			600	PA SYSTEM - 124	20/1	43	X			44	20/1	SPARE				
				SPARE	20/1	45		X		46	20/1	SPARE				
				SPARE	20/1	47			X	48	20/1	SPARE				
122				LTG - CHILDRENS ACTIVITY		49	X			50		SPACE				
				SPACE		51		X		52		SPACE				
				SPACE		53			X	54		SPACE				
				SPACE		55	X			56		SPACE				
				SPACE		57		X		58		SPACE				
				SPACE		59			X	60		SPACE				

VA:L (LIGHTING)	2422 CONNECTED	3028 DEMAND
VA:R (RECEPTACLES)	13840 CONNECTED	11920 DEMAND
VA:A/C(HVAC)	11678 CONNECTED	11678 DEMAND
VA:O (OTHER)	39700 CONNECTED	39700 DEMAND
VA: TOTAL	67640 CONNECTED	66326 DEMAND
AMPS: TOTAL	188 CONNECTED	184 DEMAND

L	R	A/C	O		TOTAL			
822	4540	5174	11560	VA CONNECTED TO A PHASE	22096	VA =	184	AMPS CONNECTED TO A PHASE @ 120 VOLTS
0	5280	4344	12680	VA CONNECTED TO B PHASE	22304	VA =	186	AMPS CONNECTED TO B PHASE @ 120 VOLTS
1600	4020	2160	15460	VA CONNECTED TO C PHASE	23240	VA =	194	AMPS CONNECTED TO C PHASE @ 120 VOLTS
2422	13840	11678	39700	TOTAL	67640			

PANELBOARD C1

VOLTAGE: 208Y/120 3 PHASE 4 WIRE
225A MAIN CIRCUIT BREAKER
BUSES:225A; NEUTRAL - 200%; EQUIPMENT GROUND.

LOCATION: MECH. 129
MOUNTING: SURFACE
Isc = 10kA RMS SYM BRACING
FEED THRU LUGS

VA:L	VA:R	VA:A/C	VA:O	LOAD	BKR	CKT				CKT	BKR	LOAD	VA:L	VA:R	VA:AC	VA:O
	540			R - 118	20/1	1	X			2	20/1	PRINTER - 112				1000
	760			FLOOR BOX - 119	20/1	3		X		4	20/1	MDF - 125				1200
	900			MDF - 125	20/1	5			X	6	20/1	FLOOR BOXES - 112		1200		
	1200			COMP. 119	20/1	7	X			8	20/1	COPIER - 112				1600
	1200			FLOOR BOX	20/1	9		X		10	20/1	R - 112, 119, TV'S		1380		
	1600			R - 115, 116	20/1	11			X	12	20/1	R - 118		800		
0	4000	0	400	PANEL 'C2'	100/3	13	X			14	20/1	R - 123, 117		800		
0	3100	0	1200			15		X		16	20/1	R - 123, CIRC		800		
0	3380	0	1200			17			X	18	20/1	MDF - 125				1200
			1200	MDF - 125	20/1	19	X			20	20/1	R - 123, 119		1200		
			1200	MDF - 125	20/1	21		X		22	20/1	R - 117		1200		
	1200			R - 117	20/1	23			X	24	20/2	MDF - 125				1200
			1200	MDF - 125	20/2	25	X			26						1200
			1200			27		X		28	20/1	MDF - 125				1200
			1200	MDF - 125	20/1	29			X	30	20/1	FLOOR BOXES - 112		1200		
	1200			FLOOR BOX - 112	20/1	31	X			32	20/1	SPARE				
	1200			FLOOR BOX - 112	20/1	33		X		34	20/1	SPARE				
			1200	MDF - 125	20/2	35			X	36	20/1	SPARE				
			1200			37	X			38	20/1	SPARE				
			1200	MDF - 125	20/2	39		X		40	20/1	SPARE				
			1200			41			X	42	20/1	SPARE				
				SPARE	20/1	43	X			44	20/1	SPARE				
				SPARE	20/1	45		X		46	20/1	SPARE				
				SPARE	20/1	47			X	48	20/1	SPARE				
				SPACE		49	X			50		SPACE				
				SPACE		51		X		52		SPACE				
				SPACE		53			X	54		SPACE				
				SPACE		55	X			56	60/3	SPD				
				SPACE		57		X		58						
				SPACE		59			X	60						

VA:L (LIGHTING)	0 CONNECTED	0 DEMAND
VA:R (RECEPTACLES)	28860 CONNECTED	19430 DEMAND
VA:A/C(HVAC)	0 CONNECTED	0 DEMAND
VA:O (OTHER)	22200 CONNECTED	22200 DEMAND
VA: TOTAL	51060 CONNECTED	41630 DEMAND
AMPS: TOTAL	142 CONNECTED	116 DEMAND

L	R	A/C	O		TOTAL			
0	8940	0	7800	VA CONNECTED TO A PHASE	16740	VA =	140	AMPS CONNECTED TO A PHASE @ 120 VOLTS
0	9640	0	7200	VA CONNECTED TO B PHASE	16840	VA =	140	AMPS CONNECTED TO B PHASE @ 120 VOLTS
0	10280	0	7200	VA CONNECTED TO C PHASE	17480	VA =	146	AMPS CONNECTED TO C PHASE @ 120 VOLTS
0	28860	0	22200	TOTAL	51060			

PANELBOARD M1

VOLTAGE: 480Y/277 3 PHASE 4 WIRE
225A MAIN LUGS
BUSES:225A ; NEUTRAL - 100%; EQUIPMENT GROUND.

LOCATION: MECH. RM. 130
MOUNTING: SURFACE
Isc = 25kA RMS SYM BREAKERS

VA:L	VA:T	VA:A/C	VA:0	LOAD	BKR	CKT				CKT	BKR	LOAD	VA:L	VA:T	VA:AC	VA:0
3000				LTG - 130, 110,111	20/1	1	X			2	20/3	AHU-2			2443	
		4414		AHU-3	30/3	3		X		4					2443	
		4414				5			X	6					2443	
		4414				7	X			8	30/3	AHU-6			4414	
		4414		AHU-4 (ALT #1)	30/3	9		X		10					4414	
		4414				11			X	12					4414	
		4414				13	X			14		SPACE				
		2936		CU-3	15/3	15		X		16		SPACE				
		2936				17			X	18		SPACE				
		2936				19	X			20	15/3	CU-4 (ALT #1)			2936	
		7302		CU-6	45/3	21		X		22					2936	
		7302				23			X	24					2936	
		7302				25	X			26		SPACE				
1400				LIGHTING INVERTER - 110	20/1	27		X		28		SPACE				
				SPACE		29			X	30		SPACE				
				SPACE		31	X			32		SPACE				
				SPACE		33		X		34		SPACE				
				SPACE		35			X	36		SPACE				
				SPACE		37	X			38		SPACE				
				SPACE		39		X		40		SPACE				
				SPACE		41			X	42		SPACE				

VA:L (LIGHTING)	4400 CONNECTED	5500 DEMAND
VA:T (TRANSFORMER)	0 CONNECTED	0 DEMAND
VA:A/C(HVAC EQUIPT)	86577 CONNECTED	86577 DEMAND
VA:O (OTHER)	0 CONNECTED	0 DEMAND
VA: TOTAL	90977 CONNECTED	92077 DEMAND
AMPS: TOTAL	109 CONNECTED	111 DEMAND

L	T	A/C	O		TOTAL			
3000	0	28859	0	VA CONNECTED TO A PHASE	31859	VA =	115	AMPS CONNECTED TO A PHASE @ 277VOLTS
1400	0	28859	0	VA CONNECTED TO B PHASE	30259	VA =	109	AMPS CONNECTED TO B PHASE @ 277VOLTS
0	0	28859	0	VA CONNECTED TO C PHASE	28859	VA =	104	AMPS CONNECTED TO C PHASE @ 277VOLTS
4400	0	86577	0	TOTAL	90977			
					90.977 KVA			

PANELBOARD L2

VOLTAGE: 208Y/120 3 PHASE 4 WIRE
225A MAIN LUGS
BUSES:225A; NEUTRAL - 100%; EQUIPMENT GROUND.

LOCATION: MECH. 130
MOUNTING: SURFACE
Isc = 10kA RMS SYM BRACING

VA:L	VA:R	VA:A/C	VA:O	LOAD	BKR	CKT				CKT	BKR	LOAD	VA:L	VA:R	VA:AC	VA:O
	180			RECEPT - 109	20/1	1	X			2	20/1	R - T/R'S 105, 106		360		
	180			RECEPT - 109	20/1	3		X		4	20/1	EF-1,2 - 105, 106				600
	360			R - T/R'S 103, 104	20/1	5			X	6	20/1	RFID - 112				400
			600	EDF - 101	20/1	7	X			8	20/1	MOTORIZED SHADES - 109				1200
			2880	HAND DRYER - 103	30/1	9		X		10	20/1	RECEPT - 108		720		
	540			GFI'S - 133 - ALT #1	20/1	11			X	12	20/1	R - 109, 110, 130		720		
			1200	MOTORIZED SHADES-111-ALT #1	20/1	13	X			14	20/1	RECEPR. 111 - ALT #1		720		
			1000	AUTOMATIC DOORS	20/1	15		X		16	30/1	HAND DRYER - 105				2880
			1500	EWH-2 - 110	30/1	17			X	18	20/1	RECEPT - 109		720		
600				ART LTG FIXT.	20/1	19	X			20	30/1	HAND DRYER - 104				2880
		530		F-7 - UNDERFLOOR FAN	20/1	21		X		22	20/1	FLOOR BOX - 111		400		
			1000	AUTOMATIC DOORS	20/1	23			X	24	30/1	HAND DRYER - 106				2880
			2400	MOTOR. PARTITION -109 (ALT#1)	30/3	25	X			26	20/1	ART LTG FIXT. - 112	600			
			2400			27		X		28	20/1	LIGHTING CONTACTOR	100			
			2400			29			X	30	20/1	SECURITY CAMERAS				300
				SPARE	20/1	31	X			32	20/1	SPARE				
				SPARE	20/1	33		X		34	20/1	SPARE				
				SPARE	20/1	35			X	36	20/1	SPARE				
		2160		CU-2	30/3	37	X			38		SPACE				
		2160				39		X		40		SPACE				
		2160				41			X	42		SPACE				

VA:L (LIGHTING)	1300 CONNECTED	1625 DEMAND
VA:R (RECEPTACLES)	4900 CONNECTED	4900 DEMAND
VA:A/C(HVAC)	7010 CONNECTED	7010 DEMAND
VA:O (OTHER)	26520 CONNECTED	26520 DEMAND
VA: TOTAL	39730 CONNECTED	40055 DEMAND
AMPS: TOTAL	110 CONNECTED	111 DEMAND

L	R	A/C	O		TOTAL			
1200	1260	2160	8280	VA CONNECTED TO A PHASE	12900	VA =	108	AMPS CONNECTED TO A PHASE @ 120 VOLTS
100	1300	2690	9760	VA CONNECTED TO B PHASE	13850	VA =	115	AMPS CONNECTED TO B PHASE @ 120 VOLTS
0	2340	2160	8480	VA CONNECTED TO C PHASE	12980	VA =	108	AMPS CONNECTED TO C PHASE @ 120 VOLTS
1300	4900	7010	26520	TOTAL	39730			

PANELBOARD C2

VOLTAGE: 208Y/120 3 PHASE 4 WIRE
125A MAIN LUGS
BUSES:125A; NEUTRAL - 200%; EQUIPMENT GROUND.

LOCATION:MECH. RM 130
MOUNTING: SURFACE
Isc = 10kA RMS SYM BRACING

VA:L	VA:R	VA:A/C	VA:O	LOAD	BKR	CKT				CKT	BKR	LOAD	VA:L	VA:R	VA:AC	VA:O
			400	RFID - 112	20/1	1	X			2	20/1	FLOOR BOXES - 107		800		
	800			FLOOR BOXES - 107, 108	20/1	3		X		4	20/1	R - 100, 101, 107		1500		
	1200			FLOOR BOXES - 112	20/1	5			X	6	20/1	R - 107, 108		1380		
	1200			FLOOR BOXES - 112	20/1	7	X			8	20/1	R - 109		800		
	800			R - 111 (ALT #1)	20/1	9		X		10	20/1	PROJ. LIFT/SCREEN - 111 (ALT#1)				1200
	800			R - 112	20/1	11			X	12	20/1	PROJ. LIFT/SCREEN - 109				1200
	1200			FLOOR BOXES - 112	20/1	13	X			14	20/1	SPARE				
				SPARE	20/1	15		X		16	20/1	SPARE				
				SPARE	20/1	17			X	18	20/1	SPARE				
				SPARE	20/1	19	X			20	20/1	SPARE				
				SPARE	20/1	21		X		22	20/1	SPARE				
				SPARE	20/1	23			X	24	20/1	SPARE				
				SPACE		25	X			26		SPACE				
				SPACE		27		X		28		SPACE				
				SPACE		29			X	30		SPACE				
				SPACE		31	X			32		SPACE				
				SPACE		33		X		34		SPACE				
				SPACE		35			X	36		SPACE				
				SPACE		37	X			38	60/3	SPD				
				SPACE		39		X		40						
				SPACE		41			X	42						

VA:L (LIGHTING)	0 CONNECTED	0 DEMAND
VA:R (RECEPTACLES)	10480 CONNECTED	10240 DEMAND
VA:A/C(HVAC)	0 CONNECTED	0 DEMAND
VA:O (OTHER)	2800 CONNECTED	2800 DEMAND
VA: TOTAL	13280 CONNECTED	13040 DEMAND
AMPS: TOTAL	37 CONNECTED	36 DEMAND

L	R	A/C	O		TOTAL			
0	4000	0	400	VA CONNECTED TO A PHASE	4400	VA =	37	AMPS CONNECTED TO A PHASE @ 120 VOLTS
0	3100	0	1200	VA CONNECTED TO B PHASE	4300	VA =	36	AMPS CONNECTED TO B PHASE @ 120 VOLTS
0	3380	0	1200	VA CONNECTED TO C PHASE	4580	VA =	38	AMPS CONNECTED TO C PHASE @ 120 VOLTS
0	10480	0	2800	TOTAL	13280			

LPA
p. 210.829.1737
w. ocolpa.com
f. 210.829.1730
e. lpa@lpainc.com
114 East Cevallos Street
San Antonio, Texas 78204

STATE OF TEXAS
ALBERTO E. MARTINEZ
102236
LICENSED
PROFESSIONAL ENGINEER
10/17/14

H2MG
Consulting Mechanical • Electrical • Plumbing Engineers
70 NE Loop 410, Suite 1075
San Antonio, Texas 78216
Tele: 210.525.0220
Fax: 210.525.0225
Texas Firm Registration #F-12003
Copyright © 2014

DISTRICT 2 BRANCH LIBRARY

U.S. HWY 87, SAN ANTONIO, TEXAS 78222

Developed for
CITY OF SAN ANTONIO

This and all other project documents and all ideas, aesthetics and designs incorporated therein are instruments of service. All project documents are the registered property of LPA, INC. (LPA) and cannot be lawfully used in whole or in part for any project or purpose except as described in the contractual agreement between LPA and Client. LPA hereby gives formal notice that any such project document use, reproduction or modification (misuse) is not only unlawful but automatically binds all parties involved with misuse to fully indemnify and defend LPA and LPA's Consultants to the maximum legal extent against all losses, demands, claims or liabilities arising directly or indirectly from project document misuse.

Project documents describe design intent of work and are not a representation of as-built or existing conditions. LPA and LPA's Consultants make no representations concerning the accuracy of documents and are not responsible for any discrepancies between project documents and the existing conditions.

© Copyright 2014

Submittal	Date	Revision	Date
	AM	1 ADDENDUM 4	11-24-14

Job. No.	99022
Date	OCTOBER 17, 2014
Checked by	Staff
Scale	AS NOTED

ELECTRICAL PANEL SCHEDULES

E501