**ADDENDUM NO. 1**

PROJECT NAME: **2017-2018 TASK ORDER CONTRACT FOR FLATWORK AND STREET IMPROVEMENTS PACKAGE 19**

**– 23-01472-05-03**

DATE: 9/09/2016

ADDENDUM NO. 1

This addendum should be included in and be considered part of the plans and specifications for the name of the project. The contractor shall be required to sign an acknowledgement of the receipt of this addendum and submit with their bid.

---

1. **Remove and Replace the following:**
   A. Supplemental Specification 14, "Premium Landscaping"
   B. Asphalt Repair & Curb Construction Details for Flatwork Only Projects

2. **Meeting Agenda:**
   A. Flatwork
      1. Curb, sidewalk, retaining walls, driveways, wheelchair ramps, etc.
         i. Use City of San Antonio standard details and revised standards in contract documents
         ii. Review special provisions to construction specifications in contract documents

   B. Additional Mobilization
      1. See Project Description for clarification

   C. No direct payment for the following items:
      1. Mobilization (Item 100)
      2. Insurance & Bond (Item 100)
         i. Performance & Payment Bond included in no direct payment
      3. Preparing Right-of-Way (Item 101)
      4. Barricades, Signs & Traffic Handling (Item 530)
         i. See special provision to Item 530 for flashing arrow board and TMA
      5. Temporary Erosion, SWPPP (Item 540)
         i. Items not included on the 025 Unit Pricing Form will not receive compensation

D. Miscellaneous Work
    1. Tree removal, pruning, protection and replacement
    2. Gate/fence adjustments
    3. Pavement markings
    4. Asphalt Repair
        i. See asphalt repair and curb construction detail for flatwork only projects
    5. Sign/mailbox relocations
    6. Minor utility adjustments
        i. Meter box, valve box, manhole adjustments
        ii. Meter and meter box relocation
        iii. Customer shutoff, pressure reducing valve, backflow preventer relocation
        iv. Relocate fire hydrants
            a. must be SAWS approved contractor

E. General Notes & Traffic Notes
    1. Traffic control in accordance with MUTCD standards – developed by contractor
        i. Including traffic control design (detour routes if necessary), setup and implementation, and removal
        ii. See special provision to Item 530 for flashing arrow board and TMA
    2. Contractor must acquire Right-of-Way permits for each project location (no charge)
    3. Contractor awarded contract to provide material submittals in electronic format at time of pre-construction/kickoff meeting with City staff
        i. Work cannot begin until submittals are approved

F. Asphalt Repair & Curb Construction Details
    1. Contractor shall pay careful attention to subsidiary items relating to curb construction
    2. See special provision to Item 500, “Concrete Curb” for separate curb bid items
    3. Engineer or Project Manager overseeing construction to make final determination of asphalt repair limits

G. Working Restrictions
    1. City of San Antonio Traffic Engineering determines final working restrictions
        i. Reduced working times in school zones – no extra payment

H. TDLR inspection of projects (>$50,000) after construction is completed

1. Project will not be considered complete until the TDLR review has been approved and violations are corrected
2. For projects that receive TDLR violations, Contractor will not receive extra compensation for re-mobilization to correct violations, if the Contractor is at fault of the violation

I. Invoicing through City of San Antonio Primelink System

J. Schedules
   1. Contractor shall provide updated monthly project schedule at a minimum

**3. Pre-Bid Questions & Answers:**

A. Is it acceptable to contact SBEDA during bid process?
   1. Yes, the SBEDA office may be contacted during the bid process

B. Why 730 calendar days?
   1. 730 calendar days has been allotted to this contract. If the capacity is fully utilized before the calendar days is up, then the contract will expire.

**4. General:**

A. Refer to General Conditions Section 4.3.6 Claims for Additional Time for questions regarding inclement weather days.

B. Refer to form 060 Supplemental Conditions for information on liquidated damages.

9/9/2016

# SUPPLEMENTAL SPECIFICATION 14

## Premium Landscaping

**SUP 14.1 DESCRIPTION:** This item is to be used where the City requires landscape preservation and replacement.

**SUP 14.2 MATERIALS:** Provide materials necessary to conduct the work specified as directed by the City Project Manager and is of equal or better quality.

**SUP 14.3 EQUIPMENT:** Provide equipment necessary to conduct the work as required.

**SUP 14.4 CONSTRUCTION:** The City will direct Contractor when Premium Landscaping will be required and will be on a case-by-case basis. Contractor shall protect existing landscape and material within the right-of-way and take photo and video of existing conditions as required by general conditions. Contractor shall reinstall landscape material as per original condition, including addition of equal or better quality material due to change of grade, after substantial completion of project. Damaged material shall be replaced with material of equal or better quality. Protect trees and shrubbery utilizing tree protection standards included in this contract. Reinstall irrigation as required if property is equipped with existing irrigation and backflow preventer.

**SUP 14.5 MEASUREMENT:** Premium Landscaping will be measured by the square yard. Protection installed for trees and shrubbery will not be measured under this item, rather, shall utilize tree protection bid items within this contract. Protection of existing landscape material, storage and reinstallation of same material including new material is considered subsidiary to this bid item. Material damaged by construction operations shall be replaced with equal or better quality at no additional cost to the City. Topsoil and Sod installation will not be measured under this item, but will be measured under their appropriate bid items within this contract. Irrigation reinstallation will not be measured under this item, but will be measured under the appropriate bid item within this contrac.

**SUP 14.6 PAYMENT:** The work performed as prescribed by this item will be paid for at the contract unit price bid per square yard for “Premium Landscaping” which price shall be full compensation for protection of existing landscape material, storage, new material of equal or better quality required due to grade change or damage to existing material, and reinstallation of existing material; for furnishing and placing all materials and for all labor, tools, equipment and incidentals necessary to complete the work.

**BID ITEM:**
SUP 14 – Premium Landscaping – per square yard (SY)

PAYMENT NOTE:

(*) NO DIRECT PAYMENT SHALL BE MADE FOR SAW CUTTING, TRENCHING, EXCAVATION, & FLEXIBLE BASE, FOR CONSTRUCTION OF CURB. ALL COST IN CONNECTION THEREWITH SHALL BE INCLUDED WITH THE UNIT PRICE OF CURB RAMPS AND CONCRETE CURB. ENGINEER OR PROJECT MANAGER TO MAKE FINAL DETERMINATION IF ASPHALT REPAIRS ARE REQUIRED, AND THE LIMITS OF THE REPAIR.

(**) IF EXISTING ACCEPTABLE BASE IS PRESENT UNDERNEATH PROPOSED CURB ALIGNMENT, THEN CURB MAY BE PLACED WITHOUT THE ADDITION OF NEW BASE. IF NO BASE IS PRESENT UNDERNEATH PROPOSED CURB, THEN A MINIMUM OF 6" FLEXIBLE BASE MUST BE INSTALLED DIRECTLY UNDERNEATH AND FOR A DISTANCE 1' BEHIND CURB. ALL COST INCURRED SHALL BE INCLUDED IN THE UNIT COST OF CONCRETE CURB.

## ASPHALT SAWCUT DETAIL

### SAW CUT AT CURB LINE

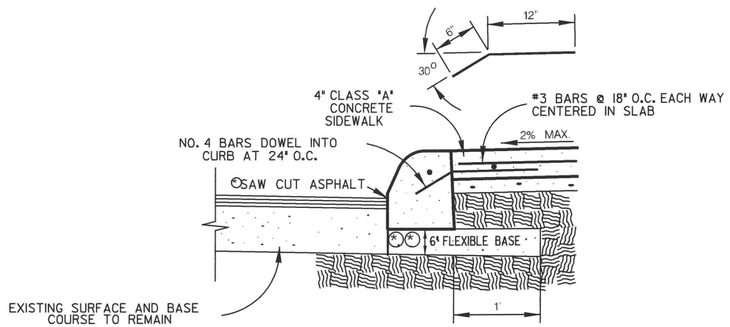


### CONCRETE SIDEWALK ABUTTING CURB SECTION

N.T.S.

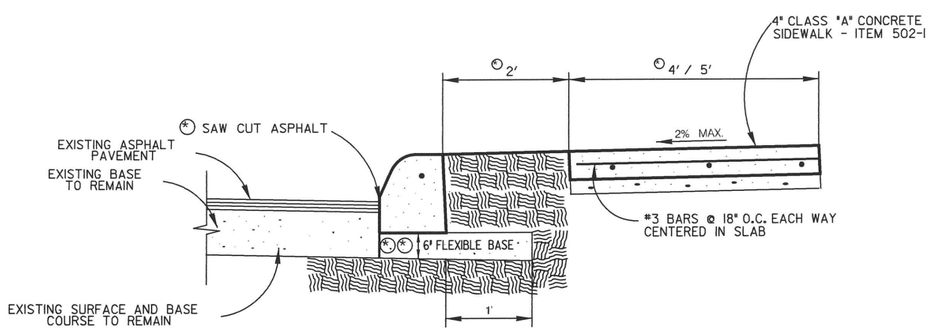


### CONCRETE SIDEWALK SEPARATE CURB SECTION

N.T.S.

(©) UNLESS OTHERWISE STATED ON PLANS

PAYMENT NOTE:

(*) NO DIRECT PAYMENT SHALL BE MADE FOR SAW CUTTING, TRENCHING FOR CONSTRUCTION OF CURB, EXCAVATION, ASPHALT REPAIR TO INCLUDE TACK COAT, AND FLEXIBLE BASE WITHIN 1' OF FACE OF CURB. ALL COST IN CONNECTION THEREWITH SHALL BE INCLUDED WITH THE UNIT PRICE OF CURB RAMPS AND CONCRETE CURB. ENGINEER OR PROJECT MANAGER TO MAKE FINAL DETERMINATION ON LIMITS OF ASPHALT REPAIR.

(**) IF EXISTING ACCEPTABLE BASE IS PRESENT UNDERNEATH PROPOSED CURB ALIGNMENT, THEN CURB MAY BE PLACED WITHOUT THE ADDITION OF NEW BASE. IF NO BASE IS PRESENT UNDERNEATH PROPOSED CURB, THEN A MINIMUM OF 6" FLEXIBLE BASE MUST BE INSTALLED DIRECTLY UNDERNEATH AND FOR A DISTANCE 1' BEHIND CURB. ALL COST INCURRED SHALL BE INCLUDED IN THE UNIT COST OF CONCRETE CURB.

## ASPHALT SAWCUT DETAIL

### SAW CUT 12" IN FRONT OF CURB LINE

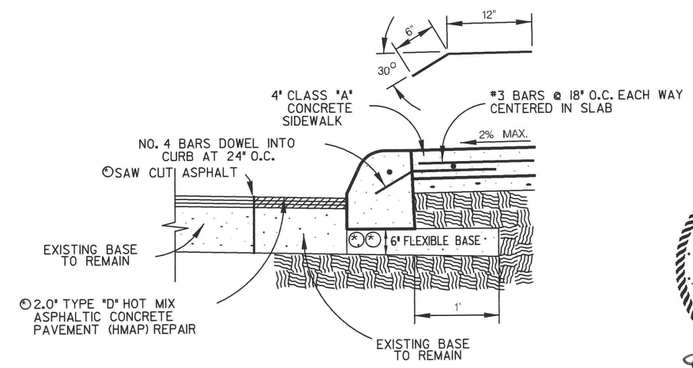


### CONCRETE SIDEWALK ABUTTING CURB SECTION

N.T.S.

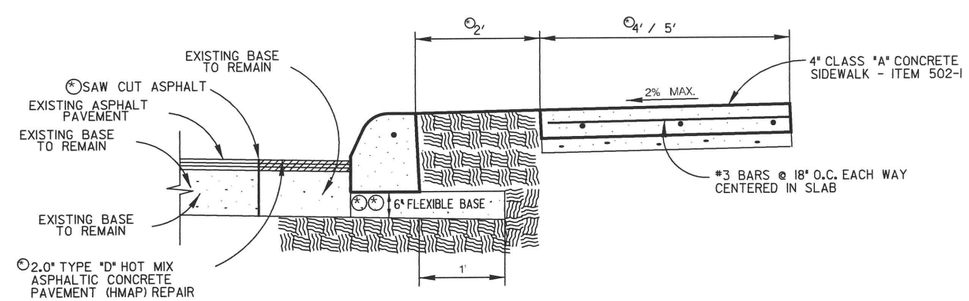


### CONCRETE SIDEWALK SEPARATE CURB SECTION

N.T.S.

(©) UNLESS OTHERWISE STATED ON PLANS

STATE OF TEXAS
STEPHEN J. ANIOL
112658
LICENSED PROFESSIONAL ENGINEER
9/9/2016

THESE DETAILS SHALL GOVERN THE LIMITS OF ASPHALT REPAIR AND BASE INSTALLATION ASSOCIATED WITH CONCRETE CURB FOR FLATWORK ONLY PROJECTS. FOR PROJECTS THAT REQUIRE PAVEMENT WIDENING, CONTRACTOR SHALL FOLLOW DETAILS OUTLINED IN MISCELLANEOUS CONSTRUCTION STANDARDS I. REGARDLESS OF APPLICATION, THE UNIT PRICE FOR CURB SHALL INCLUDE 1' OF 2" TYPE D HMAP.

Lockwood, Andrews & Newnam, Inc.
A LEO A DALY COMPANY

ASPHALT REPAIR AND CURB CONSTRUCTION DETAILS
FOR FLATWORK ONLY PROJECTS
FY 2017-2018 TASK ORDER CONTRACT FOR
FLATWORK & STREET IMPROVEMENT PROJECTS PACKAGE 19

9/9/2016 11:38:46 AM c:\projectwise\sjaniol\d0475506\Saw_Cut&Asphalt_Repair_Detail.dgn

CITY OF SAN ANTONIO
TRANSPORTATION & CAPITAL IMPROVEMENTS

**Note: Addenda Acknowledgement Form for Addendum 1 is attached herein. This form must be signed and submitted with the bid package.**

RECEIPT OF ADDENDUM NUMBER(S) **1** IS HEREBY ACKNOWLEDGED FOR PLANS AND SPECIFICATIONS FOR CONSTRUCTION OF THE **2017-2018 TASK ORDER CONTRACT FOR FLATWORK AND STREET IMPROVEMENTS PACKAGE 19 – 23-01472-05-03**

FOR WHICH BIDS WILL BE OPENED ON **TUESDAY, SEPTEMBER 13, 2016 AT 2:00 P.M.**

THIS ACKNOWLEDGEMENT MUST BE SIGNED AND RETURNED WITH THE BID PACKAGE.

Company Name: _____

Address: _____

City/State/Zip Code: _____

Date: _____

_____
Signature

_____
Print Name/Title