ADDENDUM NO. 03

CITY OF SAN ANTONIO
TRANSPORTATION & CAPITAL IMPROVEMENTS

PROJECT NAME: **36th St. Ph. IIIB (Billy Mitchell-Gen. Hudnell)**

BID DATE: **2:00 P.M. CST, on Tuesday, March 24, 2015**

PLACE: **Office of the City Clerk, City Hall, 100 Military Plaza, 2nd floor San Antonio, Texas 78205**

This addendum should be included in and be considered part of the plans and specifications for the above named project. The contractor shall be required to sign an acknowledgement of the receipt of this addendum and submit with their bid.

TCI PROJECT NO: **40-00287**

Questions and Responses

1. Questions: From Ryan Detry of EZ-Bel

36th Street Questions

1) Sheet 9 Item 2: What is the Contractor's Protocol for?
Response: Plan sheet 9, note G-2 was missing some text. See related item in this addendum to answer this question.

2) Sheet 9 Item 5-4A: Can we pick up disc at any time at no cost?
Response: Disk containing earthwork information can be obtained from the Engineer at no additional cost during normal business hours.

3) Sheet 10 Item 8-2: Can a project schedule for this project be provided?
Response: Yes.

4) Sheet 11 Item 462-1: Is this note referring to the Tongue and Groove Joint or the Longitudinal Space with MBC (Multi Box Culverts)?
Response: The note is referring to the space between barrels.

5) Removal items are listed and quantities are identified. Sheet 62-64 Note 6 indicates to mark limits prior to removal. If removal quantities exceed the quantities indicated on sheet 15, will the contractor be paid for those additional quantities?
Response: See notes at the bottom of the schedule on the Removal Summary plan sheet 15 and consider all removal quantities are provided for contractor's information only and bidder should verify information. Removal may also be part of and subsidiary to other items, such as along utility trenches, driveway replacement, and other work.

6) Pay Item 0110.2002.110 Channel Excavation. Does the quantity include the 4" of over excavation for topsoil?
Response: Yes.

7) Sheet 181 Planting Note #6 states metal edging is required, can a pay item be added for this?

Response: The metal edging and other items with two asterisks on plan sheet 25 are subsidiary to other landscape planting pay items. See related item in this addendum.

Traffic Signals Questions

1) Pay item be added to provide for the ILSN assemblies shown in the plans?
Response: Pay item added. See Attachment No. 1.

2) Pay item be added to provide for the salvage of the existing traffic signal?
Response: Pay item will not be added--traffic signal removal is subsidiary to Item 100 Preparing ROW. Also see plans sheet 9, General Notes, G-7 for additional information.

3) Will CPS be installing the electrical service for the traffic signals called for in the plans?
Response: No. The existing service pedestal is located on the southeast corner of the General Hudnell and Tinker intersection and it can be utilized for the new traffic signal, so a new pedestal or new CPS service should not be required. See addenda item for added note on plan sheet 130.

4) The pay items for the traffic signal poles show to install:

INS TRF SIG PL AM(S) 1 ARM (36') ILSN	EA	1.00

Plan sheet 130 shows to install the following pole (Pole D):

INS TRF SIG PL AM(S) 1 ARM (32') ILSN	EA	1.00

Please confirm which size pole is desired.

Response: Plan sheet 130 for "INS TRF SIG PL AM(S) 1 ARM (32') ILSN" is correct. See revised bid proposal this addendum.

5) The pay items for the signal section backplates show the following:

BACK PLATE (12IN) (3 SEC)	EA	9.00
BACK PLATE (12IN) (5 SEC)	EA	4.00

Plan sheet 130 shows to install the following backplates

BACK PLATE (12IN) (3 SEC)	EA	8.00
BACK PLATE (12IN) (4 SEC)	EA	4.00
BACK PLATE (12IN) (5 SEC)	EA	1.00

Please confirm the quantities desired.

Response: See revised bid form and summary table for plan sheet 24 provided in this addendum.

6) The pay items for the LED's show the following:

VEH SIG SEC (12IN) LED (GRN ARW)	EA	4.00
VEH SIG SEC (12IN) LED (GRN)	EA	9.00
VEH SIG SEC (12IN) LED (YEL ARW)	EA	8.00
VEH SIG SEC (12IN) LED (YEL)	EA	9.00
VEH SIG SEC (12IN) LED (RED ARW)	EA	8.00
VEH SIG SEC (12IN) LED (RED)	EA	9.00

Plan sheet 130 shows to install the following LED's

VEH SIG SEC (12IN) LED (GRN ARW)	EA	5.00
VEH SIG SEC (12IN) LED (GRN)	EA	9.00
VEH SIG SEC (12IN) LED (YEL ARW)	EA	9.00
VEH SIG SEC (12IN) LED (YEL)	EA	9.00
VEH SIG SEC (12IN) LED (RED ARW)	EA	4.00
VEH SIG SEC (12IN) LED (RED)	EA	9.00

Please confirm the quantities desired.

Response: See revised bid form and summary table for plan sheet 24 provided in this addendum.

7) With 4 pedestrian pole assemblies called for, please confirm the linear feet required for the 24" drill shaft pay item. 22.80?
Response: Confirmed, 22.80 is correct.

---end of questions and responses---

Bid Documents

1. Replace the existing Bid form with the modified version located on the TCI web site, and a copy is enclosed as Attachment No. 1.

Specifications

1. Specification, CPS Underground Electric Infrastructure Facilities, PDF page 473, Section J, Backfilling. Remove and replace sentence 5 with the following:

   "Typical backfilling requires the trench to be backfilled with selected quality material compacted to 95% density in 12-inch, maximum, lifts with a hot-mix hot-lay asphalt type "D" utilized for pavement replacement."

2. Specification, CPS Underground Electric Infrastructure Facilities, PDF page 475, Section 6, Payment. Remove and replace sentence 2 with the following:

   "Unit price bid for all Items shall include all labor, material, and equipment, as described in Section 3 and Section 4 of the *General and Technical Requirements for Installation of Underground Infrastructure Facilities,* required to build and install the underground infrastructure."

3. Specification, CPS Underground Electric Infrastructure Facilities (Special Specification 2773 beginning on PDF page 460), Exhibit A (beginning on PDF page 482)

   1) Modify Exhibit A Drawings 1-15 on PDF pages 483 thru 497 to be consistent with ductline details shown on the Plan Sheet Drawing Page 3 of 3, PDF page 234.

   2) Remove bottom note on Exhibit A Drawings 1-15 indicating "*36" MINIMUM COVER AND FLOWABLE FILL BACKFILL REQUIRE FOR ALL CONDUITS IN PAVE AREA".

Plans

1. Plan Sheet 2, INDEX OF SHEETS, insert below sheet 180 sheets 180A, 180B and 180C ILSN SIGN DETAILS", herewith included as Attachment 2.

2. Plan Sheet 9, GENERAL NOTES, remove the text to the right of G-2 and replace with text below:

   "Steel Wrapped or Asbestos Utility Lines:

   Existing steel wrapped natural gas and/or asbestos cement (AC) water lines that will no longer be in service are usually abandoned in place (AIP). However, if any of these lines have to be removed for whatever reason (in the way of other construction, to make tie-ins, etc.), comply with the applicable San Antonio Water System or CPS Energy specifications"

3. Plan Sheet 24, TRAFFIC, SIGNING, PAVEMENT MARKINGS & DELINEATION SUMMARY, remove and replace the table on the right with the table below.

CITY OF SAN ANTONIO
TRANSPORTATION & CAPITAL IMPROVEMENTS

ITEM	DESCRIPTION	UNIT	QTY
416	DRILL SHAFT (TRF SIG POLE)(30 IN)	LF	11.3
416	DRILL SHAFT (TRF SIG POLE)(36 IN)	LF	39.6
618	CONDUIT (PVC) (SCHD 80) (2")	LF	111
618	CONDUIT (PVC) (SCHD 80) (3")	LF	515
618	CONDUIT (PVC) (SCHD 80) (3") BORE	LF	230
620	ELECTRICAL CONDUCTOR (NO. 6) BARE	LF	65
620	ELECTRICAL CONDUCTOR (NO. 6) INSULATED	LF	140
620	ELECTRICAL CONDUCTOR (NO. 8) BARE	LF	845
624	GROUND BOX TY D (162922) W/APRON	EA	4
636	ALUMINUM SIGNS (TY A)	SF	39
680	INSTALL HWY TRF SIG (ISOLATED)	EA	1
682	BACK PLATE (12IN) (3 SEC)	EA	7
682	BACK PLATE (12IN) (4 SEC)	EA	4
682	BACK PLATE (12IN) (5 SEC)	EA	1
682	PED SIG SEC (12")(2 IND)(HOUSING ONLY)	EA	8
682	PED SIG SEC (12 IN) LED (COUNTDOWN)	EA	8
682	VEH SIG SEC (12IN) LED (GRN ARW)	EA	5
682	VEH SIG SEC (12IN) LED (GRN)	EA	8
682	VEH SIG SEC (12IN) LED (YEL ARW)	EA	9
682	VEH SIG SEC (12IN) LED (YEL)	EA	8
682	VEH SIG SEC (12IN) LED (RED ARW)	EA	4
682	VEH SIG SEC (12IN) LED (RED)	EA	8
684	TRF SIG CBL (TY A)(12 AWG) (9 CONDR)	LF	1645
686	INS TRF SIG PL AM(S) 1 ARM (32') ILSN	EA	1
686	INS TRF SIG PL AM(S) 1 ARM (44') ILSN	EA	2
686	INS TRF SIG PL AM(S) 1 ARM (48') ILSN	EA	1
687	PED POLE ASSEMBLY	EA	4
693	INTERNALLY LIGHTED STREET NAME SIGNS (ILSN SIGN 6' D)	EA	1
693	INTERNALLY LIGHTED STREET NAME SIGNS (ILSN SIGN 8' D)	EA	3
6525	EMERGENCY PREEMTION EMITTER	EA	1
6525	EMERGENCY PREEMTION PHASE SELECTOR	EA	2
6525	EMERGENCY PREEMTION DETECTOR	EA	4
6525	EMERGENCY PREEMTION DETECTOR CABLE (TYPE A) (12AWG) (CONDUCTOR NO.2)	LF	665
8615	RADAR VEHICLE DETECTION SYSTEM (RVDS)	EA	3
8615	RADAR VEHICLE DETECTION SYSTEM (RPDS)	EA	2
8615	RADAR POWER CABLE	LF	1680
8667	BATTERY BACKUP FOR TRAFFIC SIGNAL	EA	1
8606	WIRELESS AP *	EA	1
8606	RADAR BELDEN POWER CABLE *	LF	150
8835	ACCESSIBLE PEDESTRIAN SIGNAL UNITS	EA	8
8536	ETHERNET CABLE CAT 5	LF	1680
	* SUBSIDIARY TO ITEM 680		

4. Plan Sheet 25, LANDSCAPE PLANTING, add note below under "Quantity Summary by Sheets" table on the bottom.

   "**NSPI, subsidiary to other landscape planting pay items."

5. Plan Sheet 67, Demo Plan Sheet Building 1740 & 1760, Sheet 2 of 2, Remove and replace the caption under the lower photograph with: "ALL EQUIPMENT WILL BECOME PROPERTY OF THE CONTRACTOR TO SALVAGE OR DISPOSE OF (NOTE THAT THE GENERATOR SHOWN HAS BEEN REMOVED AND IS NOT PART OF THE SALVAGE/DEMO)

6. Plan Sheet 130, TRAFFIC SIGNAL LAYOUT 36th ST & GENERAL HUDNELL
   1) Remove Text next to identifier A indicating:

      "EXISTING ELECTRICAL SERVICE PEDESTAL"

      and replace with:

      "EXISTING ELECTRICAL SERVICE PEDESTAL, CONTRACTOR SHALL VERIFY ELECTRIC SERVICE PEDESTAL CONDITION, LOCATION, AND CAPACITY AND REPORT TO ENGINEER AT THE BEGINNING OF PROJECT"

   2) Remove a portion of the text next to identifier C indicating:

      "(1) 6' INTERNALLY LUMINATED STREET NAME SIGN (ILSN DOUBLE)"

      and replace this text portion with:

      "(1) 8' INTERNALLY LUMINATED STREET NAME SIGN (ILSN DOUBLE)"

   3) For sign S1A detail, Remove the 6' dimension and replace with 8' dimension.

7. Insert Plan Sheets titled ILSN Sign Details 1 of 3 thru 3 of 3 as plan sheets 180A thru 180C, added as Attachment No. 3.

8. Plan Sheet 203, SAWS Water Sheet 3, revise quantities for the following items:

SPEC	CODE		QTY*	SHEET 9	SHEET 10	SHEET 11
5957	5500	TRENCH EXCAVATION SAFETY PROTECTION	3878	586	743	428
5957	8180	WATER MAIN PIPE (PVC)(8IN)	1353	261*	329	150

9. Plan sheet 210, SAWS Water Sheet 10, near text "128+00", remove the "259 LF OF 8" PVC PIPE RESTRAINED" label and replace with "318 LF OF 8" PVC PIPE RESTRAINED".

10. Plan sheet 211, SAWS Water sheet 11, directly above text "132+00", remove the "146 LF OF 8" PVC PIPE RESTRAINED" label and replace with "150 LF OF 8" PVC PIPE RESTRAINED".

11. Plan Sheet 214, SAWS Sewer Sheet 3, revise quantities for the following items:

	QTY*	SHEET 6
SANITARY SEWER (PVC)(15IN)	343	0

12. Plan sheet 217, SAWS Sewer sheet 6, in the profile remove the "PROP. 358.7 L.F. ~ 8" PVC SDR 26 SANITARY SEWER @ 0.30%" label and replace with "PROP. 375.2 L.F. ~ 8" PVC SDR 26 SANITARY SEWER @ 0.30%".

13. Remove and replace plan sheets 231-234, CPS Electric Sheets 1-4, See Attachment No. 3

ADDENDUM NUMBER 03 ACKNOWLEDGEMENT

CITY OF SAN ANTONIO
TRANSPORTATION & CAPITAL IMPROVEMENTS

RECEIPT OF ADDENDUM NUMBER 03 IS HEREBY ACKNOWLEDGED FOR PLANS AND SPECIFICATIONS FOR CONSTRUCTION OF **36th St. Ph. IIIB (Billy Mitchell-Gen. Hudnell), TCI Project No 40-00287**

FOR WHICH BIDS WILL BE OPENED ON **2:00 P.M. CST, on Tuesday, March 24, 2015.**

THIS ACKNOWLEDGEMENT MUST BE SIGNED AND RETURNED WITH THE BID PACKAGE.

Company Name: _____

Address: _____

City/State/Zip Code: _____

Date: _____

Signature: _____

Print Name/Title: _____

THIS BID PROPOSAL PROVIDES FOR 5 BID OPTIONS, WITH EACH OPTION INCLUSIVE OF THE PRECEDING OPTION(S). BID OPTION 1 IS THE BASE BID (BB), EXCLUSIVE OF SEVERAL LARGE CULVERTS AND RELATED WORK AS INDICATED ON THE PLANS. BID OPTION 2 SUPPLEMENTS THE BASE BID WITH ADDITIVE ALTERNATE 1 (AA1) WHICH INVOLVES ADDING 2 SETS OF LARGE CULVERTS NEXT TO GENERAL HUDNELL. BID OPTION 3 SUPPLEMENTS BID OPTION 2, ADDING THE INTERCEPTOR CULVERTS (AA2) JUST SOUTH OF ENGLAND STREET. BID OPTION 4 FURTHER ADDS AA3, THE EXTENSION OF ENGLAND EAST OF 36TH STREET INCLUSIVE OF CULVERTS UNDER THE ENGLAND EXTENSION AND ASSOCIATED WORK. FINALLY, BID OPTION 5 MODIFIES THE PROJECT WITH AA4 TO PROVIDE COLORED AND PATTERNED CONCRETE FOR RIPRAP, MEDIAN AREAS, AND WINGWALLS.

BID OPTION NO.	ITEM NO.	DESC. CODE	S.P. NO.	BID ITEM DESCRIPTION	UNIT OF MEASURE	APPROX. QUANTITIES	UNIT BID PRICE	AMOUNT	ITEM SEQU NO.
BID OPTION 1 (BASE BID)(BB)									
				COSA					
BASE BID Part A			*(NOTE: Base Bid Part A applies to all bid options)*						
1	0100	2002	002	PREPARING ROW	STA	26		0.00	1
1	0110	2001	110	EXCAVATION (ROADWAY)	CY	23,820		0.00	2
1	0110	2002	110	EXCAVATION (CHANNEL)	CY	57,394		0.00	3
1	0132	2003		EMBANKMENT (FINAL)(ORD COMP)(TY B)	CY	559		0.00	4
1	0161	2002	001	COMPOST MANUF TOPSOIL (BOS)(4")	SY	44,331		0.00	5
1	0164	2023	002	CELL FBR MLCH SEED (PERM)(RURAL) (CLAY)	SY	41,877		0.00	6
1	0164	2027	002	CELL FBR MLCH SEED (PERM)(URBAN) (CLAY)	SY	3,417		0.00	7
1	0164	2029	002	CELL FBR MLCH SEED (TEMP)(WARM)	SY	22,729		0.00	8
1	0164	2031	002	CELL FBR MLCH SEED (TEMP)(COOL)	SY	22,729		0.00	9
1	0168	2001		VEGETATIVE WATERING	MG	1,679		0.00	10
1	0169	2003	002	SOIL RETENTION BLANKETS (CL 1) (TY C)	SY	21,227		0.00	11
1	0192	2002	013	PLANT MATERIAL (1-GAL)	EA	3,287		0.00	12
1	0192	2004	013	PLANT MATERIAL (5-GAL)	EA	525		0.00	13
1	0192	2013	013	MULCH	SY	3,131		0.00	14
1	0192	2024	013	PLANT MATERIAL (30 GAL)(TREE)	EA	50		0.00	15
1	0192	2025	013	PLANT MATERIAL (45 GAL)(TREE)	EA	47		0.00	16
1	0192	2026	013	PLANT MATERIAL (65 GAL)(TREE)	EA	62		0.00	17
1	0192	2033	013	PLANT MATERIAL (15 GAL)(SHRUB)	EA	21		0.00	18
1	0193	2001		PLANT MAINTENANCE	MO	18		0.00	19
1	0351	2008		FLEXIBLE PAVEMENT STRUCTURE REPAIR(12")	SY	294		0.00	20
1	0354	2024		PLANE ASPH CONC PAV(2" TO 4")	SY	187		0.00	21
1	0360	2004	003	CONC PVMT (CONT REINF-CRCP)(11")	SY	16,715		0.00	22
1	0400	2001		STRUCT EXCAV	CY	2,079		0.00	23
1	0400	2003		STRUCT EXCAV (PIPE)	CY	331		0.00	24
1	0401	2001		FLOWABLE BACKFILL	CY	212		0.00	25
1	0402	2001		TRENCH EXCAVATION PROTECTION	LF	1,933		0.00	26
1	0416	2029	001	DRILL SHAFT (RDWY ILL POLE) (30 IN)	LF	290		0.00	27
1	0416	2031	001	DRILL SHAFT (TRF SIG POLE)(30 IN)	LF	11		0.00	28
1	0416	2032	001	DRILL SHAFT (TRF SIG POLE)(36 IN)	LF	40		0.00	29
1	0420	2001	002	CL A CONC (MISC)	CY	296		0.00	30
1	0464	2005	006	RC PIPE (CL III)(24 IN)	LF	883		0.00	31
1	0464	2007	006	RC PIPE (CL III)(30 IN)	LF	828		0.00	32
1	0464	2009	006	RC PIPE (CL III)(36 IN)	LF	222		0.00	33
1	0465	2077	001,002	INLET (COMPL)(DROP)(TY 1)	EA	2		0.00	34
1	0465	2089	001,002	MANH (COMPL)(JUNCT BOX)(TY 1)	EA	2		0.00	35
1	0465	2143	001,002	INLET (COMPL)(TRAFFIC)(TY X-1)	EA	2		0.00	36
1	0465	2289	001,002	MANH (COMPL)(TY 3)(SPECIAL)	EA	1		0.00	37
1	0465	2388	001,002	INLET (COMPL)(DROP)(TY IA)(SPECIAL)	EA	1		0.00	38
1	0465	2566	001,002	INLET (COMPL)(CURB)(TY I)	EA	10		0.00	39
1	0479	2001		ADJ MANHS	EA	1		0.00	40
1	500	2001	011	MOBILIZATION	LS	1		0.00	41
1	502	2001	033	BARRICADES, SIGNS AND TRAFFIC HANDLING	MO	16		0.00	42
1	0529	2023		CONC CURB (MONO)	LF	4,993		0.00	43
1	0529	2026		CONC CURB (ARMOR CURB SLOT)	LF	308		0.00	44
1	0529	2036		CONC CURB (TY A)	LF	7,731		0.00	45
1	0529	2042		CONC CURB (TYPE I-B)	LF	2,446		0.00	46
1	0530	2011	006	DRIVEWAYS (ACP)	SY	485		0.00	47
1	0530	2010	006	DRIVEWAYS (CONC)	SY	77		0.00	48
1	0531	2007		CURB RAMPS (TY 3)	EA	6		0.00	49
1	0531	2010		CURB RAMPS (TY 7)	EA	12		0.00	50
1	0531	2013		CURB RAMPS (TY 20)	EA	2		0.00	51
1	0531	2015		CONC SIDEWALKS (4")	SY	2,402		0.00	52

BID OPTION NO.	ITEM NO.	DESC. CODE	S.P. NO.	BID ITEM DESCRIPTION	UNIT OF MEASURE	APPROX. QUANTITIES	UNIT BID PRICE	AMOUNT	ITEM SEQU NO.
1	0531	2017		CURB RAMPS (TY 21)	EA	1		0.00	53
1	0618	2020		CONDT (PVC) (SCHD 40) (2 1/2")	LF	4,220		0.00	54
1	0618	2034		CONDT (PVC) (SCHD 80) (2")	LF	111		0.00	55
1	0618	2036		CONDT (PVC) (SCHD 80) (2 1/2")	LF	867		0.00	56
1	0618	2038		CONDT (PVC) (SCHD 80) (3")	LF	515		0.00	57
1	0618	2039		CONDT (PVC) (SCHD 80) (3") (BORE)	LF	230		0.00	58
1	0618	2042		CONDT (PVC) (SCHD 80) (6")	LF	594		0.00	59
1	0620	2009		ELEC CONDR (NO. 6) BARE	LF	65		0.00	60
1	0620	2010		ELEC CONDR (NO. 6) INSULATED	LF	140		0.00	61
1	0620	2011		ELEC CONDR (NO. 8) BARE	LF	845		0.00	62
1	0624	2008	014	GROUND BOX TY A (122311) W/APRON	EA	2		0.00	63
1	0624	2014	014	GROUND BOX TY D (162922) W / APRON	EA	4		0.00	64
1	0636	2001	014	ALUMINUM SIGNS (TY A)	SF	39		0.00	65
1	0636	2001	014	ALUMINUM SIGNS (TY A)	SF	25		0.00	66
1	0644	2076		IN SM RD SN SP & AM(GALV SQ)(CITY OF SAT)	EA	23		0.00	67
1	0666	2003		REFL PAV MRK TY I (W) 4" (BRK)(100MIL)	LF	1,480		0.00	68
1	0666	2012		REFL PAV MRK TY I (W) 4" (SLD)(100MIL)	LF	4,281		0.00	69
1	0666	2018		REFL PAV MRK TY I (W) 6" (DOT)(100MIL)	LF	28		0.00	70
1	0666	2030		REFL PAV MRK TY I (W) 8" (DOT)(100MIL)	LF	320		0.00	71
1	0666	2036		REFL PAV MRK TY I (W) 8" (SLD)(100MIL)	LF	1,906		0.00	72
1	0666	2042		REFL PAV MRK TY I (W) 12"(SLD)(100MIL)	LF	63		0.00	73
1	0666	2048		REFL PAV MRK TY I (W) 24"(SLD)(100MIL)	LF	2,090		0.00	74
1	0666	2054		REFL PAV MRK TY I (W) (ARROW) (100MIL)	EA	14		0.00	75
1	0666	2057		REFL PAV MRK TY I (W)(BIKE ARW)(100MIL)	EA	16		0.00	76
1	0666	2063		REFL PAV MRK TY I(W)(BIKE SYML)(100MIL)	EA	8		0.00	77
1	0666	2081		REFL PAV MRK TY I(W)(MED NOSE)(100MIL)	EA	1		0.00	78
1	0666	2096		REFL PAV MRK TY I (W) (WORD) (100MIL)	EA	6		0.00	79
1	0666	2111		REFL PAV MRK TY I (Y) 4" (SLD)(100MIL)	LF	8,006		0.00	80
1	0666	2132		REFL PAV MRK TY I (Y) 24"(SLD)(100MIL)	LF	116		0.00	81
1	0666	2141		REFL PAV MRK TY I (Y)(MED NOSE)(100MIL)	EA	1		0.00	82
1	0666	2189		PAVEMENT SEALER 4"	LF	13,998		0.00	83
1	0666	2190		PAVEMENT SEALER 6"	LF	28		0.00	84
1	0666	2191		PAVEMENT SEALER 8"	LF	3,253		0.00	85
1	0666	2193		PAVEMENT SEALER 12"	LF	63		0.00	86
1	0666	2195		PAVEMENT SEALER 24"	LF	2,313		0.00	87
1	0666	2219		PAVEMENT SEALER (ARROW)	EA	14		0.00	88
1	0666	2220		PAVEMENT SEALER (WORD)	EA	9		0.00	89
1	0666	2221		PAVEMENT SEALER (MED NOSE)	EA	2		0.00	90
1	0666	2251		PAVEMENT SEALER (BIKE ARROW)	EA	16		0.00	91
1	0666	2252		PAVEMENT SEALER (BIKE SYMBOL)	EA	8		0.00	92
1	0672	2012	034	REFL PAV MRKR TY I-C	EA	262		0.00	93
1	0672	2015	034	REFL PAV MRKR TY II-A-A	EA	230		0.00	94
1	0680	2002		INSTALL HWY TRF SIG (ISOLATED)	EA	1		0.00	95
1	0682	2001	003	BACK PLATE (12IN) (3 SEC)	EA	7		0.00	96
1	0682	2002	003	BACK PLATE (12IN) (4 SEC)	EA	4		0.00	97
1	0682	2003	003	BACK PLATE (12IN) (5 SEC)	EA	1		0.00	98
1	0682	2022	003	VEH SIG SEC (12IN) LED (GRN ARW)	EA	5		0.00	99
1	0682	2023	003	VEH SIG SEC (12IN) LED (GRN)	EA	8		0.00	100
1	0682	2024	003	VEH SIG SEC (12IN) LED (YEL ARW)	EA	9		0.00	101
1	0682	2025	003	VEH SIG SEC (12IN) LED (YEL)	EA	8		0.00	102
1	0682	2026	003	VEH SIG SEC (12IN) LED (RED ARW)	EA	4		0.00	103
1	0682	2027	003	VEH SIG SEC (12IN) LED (RED)	EA	8		0.00	104
1	0682	2043	003	PED SIG SEC (12")(2 IND)(HOUSING ONLY)	EA	8		0.00	105
1	0682	2066	003	PED SIG SEC (12 IN) LED (COUNTDOWN)	EA	8		0.00	106
1	0684	2014		TRF SIG CBL (TY A)(12 AWG) (9 CONDR)	LF	1,645		0.00	107
1	0686	2032		INS TRF SIG PL AM(S) 1 ARM (32') ILSN	EA	1		0.00	108
1	0686	2044		INS TRF SIG PL AM(S) 1 ARM (44') ILSN	EA	2		0.00	109
1	0686	2048		INS TRF SIG PL AM(S) 1 ARM (48') ILSN	EA	1		0.00	110
1	0687	2001	005	PED POLE ASSEMBLY	EA	4		0.00	111
1	0690	2207		REMOVE LUMINAIRE POLE	EA	22		0.00	112
1	0693	0001		INTERNALLY LIGHTED STREET NAME SIGNS (ILSN SIGN 6' D)	EA	1		0.00	113

BID OPTION NO.	ITEM NO.	DESC. CODE	S.P. NO.	BID ITEM DESCRIPTION	UNIT OF MEASURE	APPROX. QUANTITIES	UNIT BID PRICE	AMOUNT	ITEM SEQU NO.
1	0693	0002		INTERNALLY LIGHTED STREET NAME SIGNS (ILSN SIGN 8' D)	EA	3		0.00	114
1	0772	2003		POST AND CABLE FENCE(NEW INSTALLATION)	LF	40		0.00	115
1	0801.1	0001		LEVEL I PROTECTION FENCING (COSA)	LF	3,195		0.00	116
1	0801.2	0002		LEVEL IIA PROTECTION FENCING (COSA)	LF	5,013		0.00	117
1	0801.3	0003		LEVEL IIB PROTECTION FENCING (COSA)	LF	9		0.00	118
1	1122	2002		ROCK FILTER DAMS (INSTALL) (TY 2)	LF	25		0.00	119
1	1122	2003		ROCK FILTER DAMS (INSTALL) (TY 3)	LF	81		0.00	120
1	1122	2009		ROCK FILTER DAMS (REMOVE)	LF	106		0.00	121
1	1122	2016		CONSTRUCTION EXITS (INSTALL) (TY 1)	SY	156		0.00	122
1	1122	2019		CONSTRUCTION EXITS (REMOVE)	SY	156		0.00	123
1	1122	2037		TEMPORARY SEDIMENT CONTROL FENCE INSTLL	LF	1,732		0.00	124
1	1122	2047		BIOGRD EROSN CONT LOGS (8" DIA) INSTALL	LF	1,186		0.00	125
1	1122	2056		BIODEGRADBLE EROSION CONTROL LOGS REMOV	LF	1,186		0.00	126
1	1122	2057		TEMPORARY SEDIMENT CONTROL FENCE REMOVE	LF	1,732		0.00	127
1	3267	2011		D-GR HMA(SQ) TY-B PG64-22	TON	4,523		0.00	128
1	3267	2048		D-GR HMA(SQ) TY-C SAC-B PG70-22	TON	145		0.00	129
1	6525	2001		EMERGENCY PREEMTION PHASE SELECTOR	EA	2		0.00	130
1	6525	2002		EMERGENCY PREEMTION DETECTOR	EA	4		0.00	131
1	6525	2003		EMERGENCY PREEMTION DETECTOR CABLE (TYPE A) (12AWG) (CONDUCTOR NO.2)	LF	665		0.00	132
1	6525	2004		EMERGENCY PREEMTION EMITTER	EA	1		0.00	133
1	8536	2001		ETHERNET CABLE CAT 5	LF	1,680		0.00	134
1	8615	2001		RADAR ADVANCE DETECTION DEVICE	EA	3		0.00	135
1	8615	2002		RADAR ADVANCE DETECTION DEVICE (OPT1)	EA	2		0.00	136
1	8615	9999		RADAR POWER CABLE	LF	1,680		0.00	137
1	8667	2001		BBU SYSTEM (EXTERNAL BATT CABINET)	EA	1		0.00	138
1	8835	2001		ACCESSIBLE PEDESTRIAN SIGNAL UNITS	EA	8		0.00	139
1	9001	2001		FIXED BOLLARDS	EA	6		0.00	140
1	9506	9999		BLDING DEMO	LS	1		0.00	141
							BASE BID PART A TOTAL	0.00	
BASE BID Part B				(Note: Base Bid Part B items are segregated to facilitate bid options)					
1	0110	2002	110	EXCAVATION (CHANNEL)	CY	1,840		0.00	142
1	0132	2003		EMBANKMENT (FINAL)(ORD COMP)(TY B)	CY	32		0.00	143
1	0400	2001		STRUCT EXCAV	CY	25		0.00	144
1	0402	2001		TRENCH EXCAVATION PROTECTION	LF	13		0.00	145
1	0432	2002		RIPRAP (CONC)(5 IN)	CY	747		0.00	146
1	0464	2005		RC PIPE (CL III)(24 IN)	LF	13		0.00	147
1	0536	2002		CONC MEDIAN	SY	788		0.00	148
1	0666	2132		REFL PAV MRK TY I (Y) 24"(SLD)(100MIL)	LF	138		0.00	149
1	0672	2015	034	REFL PAV MRKR TY II-A-A	EA	18		0.00	150
				The base bid involves the primary roadway, drainage, utility, and landscaping elements of the proposed project.			**BASE BID PART B TOTAL**	0.00	
							BASE BID PART A TOTAL	0.00	
BASE BID ROADWAY TOTAL. Part A + Part B							**BASE BID ROADWAY TOTAL**	0.00	

BID OPTION NO.	ITEM NO.	DESC. CODE	S.P. NO.	BID ITEM DESCRIPTION	UNIT OF MEASURE	APPROX. QUANTITIES	UNIT BID PRICE	AMOUNT	ITEM SEQU NO.
UTILITY SECTION									
				SAWS Water					
1	0164	2027	002	CELL FBR MLCH SEED (PERM) (URBAN) (CLAY)	SY	337		0.00	151
1	0351	2008		FLEXIBLE PAVEMENT STRUCTURE REPAIR (12")	SY	1,112		0.00	152
1	0531	2015		CONC SIDEWALKS (4")	SY	8		0.00	153
1	3000	1000		REMOVAL, TRANSPORTATION, AND DISPOSAL OF ASBESTOS CEMENT PIPE	LF	100		0.00	154
1	5957	1000	005	MOBILIZATION	LS	1		0.00	155
1	5957	1010	002	PREPARING RIGHT-OF-WAY	LS	1		0.00	156
1	5957	5500		TRENCH EXCAVATION SAFETY PROTECTION	LF	3,878		0.00	157
1	5957	8181		12" PVC WATERLINE	LF	40		0.00	158
1	5957	8180		8" PVC WATERLINE	LF	1,353		0.00	159
1	5957	8182		16" PVC WATERLINE	LF	2,485		0.00	160
1	5957	8240		RELAY 1" SHORT SERVICE	EA	1		0.00	161
1	5957	8241		RELAY 1" LONG SERVICE	EA	1		0.00	162
1	5957	8242		RELAY 4" SHORT SERVICE	EA	1		0.00	163
1	5957	8243		NEW 3/4" SHORT SERVICE	EA	1		0.00	164
1	5957	8281		8" GATE VALVES	EA	11		0.00	165
1	5957	8282		12" GATE VALVES	EA	3		0.00	166
1	5957	8283		16" GATE VALVES	EA	3		0.00	167
1	5957	8310		8"x8" CUT-IN TEE	EA	1		0.00	168
1	5957	8340		FIRE HYDRANTS	EA	6		0.00	169
1	5957	8360		PIPE FITTINGS, ALL SIZES AND TYPES	TON	4.3		0.00	170
1	5957	8400		6" WATER TIE-INS	EA	1		0.00	171
1	5957	8401		8" WATER TIE-INS	EA	10		0.00	172
1	5957	8402		12" WATER TIE-INS	EA	2		0.00	173
1	5957	8403		16" WATER TIE-INS	EA	6		0.00	174
1	5957	8410		HYDROSTATIC TESTING	EA	6		0.00	175
1	5957	8440		2" BLOWOFF, TEMPORARY	EA	7		0.00	176
1	5957	8460		1" AIR RELEASE VALVES	EA	3		0.00	177
1	5957	8562		WATER MAIN PIPE (CASING)(STEEL)(24 IN)(OPEN CUT)	LF	49		0.00	178
1	5957	8561		WATER MAIN PIPE (CARRIER)(PVC)(8 IN)(OPEN CUT)	LF	49		0.00	179
1	5957	8580		CONCRETE ENCASEMENT	CY	363		0.00	180
1	5957	2027		CUT & RPLC CONC CURB	LF	98		0.00	181
							SAWS WATER TOTAL	0.00	
				SAWS Sanitary Sewer					
1	0351	2008		FLEXIBLE PAVEMENT STRUCTURE REPAIR (12")	SY	794		0.00	182
1	5957	1000	005	MOBILIZATION	LS	1		0.00	183
1	5957	1010	002	PREPARING RIGHT-OF-WAY	LS	1		0.00	184
1	5957	5500		TRENCH EXCAVATION SAFETY PROTECTION	LF	719		0.00	185
1	5957	8480		SANITARY SEWER (PVC)(8IN)(6'-10')	LF	376		0.00	186
1	5957	8481		SANITARY SEWER (PVC)(15IN)(6'-10')	LF	343		0.00	187
1	5957	8520		SANITARY SEWER MANHOLE (0' - 6')	EA	4		0.00	188
1	5957	8521		EXTRA DEPTH MH	VF	8		0.00	189
1	5957	8541		ONE-WAY SANITARY SEWER CLEAN-OUT	EA	1		0.00	190
1	5957	8540		SANITARY SEWER LATERALS	LF	20		0.00	191
1	5957	8580		CONCRETE ENCASEMENT	CY	4		0.00	192
1	5957	8640		BYPASS PUMPING	LS	1		0.00	193
1	5957	2029		CUT AND RESTORE CONCRETE CURB	LF	15		0.00	194
1	5957	8660		SEWER MAIN TELEVISION INSPECTION 8"-15"(PRE-CONSTRUCTION)	LF	719		0.00	195
1	5957	8661		SEWER MAIN TELEVISION INSPECTION 8"-15"(POST-CONSTRUCTION)	LF	719		0.00	196
							SAWS SEWER TOTAL	0.00	

BID OPTION NO.	ITEM NO.	DESC. CODE	S.P. NO.	BID ITEM DESCRIPTION	UNIT OF MEASURE	APPROX. QUANTITIES	UNIT BID PRICE	AMOUNT	ITEM SEQU NO.
				CPS Energy Gas					
1	0351	2008		FLEXIBLE PAVEMENT STRUCTURE REPAIR(12") (10" ASPHALT TREATED BASE WITH 2" H.M.A.C. TYPE D OR 10" FLOWABLE FILL WITH 2" H.M.A.C. TYPE D	SY	342		0.00	197
1	0401	2001		FLOWABLE FILL	CY	10		0.00	198
1	0402	2001		TRENCH EXCAVATION PROTECTION: THE EXCAVATED TRENCH SHALL BE PROTECTED IN ACCORDANCE WITH ITEM 402.	LF	3,711		0.00	199
1	5950	2001		RERUN AND LOWER GAS SERVICE OFF NEW MAIN TO METER, SIZES 1/2" THRU 4" (INCLUDING REPLACING RISER IF NECESSARY)	EA	2		0.00	200
1	5950	2002		INSTALL GAS OR CASING (DISTANCE AS MEASURED ALONG THE TOP OF TRENCH) 2" PLASTIC PIPE AND TRACER WIRE	LF	638		0.00	201
1	5950	2003		INSTALL GAS OR CASING (DISTANCE AS MEASURED ALONG THE TOP OF TRENCH) 6" PLASTIC PIPE AND TRACER WIRE	LF	3,073		0.00	202
1	5950	2004		REMOVE AND REPLACE CONCRETE CURB	LF	159		0.00	203
1	5950	2014	005	NGP MOBILIZATION	LS	1		0.00	204
							CPS GAS TOTAL	0.00	
				CPS Energy Electric Conduit					
1	0351	2008		FLEXIBLE PAVEMENT STRUCTURE REPAIR(12") (10" ASPHALT TREATED BASE WITH 2" H.M.A.C. TYPE D OR 10" FLOWABLE FILL WITH 2" H.M.A.C. TYPE D	SY	190		0.00	205
1	2773	8000		UG ELECTRIC MOBILIZATION	LS	1		0.00	206
1	2773	8001		CPSE TRENCH EXCAVATION PROTECTION (MANHOLE AND TRENCH)	FT & EA	2,694		0.00	207
1	2773	8002		DUCTBANK - 3-4" & 1-2" & 1 NEUTRAL	FT	60		0.00	208
1	2773	8003		DUCTBANK - 4-4" & 1-2" &4 NEUTRALS	FT	20		0.00	209
1	2773	8004		DUCTBANK - 6-4" & 2-2" & 3 NEUTRALS	FT	15		0.00	210
1	2773	8005		DUCTBANK - 8-4" & 3-2" & 4 NEUTRALS	FT	5		0.00	211
1	2773	8006		DUCTBANK - 3-4" & 1-2" & 2 NEUTRALS	FT	5		0.00	212
1	2773	8007		DUCTBANK - 9-4" & 1-2" & 3 NEUTRALS	FT	15		0.00	213
1	2773	8008		DUCTBANK - 4-4" & 4 NEUTRALS	FT	200		0.00	214
1	2773	8009		DUCTBANK - 21-4" & 3-2" & 7 NEUTRALS	FT	39		0.00	215
1	2773	8010		DUCTBANK - 12-4" & 1-2" & 3 NEUTRALS	FT	45		0.00	216
1	2773	8011		DUCTBANK - 9-4" & 3-2" & 4 NEUTRALS	FT	1,034		0.00	217
1	2773	8012		DUCTBANK - 9-4" & 2-2" & 4 NEUTRALS	FT	1,110		0.00	218
1	2773	8013		DUCTBANK - 2-3"	FT	20		0.00	219
1	2773	8014		1-4" PVC CONDUIT	FT	20		0.00	220
1	2773	8015		DUCTBANK- 18-4" & 3-2" & 7 NEUTRALS	FT	13		0.00	221
1	2773	8016		DUCTBANK - 8-4" & 1-2" & 8 NEUTRALS	FT	123		0.00	222
1	2773	8017		1-2 1/2" PVC CONDUIT	FT	10		0.00	223
1	2773	8018		MANHOLE - 8'X8'X10'	EA	3		0.00	224
1	2773	8019		MANHOLE - 8'X8'X8'	EA	5		0.00	225
1	2773	8020		SWITCHGEAR SLAB - 7'X12'	EA	3		0.00	226
1	2773	8021		SWITCHGEAR SLAB - 7'X10'	EA	1		0.00	227
1	2773	8022		TRANSFORMER SLAB - 44" X 56"	EA	1		0.00	228
							CPS ELECTRIC CONDUIT TOTAL	0.00	
							SAWS WATER TOTAL	0.00	
							SAWS SEWER TOTAL	0.00	
							CPS GAS TOTAL	0.00	
							CPS ELECTRIC CONDUIT TOTAL	0.00	
UTILITY TOTAL				Note: Utility work is not substantially impacted by bid options			**UTILITY TOTAL**	0.00	
				Bid Option 1 is the Base Bid and provides the basic roadway, drainage, utilities, and landscaping required for the project			**BASE BID ROADWAY TOTAL**	0.00	
							UTILITY TOTAL	0.00	
BID OPTION 1 TOTAL							**BASE BID PROJECT TOTAL**	0.00	

BID OPTION NO.	ITEM NO.	DESC. CODE	S.P. NO.	BID ITEM DESCRIPTION	UNIT OF MEASURE	APPROX. QUANTITIES	UNIT BID PRICE	AMOUNT	ITEM SEQU NO.

ADDITIVE ALTERNATE BIDS AND REVISED PROJECT TOTALS

Note: Additive bids will be selected in order, and each bid option will be inclusive of previous options.

BID OPTION 2

ADDITIVE ALTERNATE 1 (AA1)

COSA

2	0400	2002		STRUCT EXCAV (BOX)	CY	12,357		0.00	229
2	0403	2001		TEMPORARY SPL SHORING	SF	9,526		0.00	230
2	0420	2019	002	CL C CONC (CAP)	CY	39		0.00	231
2	0462	2056	015	CONC BOX CULV (12 FT X 5 FT)	LF	720		0.00	232
2	0462	9001	015	CONC BOX CULV (11 FT X 5 FT)	LF	360		0.00	233
2	0476	9001		JACK OR TUN BOX CULV (11 FT X 5 FT)	LF	120		0.00	234
2	0476	9002		JACK OR TUN BOX CULV (12 FT X 5 FT)	LF	240		0.00	235

Bid Option 2 modifies the Base Bid (Bid Option 1) with AA1, the addition of 2 sets of large culverts close to General Hudnell.

ADDITIVE ALTERNATE 1 SUBTOTAL 0.00
BASE BID PROJECT TOTAL 0.00
BID OPTION 2 TOTAL **ADDITIVE ALTERNATE 1 PROJECT TOTAL** 0.00

BID OPTION 3

ADDITIVE ALTERNATE 2 (AA2) **COSA**

AA2 Part A Note: AA2 Part A adds new bid items and incrementally adds to base bid items.

3	0400	2002		STRUCT EXCAV (BOX)	CY	1,713		0.00	236
3	0403	2001		TEMPORARY SPL SHORING	SF	4,129		0.00	237
3	0462	2029	015	CONC BOX CULV (10 FT X 5 FT)	LF	260		0.00	238

ADDITIVE ALTERNATE 2 PART A TOTAL 0.00

AA2 Part B

3	0420	2019	002	CL C CONC (CAP)	CY	6		0.00	239

ADDITIVE ALTERNATE 2 PART B TOTAL 0.00
ADDITIVE ALTERNATE 2 PART A TOTAL 0.00
ADDITIVE ALTERNATE 1 PROJECT TOTAL 0.00

Bid Option 3 modifies Bid Option 2 with AA2, the addition of interceptor culverts located just south of England Street.

BID OPTION 3 TOTAL **ADDITIVE ALTERNATE 2 PROJECT TOTAL** 0.00

BID OPTION NO.	ITEM NO.	DESC. CODE	S.P. NO.	BID ITEM DESCRIPTION	UNIT OF MEASURE	APPROX. QUANTITIES	UNIT BID PRICE	AMOUNT	ITEM SEQU NO.
BID OPTION 4									
ADDITIVE ALTERNATE 3 (AA3)				**COSA**					
AA3 Part A				Note: AA3 Part A adds new bid items and incrementally adds to base bid items.					
4	0110	2001	110	EXCAVATION (ROADWAY)	CY	147		0.00	240
4	0192	2024	013	PLANT MATERIAL (30 GAL)(TREE)	EA	12		0.00	241
4	0400	2002		STRUCT EXCAV (BOX)	CY	1,923		0.00	242
4	0403	2001		TEMPORARY SPL SHORING	SF	2,289		0.00	243
4	0420	2019	002	CL C CONC (CAP)	CY	3		0.00	244
4	0450	2076	001	RAIL (HANDRAIL)(TY E)	LF	319		0.00	245
4	0462	2034	015	CONC BOX CULV (10 FT X 10 FT)	LF	320		0.00	246
4	0465	2566		INLET (COMPL)(CURB)(TY I)	EA	2		0.00	247
4	0529	2036		CONC CURB (TY A)	LF	247		0.00	248
4	0531	2010		CURB RAMPS (TY 7)	EA	2		0.00	249
4	0531	2015		CONC SIDEWALKS (4")	SY	136		0.00	250
4	0618	2042		CONDT (PVC) (SCHD 80) (6")	LF	385		0.00	251
4	0636	2001	014	ALUMINUM SIGNS (TY A)	SF	6		0.00	252
4	0644	2076		IN SM RD SN SP&AM(GALV SQ)(CITY OF SAT)	EA	1		0.00	253
4	0666	2036		REFL PAV MRK TY I (W) 8" (SLD)(100MIL)	LF	139		0.00	254
4	0666	2048		REFL PAV MRK TY I (W) 24"(SLD)(100MIL)	LF	17		0.00	255
4	0666	2054		REFL PAV MRK TY I (W) (ARROW) (100MIL)	EA	2		0.00	256
4	0666	2096		REFL PAV MRK TY I (W) (WORD) (100MIL)	EA	1		0.00	257
4	0666	2111		REFL PAV MRK TY I (Y) 4" (SLD)(100MIL)	LF	51		0.00	258
4	0672	2012	034	REFL PAV MRKR TY I-C	EA	40		0.00	259
4	3267	2011		D-GR HMA(SQ) TY-B PG64-22	TON	230		0.00	260
4	3267	2048		D-GR HMA(SQ) TY-C SAC-B PG70-22	TON	50		0.00	261
							ADDITIVE ALTERNATE 3 PART A TOTAL	0.00	
AA3 Part B				**COSA**					
4	0432	2002		RIPRAP (CONC)(5 IN)	CY	991		0.00	262
4	0466	2055		WINGWALL (PW)(HW=11 FT)	EA	1		0.00	263
4	0466	2056		WINGWALL (PW)(HW=12 FT)	EA	2		0.00	264
4	0536	2002		CONC MEDIAN	SY	788		0.00	265
							ADDITIVE ALTERNATE 3 PART B TOTAL	0.00	
							ADDITIVE ALTERNATE 3 PART A TOTAL	0.00	
				Bid Option 4 modifies Bid Option 3 with AA3, the extension of England Street to the east with associated culverts and related infrastructure changes.			**BASE BID PART A TOTAL**	0.00	
							UTILITY TOTAL	0.00	
							ADDITIVE ALTERNATE 1 SUBTOTAL	0.00	
							ADDITIVE ALTERNATE 2 PART A TOTAL	0.00	
BID OPTION 4 TOTAL							**ADDITIVE ALTERNATE 3 PROJECT TOTAL**	0.00	

BID OPTION NO.	ITEM NO.	DESC. CODE	S.P. NO.	BID ITEM DESCRIPTION	UNIT OF MEASURE	APPROX. QUANTITIES	UNIT BID PRICE	AMOUNT	ITEM SEQU NO.
BID OPTION 5									
ADDITIVE ALTERNATE 4 (AA4)				**COSA**					
				Note AA4 essentially replaces AA3 Part B					
5	0432	2002		RIPRAP CONC (5 IN) SPL	CY	991		0.00	266
5	0466	2055		WINGWALL (PW)(HW=11FT) SPL	EA	1		0.00	267
5	0466	2056		WING WALL (PW)(HW=12FT) SPL	EA	2		0.00	268
5	0536	9999		CONC MEDIAN (SPL)	SY	788		0.00	269
				Note SPL is a designation for colored and textured concrete.					
							ADDITIVE ALTERNATE 4 SUBTOTAL	0.00	
							ADDITIVE ALTERNATE 3 PART A TOTAL	0.00	
				Bid Option 5 modifies Bid Option 4 with AA4, substitution of certain concrete pay			**BASE BID PART A TOTAL**	0.00	
				items with colored and textured concrete on the same items.			**UTILITY TOTAL**	0.00	
							ADDITIVE ALTERNATE 1 SUBTOTAL	0.00	
							ADDITIVE ALTERNATE 2 PART A TOTAL	0.00	
BID OPTION 5 TOTAL								0.00	

_____certifies that the unit prices shown on this complete computer print-out for all of the bid items and the options and alternates contained in this proposal are the unit prices intended and that its bid will be tabulated using these unit prices and no other information from this print-out.

_____acknowleges and agrees that the total bid amount shown will be read as its total bid and further agrees that the official total bid amount will be determined by multiplying the unit bid prices shown in this print-out by the respective estimated quantities shown in the proposal and then totaling all of the extended amounts. _____ agrees to the terms, conditions, and requirements of the bidder's bid proposal.

Signed: _____ Date: _____

Title: _____

			CONTRACTOR FORCE ACCOUNT ITEMS				
			FURNISH POLICE OFFICER AND CRUISER	LS	1	$ 2,500.00	$ 2,500.00
			SAFETY CONTINGENCY	LS	1	$ 4,000.00	$ 4,000.00
			EROSION CONTROL MAINTENANCE	LS	1	$ 5,000.00	$ 5,000.00
			SUBTOTAL FORCE ACCOUNT ITEMS				**$ 11,500.00**

BID OPTION NO.	ITEM NO.	DESC. CODE	S.P. NO.	BID ITEM DESCRIPTION	UNIT OF MEASURE	APPROX. QUANTITIES	UNIT BID PRICE	AMOUNT	ITEM SEQU NO.

THE FOLLOWING TABLES ARE FOR INFORMATION PURPOSES AND WILL, IF FORMULAS IN EXCEL ARE UNALTERED, FACILITATE TABULATION AND COMPARISION OF THE MULTIPLE BID OPTIONS. THESE TABLES ARE NOT PART OF THE BID DOCUMENTS AND NOT PART OF THE BID DOCUMENTS

SUMMARY BY BID OPTION

	TOTAL PER OPTION	Less Util	NON UTIL Added Amt	
1	0	0		BASE BID
2	0	0	0	AA1
3	0	0	0	AA2
4	0	0	0	AA3
5	0	0	0	AA4

(EXCLUSIVE OF FORCE ACCOUNT ITEMS)

Bid Option Matrix

	OPITON 1	OPITON 2	OPITON 3	OPITON 4	OPTION 5
	Base Bid	AA1	AA2	AA3	AA4
BB Part A	0	0	0	0	0
BB Part	0	0	0		
SAWS Wt	0	0	0	0	0
SAWS Sw	0	0	0	0	0
CPS Ga	0	0	0	0	0
CPS Elect	0	0	0	0	0
AA1		0	0	0	0
AA2Part A			0	0	0
AA2Part B			0		
AA3 Part A				0	0
AA3 Part B				0	
AA4					0
Bid Option Total	0	0	0	0	0
UTIL TOTAL	0	0	0	0	0
TCI Total	0	0	0	0	0

round off 4

INTERNALLY LIGHTED STREET NAME SIGN WITH LIGHT EMITTING DIODE LAMPS

SINGLE + DOUBLE SIDED ILSN SIGN NOTES:

1. Eight foot ILSN sign shall not exceed 16 sq. ft. effective projected area (EPA) and shall not exceed a weight of 85 lbs.
   Six foot ILSN sign shall not exceed 12 sq. ft. EPA and shall not exceed a weight of 70 lbs.
2. Sign message shall be as shown elsewhere in the plans.
3. See Special Specification, "Internally Lighted Street Name Signs" for additional details.
4. Actual sign housing may change with vendor.
5. LED Light Source locations may vary by manufacturer. Power requirements and light output levels of specificaiton shall be satisfied.

EXPLANATION OF DESCRIPTION

ILSN Sign 8 D

- Internally lighted street name sign
- Sign length; 6 or 8 ft.
- Single or double face

DOUBLE SIDED ILSN SIGN

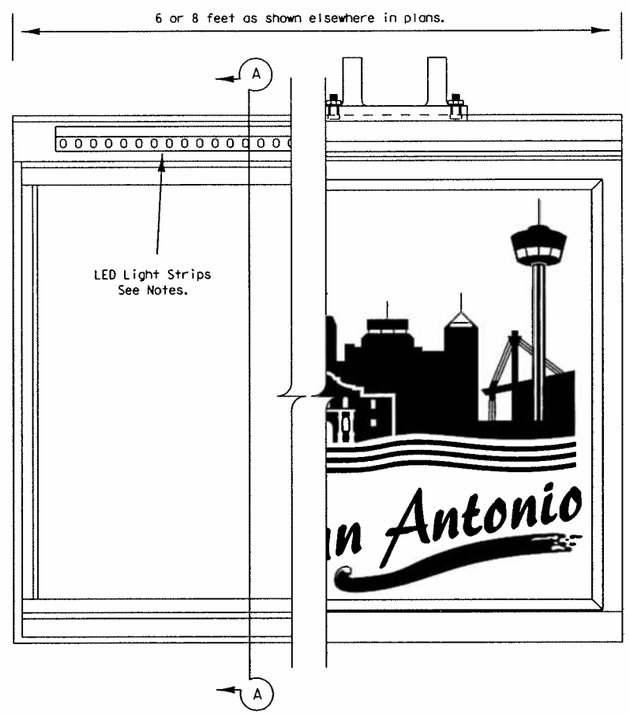

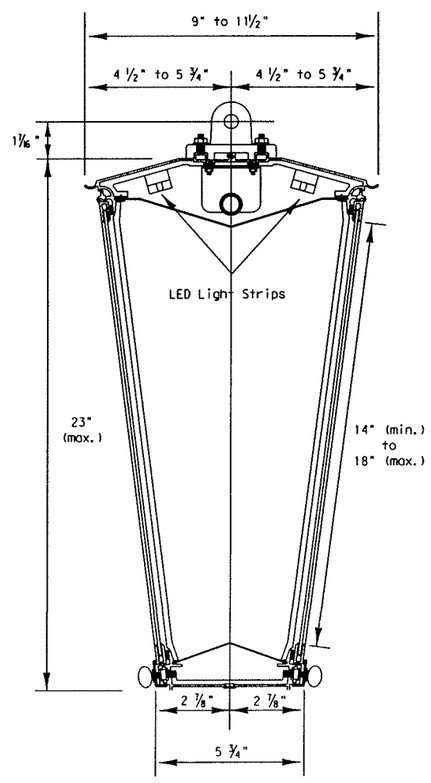

Section A-A

DOUBLE SIDED ILSN SIGN

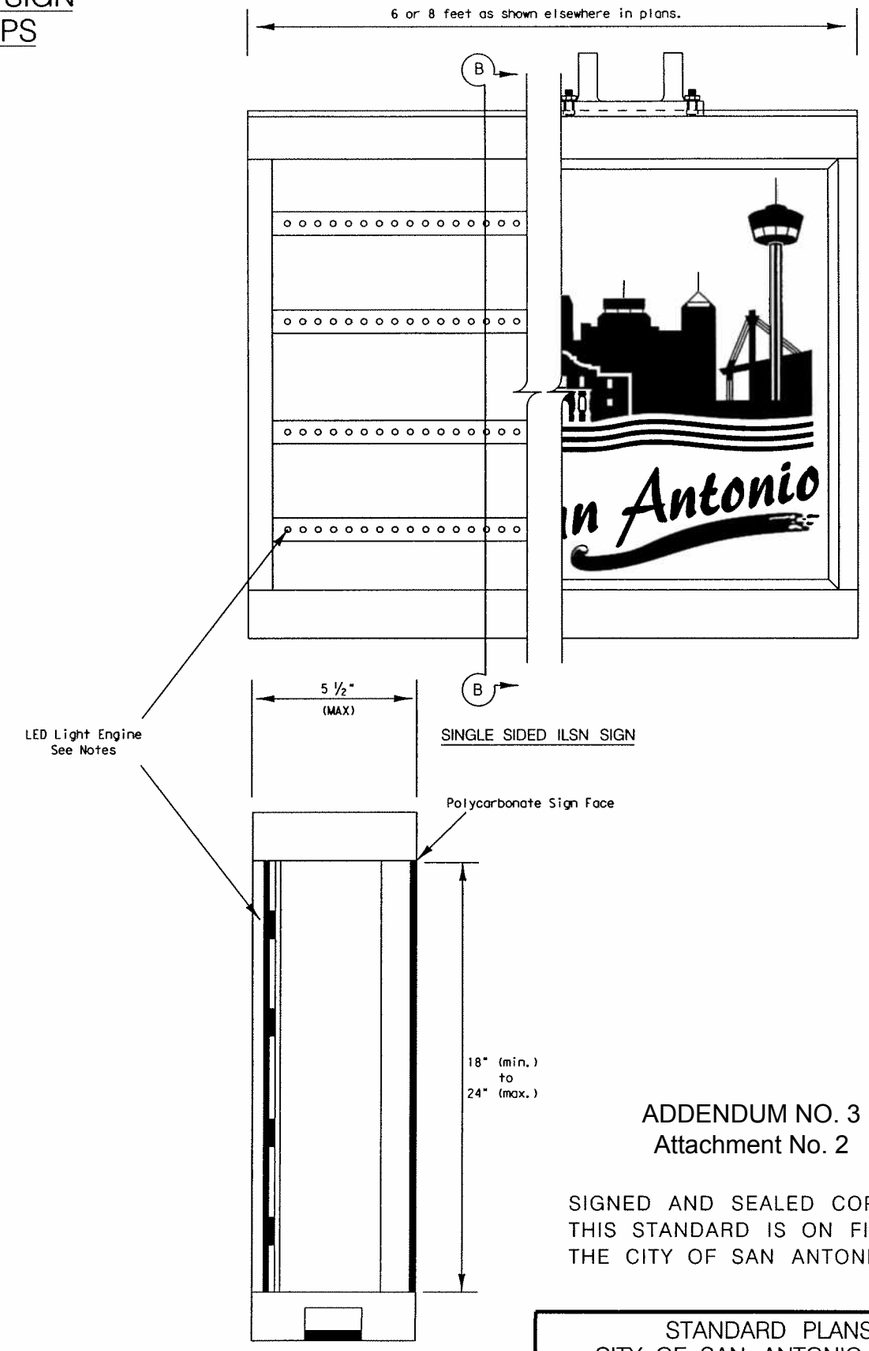

SINGLE SIDED ILSN SIGN

Section B-B

SINGLE SIDED ILSN SIGN

ADDENDUM NO. 3
Attachment No. 2

SIGNED AND SEALED COPIES OF THIS STANDARD IS ON FILE WITH THE CITY OF SAN ANTONIO.

NO.	DATE	REVISION	DRWN.	CHKD.	APPR.

STANDARD PLANS
CITY OF SAN ANTONIO, TEXAS
DEPARTMENT OF PUBLIC WORKS

ILSN SIGN DETAILS
(ILSN–1)

180A

DRAWN BY: M. GLASER	DATE	REVISIONS	SCALE: N.T.S.
CHECKED BY: GILMER GASTON, P.E., P.T.O.E.			DATE:
			SHEET: 1 OF 3

8/30/2007

p:\62\01\24\Modified-COSA-SLBM.dgn

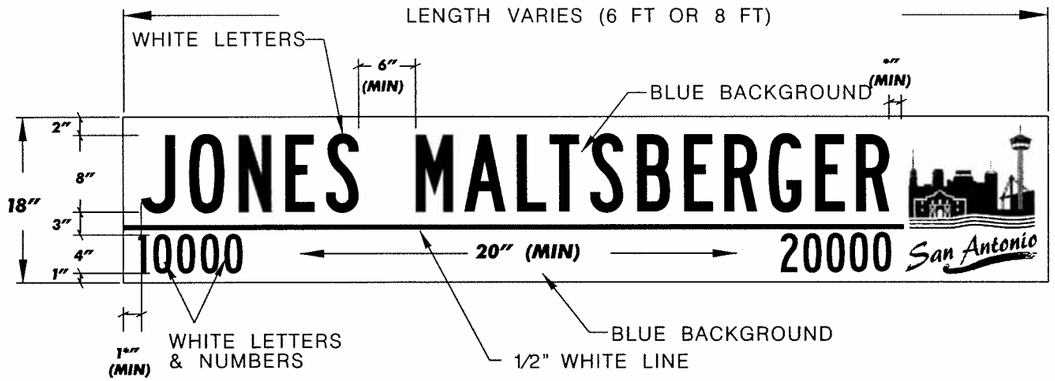

TYPICAL METRO ILSN SIGN

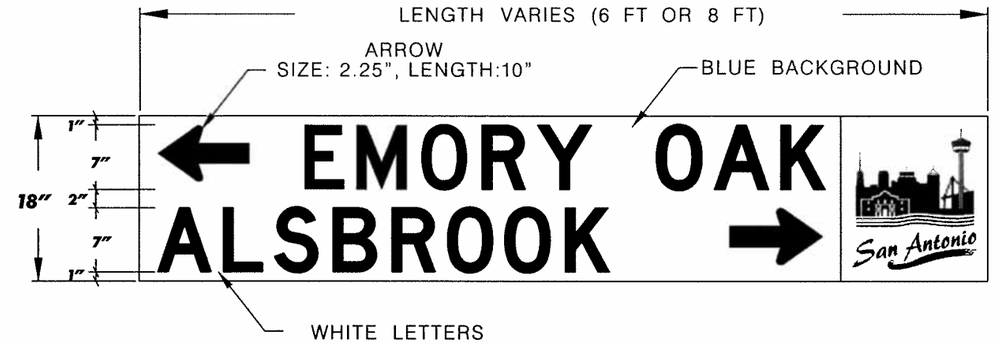

TYPICAL DOUBLE STREET NAME ILSN SIGN

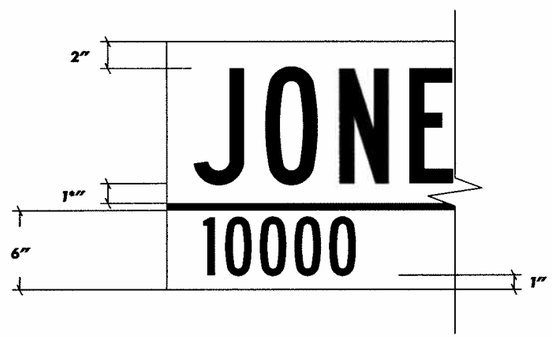

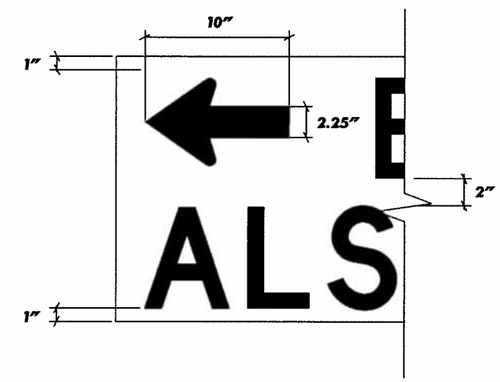

HEIGHT	18"
LENGTH	72" (6 FT) OR 96" (8 FT)
SUBSTRATE	POLYCARBONATE, TRANSLUCENT WHITE
THICKNESS	0.120"
SIGN FACE MATERIALS	BLUE FILM OVER WHITE POLYCARBONATE LOGO-A AS REQUIRED BY CITY
BLOCK NUMBERS	FONT: 4" SERIES D
LEGEND	SERIES D (USUAL) SERIES C OR B FOR MAXIMUM LENGTH 8 FT SIGN, AS NEEDED
COLOR	WHITE LEGEND ON BLUE BACKGROUND

LOGO A

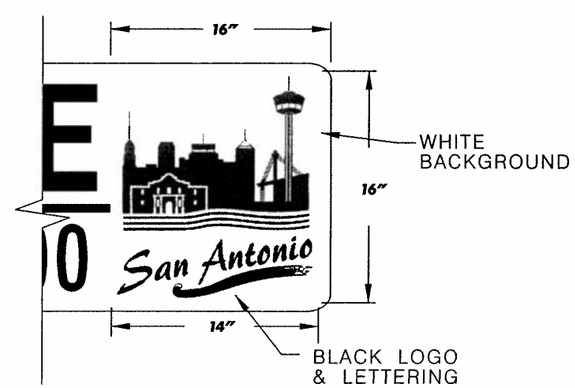

SIGN LOGO PLAQUE
OTHER LOGO PLAQUES MAY BE SPECIFIED

ADDENDUM NO. 3
Attachment No. 2

SIGNED AND SEALED COPIES OF THIS STANDARD IS ON FILE WITH THE CITY OF SAN ANTONIO.

STANDARD PLANS
CITY OF SAN ANTONIO, TEXAS
DEPARTMENT OF PUBLIC WORKS

ILSN SIGN DETAILS
(ILSN-2)

180B

NO.	DATE	REVISION	DRWN.	CHKD.	APPR.

DRAWN BY: M. GLASER	DATE	REVISIONS	SCALE: N.T.S.
CHECKED BY: GILMER GASTON, P.E., P.T.O.E.			DATE:
			SHEET: 2 OF 3

8302007

p:\62\01\24\Modified-COSA-SLBM.dgn

SINGLE SIDED RIGID MOUNTING DETAILS
(FOR RETROFIT LOCATIONS)

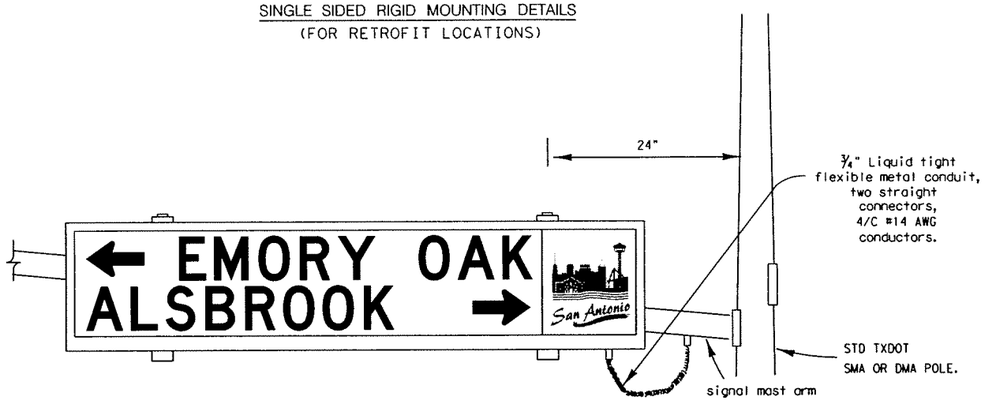

ILSN HANGING SIGN MOUNTING DETAILS
(FOR NEW INSTALLATIONS)

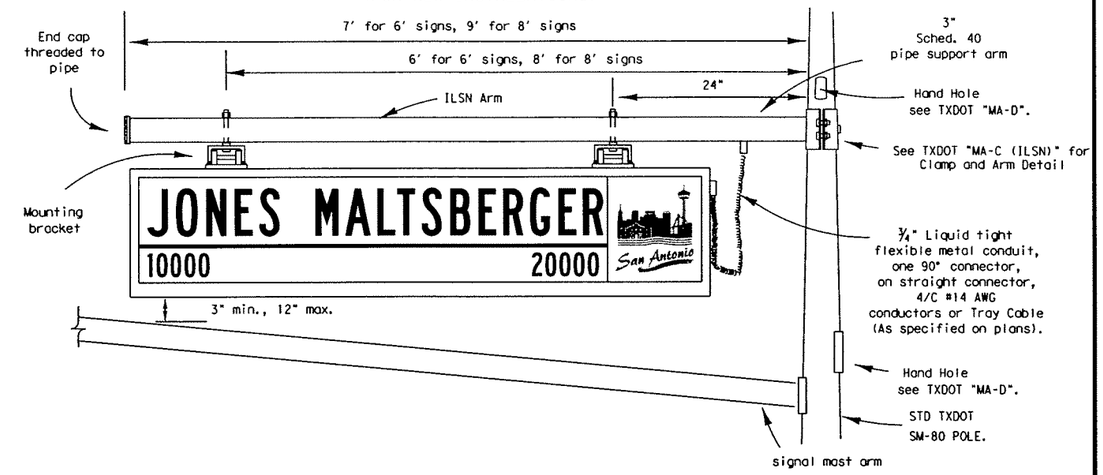

TYPICAL SINGLE SIDED ILSN SIGN PLACEMENT

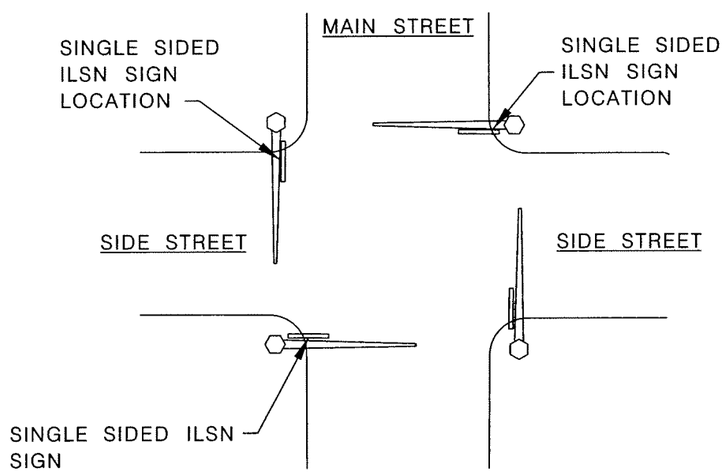

TYPICAL DOUBLE SIDED ILSN SIGN PLACEMENT

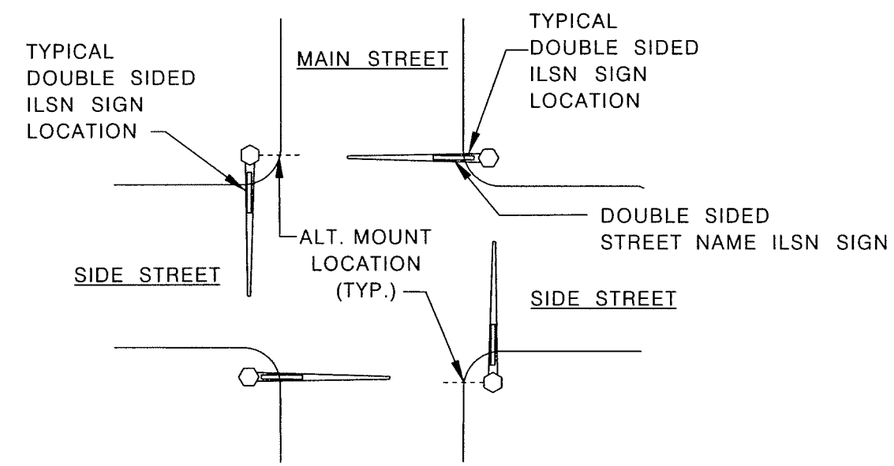

MOUNTING BRACKET

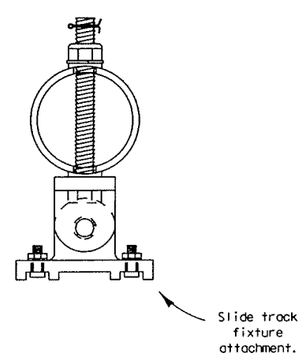

Section C-C

SINGLE SIDED SIGN MOUNTING BRACKET

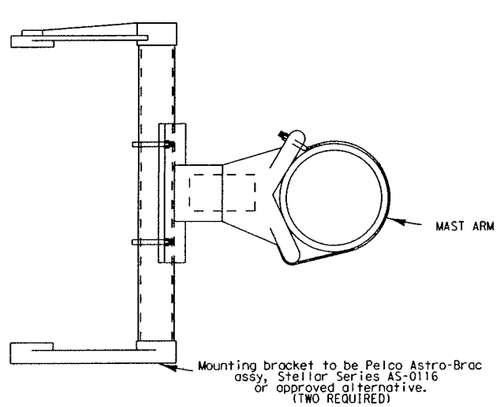

DOUBLE SIDED SIGN MOUNTING

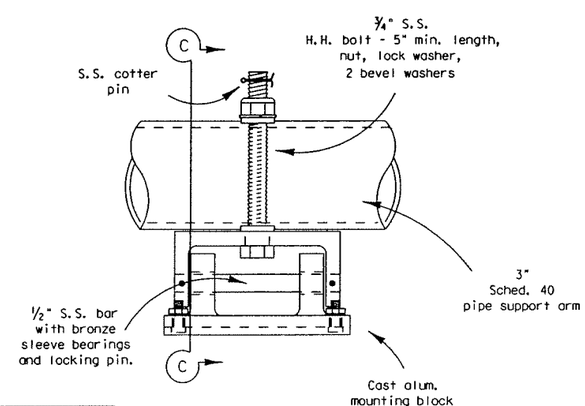

ADDENDUM NO. 3
Attachment No. 2

SIGNED AND SEALED COPIES OF THIS STANDARD IS ON FILE WITH THE CITY OF SAN ANTONIO.

NO.	DATE	REVISION	DRWN.	CHKD.	APPR.

STANDARD PLANS
CITY OF SAN ANTONIO, TEXAS
DEPARTMENT OF PUBLIC WORKS

ILSN SIGN DETAILS
(ILSN–3)

180C

DRAWN BY: M. GLASER	DATE	REVISIONS	SCALE: N.T.S.
CHECKED BY: GILMER GASTON, P.E., P.T.O.E.			DATE:
			SHEET: 3 OF 3

8/30/2007

p:\62\01\24\Modified-COSA-SLBM.dgn

CPS ENERGY

CONSTRUCTION COMPLETED
BY: _____
DATE: _____
CONST CTR: _____

UNDERGROUND DISTRIBUTION ENGINEERING					
WORK REQUEST NO		WORK REQUEST TITLE / ADDRESS			
1871782		36TH BILLY MITCHELL INFRAS./CIVIC			
PLANNED BY	PHONE	CELL PHONE	DATE PLANNED	NOTES	
R. CIFUENTES	353-2790	288-1547			
REVIEWED BY	PHONE	CELL PHONE	DATE REVIEWED		
T. J. GARZA	353-2206	414-4248			
OH DESIGNER (TXAUE)	PHONE	CELL PHONE			
B. LEX		857-7476			
GRID NO				SCALE	PAGE
2105914-13687644				N.T.S.	1 OF 1

STATE OF TEXAS
SHEILA M. CASEY
105915
LICENSED
PROFESSIONAL ENGINEER

Sheila Casey
03/13/2015

CIVIC IMPROVEMENT PROJECT
(UG ELECTRIC INFRASTRUCTURE)

IMPORTANT
EXCAVATION SAFETY PLAN AND PROCEDURES

CPS ENERGY CONSTRUCTION PERSONNEL, CPS ENERGY'S CONTRACTOR, OR CUSTOMER'S CONTRACTOR SHALL REVIEW THESE PLANS, SKETCHES, SPECIFICATIONS AND ANTICIPATED EXCAVATION SITES WITHIN THE PROJECT WORK AREA IN ORDER TO IDENTIFY EXCAVATIONS THAT WILL REQUIRE AN EXCAVATION SAFETY PLAN AND PROCEDURES. THE EXCAVATION SAFETY PLAN AND PROCEDURES SHALL MEET OR EXCEED ALL REQUIREMENTS AS IDENTIFIED IN THE OCCUPATIONAL SAFETY AND HEALTH ADMINISTRATION'S (OSHA) STANDARDS 29 CFR PART 1926 SUBPART P–EXCAVATIONS (04-04 EDITION). SPECIFICALLY, THE RESPONSIBLE PARTY SHALL DEVELOP AND IMPLEMENT AN EXCAVATION SAFETY PROGRAM IN ACCORDANCE WITH OSHA'S STANDARDS GOVERNING THE PRESENCE AND ACTIVITIES OF INDIVIDUALS WORKING IN AND AROUND ANY EXCAVATION.

THIS PAGE REVISED
DESTROY COPIES OF THIS PAGE WITH DATE PRIOR TO:
3-13-15 REVISED COVER PAGE DRAWING TO INCLUDE FILL SCHEDULE AND REVISED PAGE 3 OF 3 DUE TO TEXT MODIFICATION ON DUCTLINE DETAIL.

CONTRACTOR NOTE:

I. CONTRACTOR SHALL NOT PENETRATE ENERGIZED CONDUITS. CONTRACTOR TO COORDINATE WITH CPS PERSONNEL.

II. CONTRACTOR TO STUB OUT CONDUITS.

III. CONTRACTOR SHALL NOT PENETRATE EXISTING MANHOLE. COORDINATE PENETRATION WITH CPS ENERGY PERSONNEL WHO WILL PERFORM THIS TASK.

INSPECTION NOTE:

CPS ENERGY IS TO INSTALL THE RISER POLE AND STANDOFF BRACKETS BEFORE THE CONTRACTOR INSTALLS CONDUIT. IT IS ESSENTIAL THAT AN INSPECTION OF THE SLAB AND DUCTLINE BE MADE BY A CPS ENERGY INSPECTOR PRIOR TO AND AFTER THE POURING OF CONCRETE. CALL 353-3373 TO ARRANGE FOR THE INSPECTION. TWENTY-FOUR HOURS ADVANCE NOTICE IS REQUIRED. WHEN CALLING FOR AN INSPECTION BE PREPARED TO REFERENCE WORK REQUEST NUMBER AND ADDRESS SHOWN ON THIS COPY. CALL BETWEEN 7:30 A.M. AND 2:00 P.M. MONDAY – FRIDAY.

NOTE:
CPS ENERGY TO PROVIDE 4/0 CU. BARE NEUTRAL FOR DUCTBANK.
(SEE DUCTLINE DETAILS)

SUMMARY OF MATERIALS FURNISHED BY CPS ENERGY

Description	Estimated Quantity (FT)
4/0 Bare CU Neutral	10916

DUCTBANK SCHEDULE

Construction Point		Install		
From	To	Ductbank	Ductline Detail	Length (FT)
1	40	3-4" & 1-2" & 1 Neutral	A	10
4	40	3-4" & 1-2" & 2 Neutral	D	5
40	3	6-4" & 2-2" & 3 Neurals	C	15
2	3	3-4" & 1-2" & 1 Neutral	A	50
3	5	9-4" & 3-2" & 4 Neutral	J	183
5	7	9-4" & 3-2" & 4 Neurals	J	260
7	8	4-4" & 4 Neutrals	G	185
5	6	9-4" & 3-2" & 4 Neurals	J	10
5	9	21-4" & 3-2' & 7 Neutrals	H	13
9	10	12-4" & 1-2' & 3 Neutrals	I	15
9	11	9-4" & 2-2" & 4 Neurals	K	250
11	12	9-4" & 2-2" & 4 Neurals	K	250
12	14	9-4" & 3-2" & 4 Neurals	J	256
12	13	9-4" & 3-2" & 4 Neurals	J	10
12	15	21-4" & 3-2' & 7 Neutrals	H	13
15	16	12-4" & 1-2" & 3 Neutrals	I	15
15	17	9-4" & 2-2" & 4 Neurals	K	300
17	18	9-4" & 2-2" & 4 Neurals	K	300
18	19	12-4" & 1-2" & 3 Neutrals	I	15
18	20	21-4" & 3-2' & 7 Neutrals	H	13
20	21	9-4" & 3-2" & 4 Neurals	J	10
20	22	18-4" & 3-2' & 7 Neutrals	N	13
22	23	9-4" & 1-2" & 3 Neurals	F	15
22	24	9-4" & 2-2" & 4 Neurals	K	10
20	25	9-4" & 3-2" & 4 Neurals	J	290
25	26	9-4" & 3-2" & 4 Neurals	J	15
26	27	8-4" & 3-2" & 4 Neurals	E	5
26	28	1-4"	M	20
28	29	1-2 1/2"	P	10
25	30	8-4" & 1-2" & 8 Neurals	O	123
30	31	4-4" & 4 Neutrals	G	15
30	32	4-4" & 1-2" & 4 Neurals	B	20
14	50	2-3"	L	10
50	51	2-3"	L	10

MANHOLE AND SLAB SCHEDULE

Construction Point	Description	Size (FT)	QTY (EA)
5	Manhole	8x8x10	1
7	Manhole	8x8x8	1
11	Manhole	8x8x8	1
12	Manhole	8x8x10	1
14	Manhole	8x8x8	1
17	Manhole	8x8x8	1
20	Manhole	8x8x10	1
25	Manhole	8x8x8	1
10	Switchgear Slab	7x12	1
16	Switchgear Slab	7x12	1
19	Switchgear Slab	7x12	1
23	Switchgear Slab	7x10	1
28	Transformer Slab	44"x56"	1

SUMMARY OF BID MATERIALS

Bid Item Description	Unit of Measure	Approx Quantity
Ductbank - 3-4" & 1-2" & 1 Neutral	FT	60
Ductbank - 4-4" & 1-2" &4 Neutral	FT	20
Ductbank - 6-4" & 2-2' & 3Neurals	FT	15
Ductbank - 8-4" & 3-2" & 4 Neurals	FT	5
Ductbank - 3-4" & 1-2" & 2 Neurals	FT	5
Ductbank - 9-4" & 1-2" & 3 Neurals	FT	15
Ductbank - 4-4" & 4 Neutrals	FT	200
Ductbank - 21-4" & 3-2" & 7 Neutrals	FT	39
Ductbank - 12-4" & 1-2" & 3 Neutrals	FT	45
Ductbank - 9-4" & 3-2" & 4 Neutrals	FT	1034
Ductbank - 9-4" & 2-2" & 4 Neurals	FT	1110
Ductbank - 2-3"	FT	20
1-4" PVC Conduit	FT	20
Ductbank- 18-4" & 3-2' & 7 Neutrals	FT	13
Ductbank - 8-4" & 1-2" & 8 Neutrals	FT	123
1-2 1/2" PVC Conduit	FT	10
Manhole - 8'x8'x10'	EA	3
Manhole - 8'x8'x8'	EA	5
Switchgear Slab - 7'x12'	EA	3
Switchgear Slab - 7'x10'	EA	1
Transformer Slab - 44" x 56"	EA	1
UG Electric Mobilization	LS	1
Trench Excavation Protection (Manhole and Trench)	FT&EA	2694
Flexible Pavement Structure Repair	SQ YD	190

Note: Contractor shall include all materials, supplies, equipment, and labor necessary to build and install underground infrastructure. Contractor shall exclude the material cost for the 4/0 Bare CU Neural.

Fill Schedule

Construction Point		Fill Description	Length (FT)	Ductline Detail
From	To			
1	40	NATURAL BACKFILL	10	A
4	40	NATURAL BACKFILL	5	D
40	3	FLOWABLE FILL	15	C
2	3	NATURAL BACKFILL	50	A
3	5	FLOWABLE FILL	183	J
5	7	FLOWABLE FILL	260	J
7	8	FLOWABLE FILL	185	G
5	6	FLOWABLE FILL	10	J
5	9	FLOWABLE FILL	13	H
9	10	NATURAL BACKFILL	15	I
9	11	NATURAL BACKFILL	250	K
11	12	NATURAL BACKFILL	250	K
12	14	FLOWABLE FILL	256	J
12	13	NATURAL BACKFILL	10	J
12	15	NATURAL BACKFILL	13	H
15	16	NATURAL BACKFILL	15	I
15	17	NATURAL BACKFILL	300	K
17	18	NATURAL BACKFILL	300	K
18	19	NATURAL BACKFILL	15	I
18	20	NATURAL BACKFILL	13	H
20	21	NATURAL BACKFILL	10	J
20	22	NATURAL BACKFILL	13	N
22	23	NATURAL BACKFILL	15	F
22	24	NATURAL BACKFILL	10	K
20	25	FLOWABLE FILL	290	J
25	26	FLOWABLE FILL	15	J
26	27	FLOWABLE FILL	5	E
26	28	FLOWABLE FILL	20	M
28	29	FLOWABLE FILL	10	P
25	30	FLOWABLE FILL	123	O
30	31	FLOWABLE FILL	15	G
30	32	FLOWABLE FILL	20	B
14	50	FLOWABLE FILL	10	L
50	51	FLOWABLE FILL	10	L
9	9	FLOWABLE FILL (MANHOLE)		
11	11	FLOWABLE FILL (MANHOLE)		
14	14	FLOWABLE FILL (MANHOLE)		
17	17	FLOWABLE FILL (MANHOLE)		
18	18	FLOWABLE FILL (MANHOLE)		
25	25	FLOWABLE FILL (MANHOLE)		

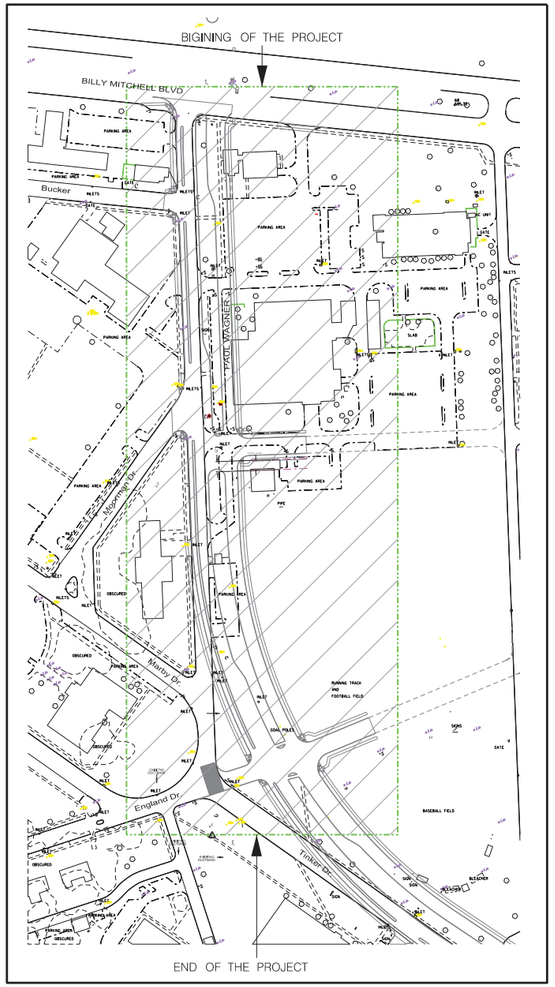

CPS ENERGY

CONSTRUCTION COMPLETED
BY: _____
DATE: _____
CONST CTR: _____

UNDERGROUND DISTRIBUTION ENGINEERING					
WORK REQUEST NO		WORK REQUEST TITLE / ADDRESS			
1871782		36TH BILLY MITCHELL INFRAS./CIVIC			
PLANNED BY	PHONE	CELL PHONE	DATE PLANNED	NOTES	
R. CIFUENTES	353-2790	288-1547		INSTALLATION OF 8 MANHOLES AND 3200 FT OF DUCTBANK W/OH WR#1801001	
REVIEWED BY	PHONE	CELL PHONE	DATE REVIEWED		
T. J. GARZA	353-2206	414-4248			
OH DESIGNER (TXAUE)	PHONE	CELL PHONE			
B. LEX		857-7476			
GRID NO				SCALE	PAGE
2105914-13687644				N.T.S.	1 OF 3

STATE OF TEXAS
SHEILA M. CASEY
105915
LICENSED
PROFESSIONAL ENGINEER

Sheila Casey
03/13/2015

THIS PAGE REVISED

DESTROY COPIES OF THIS PAGE WITH DATE PRIOR TO:
3-13-15 REVISED COVER PAGE
DRAWING TO INCLUDE
FILL SCHEDULE AND REVISED
PAGE 3 OF 3 DUE TO
TEXT MODIFICATION ON
DUCTLINE DETAIL.

CONTRACTOR NOTE:

I. CONTRACTOR SHALL NOT PENETRATE ENERGIZED CONDUITS. CONTRACTOR TO COORDINATE WITH CPS PERSONNEL.

II. CONTRACTOR TO STUB OUT CONDUITS.

III. CONTRACTOR SHALL NOT PENETRATE EXISTING MANHOLE COORDINATE. PENETRATION WITH CPS ENERGY PERSONNEL WHO WILL PERFORM THIS TASK.

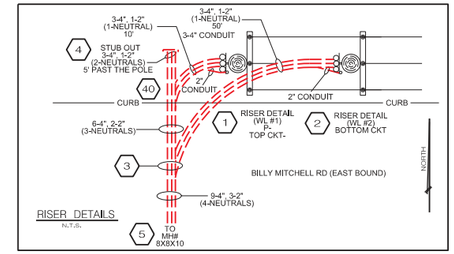

RISER DETAILS
N.T.S.

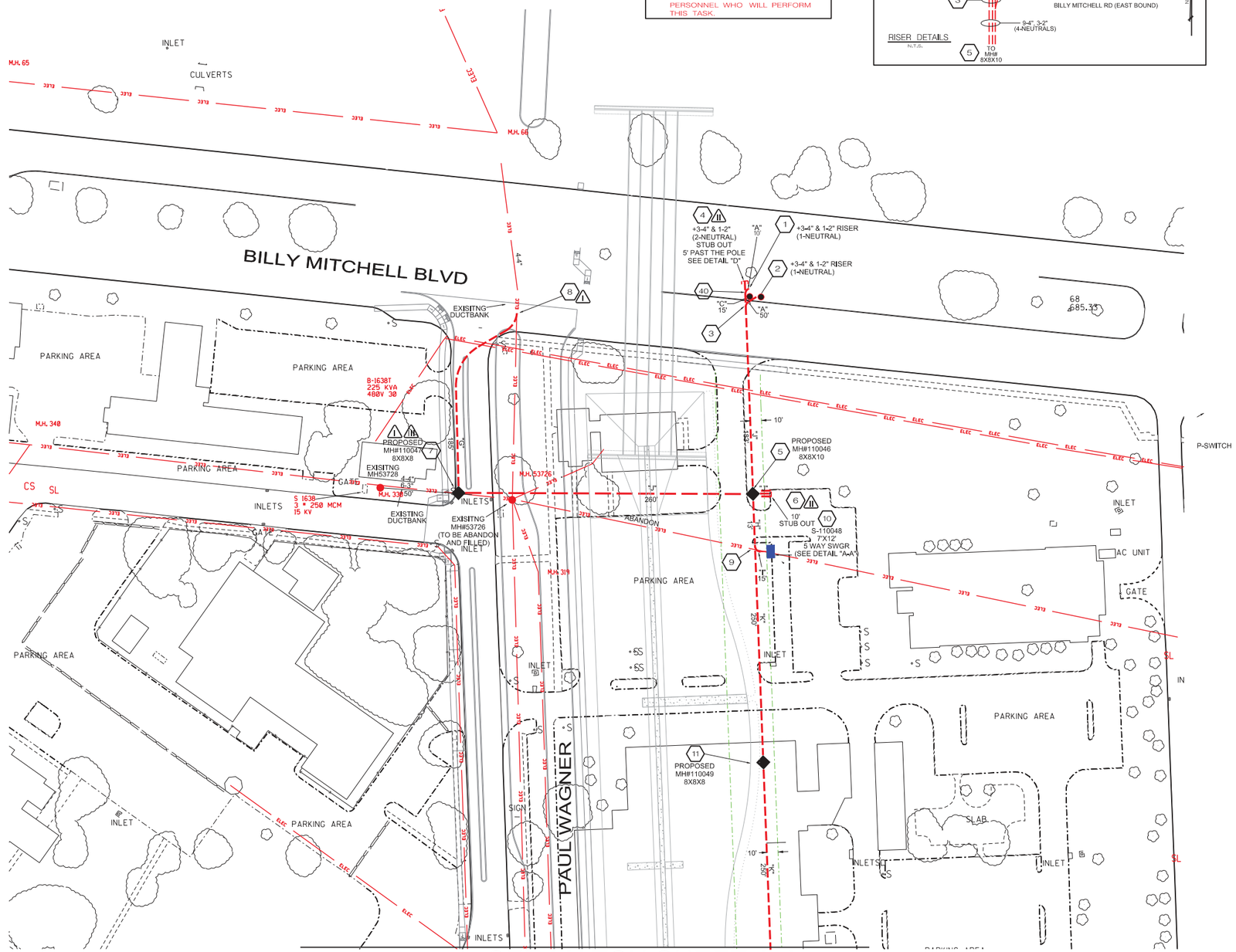

CPS ENERGY

CONSTRUCTION COMPLETED
BY: _____
DATE: _____
CONST CTR: _____

UNDERGROUND DISTRIBUTION ENGINEERING					
WORK REQUEST NO		WORK REQUEST TITLE / ADDRESS			
1871782		36TH BILLY MITCHELL INFRAS./CIVIC			
PLANNED BY	PHONE	CELL PHONE	DATE PLANNED	NOTES	
R. CIFUENTES	353-2790	288-1547		INSTALLATION OF 8 MANHOLES AND 3200 FT OF DUCTBANK ASSOC. W/OH WR#1801001	
REVIEWED BY	PHONE	CELL PHONE	DATE REVIEWED		
T. J. GARZA	353-2206	414-4248			
OH DESIGNER (TXAUE)	PHONE	CELL PHONE			
B. LEX		857-7476			
GRID NO				SCALE	PAGE
2105914-13687644				N.T.S.	2 OF 3

STATE OF TEXAS
SHEILA M. CASEY
105915
LICENSED
PROFESSIONAL ENGINEER

Sheila Casey
03/13/2015

THIS PAGE REVISED
DESTROY COPIES OF THIS PAGE WITH DATE PRIOR TO: 3-13-15 REVISED COVER PAGE DRAWING TO INCLUDE FILL SCHEDULE AND REVISED PAGE 3 OF 3 DUE TO TEXT MODIFICATION ON DUCTLINE DETAIL.

CONTRACTOR NOTE:

I. CONTRACTOR SHALL NOT PENETRATE ENERGIZED CONDUITS. CONTRACTOR TO COORDINATE WITH CPS PERSONNEL.

II. CONTRACTOR TO STUB OUT CONDUITS.

III. CONTRACTOR SHALL NOT PENETRATE EXISTING MANHOLE. COORDINATE PENETRATION WITH CPS ENERGY PERSONNEL WHO WILL PERFORM THIS TASK.

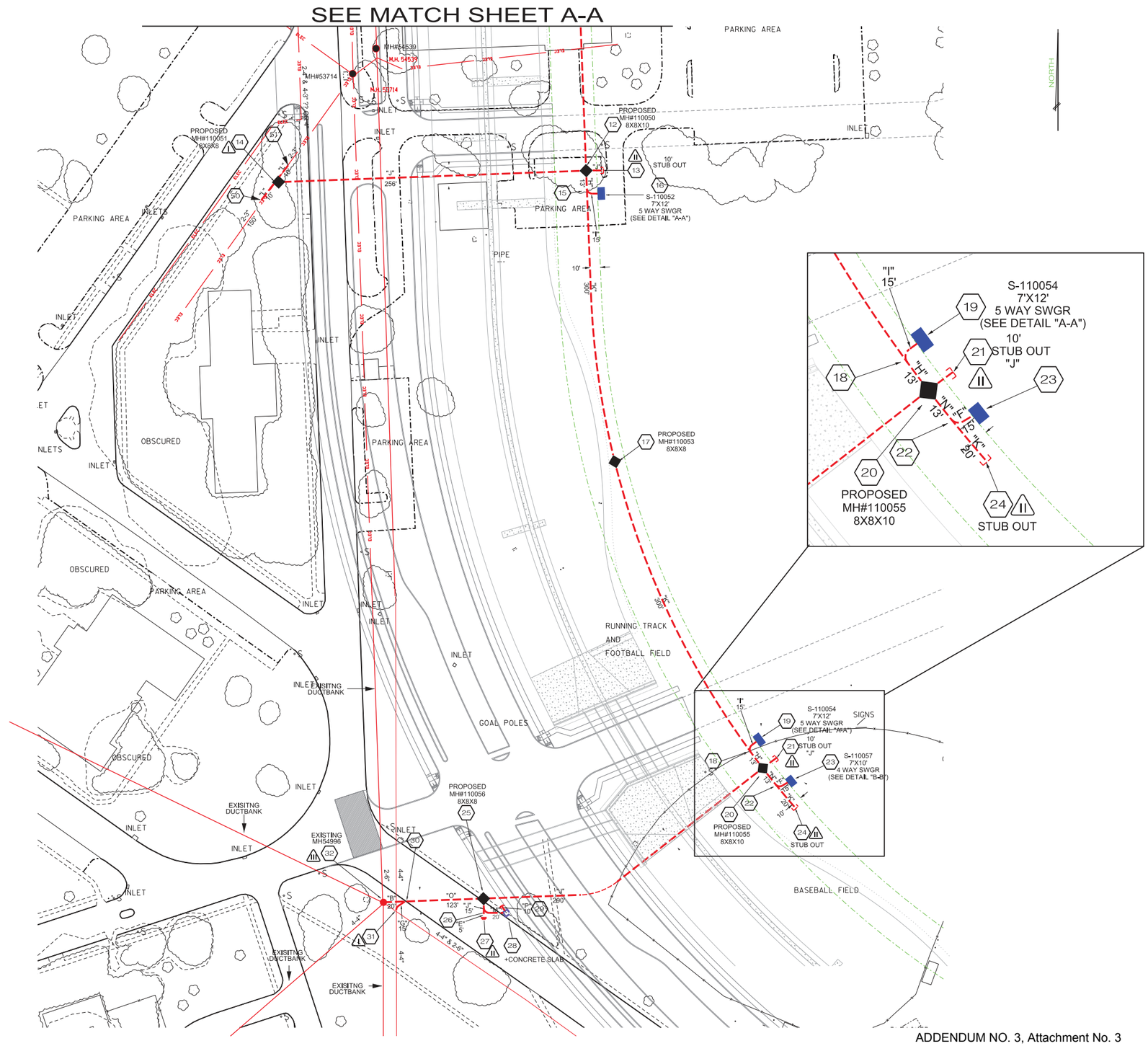

CONSTRUCTION COMPLETED
BY: ______
DATE: ______
CONST CTR: ______

UNDERGROUND DISTRIBUTION ENGINEERING

WORK REQUEST NO	WORK REQUEST TITLE / ADDRESS			
1871782	36TH BILLY MITCHELL INFRAS./CIVIC			
PLANNED BY	PHONE	CELL PHONE	DATE PLANNED	NOTES
R. CIFUENTES	353–2790	288–1547		TRENCH, MANHOLE DETAILS AND SPECIFICATIONS
REVIEWED BY	PHONE	CELL PHONE	DATE REVIEWED	
T. J. GARZA	353–2206	414–4248		
OH DESIGNER (TXAUE)	PHONE	CELL PHONE		
B. LEX		857–7476		
GRID NO			SCALE	PAGE
2105914–13687644			N.T.S.	3 OF 3

STATE OF TEXAS
SHEILA M. CASEY
105915
LICENSED
PROFESSIONAL ENGINEER

Sheila Casey
03/13/2015

NOTES:
1. CONCRETE SHALL HAVE A MIN. COMPRESSIVE STRENGTH OF 3000 PSI AT 28 DAYS.
2. THE REINFORCING STEEL SHALL BE #5 AND SHALL HAVE STRENGTH FY=60 KSI.
3. THE MINIMUM COVER FROM FINAL GRADE TO THE TOP OF THE MANHOLE SHALL BE 36".

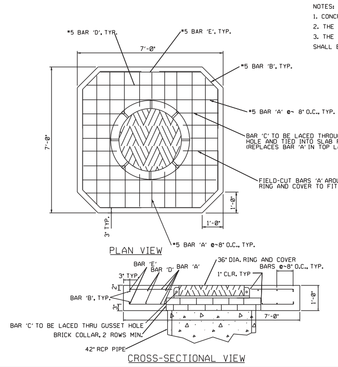

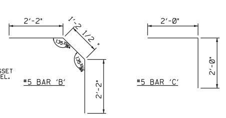

REINFORCING STEEL SCHEDULE

BAR	QTY	SIZE	SHAPE	SPACING	LENGTH	EST WT (lbs.)	REMARKS
A	20	#5	STRAIGHT	~8" O.C.	6'-6"	137	FIELD CUT TO FIT AS REQUIRED
B	8	#5		AS SHOWN	5'-6½"	46	
C	4	#5		AS SHOWN	4'-0"	17	
D	8	#5	STRAIGHT	AS SHOWN	6'-2"	51	PLACE TO FIT FORMWORK
E	8	#5	STRAIGHT	AS SHOWN	4'-9"	40	
					TOTAL WT.= 291lbs		

OCTAGON APRON 7' X 7' X 1'

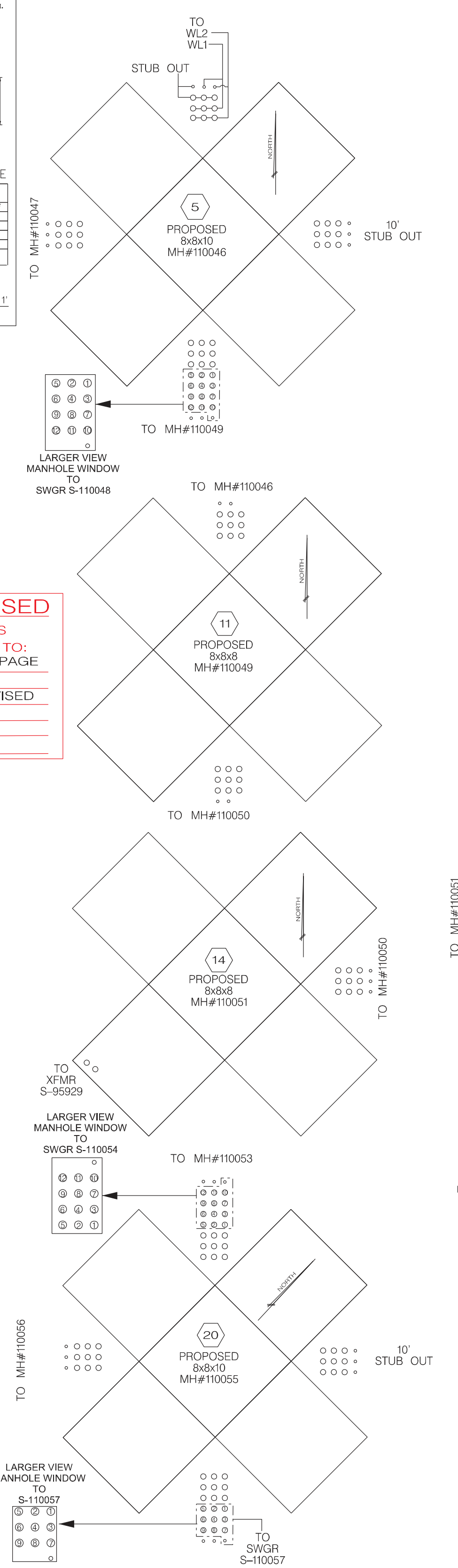

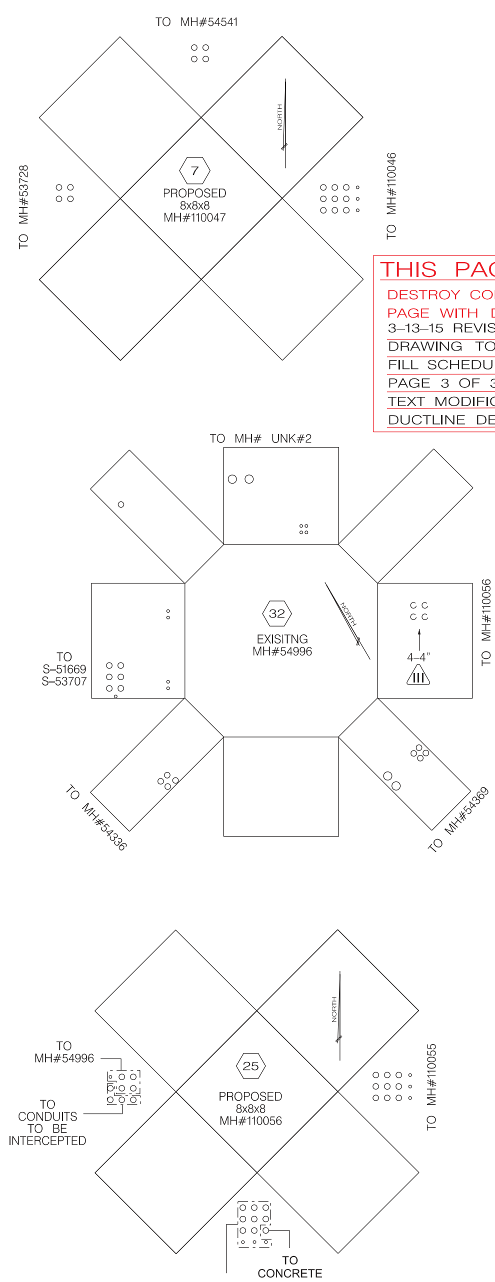

THIS PAGE REVISED
DESTROY COPIES OF THIS PAGE WITH DATE PRIOR TO:
3–13–15 REVISED COVER PAGE DRAWING TO INCLUDE FILL SCHEDULE AND REVISED PAGE 3 OF 3 DUE TO TEXT MODIFICATION ON DUCTLINE DETAIL.

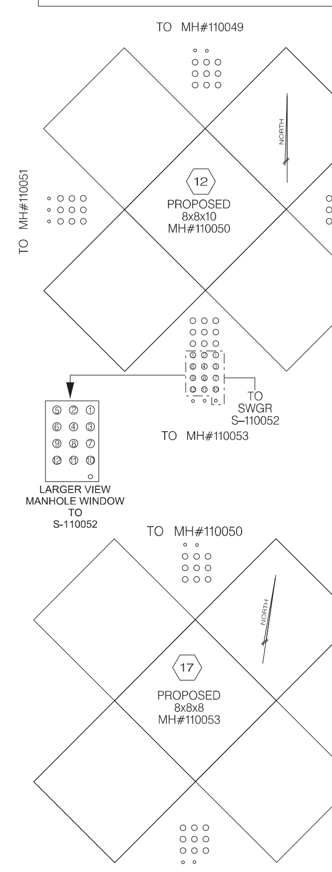

8' X 8' X 8' MANHOLE SPECIFICATIONS

Manhole (vaults) furnished under this request will be used as an enclosure for energized underground primary cables used to supply electrical energy to residential, commercial, of industrial loads.

All components shall meet traffic bearing design loads as specified in HS20–44 bridge loading in accordance with American Association of State Highway Officials Standard Specifications.

Construction of the unit shall be such that it can be lifted and lowered into position. Suitable lift bolts shall be provided on both top and lower sections of the vault as indicated.

Manufacturer shall supply an adequate amount of joint sealing compound for each manhole (vault). The sealing compound is placed in the grooves to act as a water tight joining of precast sections.

The floor will have a slight slope towards the center to provide drainage into the sump hole. Sump hole will be 12" deep with bottom sealed.

Pulling eyes for bottom section shall not be in the floor. The eyes should be in the corners below the conduit knockouts.

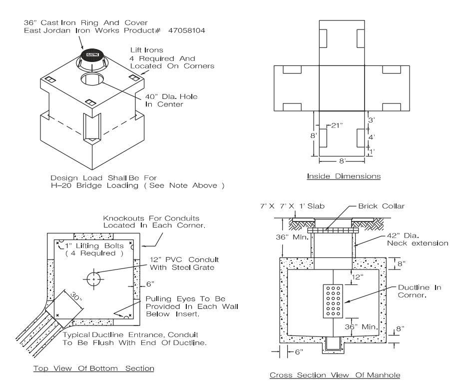

Customer Notes

Customer shall supply and install a traffic bearing cast iron ring and cover marked "ELECTRIC". The ring and cover shall have a 36" diameter opening.

Customer shall supply and install a 42" Diameter Neck extension, in addition to a brick collar, (Plastered and sealed) 2 rows high min. 5 row high max., between the roof of the manhole and the bottom of the ring and cover. The minimum cover from final grade to top of manhole shall be 36".

Customer shall install a 7' X 7' X 1' concrete apron around the ring and cover. See apron detail

Conduits entering manhole shall have bell ends.

Customer shall supply and install steel grate for sump opening.

Customer shall supply and install 300 PSI flowable fill around entire manhole up to the top of the neck.

Customer must ensure manhole is level by stabilizing floor with 4 inches of compacted base material while providing a 24" by 24" square void required for sump pump by using 2x4 inch lumber.

8' X 8' X 10' MANHOLE SPECIFICATIONS

Manhole (vaults) furnished under this request will be used as an enclosure for energized underground primary cables used to supply electrical energy to residential, commercial, of industrial loads.

All components shall meet traffic bearing design loads as specified in HS20–44 bridge loading in accordance with American Association of State Highway Officials Standard Specifications.

Construction of the unit shall be such that it can be lifted and lowered into position. Suitable lift bolts shall be provided on both top and lower sections of the vault as indicated.

Manufacturer shall supply an adequate amount of joint sealing compound for each manhole (vault). The sealing compound is placed in the grooves to act as a water tight joining of precast sections.

The floor will have a slight slope towards the center to provide drainage into the sump hole. Sump hole will be 12" deep with bottom sealed.

Pulling eyes for bottom section shall not be in the floor. The eyes should be in the corners below the conduit knockouts.

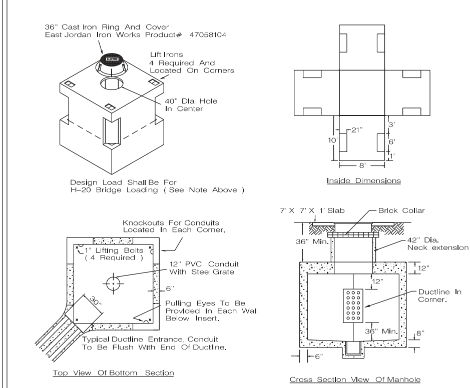

Customer Notes

Customer shall supply and install a traffic bearing cast iron ring and cover marked "ELECTRIC". The ring and cover shall have a 36" diameter opening.

Customer shall supply and install a 42" Diameter Neck extension, in addition to a brick collar, (Plastered and sealed) 2 rows high min. 5 row high max., between the roof of the manhole and the bottom of the ring and cover. The minimum cover from final grade to top of manhole shall be 36".

Customer shall install a 7' X 7' X 1' concrete apron around the ring and cover. See apron detail

Conduits entering manhole shall have bell ends.

Customer shall supply and install steel grate for sump opening.

Customer shall supply and install 300 PSI flowable fill around entire manhole up to the top of the neck.

Customer must ensure manhole is level by stabilizing floor with 4 inches of compacted base material while providing a 24" by 24" square void required for sump pump by using 2x4 inch lumber.

PREFAB PAD CONCRETE 46"X 50"
N.T.S.

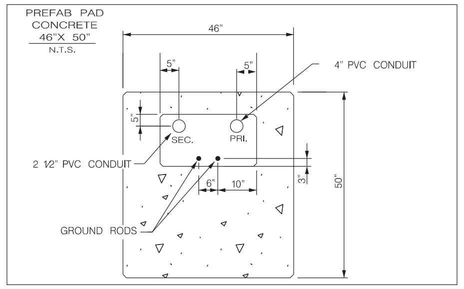

CONTRACTOR DUCTLINE DEPTH NOTE:

1. PROVIDE ELECTRIC CONDUIT TO A DEPTH CORRESPONDING TO AT LEAST 36" FROM THE FINISHED GRADE INDICATED IN THESE CONTRACT DOCUMENTS.

2. CONTRACTOR TO CONTACT CPS ENERGY AND COORDINATE ANY ADJUSTMENTS TO GRADE OF DUCT LINES ARE NEEDED IN ORDER TO GRADUALLY TRANSITION BENEATH ANY EXISTING REMAINING UTILITIES.

3. COORDINATE ELECTRIC CONDUIT AND ALL RELATED WORK WITH OTHER WORK IN THESE CONTRACT DOCUMENTS AND INCLUDE ALL COST IN THE MOST CLOSELY RELATED BID ITEM.

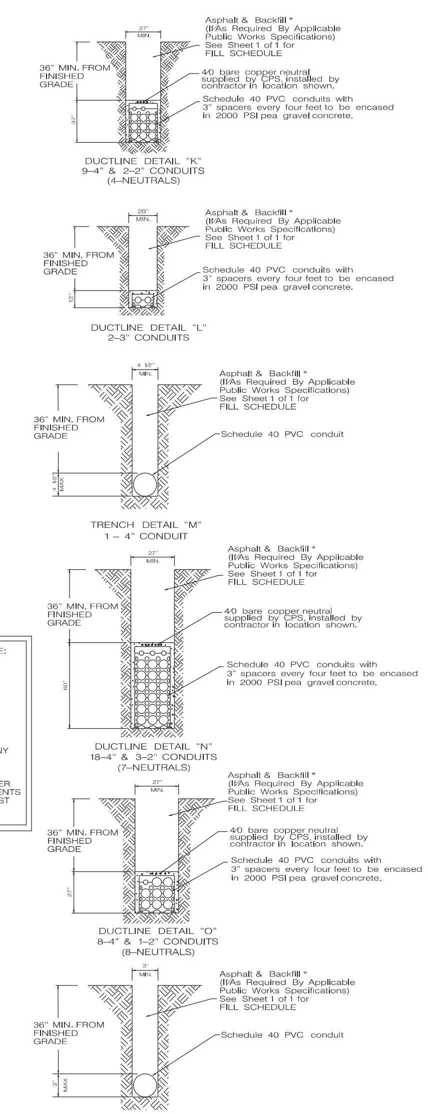

DUCTLINE DETAIL "K" 9–4" & 2–2" CONDUITS (4–NEUTRALS)

DUCTLINE DETAIL "L" 2–3" CONDUITS

TRENCH DETAIL "M" 1 – 4" CONDUIT

DUCTLINE DETAIL "N" 18–4" & 3–2" CONDUITS (7–NEUTRALS)

DUCTLINE DETAIL "O" 8–4" & 1–2" CONDUITS (8–NEUTRALS)

TRENCH DETAIL "P" 1 – 2 1/2" CONDUIT

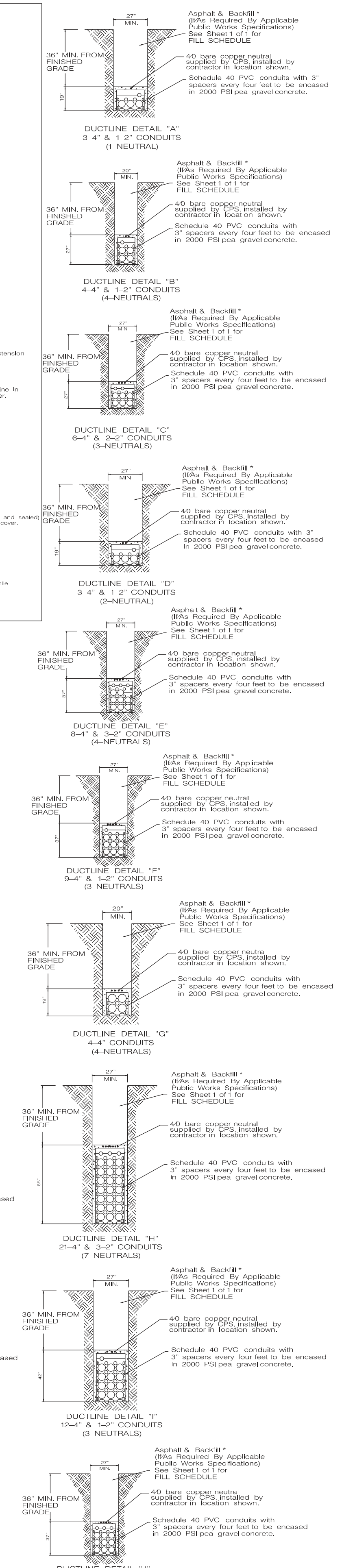

DUCTLINE DETAIL "A" 3–4" & 1–2" CONDUITS (1–NEUTRAL)

DUCTLINE DETAIL "B" 4–4" & 1–2" CONDUITS (4–NEUTRALS)

DUCTLINE DETAIL "C" 6–4" & 2–2" CONDUITS (3–NEUTRALS)

DUCTLINE DETAIL "D" 3–4" & 1–2" CONDUITS (2–NEUTRAL)

DUCTLINE DETAIL "E" 8–4" & 3–2" CONDUITS (4–NEUTRALS)

DUCTLINE DETAIL "F" 9–4" & 1–2" CONDUITS (3–NEUTRALS)

DUCTLINE DETAIL "G" 4–4" CONDUITS (4–NEUTRALS)

DUCTLINE DETAIL "H" 21–4" & 3–2" CONDUITS (7–NEUTRALS)

DUCTLINE DETAIL "I" 12–4" & 1–2" CONDUITS (3–NEUTRALS)

DUCTLINE DETAIL "J" 9–4" & 3–2" CONDUITS (4–NEUTRALS)

Riser installation Detail

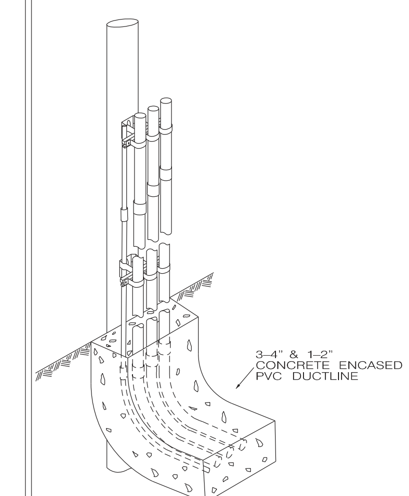

36" radius scheduled 80 pvc elbow and concrete up to ground level. Contractor shall make provisions to ensure that riser pole is not encased in concrete.

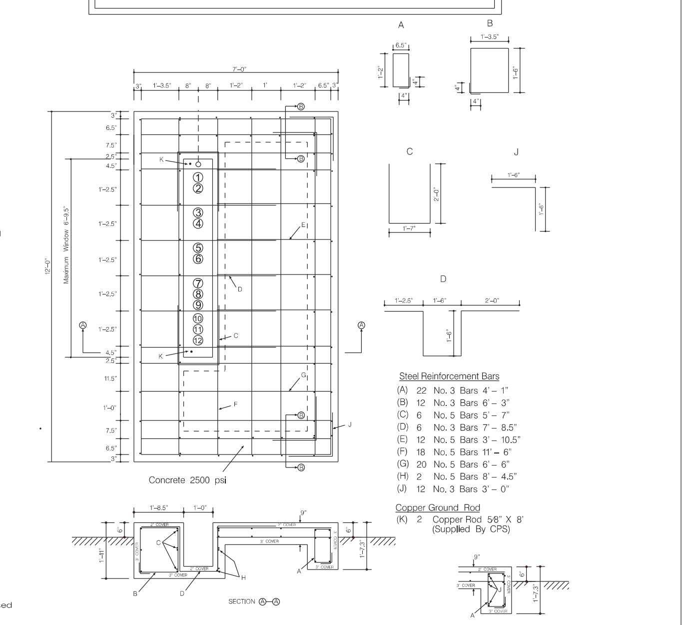

7' X 12' SWITCHGEAR SLAB DETAIL "A-A"
5-WAY 15 kV RATED
(12 – 4" & 1 – 2")

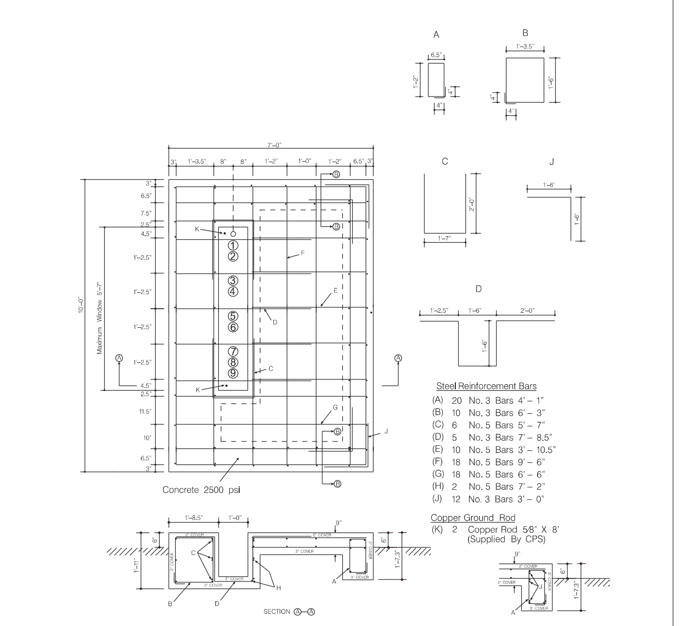

7' X 10' SWITCHGEAR SLAB DETAIL "B-B"
4-WAY 15 kV RATED
(9 – 4" & 1 – 2")

ADDENDUM NO. 3, Attachment No. 3