DISCLAIMER: The use of this standard is governed by the "Texas Engineering Practice Act". No warranty of any kind is made by TxDOT for any purpose whatsoever. TxDOT assumes no responsibility for the conversion of this standard to other formats or for incorrect results or damages resulting from its use.

FOUNDATION DESIGN TABLE

FDN TYPE	DRILLED SHAFT DIA	REINFORCING STEEL		EMBEDDED DRILLED SHAFT LENGTH-ft ④, ⑤, ⑥			ANCHOR BOLT DESIGN ①				FOUNDATION DESIGN LOAD ②		TYPICAL APPLICATION
		VERT BARS	SPIRAL & PITCH	TEXAS CONE PENETROMETER N blows/ft			ANCHOR BOLT DIA	Fy (ksi)	BOLT CIR DIA	ANCHOR TYPE	MOMENT K-ft	SHEAR Kips	
				10	15	40							
24-A	24"	4- #5	#2 at 12"	5.7	5.3	4.5	¾"	36	12 ¾"	1	10	1	Pedestal pole, pedestal mounted controller.
30-A	30"	8- #9	#3 at 6"	11.3	10.3	8.0	1 ½"	55	17"	2	87	3	Mast arm assembly. (see Selection Table)
36-A	36"	10- #9	#3 at 6"	13.2	12.0	9.4	1 ¾"	55	19"	2	131	5	Mast arm assembly. (see Selection Table) 30' strain pole with or without luminaire.
36-B	36"	12- #9	#3 at 6"	15.2	13.6	10.4	2"	55	21"	2	190	7	Mast arm assembly. (see Selection Table) Strain pole taller than 30' & strain pole with mast arm
42-A	42"	14- #9	#3 at 6"	17.4	15.6	11.9	2 ¼"	55	23"	2	271	9	Mast arm assembly. (see Selection Table)

NOTES:

① Anchor bolt design develops the foundation capacity given under Foundation Design Loads.

② Foundation Design Loads are the allowable moments and shears at the base of the structure.

③ Foundations may be listed separately or grouped according to similarity of location and type. Quantities are for the Contractor's information only.

④ Field Penetrometer readings at a depth of approximately 3 to 5 feet may be used to adjust shaft lengths.

⑤ If rock is encountered, the Drilled Shaft shall extend a minimum of two diameters into solid rock.

⑥ Decimal lengths in Design Table are to allow interpolation for other penetrometer values. Round to nearest foot for entry into Summary Table.

FOUNDATION SUMMARY TABLE ③

LOCATION IDENTIFICATION	AVG. N BLOW /ft.	FDN TYPE	NO. EA	DRILLED SHAFT LENGTH ⑥ (FEET)				
				24-A	30-A	36-A	36-B	42-A
TOTAL DRILLED SHAFT LENGTHS								

FOUNDATION SELECTION TABLE FOR STANDARD MAST ARM PLUS ILSN SUPPORT ASSEMBLIES (ft)

		FDN 30-A	FDN 36-A	FDN 36-B	FDN 42-A
80 MPH DESIGN WIND SPEED	MAX SINGLE ARM LENGTH	32'	48'		
	MAXIMUM DOUBLE ARM LENGTH COMBINATIONS	24' X 24'			
		28' X 28'			
		32' X 28'	32' X 32'		
			36' X 36'		
			40' X 36'		
			44' X 28'	44' X 36'	
100 MPH DESIGN WIND SPEED	MAX SINGLE ARM LENGTH		36'	44'	
	MAXIMUM DOUBLE ARM LENGTH COMBINATIONS		24' X 24'		
			28' X 28'		
			32' X 24'	32' X 32'	
				36' X 36'	
				40' x24'	40' X 36'
					44' x 36'

EXAMPLE:
1. For 80mph design wind speed, foundation 30-A can support up to a 32' arm with another arm up to 28'
2. For 100mph design wind speed, foundation 36-A can support a single 36' mast arm.

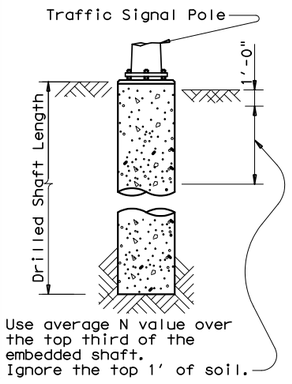

Use average N value over the top third of the embedded shaft. Ignore the top 1' of soil.

ANCHOR BOLT & TEMPLATE SIZES

BOLT DIA IN.	⑦ BOLT LENGTH	TOP THREAD	BOTTOM THREAD	BOLT CIRCLE	R2	R1
¾"	1'-6"	3"	—	12 ¾"	7 ⅛"	5 ⅝"
1 ½"	3'-4"	6"	4"	17"	10"	7"
1 ¾"	3'-10"	7"	4 ½"	19"	11 ¼"	7 ¾"
2"	4'-3"	8"	5"	21"	12 ½"	8 ½"
2 ¼"	4'-9"	9"	5 ½"	23"	13 ¾"	9 ¼"

⑦ Min dimensions given, longer bolts are acceptable.

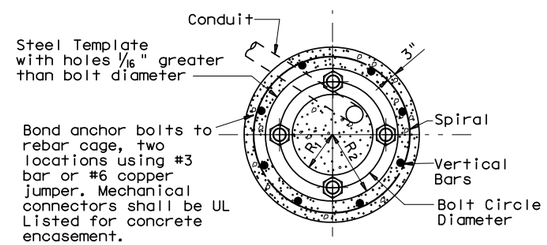

TOP VIEW

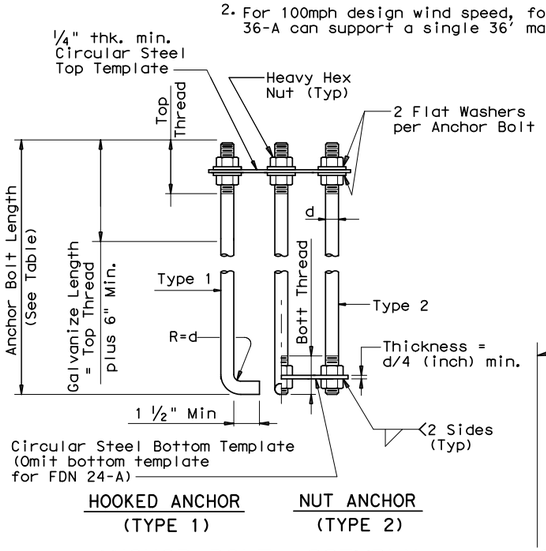

HOOKED ANCHOR (TYPE 1) | NUT ANCHOR (TYPE 2)

ANCHOR BOLT ASSEMBLY

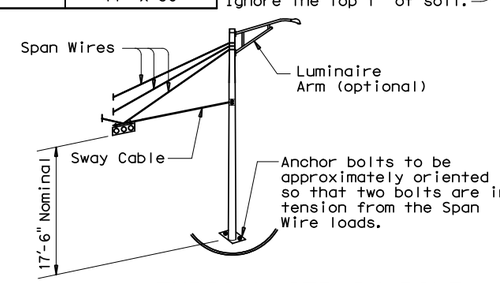

TYPICAL STRAIN POLE ASSEMBLY

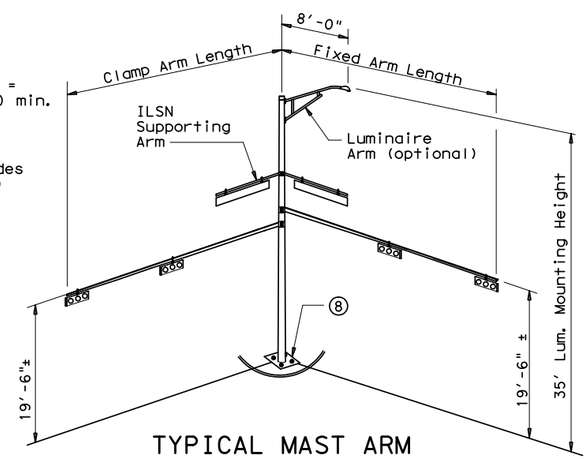

⑧ Orient anchor bolts orthogonal with the fixed arm direction to ensure that two bolts are in tension under dead load.

TYPICAL MAST ARM ASSEMBLY

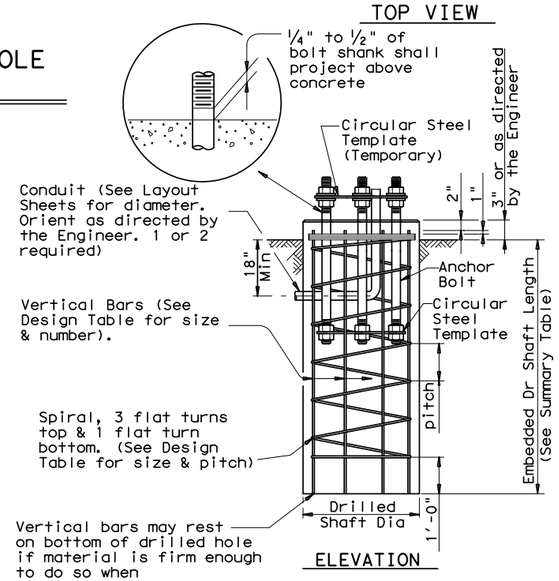

ELEVATION

FOUNDATION DETAILS

GENERAL NOTES:

Design conforms to 1994 AASHTO Standard Specifications for Structural Supports for Highway Signs, Luminaires and Traffic Signals and interim revisions thereto.

Reinforcing steel shall conform to Item 440, "Reinforcing Steel".

Concrete shall be Class "C".

Threads for anchor bolts and nuts shall be rolled or cut threads of 8UN series up to 2" in diameter or UNC series for all sizes. Bolts and nuts shall have Class 2A and 2B fit tolerances. Galvanized nuts shall be tapped after galvanizing.

Anchor bolts that are larger than 1" in diameter shall conform to "alloy steel" or "medium-strength mild steel" per Item 449, "Anchor Bolts". Anchor bolts that are 1" in diameter or less shall conform to ASTM A36. Galvanize a minimum of the top end thread length plus 6" for all anchor bolts unless otherwise noted. Exposed washers and exposed nuts shall be galvanized. All galvanizing shall be in accordance with Item 445, "Galvanizing".

Templates and embedded nuts need not be galvanized. Lubricate and tighten anchor bolts when erecting the structure in accordance with Item 449, "Anchor Bolts".

Texas Department of Transportation
Traffic Operations Division

TRAFFIC SIGNAL POLE FOUNDATION

TS-FD-12

© TxDOT August 1995

DN: MS	CK: JSY	DW: MAO/MMF	CK: JSY/TEB
CONT	SECT	JOB	HIGHWAY
DIST		COUNTY	SHEET NO.

REVISIONS
5-96
11-99
1-12

DATE:
FILE: