CITY OF SAN ANTONIO
CAPITAL IMPROVEMENTS MANAGEMENT SERVICES

ADDENDUM NO. 3

PROJECT NAME: GILBERT GARZA PARK IMPROVEMENTS

DATE: March 17, 2014

This addendum should be included in and be considered part of the plans and specifications for the name of the project. The contractor shall be required to sign an acknowledgement of the receipt of this addendum and submit with their bid.

CIMS PROJECT NO.: **40-00353**

Formal Invitation for Bid and Contract:

- Bid Opening date for GILBERT GARZA PARK IMPROVEMENTS PROJECT **has been extended to Tuesday, March 25, 2014.** Bids will be received in the Office of the City Clerk until 2:00 P.M. and then publicly opened and read aloud.

- Utilize and replace document entitled Form 010 Invitation for Bids (IFB) and Contract as referenced and posted on the City of San Antonio website.

Project Manual

1. Specification Section 05 5000, Metal Fabrications: ADD new section, attached.

Drawings

1. Sheet L3.03, Construction Details: ADD sheet to Bid Documents. These details are for the toilet enclosure that was moved from the Base Bid to Additive Alternate No. 6 (See Addendum No. 1).

REGISTERED LANDSCAPE ARCHITECT
KIMBERLEY M. WOLF
1005
STATE OF TEXAS

3·17·14

Note: Addenda Acknowledgement Form for Addendum 3 is attached herein. This form must be signed and submitted with the bid package.

CITY OF SAN ANTONIO
CAPITAL IMPROVEMENTS MANAGEMENT SERVICES

RECEIPT OF ADDENDUM NUMBER(S) **3** IS HEREBY ACKNOWLEDGED FOR PLANS AND

SPECIFICATIONS FOR CONSTRUCTION OF GILBERT GARZA **PARK IMPROVEMENTS IMPROVMENTS PROJECT 40-00353**

FOR WHICH BIDS WILL BE OPENED ON **TUESDAY, MARCH 25, 2014 AT 2:00 P.M.**

THIS ACKNOWLEDGEMENT MUST BE SIGNED AND RETURNED WITH THE BID PACKAGE.

Company Name: _____

Address: _____

City/State/Zip Code: _____

Date: _____

_____
Signature

_____
Print Name/Title

SECTION 05 50 00
METAL FABRICATIONS

PART 1 GENERAL

1.01 SECTION INCLUDES

A. Shop fabricated steel items, including:
   1. Toilet Enclosure.

1.02 RELATED REQUIREMENTS

A. Section 03 30 00 - Cast-in-Place Concrete

B. Section 09 90 00 - Painting and Coating: Paint finish.

1.03 REFERENCE STANDARDS

A. ASTM A36/A36M - Standard Specification for Carbon Structural Steel; 2008.

B. ASTM A53/A53M - Standard Specification for Pipe, Steel, Black and Hot-Dipped, Zinc-Coated, Welded and Seamless; 2010.

C. ASTM A123/A123M - Standard Specification for Zinc (Hot-Dip Galvanized) Coatings on Iron and Steel Products; 2009.

D. ASTM A153/A153M - Standard Specification for Zinc Coating (Hot-Dip) on Iron and Steel Hardware; 2009.

E. ASTM A283/A283M - Standard Specification for Low and Intermediate Tensile Strength Carbon Steel Plates; 2003 (Reapproved 2007).

F. ASTM A307 - Standard Specification for Carbon Steel Bolts and Studs, 60,000 PSI Tensile Strength; 2010.

G. ASTM A325 - Standard Specification for Structural Bolts, Steel, Heat Treated, 120/105 ksi Minimum Tensile Strength; 2009a.

H. ASTM A500/A500M - Standard Specification for Cold-Formed Welded and Seamless Carbon Steel Structural Tubing in Rounds and Shapes; 2010a.

I. AWS A2.4 - Standard Symbols for Welding, Brazing, and Nondestructive Examination; American Welding Society; 2007.

J. AWS D1.1/D1.1M - Structural Welding Code - Steel; American Welding Society; 2010.

K. SSPC-Paint 15 - Steel Joist Shop Primer; Society for Protective Coatings; 1999 (Ed. 2004).

L. SSPC-Paint 20 - Zinc-Rich Primers (Type I, "Inorganic," and Type II, "Organic"); Society for Protective Coatings; 2002 (Ed. 2004).

M. SSPC-SP 2 - Hand Tool Cleaning; Society for Protective Coatings; 1982 (Ed. 2004).

N. Texas Department of Transportation (TxDOT) Standard Specifications for Construction of Highways, Streets, and Bridges, Current Edition.

1.04 SUBMITTALS

A. See Section 01 30 00 - Administrative Requirements, for submittal procedures.

B. Shop Drawings: Indicate profiles, sizes, connection attachments, reinforcing, anchorage, size and type of fasteners, and accessories. Include erection drawings, elevations, and details where applicable.
   1. Indicate welded connections using standard AWS A2.4 welding symbols. Indicate net weld lengths.

PART 2 PRODUCTS

2.01 MATERIALS - STEEL

A. Steel Sections: ASTM A36/A36M.

B. Steel Tubing: ASTM A500, Grade B cold-formed structural tubing.

C. Plates: ASTM A283.

D. Pipe: ASTM A53/A53M, Grade B Schedule 40, black and hot-dip galvanized finish, as indicated.

E. Bolts, Nuts, and Washers: ASTM A307, galvanized to ASTM A153/A153M where connecting galvanized components.

F. Welding Materials: AWS D1.1/D1.1M; type required for materials being welded.

G. Shop and Touch-Up Primer: SSPC-Paint 15, complying with VOC limitations of authorities having jurisdiction.

H. Touch-Up Primer for Galvanized Surfaces: SSPC-Paint 20, Type I - Inorganic, complying with VOC limitations of authorities having jurisdiction.

2.02 FABRICATION

A. Fit and shop assemble items in largest practical sections, for delivery to site.

B. Fabricate items with joints tightly fitted and secured.

C. Continuously seal joined members by continuous welds unless specifically indicated otherwise on drawings.

D. Grind exposed joints flush and smooth with adjacent finish surface. Make exposed joints butt tight, flush, and hairline. Ease exposed edges to small uniform radius.

E. Exposed Mechanical Fastenings: Flush countersunk screws or bolts; unobtrusively located; consistent with design of component, except where specifically noted otherwise.

F. Supply components required for anchorage of fabrications. Fabricate anchors and related components of same material and finish as fabrication, except where specifically noted otherwise.
   1. Pre drill all holes for bolts and fasteners prior to application of galvanized finish.

2.03 FABRICATED ITEMS

A. Toilet Enclosure:
   1. Columns and collars: As detailed.
   2. Woven Wire Screen: As detailed.
   3. Miscellaneous Shapes: As detailed.

2.04 FINISHES - STEEL

A. Prime paint all steel items.
   1. Exception: Galvanize items as indicated.
   2. Exceptions: Galvanize items to be embedded in concrete or masonry.

B. Prepare surfaces to be primed in accordance with SSPC-SP2.

C. Clean surfaces of rust, scale, grease, and foreign matter prior to finishing.

D. Prime Painting: Two coats.

E. Galvanizing of Structural Steel Members: Galvanize after fabrication to ASTM A123/A123M requirements. Provide minimum 1.7 oz/sq ft galvanized coating.

F. Galvanizing of Non-structural Items: Galvanize after fabrication to ASTM A123/A123M requirements.

2.05 FABRICATION TOLERANCES

A. Squareness: 1/8 inch maximum difference in diagonal measurements.

B. Maximum Offset Between Faces: 1/16 inch.

C. Maximum Misalignment of Adjacent Members: 1/16 inch.

D. Maximum Bow: 1/8 inch in 96 inches.

E. Maximum Deviation From Plane: 1/16 inch in 48 inches.

PART 3 EXECUTION

3.01 EXAMINATION

A. Verify that field conditions are acceptable and are ready to receive work.

3.02 PREPARATION

A. Clean and strip primed steel items to bare metal where site welding is required.

B. Supply setting templates to the appropriate entities for steel items required to be cast into concrete.

3.03 INSTALLATION

A. Install items plumb and level, accurately fitted, free from distortion or defects.

B. Provide for erection loads, and for sufficient temporary bracing to maintain true alignment until completion of erection and installation of permanent attachments.

C. Field weld components indicated .

D. Perform field welding in accordance with AWS D1.1/D1.1M.
   1. Unless specifically called out as tack weld on drawings, all welds shall be continuous and ground smooth.

E. Obtain approval prior to site cutting or making adjustments not scheduled.

F. After erection, prime welds, abrasions, and surfaces not shop primed .

G. Repairs to galvanized items. TxDOT Item 445.

H. Portable Toilet enclosure: Install in concrete footings and lsab.

3.04 TOLERANCES

A. Maximum Variation From Plumb: 1/8 inch per story, non-cumulative.

B. Maximum Offset From True Alignment: 1/8 inch.

C. Maximum Out-of-Position: 1/8 inch.

END OF SECTION

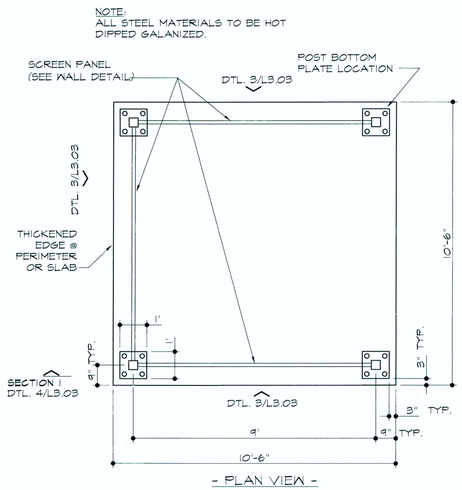

- PLAN VIEW -

1 L3.03 **TOILET ENCLOSURE - SINGLE UNIT**
3/8" = 1'-0"

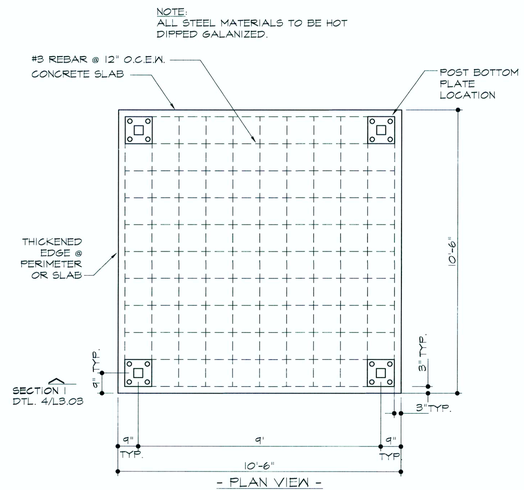

- PLAN VIEW -

2 L3.03 **TOILET ENCLOSURE - SINGLE UNIT SLAB**
3/8" = 1'-0"

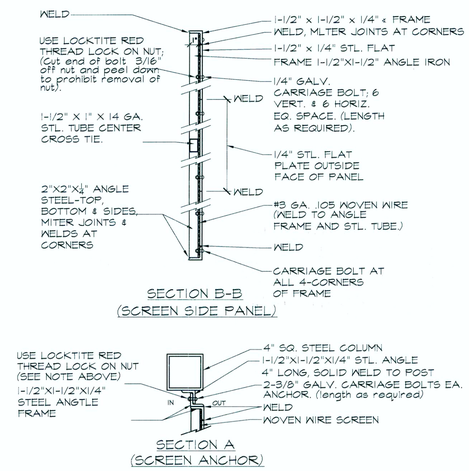

6 L3.03 **TOILET ENCLOSURE - SINGLE UNIT DETAILS**
SCALE: 1-1/2" = 1'-0"

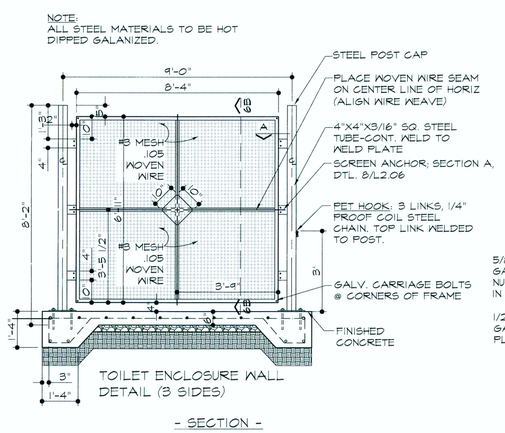

3 L3.03 **TOILET ENCLOSURE - SINGLE WALL**
3/8" = 1'-0"

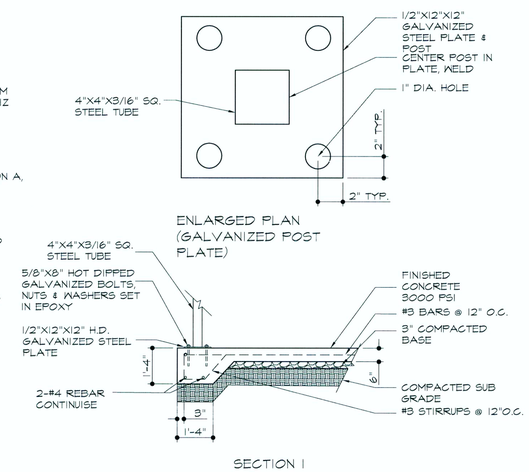

4 L3.03 **TOILET ENCLOSURE - SINGLE UNIT DETAILS**
SCALE: N/A

NOTE:
ALL STEEL MATERIALS TO BE HOT DIPPED GALANIZED.

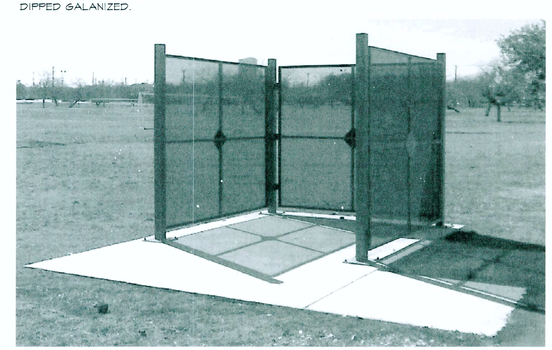

5 L3.03 **TOILET ENCLOSURE - DESIGN INTENT**
SCALE: N/A

ADDENDUM NO. 3

REGISTERED LANDSCAPE ARCHITECT
KIMBERLEY M. WOLF
1005
STATE OF TEXAS
3-17-14

The user of this file agrees to assume all responsibility for any modifications to or use of this drawing file that is inconsistent with the requirements of the Rules and Regulations of the Texas Board of Architectural Examiners. Neither the printed document nor the digital media may be altered or amended without the express written permission of the named professional.

RVK
Landscape Architects
Trinity Plaza II, Ninth Floor
745 East Mulberry
San Antonio, Texas 78212
Phone 210-733-3535 Fax 210-733-3549

PARKS & RECREATION
SAN ANTONIO

Date:	Revisions/Submissions
03-17-2014	Addendum No. 3; add sheet L3.03 to the documents set

CITY OF SAN ANTONIO
CAPITAL IMPROVEMENTS MANAGEMENT
SERVICES DEPARTMENT
VERTICAL PARKS DIVISION
MUNICIPAL PLAZA BUILDING 114 W. COMMERCE
P.O. BOX 839966 SAN ANTONIO, TEXAS 78283-3966
TEL. (210) 207-2879 FAX (210) 207-2720

GILBERT GARZA PARK
1450 MIRA VISTA
SAN ANTONIO, TEXAS 78228

CONSTRUCTION DETAILS

Designed By: LH, JC
Drawn By: JC, KB
Date: 01-23-2014
Project No.: 11056.L
Filename:

L-3.03