SPECIFICATIONS

FOR

FY 2014 – FY 2015 TASK ORDER CONTRACT FOR TRAFFIC SIGNAL EQUIPMENT MODIFICATIONS

CITY OF SAN ANTONIO

CITY MANAGER

Sheryl L. Sculley

DIRECTOR/CITY ENGINEER
TRANSPORTATION AND
CAPITAL IMPROVEMENTS
Mike Frisbie, P.E.

TRANSPORTATION AND CAPITAL IMPROVEMENTS
P.O. BOX 839966
SAN ANTONIO, TX. 78283-3966

STATE OF TEXAS
ELIDIA BANDA
82580
REGISTERED
PROFESSIONAL ENGINEER

Elidia Banda 1-17-14

JANUARY 2014 Set No.

FY 2014-2015 TASK ORDER CONTRACT FOR
TRAFFIC SIGNAL EQUIPMENT MODIFICATIONS
CITY OF SAN ANTONIO
TRANSPORTATION AND CAPITAL IMPROVEMENTS DEPARTMENT
JANUARY 2014

TABLE OF CONTENTS

Project Description

Governing Specifications

Special Provisions

Special Specifications

Project Description

Project Scope

The City of San Antonio is soliciting bids from qualified contractor(s) to install, replace or remove components of existing traffic signals located throughout the City of San Antonio. Unless otherwise noted elsewhere, the City of San Antonio will furnish equipment to be installed.

Services will include, but are not limited to, the installation, removal or replacement of vehicle detectors (VIVDS and/or radar), vehicle signal heads, pedestrian signal heads, pedestrian detectors (push buttons and/or audible pedestrian signals), LED signal lamp units, CCTV's, and traffic signal controller cabinets. Upon completion of each task order, fully operational systems will be required.

This contract is intended to provide installation assistance for various programs designed to upgrade specific equipment at existing traffic signals. This contract is not intended to be used to provide response maintenance assistance. Typical work orders may be as follows:

1. Changing out all LED lamp units for vehicle and pedestrian signal heads at several intersections along a corridor.
2. Install traffic vehicle detection devices, including cabling, at various locations citywide.
3. Install Audible Pedestrian Signals (APS), including cabling, at various locations citywide.

The contractor will be required to install and make fully operational equipment furnished by the City. Any ancillary items needed by the contractor for a fully functional installation are the responsibility of the Contractor and shall be subsidiary to the applicable bid item.

These services are required by the Transportation & Capital Improvements Department Traffic Management Operations Section.

Project Duration and Amount

This contract is a Task Order contract and task orders will be provided based on requested projects and available funding. The contract shall be terminated 365 calendar days after the first task order's notice to proceed. The construction time for each task order will be determined by the Project Manager.

Important Notes

1. All work shall follow the latest edition of the "City of San Antonio Standard Specifications for Construction" published by the City of San Antonio and any Special Provisions for this contract.

2. No direct payment will be made for the following items all associated costs shall be subsidiary to the various applicable items:

    A. Insurance and Bond
    B. Item 100 - Mobilization
    C. Item 101 - Preparing of Right of Way
    D. Item 530 - Barricades, Signs and Traffic Handling
    E. Item 540 - Storm Water Pollution Prevention Plans (SW3P)

3. Unit prices established shall remain valid throughout the duration of the contract.

4. **The quantities shown are estimated quantities used for budgetary purposes only. There is no minimum guarantee on the amount of work shown on the proposal with the awarding of this contract.**

5. The projects will be assigned as they become available through the individual task orders. Specific project information including project limits, work required time allotted for task order and estimated quantities will be provided with each Task Order. Task Orders will be coordinated with Contractor prior to issuance.

6. Workers exposed to traffic will be attired in bright, highly visible clothing at all times and all work zone safety rules shall be adhered to.

7. **The City of San Antonio expects "priority" service regarding the scheduling, timely completion and quality assurance of all work being completed under this contract.**

8. Task Orders will be coordinated with Contractor prior to issuance; however Contractor is expected to be sufficiently staffed to complete up to 5 task orders, if needed, at one time.

9. The Contractor shall continuously execute work until all work required by each Task Order is complete.

10. Before beginning work, contractor shall provide a written schedule of work for each Task Order. Work for each task order shall be scheduled to comply with the time allowance defined in each Task Order. Any deviation from this

schedule will require approval from the City of San Antonio's Project Manager prior to implementation of the schedule change.

11. Final adjustment of any equipment installed, as required by the Engineer, shall be done by the Contractor and shall be subsidiary to the applicable bid items.

12. All traffic signal equipment installed shall maintain a minimum clearance of 3' radius from neutral overhead electrical lines and 10' radius from primary overhead electrical lines. Additional clearance requirements shall be as directed by the electrical utility company.

13. Any damage done by the contractor while performing the work under this contract will be corrected by the contractor at his expense. The decision to repair or replace items damaged will be at the Engineer's discretion.

14. The contractor shall present to the City of San Antonio a QA/QC plan that will be implemented to ensure all work performed under this contract is of the highest quality. Quality work is expected at all times. Work that does not meet the specifications and is deemed non-quality by the City will be re-done at the Contractor's expense.

SPECIAL PROVISIONS

All work shall conform to the 2008 Edition of the "Standard Specifications for Construction" published by the City of San Antonio and these Special Provisions.

Item 100: Mobilization

Mobilization will not be paid for directly, but will be subsidiary to the various bid items.

Item 103: Remove Concrete

Breaking up, removal and disposal of existing concrete associated with the modification of traffic signal equipment shall be executed in accordance with this item.

When only a portion of the existing concrete is to be removed, care shall be exercised to avoid damage to the portion that is to remain in place. The existing concrete shall be cut to neat lines shown on the plans or as established by the Engineer, by sawing with an appropriate type circular concrete saw to a minimum depth of ½-inch. Any existing concrete which is damaged or destroyed beyond the neat lines so established shall be replaced at the Contractor's expense. Where reinforcement is encountered in the removed portions of the concrete, a minimum of 1-foot shall be cleaned of all old concrete and left in place to tie into the new concrete construction.

Item 101: Preparing Right – of – Way

The contractor will be responsible for obtaining all permits required to complete the assigned task orders. This item will not be paid directly, but will be subsidiary to the various bid items.

Item 502: Concrete Sidewalks

Replacement of incidental concrete required by traffic signal equipment modification activities shall be in accordance with this item except for measurement. Replacement of concrete will be measured by the square foot of surface area regardless of depth and reinforcing steel needed to match existing conditions. Concrete to be replaced or repaired shall be as indicated on the plans or as directed by the Engineer.

Item 530: Barricades, Signs & Traffic Handling

The contractor will be responsible for furnishing and installing all signs, barricades, and other incidentals necessary for proper traffic control, in accordance with Part VI of the Texas MUTCD, the attached Work Zone Standards and as directed by the engineer. All warning signs shall be factory made and in satisfactory condition.

In the event of non-compliance with the TMUTCD, the ROW user shall be notified in writing on the violation. In the event of continued non-compliance, the Director of Public Works may revoke the Permit, in addition to any other remedies available to the City.

Traffic control setup and maintenance will not be paid for directly, but will be subsidiary to the various bid items.

Lane closures will require prior approval and shall be coordinated with the City's Row of Way Management Office.

Normal working hours will be 9 a.m. to 4 p.m., Monday through Friday. When directed, high traffic volumes in urban areas will require work during non-peak hours, weekends, and nights. No work to be performed on National holidays or State observed holidays unless otherwise shown on plans or approved.

Item 531: Signs

Signs to be installed will be provided by the City of San Antonio. The City of San Antonio will provide signs and posts for task orders requiring installation of ground mounted signs. The contractor shall provide the necessary hardware for mounting on the signal pole, post, mast arm, span wire or other traffic signal component as directed. All mounting hardware necessary for a complete sign installation will not be paid for directly, but will be subsidiary to the various items.

Item 540: Temporary Erosion, Sedimentation, and Water Pollution Prevention and Control

Cost associated with this item, if necessary, will not be paid for directly, but will be subsidiary to the various bid items.

Item 600: Traffic Signal General Conditions

Contractor shall refer to this item accordingly for additional information. All work shall comply with the City of San Antonio Right of Way Ordinance.

Contractor will pick up City supplied materials at and deliver salvageable materials to the City of San Antonio Traffic Signal Shop at 223 S. Cherry St. Contractor will call Ernest de la Rosa at 207-3966 one week prior to beginning work to coordinate equipment pick-up.

Contractor will return to the City any equipment removed and deemed salvageable by the Engineer. At his expense and with no additional payment, the contractor will appropriately dispose of any items removed and deemed not to be salvageable by the Engineer.

Item 615: Traffic Signal Controller Cabinet

For task orders requiring the replacement of traffic signal controller cabinets, the City of San Antonio will furnish cabinets to be installed by the contractor. The contractor shall be responsible for removing existing traffic signal controller cabinets and installing City of San Antonioissued cabinets on existing foundation. The contractor shall furnish all additional materials and equipment necessary to ensure a complete installation.

The Contractor shall ensure equipment inside the cabinet and all wiring is not damaged during the cabinet replacement. The contractor shall demonstrate to the Engineer's satisfaction that field wiring and the equipment has been properly reinstalled in the new cabinet. City of San Antonioforces will connect the field wiring to the controller and set up and turn on the controller.

Item 624: Ground Boxes

Removal of ground boxes will be measured as each ground box removed. Price is full compensation for removal of ground box, apron, if any, and any other items associated with the existing ground box installation as directed by the Engineer. If existing ground box is not to be replaced, payment will be full compensation for removing the ground box, apron and all equipment, labor, tools and incidentals required to blend location with the existing finished ground.

For task orders that include installation of ground box(es), the City of San Antonio will furnish the ground box(es) to be installed by the Contractor.

Item 625: Zinc-Coated Steel Wire Strand

For task orders requiring the installation of guy wires with anchors, 3/8" messenger cable shall be used. Installation of a standard guy or sidewalk guy shall be as indicated on the plans or as directed by the Engineer and in accordance with TxDOT San Antonio District Standard FBTP(1)-06. Measurement will be for each guy wire installation complete in place including anchors, cable, guards and all incidentals.

Task orders requiring the installation of traffic signal span wire shall be in accordance with this item except for measurement and payment. Span wire installations shall be measured and paid by the linear foot of span wire installed. All incidentals required for a complete installation shall be subsidiary to this item.

Item 628: Electrical Service

For task orders requiring the installation of an electrical service disconnect, measurement will be for each fully functioning electrical service disconnect complete in place. Payment is full

compensation for all materials, including but not limited to risers and conduits, fees and incidental costs in accordance with the payment clause of this item.

Item 655: Controller Foundation and Pedestal Posts

Controller foundations shall be in accordance with the latest City of San Antonio Traffic Signal Controller Foundation Standard Detail. The City of San Antonio will furnish ground boxes required by the plans or standard detail. Contractor shall furnish and install ground rods as shown on the plans or standard detail. The price for this item shall be full compensation for a complete foundation in place including installation of controller foundation ground boxes and ground rods.

Task orders for installation of ground rods will be measured as each ground rod furnished and installed by the contractor complete in place. Contractor shall furnish 5/8 inch X 8' copper weld ground rods installed in the traffic signal controller foundation ground box or as directed by the Engineer. Acceptance of ground rod installation will depend on verification of depth of installation by the City of San Antoniorepresentative.

Item 682: Vehicle and Pedestrian Signal Heads

For task orders requiring the installation of vehicle signal heads, the City of San Antonio will furnish vehicle signal heads with LED lamp units, backplates and mounting assemblies.

For task orders requiring the installation of pedestrian signal heads, the City of San Antonio will furnish pedestrian signal heads with LED lamp units and mounting arms.

For task orders requiring the replacement of vehicle signal head lamp units, the Contractor will remove existing lamp units and install LED lamp units furnished by the City of San Antonio. Measurement for replacement of lamp units will be for each lamp unit replaced. The contractor can expect task orders for replacement of lamp units to be for replacement of all vehicle signal head lamp units at each location assigned.

Some vehicle signal heads may have incandescent bulbs. In these instances, the contractor shall remove all the components required by the incandescent bulb and replace with the appropriate LED lamp unit provided at no additional cost to the City of San Antonio.

Contractor shall furnish any additional materials needed to ensure a complete, fully functional installation.

Item 683: LED Countdown Pedestrian Signal Module

For task orders requiring the replacement of pedestrian signal indication lamps, the Contractor will remove existing lamp units and install LED countdown pedestrian signal modules furnished by the City of San Antonio. Measurement for replacement of lamp units will be for each lamp unit replaced. The contractor can expect task orders for replacement of lamp units to be for replacement of all pedestrian signal head lamp units at each location assigned.

Some pedestrian signal heads may not have the LED countdown pedestrian signal modules. In these instances, the contractor shall remove all the components required by the existing pedestrian signal indication lamp and replace with the appropriate LED lamp unit provided at no additional cost to the City of San Antonio.

Contractor shall furnish any additional materials needed to ensure a complete, fully functional installation.

Item 684: Traffic Signal Cables

All proposed signal cable shall be #14 a.w.g. solid copper.

Item 688: Pedestrian Detectors and Vehicle Loop Detectors

For task orders requiring the installation of pedestrian detectors (push buttons), the City of San Antonio will furnish pedestrian push button/sign assemblies.

For task orders requiring the installation of audible pedestrian signals, the City of San Antonio will furnish the APS unit to be installed.

For task orders requiring the replacement of existing pedestrian detectors, the Contractor will remove existing equipment and replace with ADA complaint pedestrian push button/sign assemblies furnished by the City of San Antonio.

The contractor shall furnish all additional materials and equipment necessary to ensure a complete, fully functional installation.

Item 693: Internally Lighted Street Name Sign Assemblies

For task orders requiring the installation of internally lighted street name signs (ILSN), the City will furnish the ILSNs, legend, and mounting hardware.

The contractor shall furnish all additional materials and equipment necessary to ensure a complete installation.

Item 694: Video Imaging Vehicle Detection System

For task orders requiring the installation of video imaging vehicle detection systems (VIVDS), the City of San Antonio will furnish the VIVDS camera assemblies, mounting hardware, and cable. The contractor shall focus and zoom the cameras as directed by the Engineer to ensure a complete, fully functional VIVDS installation.

The camera assemblies shall be mounted above the roadway on the mast arms and/or luminaire arms, as directed by the Engineer. Camera assembly height shall be a minimum of 25 feet above the roadway or in accordance with manufacturer recommendation to obtain optimum detection, as determined by the Engineer.

For installations requiring a luminaire arm, the City of San Antonio will furnish the luminaire arm. The contractor shall furnish any ancillary items needed to mount the luminaire arms to the wood or steel strain poles.

Payment of processor unit installations will be full compensation for the installation of all items required for a fully operational system including but not limited to installation of power distribution panel, surge arrestor and related wiring.

The contractor shall furnish all additional materials and equipment necessary to ensure a complete, fully functional installation.

Item 696: Radar Vehicle Detection Devices (RVDD)

For task orders requiring the installation of Radar Vehicle Detection Devices (RVDD), including: Radar Advance Detection Devices (RADD) and/or Radar Presence Detection Devices (RPDD), the City of San Antonio will furnish the radar sensor, power and surge protection panel or module, mounting hardware and communication and power cable(s).

The contractor can expect installation of these devices to be on existing poles. The contractor shall make field adjustments as necessary and as directed by the Engineer to ensure a fully functional RVDD installation.

The contractor shall furnish all additional materials and equipment necessary to ensure a complete, fully installation.

Item 697: Closed Circuit Television (CCTV) Cameras

For task orders requiring the installation of Closed Circuit Television (CCTV), the City will furnish the camera, mounting hardware and communication and power cable(s).

The contractor can expect installation of these devices to be on existing poles. The contractor shall make field adjustments as necessary and as directed by the Engineer to ensure a fully functional CCTV camera installation.

The contractor shall furnish all additional materials and equipment necessary to ensure a complete installation.

SPECIAL SPECIFICATIONS

ITEM 696

RADAR VEHICLE DETECTION DEVICES (RVDD)

696.1. DESCRIPTION: *Furnish and install Radar Vehicle Detection Devices (RVDD), including: Radar Advance Detection Devices (RADD) and/or Radar Presence Detection Devices (RPDD) to detect vehicles on a roadway via processing of radar electromagnetic waves and provides detector outputs to a traffic signal controller or similar device.*

696.2. DEFINITIONS

A. **RADAR:** Radio detection and ranging. High frequency electromagnetic energy waves used to detect, identify, and determine the range, direction, and/or speed of an object such as a motor vehicle.

B. **Radar Vehicle Detection Device (RVDD):** Device that emits electromagnetic waves and senses return waves from passing and/or approaching vehicles. The RVDD shall be spatially monostatic; the transmitter and receiver shall be located on the same sensor device.

C. **Radar Advance Detection Device (RADD):** Device that accurately and continuously detects, tracks, and identifies speed of approaching vehicles simultaneously to an intersection in the selected direction of travel. The RADD is capable of detection as described in section 696.3.A. The RADD shall maintain detection of a vehicle moving within 100 ft. to 500 ft. from the device as programmed by the user.

D. **Radar Presence Detection Device (RPDD):** Device that accurately and continuously detects and tracks approaching vehicles simultaneously to an intersection in the selected direction of travel. The RPDD is capable of true presence detection as described in section 696.3.B. The RPDD shall maintain detection of a vehicle moving or stopped within a programmed detection zone set up by the user.

E. **Interface Module:** Device that interfaces with the cabinet detector rack allowing for contact closure to occur on a selected detector channel.

F. **Communications Link:** The communications connection between the RVDD processor unit and a local area network (LAN) or laptop computer.

G. **Detection Accuracy:** The measure of the basic operation of a detection system (shows detection when a vehicle is in the detection zone and shows no detection when there is not a vehicle in the detection zone).

H. **Passage Detection:** The ability of a vehicle detector to detect the passage of a vehicle moving through the zone of detection and to ignore the presence of a vehicle stopped within the zone of detection.

I. **Presence Detection:** The ability of a vehicle detector to sense that a vehicle, whether moving or stopped, has appeared in its zone of detection.

J. **Delay Timing:** When selected, applies delayed contact closure to the associated detector channel input. When a vehicle is detected by the RVDS, the delay timing must time out before contact closure is removed from the associated detector channel.

K. **Extension Timing:** When selected, applies additional contact closure to the associated detector channel input. When a vehicle is no longer detected within a detection zone, extension timing must time out before contact closure is removed from the associated detector channel.

696.3. FUNCTIONAL CAPABILITIES

A. Radar Advance Detection Device (RADD) Capabilities and Requirements

1. The RADD shall provide passage detection and contact closure to the interface module for vehicles approaching the intersection (the unit).

2. The RADD shall provide vehicle detection, tracking, and speed of moving vehicles approaching an intersection at a range of 100 feet to 500 feet from the radar sensor.

3. The RADD system software shall be capable of creating multiple detection zones within the detection range and applying conditional logic to the detection zones, allowing contact closure to occur only when logic conditions are achieved by the RADD. The user shall be able to apply logic gating such as: "and", "or" to a detection zone from the software GUI provided with the system. Conditional logic programming will allow the user to control when contact closure occurs to the detector rack interface module.

4. The RADD system software shall be capable of minimum and maximum speed settings to create a desired speed range for contact closure to the detector channel. Vehicles detected within the minimum and maximum speed settings will apply contact closure to the assigned detector channel input.

5. Detection accuracy will be determined by the detection of any moving vehicle or cluster of vehicles within a defined detection zone and within the minimum and maximum speed parameters programmed for the detection zone. With four (4) detection zones programmed, each zone 100 feet in length, a minimum of 95% detection accuracy shall be required for each zone. Detection zones will be set up between 100 feet and 500 feet. Conditional logic for each zone shall be set up in the "or" gate position allowing for contact closure to occur when vehicle speed conditions are met in the detection zone.

6. The RADD shall be capable of delay timing as defined in 696.2.J of this specification. As a minimum the user shall be able to program and select extension timing from 0-25 seconds in one/tenth (0.1) second increments from the GUI provided with the RVDS system.

7. The RADD shall be capable of extension timing as defined in 696.2.K of this specification. As a minimum the user shall be able to program and select extension timing from 0-25 seconds in one/tenth (0.1) second increments from the GUI provided with the RADD system.

8. The RADD shall be capable of adjusting the extension time automatically based on speed of a moving vehicle.

B. Radar Presence Detection Device (RPDD) Functional Capabilities and Requirements

1. The RPDD shall provide presence detection and contact closure to the interface module for vehicles approaching an intersection. Presence detection shall operate as defined in 696.2.I of this specification.

2. The RPDD shall, as a minimum detect vehicles within a 100 feet, 90 degree cone of detection from the sensor. Stop bar radar units shall be able to detect vehicles in 10 lanes of detection. The number of lanes used and detection zones shall be set up and selected from the GUI.

3. The RPDD shall be able to assign up to 4 detector outputs per unit and capable of using 2 or 4 channel interface modules to the detector rack.

4. The RPDD shall be able to distinguish and omit wrong way traffic from activating an assigned detector output.

5. The RPDD shall as a minimum, maintain a detection accuracy of 95% for each detection zone set-up on the GUI.

696.4. MATERIALS: Provide components necessary for RVDD installation. A RVDD shall consist of the following components: Radar sensor (1), detector rack interface module (1), power and surge protection panel or module (1), and all associated equipment required to set up and operate in a field environment including software, serial and Ethernet communications ports, cabling, electrical connectors, and mounting hardware.

A. RVDD Interface Module

1. The RVDD interface module must comply and operate with NEMA TS-2 Type 1 detector rack or Type 170/2070 input file.

2. The RADD shall be capable of 16 contact closure inputs to the detector rack. The user shall be able to assign each contact closure to an associated detector channel. The contact closure shall occur through the interface modules or controller module plugged into the rack.

3. All components of the RVDD housed in the controller cabinet shall be rated to operate in a temperature range from -34°C to +74°C (-30°F to +165°F) at 0 percent to 95 percent relative humidity, non-condensing.

4. The RVDD shall provide a "fail safe" operation that triggers when communication between the radar vehicle sensor and the interface module is broken. Contact closure will occur on all programmed detector channels associated with the interface module when the fail safe is triggered and will remain in this state until communication is reestablished between the interface module and the radar vehicle sensor.

5. The RVDD shall be capable of either "pulse mode" or "presence mode" operation. In the pulse mode, when a vehicle is detected and conditional logic is satisfied, contact closure will occur for approximately 125 ms. In the presence mode, contact closure will occur for as long as a vehicle is detected and conditional logic programming is satisfied.

B. RVDD Sensor

1. The RVDD shall be able to operate in all types of weather conditions including: rain, snow, sleet, ice, fog, and wind blown dust. The RVDD shall be able to operate normally and with no degraded performance when the radar vehicle sensor is encased in a 1/2 inch ice.

2. The RVDD shall be rated to operate in a temperature range from -34°C to 60°C (-30°F to 140°F) at 0 percent to 95 percent relative humidity.

3. The RVDD shall comply with all applicable Federal Communications Commission (FCC) requirements. The manufacturer will provide documentation of compliance with FCC specifications. Each RVDD will be FCC certified under CFR 47, Part 15, Section 15.245 as a field disturbance sensor or Section 15.249 as an intentional radiator. This certification will be displayed on an external label on each device according to the rules set forth by the FCC.

4. The RVDD shall maintain frequency stability without the use of manual tuning elements by the user.

C. Power and Surge Protection

1. Lightening and surge protection will be provided for power connections and communications links to the RVDD meeting or exceeding EN 61000-4-5 class specifications.

D. Software and Communication Requirements

1. The RVDD system software shall utilize a GUI that runs in a Microsoft Windows Mobile and Microsoft Windows XP environment or newer Microsoft operating system. The GUI shall graphically illustrate vehicle movement and directionality when detection is achieved by the RVDD. The software shall be capable of auto configuration upon set up of the RVDD.

2. Programmed parameters from the GUI to the sensor shall be stored in non-volatile memory devices such as Flash RAM or EEPROM within the sensor. The RVDD shall not rely on batter backup or the use of a super capacitor to retain memory.

3. The RVDD shall provide a RS232 serial communications link allowing the user to interface with a laptop computer and operate the GUI. The RS232 serial port shall be full duplex and will support true RTS/CTS hardware handshaking for interfacing to various communications devices.

4. The RVDD shall provide an Ethernet communications link allowing the user to interface the system and operate the GUI via a LAN and using TCP/IP protocol.

5. The RVDD firmware shall be upgradeable by external, local, or remote download via serial or Ethernet ports.

6. The serial and Ethernet communications ports as a minimum will support the following baud rates: 9600, 19200, 38400, 57600, and 115200. The user shall be able to select the desired baud rate from the GUI.

7. The operator shall be able to save configurations settings to a file or reload the configurations settings to the RVDD from a saved file using the GUI.

8. The RPDD software shall allow for a virtual connection option so that the software can be used without connecting to an actual sensor.

E. Cabling: The cable end connector shall meet the MIL-C-26482 specification and shall be designed to interface with the appropriate MIL-C-26482 connector. The connector back shell shall be an environmentally sealed shell that offers excellent immersion capability. All conductors that interface with the connector shall be encased in a single jacket and the outer diameter of this jacket shall be within the back shell's cable O.D. range to ensure proper weather sealing. The back shell shall have a strain relief with enough strength to support the cable slack under extreme weather conditions. The cable shall conform to the following specifications:

1. Radar Advance Detection Device (RADD) Cabling

a. Shielded, twisted pairs with a drain wire

b. Nominal Capacitance Conductor to Conductor @ 1 KHz <= 26 pF/Ft

c. Nominal Conductor DC resistance at 20°C (68°F) <= 15 ohms/1000 Ft

d. Single continuous run with no splices allowed.

- If communication is conducted over the RS-485 bus, the communication cable can be terminated only at the two farthest ends of the cable and the operational baud rate and cable lengths shall not exceed the following limits:

Baud Rate*	Cable Length
115.2 Kbps	300 ft
57.6 Kbps	600 ft
38.4 Kbps	800 ft
19.2 Kbps	1000 ft
9.6 Kbps	2000 ft

**Note: These represent Maximum data rates. The data rate used should be the minimum data rate required for operation.*

e. RVDS supplied shall use 24 VDC, the power cable shall meet the following specifications:

- Two shielded, twisted pairs with two drain wires connected in parallel
- Nominal capacitance conductor to conductor @ 1 KHz <= 26 pF/Ft
- Nominal conductor DC resistance @ 20°C (68°F) <= 15 ohms/1000

- The cable length shall not exceed 600 ft.

f. If a cable length of 600 ft to 2,000 ft is required, the power cable shall meet the following specifications:

- 10 AWG conductor size/gauge
- Two conductor count
- Stranded Cable Type
- Bare Copper Material
- 600 Volt Range
- 90°C Temperature Rating
- PVC/Nylon insulation material
- PVC jacketing material
- 40 Amps per conductor

g. Both communication and power conductors may be bundled together in the same cable as long as the above-mentioned conditions are met.

2. Radar Presence Detection Device (RPDD) Cabling

a. The RS-485 conductors shall be a twisted pair.

b. The RS-485 conductors shall have nominal capacitance conductor to conductor of less than 71 pF/Ft at 1 KHz.

c. The RS-485 conductors shall have nominal conductor DC resistance of less than 16.5 ohms/ (304.8 m) at 20°C (68°F).

d. The power conductors shall be one twisted pair with nominal conductor DC resistance of less than 11.5 ohms/ (304.8 m) at 20°C (68°F).

e. Each wire bundle or the entire cable shall be shielded with an aluminum/Mylar shield with a drain wire.

f. The cable O.D. shall not exceed 0.4 inches.

g. The cable length shall not exceed 2,000 ft (609.6 m) for the operational baud rate of RS-485 communications (9.6 Kbps).

h. The RVDS shall use 24 VDC and the cable length shall not exceed 500 ft (182.9 m).

i. Both communication and power conductors can be bundled together in the same cable as long as the above-mentioned conditions are met.

696.5. EQUIPMENT: Provide the machinery, tools, and equipment necessary for proper prosecution of the work. All machinery, tools, and equipment used shall be maintained in a satisfactory and workmanlike manner.

696.6. CONSTRUCTION: Install RVDD in accordance with the details shown on the plans and the requirements of this item

A. Manufacturing and Testing

1. The internal electronics of the RVDD shall utilize automation for the surface mount assembly. The RPDD shall comply with the requirements set forth in IPC-A-610C Class 2 and the RADD with the requirements in IPC-A-610C Class 3, Acceptability of Electronic Assemblies.

2. The RVDD shall undergo a rigorous sequence of operational testing to ensure product functionality and reliability. Testing shall include the following:

   a. Functionality testing of all internal sub-assemblies

   b. Unit level burn-in testing of duration 48 hours or greater

   c. Final unit functionality testing prior to shipment.

B. Installation and Training

1. When requested by COSA personnel or purchasing agency, the supplier of the RVDD shall supervise the installation and testing of the radar equipment.

2. If requested by COSA personnel or purchasing agency, up to two days of training shall be provided to personnel of COSA in the operation, setup, and maintenance of the RVDD. Instruction and materials shall be provided for a maximum of 20 persons and shall be conducted at a location selected by COSA. COSA or purchasing agency shall be responsible for the cost of training.

3. Instruction personnel are required to be certified by the equipment manufacturer. The User's Guide is not an adequate substitute for practical, classroom training and formal certification by an approved agency.

4. Formal levels of factory authorized training are required for installers, contractors, and system operators. All training must be certified by the manufacturer.

C. Warranty, Maintenance, and Support

1. The RVDD shall be warranted to be free of defects in material and workmanship for a period of 5 years from date of shipment from the supplier's facility. During the warranty period, the supplier shall repair with new or refurbished materials, or replace at no charge, any product containing a warranty defect or fails to operate properly after installation provided the product is returned FOB to the supplier's factory or authorized repair site. Product repair or replaced under warranty by the supplier will be returned with transportation prepaid. This warranty does not apply to products damaged by accident, improper operation, abuse, serviced by unauthorized personnel or unauthorized modification.

2. If a RVDD fails with no visible or physical damage to any electronic/electrical component of the system or its wiring, then the unit is considered to have failed under normal operating conditions. A blown fuse or surge protection device failure shall be considered to have failed under normal operating conditions. Acts-of-God will not be accepted as excusable unit failures of the RVDD system.

3. Repair or full replacement will be required if a RVDD fails to operate as specified under normal operating conditions. Repaired or replaced components of the RVDD will be provided at no cost to COSA. The replaced or repaired units will inherit the remainder of the failed unit's warranty.

4. During the warranty period, technical support shall be available from the supplier via telephone within 4 hours of the time a call is made by a user, and this support shall be available from factory certified personnel or factory certified installers.

5. Ongoing software support by the supplier shall include firmware updates for the RVDD processor unit and external software needed to set up and operate the RVDD system. These updates shall be provided free of charge during the warranty period. The update of the RVDD software shall be tested and approved by COSA before installation.

6. The supplier shall maintain a program for technical support and software updates following expiration of the warranty period. This program shall be made available to COSA in the form of a separate agreement for continuing support.

7. The supplier shall maintain an adequate inventory of parts to support maintenance and repair of the radar system.

696.7. MEASUREMENT: This item will be measured as each RADD or RPDD installed, tested, and made operational including the radar sensor, detector rack interface module, processor units, power and surge protection panel or module, software, serial and Ethernet communication ports, electrical connectors and mounting hardware.

The RVDD communication and power cable(s) will be measured by the linear foot of the cable type furnished (RADD or RPDD)

696.8. PAYMENT: The work performed and materials furnished in accordance with this item and measured as provided under "Measurement" will be paid for at the unit price bid for each item listed in Section 696.9, "Bid Items". These prices are full compensation for furnishing, placing, and testing all materials and equipment, and for all tools, labor, equipment, hardware, operational software packages, supplies, support, personnel training, shop drawings, documentation, and incidentals. A power cable meeting the specifications outlined in Section 696.4 "Materials" shall be included with communication cable and is considered subsidiary to the price of the communication cables.

These prices also include any and all interfaces required for the field and remote communications links along with any associated peripheral equipment, including cables; all associated mounting hardware and associated field equipment; required for a complete and fully functional RVDD system.

696.9. BID ITEMS:

Item 696.01 - Radar Advance Detection Device (RADD) – per each

Item 696.02 - Radar Presence Detection Device (RPDD) – per each

Item 696.03 - Radar Advance Detection Device (RADD) Communication and Power Cable – per linear foot

Item 696.04 - Radar Presence Detection Device (RPDD) Communication and Power Cable – per linear foot

Item 696.12 - Install Radar Detection Device – per each

Item 696.14 - Install Radar Communications Cable – per linear foot

SPECIAL SPECIFICATION

ITEM 697

CCTV Field Equipment

1. **Description.** Provide, install, and make fully operational with the City of San Antonio Traffic Management System, Closed Circuit Television (CCTV) Field Equipment in designated field locations and traffic signal cabinets as shown on the plans, as detailed in the Special Specifications and as directed by the Engineer.

2. **Materials.**

   A. **General Requirements.** Provide, assemble, fabricate and install materials that are new, corrosion resistant and in strict accordance with the details shown on the plans and in the specifications.

      1. Provide CCTV Field Equipment that is fully compatible with City of San Antonio Traffic Signal Communications System that includes a switch in the traffic signal controller cabinet. Software compatible with City's computers will be provided that allows camera control from a desktop computer through the City's IP-based communications network.

      2. CCTV Field Equipment includes, but is not limited to, the following:

         a. Color video camera units.

         b. Camera lenses, filters, control circuits and accessories.

         c. Camera housings.

         d. Medium duty pan and tilt units.

         e. Camera control receivers.

         f. Video and camera control and power cable harnesses, connectors and coax.

         g. Source ID generator.

         h. Video encoding device to ouput digital video in MPEG4 format.

   B. **Functional Requirements.** Provide CCTV cameras that meet the following criteria:

      1. 525 lines per frame, interlaced 2:1, per EIA-170A Standard.

      2. No discernible interlace jitter or line pairing on the viewing monitor.

      3. Frame frequency of 30 frames per second.

4. Width to height aspect ratio of 4:3.

5. System limiting resolution that conforms to FCC regulations for broadcast signals.

6. System capable of providing clear, low-bloom and low-lag video pictures under all conditions from bright sunlight to nighttime scene illumination of 0.85 foot-candle (fc) with full video AGC (Automatic Gain Control) off.

7. Color quality that is maintained by a continuous through the lens automatic white balance for color temperatures from 2850K to greater than 5100K with less than 10 IRE units unbalance.

8. Operational in all weather conditions and able to withstand a wind load of 80 mph without permanent damage to mechanical and electrical equipment.

9. Equipment that is identical at each field location and completely interchangeable.

10. Equipment with communications protocol command sets in the public domain.

C. Electrical and Mechanical Requirements.

1. **Video Camera Unit.** Provide color video cameras that are of solid state design, that meet the following requirements:

   a. Digital Signal Processing (DSP):

      (1) For digital zoom.

      (2) For auto/manual long-term integration (exposure) control, with built-in frame buffer.

      (3) For auto-focus.

      (4) For built-in ID generator, with white letters and black outline.

   b. **Image Pickup Device.** 1/4 in. single chip interline transfer solid state color matrix CCD microlens sensor.

   c. **Pickup Device Blemishes.** No blemishes for any iris opening producing any signal level between 7.5 and 100 IRE, when viewing a uniform white field.

   d. **Sensitivity.** Maintain full p-p video with 0.1 fc., 3200°K incandescent illumination on the image device face plate with AGC off.

   e. **Resolution.** >350 lines vertical and >460 lines horizontal, measured per EIA-170A Standard.

   f. **Over Exposure Protection.** No permanent damage to the camera when pointed directly at strong light sources, including the sun, for brief periods of time.

   g. **Encoded NTSC Video Signal Format.** EIA-170A Standard, video output 1 Volt p-p composite. Provide up to 16 dB AGC.

h. Output Impedance. 75 Ohms ± 5%.

i. Aspect Ratio. 4:3.

j. Geometric Distortion. Zero.

k. **Signal to Noise Ratio (AGC Off).** 50 dB Minimum (weighted at 4.5 MHz).

(1) Provide a sensor having a minimum of 768 (H) X 493(V) pixels.

l. **Electronic Shutter Speed.** Capable of being selectable from a remote location with the use of software.

m. Encoder. A video encoder to output digital video in MPEG4 format shall be furnished as a separate unit if the camera cannot output digital video.

2. Camera Accessories. Provide an integral lens assembly for each camera with the following features:

a. An f/1.4 or better glass multi-coated zoom lens with variable focal length from 3.4 mm to 119 mm (35X zoom lense).

b. 12X auto/manual digital zoom.

c. Motorized iris control with manual override with each lens.

d. Lenses with capabilities for remote control of the zoom, focus and iris operations. Mechanical or electrical means provided to protect the motors from overrunning in extreme positions. Lens and controller system capable of both auto iris and remote manual iris operation. Capabilities of lens for the zoom and focus. Motorized iris as opposed to auto iris type, for system control capability.

e. Lense wiper assembly with replaceable wiper blade. Provide 2 spare wiper blades for each CCTV supplied.

3. Camera Housing.

a. Furnish and install an environmentally resistant, tamper proof pressurized housing with 5 pounds psi dry Nitrogen with Schrader purge fitting and 20 psi relief valve for each camera. Conform to IP-67 Standard.

~~b.~~ Maintain internal humidity of housing of 5% or less when sealed and pressurized.

~~c.~~ Properly label internal wiring. Use a gas-tight connector at the rear plate of the housing. Seal wiring to the connector with silicon or potting compound.

d. Construct viewing window in such a way that unrestricted camera views can be obtained at all camera and lens positions.

e. Provide a sun shield to shield the entire housing from direct sunlight. Provide an additional "eyebrow" type sunshield if directed by the Engineer.

Construct the shield in such a way as to allow the free passage of air between the housing and the shield, but not form a "sail" to place an excessive load on the pan/tilt unit in high winds.

f. Provide entry at the rear and/or bottom for cables and harness, with gaskets at the entry points to prevent moisture entry.

g. Provide a 6 watt low temperature heater with its own thermostat control for each housing.

h. Provide lightning protection for each camera housing, unless otherwise shown on the plans.

i. An alternate design comprised of a camera housing and pan-tilt mechanism manufactured together in a single assembly may be submitted to the Engineer for approval.

4. Pan-Tilt Unit.

a. Furnish and install a medium duty, anodized aluminum weatherproof pan-and-tilt-unit at each camera site, conforming to IP-66 Standard. Provide any mounting adapter and/or attachment required to install the pan-and-tilt-unit. Show the bolt pattern on submittal. Design mounting for the camera housing and the pan and tilt unit to withstand a wind load of 80 mph.

b. Provide a unit capable of vertical movement of +90° to -90° and horizontal movement of 360°, full, continuous rotation movement, a tilt speed of 40° per second, pan speed up to 80° per second, no load, and capable of simultaneous pan-and-tilt movements.

c. Provide a unit that has a load rating compatible with that of the camera housing, camera and all cabling, under a wind load of 80 mph and acceleration/deceleration conditions specified. Provide analyses of the loading on the pan-and-tilt assembly based on the above criteria.

d. Use stepper motors.

e. Ensure that the pan-and-tilt unit has seals and gaskets to protect the motors, gears, and cables and that the seals and gaskets are resistant to ozone, ultraviolet radiation, and other pollutants inherent to all local environmental conditions.

f. Provide pan-tilt unit with heater that conforms to NEMA 4X Standard.

g. An alternate design comprised of a camera housing and pan-tilt mechanism manufactured together in a single assembly may be submitted to the Engineer for approval.

5. Control Receivers.

a. Mount the camera control receiver inside the camera unit. Ensure that the camera control receiver will execute all camera and lens functions as well as

forward communication of commands for the pan/tilt functions to the pan/tilt control receiver. Mount the pan/tilt control receiver inside the pan/tilt unit.

b. Ensure that when the control receiver receives the data from the camera controller, it decodes the digital command data signals transmitted through the communication transmission interface, checks for errors, and acts on valid data to drive the pan/tilt unit and the camera controls per the furnished camera control software that follows communications protocols in the public domain or as approved by the Engineer.

6. **Power Supplies.** Include all power supplies required to operate the camera, pan/tilt and lens movements with the housing, camera control receiver and pan/tilt unit.

7. **Communications Interface.** Ensure that the Camera Control receiver will interface to the TransGuide Operations Control Center through an EIA-232CD port using a 9600 baud data rate. Provide all necessary connectors and harness to connect to the communications equipment interface. Provide the RS-232 to RS-422 self-powered converter, integral to the video communications equipment.

8. **Power Input.** Provide 115 VAC ± 10%, 60 Hz ± 3 Hz, 70 Watts Maximum.

9. **Connectors.** Provide and install connectors that are compatible with the communications equipment interface. Use an AMP type connector and pin assignments that are compatible with existing installations. Use connectors for connections at the pan/tilt mechanism, and make connections through a pigtail with connector on it, coming out of the bottom center of the pan/tilt unit. Use this connector to make connections to the transmission cables. Supply all mating connectors. Provide all connector pins and mating connectors that are plated to ensure good electrical connection and resistance to corrosion. Use pressure tight multi-conductor MS-type cable connectors for camera connections.

10. **Source ID Generator.** Use a built-in ID Generator to insert camera ID over each of the camera-generated videos or as directed by Engineer.

    a. Submit a list of proposed camera identification text to the Engineer for approval before the ID is programmed.

    b. Once approved, ensure that the programmed ID is automatically displayed with its associated video signal.

11. **Video Communication.** Install video communication equipment in the Traffic Signal Controller Cabinet and connect to the City of San Antonio switch or as directed by the Engineer. Ensure that it meets the following criteria:

    a. Contains all the lightning protection devices for data and video.

    b. Grounded to earth ground.

c. Has connectors for all inputs and outputs for data and video and additional ports for testing video and communications. Use the external connectors for testing and for connections to communication devices.

12. **Surge Protection.** Ensure that camera installation meets the following requirements:

    a. Pole mounting adapter – Electrically bonded to pole.

    b. Pan/tilt mechanism – Electrically bonded to adapter.

    c. Camera housing – Electrically bonded to pan/tilt unit.

    d. Protected by the appropriate Power and Control Cable surge protector, provide circuit breakers, radio interference filters, ground loop isolators, lightning arresters and surge protectors to protect the circuit and the CCTV Field Equipment..

13. **Power Requirements.** Ensure that the CCTV field equipment meets all of its specified requirements when the input power is 115 VAC ± 10%, 60 Hz ± 3 Hz, and that maximum power required does not exceed 350 watts.

    Ensure that equipment operations is not affected by the transient voltages, surges and sags normally experienced on commercial power lines. Check the local power service to determine if any special design is necessary for the equipment. Any extra cost is included in this item.

14. **Primary Input Power Interruption.** Ensure that the CCTV field equipment meets all the requirements in Section 2.1.4., "Power Interruption" of the National Electrical Manufacturers Association (NEMA) Standard TS1 for Traffic Control System.

15. **Power Service Transients.** Ensure that the CCTV field equipment meets the requirements for Section 2.1.6., "Transients, Power Service" of the NEMA Standard TS1.

16. **Wiring.** Ensure that all wiring meets the requirements of the National Electrical Code. Cut all wires to the proper length prior to assembly. Never double-back wire to take up slack. Neatly lace wires into cable with nylon lacing or plastic straps. Secure cables with clamps. Provide service loops at all connections.

    Provide coaxial cable between the camera and the communications equipment interface that is of the RG-59 type with a stranded center conductor with 100% shield coverage, with a cellular polyethylene dielectric, or a cable as recommended by the manufacturer of the CCTV Field Equipment.

17. **Transient Suppression.** Provide DC relays, solenoids and holding coils that have diodes or other protective devices across the coils for transient suppression.

18. **Power Service Protection.** Ensure that equipment contains readily accessible, manually reset able or replaceable circuit protection devices (such as circuit

breakers or fuses) for equipment and power source protection. Provide circuit breakers or fuses sized such that no wire, component, connector, PC board or assembly is subjected to sustained current in excess of their respective design limits upon failure of any single circuit element or wiring.

19. **Fail Safe Provision.** Ensure that the equipment is designed such that any failures will not cause the failure of any other unit of equipment.

20. **Modular Design.** Provide CCTV equipment that is modular in design, to allow major portions to be readily replaced in the field. Clearly identify modules and assemblies with name, model number, serial number and any other pertinent information required to facilitate equipment maintenance.

21. **Connectors and Harnesses.** Make all external connections by means of connectors that are keyed to prelude improper hookups. Color-code and/or appropriately mark all wires to and from the connectors. Provide connecting harnesses of appropriate length and terminated with matching connectors for interconnection with the communications system equipment. Ensure that all pins and mating connectors are plated to improve conductivity and are corrosion resistant. Ensure that connectors utilizing solder type connections have each soldered connection covered by a piece of heat shrink tubing securely shrunk to protect the connection.

D. **Environmental Design Requirements.** Ensure that equipment conforms to NEMA Standard 2.1.5.1 and meets all its specified requirements during and after being subjected to any combination of the following conditions:

1. Ambient temperature range of -29°F to 165°F.

2. Temperature shock not to exceed 30°F per hour.

3. Relative humidity up to 100%.

4. Moisture condensation on all exterior surfaces caused by temperature changes.

5. Camera and environmental housing assembly performs to stated specifications over an ambient temperature range of -29°F to 165°F in direct sunlight and a humidity range of 0% to 100% condensing. Ensure that the camera will operate without sustaining damage over a temperature range of -29°F to 165°F.

3. **Construction.**

A. **General.** To maximize standardization and commonality, utilize the latest available techniques in equipment design and construction, with the minimum number of parts, subassemblies, circuits, cards, and modules. Design equipment for ease of maintenance. Ensure that all component parts are readily accessible for inspection and maintenance. Provide test points for checking essential voltages and waveforms.

4. **Electronic Components. Description.** Use electronic components to manufacture electronic equipment.

A. **Materials and Construction Methods.** Use electronic components that comply with Electronic Industries Association (EIA) and Joint Electronic Device Engineering Council (JEDEC) Specifications. Provide industry standard electronic components available from several manufacturers. When special monolithic integrated circuits are necessary for cost-effective designs, waiving the multi-source requirements will be as directed.

Design the electronic circuitry to ensure an adjustment range from normal adjustment settings of variable components. Provide a range of adjustment to compensate for composite variations in the associated circuitry due to changes in part values during the normal or specified life of the device. Ensure the range of adjustment can compensate for variations in replacement parts within the specified tolerances. Unless otherwise shown on the plans, design the components to be under operating conditions 24 hr. a day for 10 yr. Derate electronic components by 20% with regard to ambient temperature, applied voltage, and power dissipation.

On electronic components weighing more than 2 oz., use supports other than the component's pins or electrical connectors. Solder electronic components of 2 or more leads in place. Mark the circuit reference symbol next to the component.

Meet the above requirements and satisfy the following specific requirements for the different components:

B. **Capacitors**. Provide industrial grade capacitors. Insulate the capacitors. Mark capacitors with their capacitance value, working voltage, and polarity.

Provide capacitor encasements resistant to cracking, peeling, and discoloration due to humidity and changes in temperature. Provide electrolytic capacitors capable of operating at least 185°F. Do not use electrolytic capacitors of less than 1.0 microfarad.

Use a clamp or fastener to support a capacitor to avoid damage by shock or vibration. Use a capacitor with a specific ripple or AC voltage rating, if possibly subjected to a ripple voltage in excess of 10% of the actual DC voltage across the capacitor. Use an aluminum electrolytic capacitor only when continually energized.

C. **Diodes.** If low forward drop is required in logic circuit applications, furnish justification for use of Germanium diodes prior to incorporation in the design. Mark diodes with the JEDEC part number, using an industry approved color code or clearly legible printing. Indicate the diode polarity on the diode case by the use of the diode symbol, by the 360° band on the cathode end, or by the shape of case.

D. **Indicators.** Use solid-state (LED) indicators with a useful life at least 25,000 hr.

E. **Integrated Circuits.** Print the manufacturer's part number and any information required to install the integrated circuit assembly upon the package. Test integrated circuits with at least 1 test from each group below:

1. **Group 1**
   - Stabilization Bake
   - Temperature Cycling

- Power Burn-in

2. **Group 2**
   - Functional test with the device at the manufacturer's maximum specified temperature
   - Static and dynamic test per manufacturer's data sheet

F. **Potentiometers and Rheostats.** Use industrial grade potentiometers. Use potentiometers with a power rating at least 100% greater than the maximum power requirements of the circuit.

G. **Printed Circuit Boards.**

1. **Design, Fabrication and Mounting.** Use NEMA Grade G-10 glass epoxy or equivalent for printed circuit boards (refer to NEMA Publications No. L1 1-1982, Industrial Laminated Thermosetting Products). Provide a nominal thickness of 1/32 in. for circuit boards not exceeding 2 in. in any dimension. Provide a nominal thickness of 1/16 in. for circuit boards exceeding 2 in. in any dimension.

   Coat the printed circuit board assembly with a protective coating to combat mildew, moisture, and fungus. Plate the through holes that carry electrical connections from one side of the board to the other. Use 1 oz./sq. ft. of copper to plate through holes. Use non-corrosive material for electrical mating surfaces.

   Design and fabricate printed circuit boards and the mounting of parts and assemblies in accordance with MIL-STD-275 (latest revision) except as follows:

   - Mount semiconductor devices on spacers or transipads if the device dissipates more than 250 mW. or if the case temperature will rise 20°F above ambient.
   - Remove residual flux from the printed circuit board.
   - Provide a resistance between any 2 isolated, independent conductor paths of at least 100 megohms when a 500 VDC potential is applied.

   Mark operating circuit components mounted on the circuit boards. Reference the identifying characters to their respective components in the schematic diagram and in the parts list.

2. **Soldering.** Hand solder in accordance with MIL-STD-55110. Use of automatic flow soldering is acceptable.

H. **Relays.** Install diodes across the coils for transient suppression in DC relays. Provide replaceable relays that do not require special tools for replacement.

I. **Resistors.** Use fixed composition insulated resistors in accordance with the performance requirements of MIL-R-11. Provide industrial grade resistors with a 15 yr. design life. Mark with their resistance value, using EIA color codes or industry approved marking technique.

   Use resistors with a 10% tolerance or better and a resistance variation of no more than 5% over the temperature range 0°F to 165°F. Do not use resistors with a power rating

greater than 2 w., unless special ventilation or heat sinking is provided. Insulate these resistors from the printed circuit board.

J. **Transistors.** Use JEDEC registered transistors. Mark the JEDEC part number on the case. Designate the emitter or collector by use of an industry approved marking technique.

K. **Transformers.** Mark transformers with the manufacturer's part number on the case or frame, using a Radio-Electronics-Television Manufacturers Association (RETMA) color code or numbered in a manner to facilitate proper installation.

L. **Switches.** Derate switch contacts 50% from their maximum current ratings.

M.

5. **Mechanical Components.** Ensure that all external screws, nuts and locking washers are stainless steel. Do not use self-tapping screws unless specifically approved by the Engineer.

   1. Provide parts that are made of corrosion resistant material such as plastic, stainless steel, anodized aluminum or brass.

   2. Protect all materials used in construction from fungus growth and moisture deterioration.

   3. Separate dissimilar metals by an inert dielectric material.

6. **Documentation Requirements.** Provide 5 complete sets of operation and maintenance manuals that include the following:

   A. Complete and accurate schematic diagrams.

   B. Complete installation procedures.

   C. Complete performance specifications (Functional, electrical, mechanical and environmental) on the unit.

   D. Complete parts list including names of vendors for parts not identified by universal part number such as JEDEC, RETMA, or EIA.

   E. Pictorial of component layout on circuit board.

   F. Complete maintenance and trouble-shooting procedures.

   G. Complete stage-by-stage explanation of circuit theory and operation.

5. **Testing Requirements.**

   A. As per TxDOT policy, performance testing is to be done on all materials and equipment not previously tested and approved. If technical data are not considered adequate for approval, samples may be requested for test by the Engineer. The contract period will not be extended for time loss or delays caused by testing prior to final TxDOT approval of any items.

B. Equipment referenced to this specification is subject to Design Approval Tests and Factory Demonstration Tests at the equipment manufacturer's facility, to determine conformance with all the specification requirements. The Engineer may accept certification by an independent testing laboratory in lieu of the design Approval Tests, to verify that the Design Approval Tests have previously been satisfactorily completed. Arrange for, and conduct the tests, in accordance with the specification requirements stated herein.

C. Take responsibility for satisfying all inspection requirements prior to submission for TxDOT's inspection and acceptance. The Engineer reserves the right to have his/her representative witness all Design Approval Tests and Factory Demonstration Tests.

D. Results of each test will be compared with the requirements specified herein. Failure to conform to the requirements of any test will be counted as a defect, and equipment will be subject to rejection by the Engineer. Rejected equipment may be offered for retest, provided all non-compliances have been corrected and retested and evidence thereof submitted to the Engineer.

6. **Warranty.** Guarantee that equipment furnished and installed for this project performs according to the manufacturer's published specifications. Warrant the equipment against defects and/or failure in design, materials, and workmanship in accordance with the manufacturer's standard warranty. Assign, to the Department, all manufacturers' normal warranties or guarantees on all such electronic, electrical, and mechanical equipment, materials, technical data, and products furnished for and installed on the project. Repair or replace, at the manufacturer's option, defective equipment, during the warranty period at no cost to the Department. Ensure that all equipment has no less than 95% of the manufacturer's standard warranty remaining, on the date that equipment invoices are submitted for payment. Any equipment with less than 95% of its warranty remaining will not be accepted by the Department.

7. **Experience Requirements.** Contractor involved in the installation and testing of video equipment as described within these specifications must meet the following requirements:

A. Three years experience in the installation and testing of video equipment as described within these specifications.

B. Two installed systems where video equipment, as described within these specifications, is installed and the system has been in continuously satisfactory operation for at least two years. Submit as proof, photographs or other supporting documents, and the names addresses and phone numbers of the operating personnel who can be contacted regarding the system.

C. One video system (which may be one of the two in the preceding paragraph) that can be arranged for demonstration to the Engineer and/or his/her representatives.

8. **Training.** Conduct a training class (minimum of 40 hours) for up to 10 representatives designated by City of San Antonio on procedures of installation, operations, testing, maintenance and repair of all equipment specified within these specifications. Submit to the Engineer for approval, 10 copies of the training material at least 30 days before the training begins. Conduct training within the local area unless otherwise authorized by the Engineer.

Customize the training specifically for the City of San Antonio Traffic Signal System. Video tape the entire training session on VHS (1/2 in.) tapes, and deliver to the City of San Antonio for later use.

9. **Measurement.** This Item will be measured as each unit furnished, installed, made fully operational and tested in accordance with these specifications or as directed by the Engineer.

10. **Payment.** The work performed and materials furnished in accordance with this Item and measured as provided under "Measurement" will be paid for at the unit bid price for "CCTV Field Equipment". This price includes all equipment with all cables and connectors; the cost of furnishing all labor, materials, training, software, equipment, and incidentals.

SPECIAL SPECIFICATION 6007

REMOVING TRAFFIC SIGNALS

6007.1 DESCRIPTION:

This item governs the removal, storage, and salvage of traffic signals.

6007.2 CONSTRUCTION:

Traffic signals must remain in operation during construction until their removal as directed. The Contractor will not be responsible for maintenance of the signals during this period of operation.

Remove existing electrical services, pedestal poles, strain poles, mast arm pole assemblies, luminaires, signal heads, controllers, cables, and other accessories. Remove materials so that damage does not occur. Remove and store items designated for reuse or salvage at locations shown on the plans or as directed.

Remove abandoned concrete foundations to a point 2 ft. below final grade. Backfill hole with material equal in composition and density to the surrounding area. Replace surfacing material with similar material to an equivalent condition.

Accept ownership of unsalvageable materials and dispose of in accordance with federal, state, and local regulations.

6007.3 MEASUREMENT:

This Item will be measured as each signalized intersection removed. A signalized intersection is a group of signals operated by a single controller.

6007.4 PAYMENT:

The work performed and materials furnished in accordance with this Item and measured as provided under "Measurement" will be paid for at the unit price bid for "Removing Traffic Signals." This price is full compensation for removing the various traffic signal components; removing the foundations; disposal of unsalvageable material; hauling; and equipment, labor, tools, and incidentals.

6007.5 BID ITEM:

Item 6007.01 – Removing Traffic Signals – per each

MOUNTING LOCATIONS

PRESENCE (RPDD)

① PREFERRED PLACEMENT FOR MAST ARMS. MOUNT ON AND BELOW MAST ARM ON NEAR SIDE OF STREET.

② PREFERRED PLACEMENT FOR TIMBER POLE OR STRAIN POLE INSTALLATIONS. MOUNT AS HIGH AS POSSIBLE TO A MAXIMUM OF 30 FT ON TIMBER OR SPAN WIRE POLES. ON MAST ARM POLES, MOUNT BELOW CONNECTION OF MAST ARM TO A MINIMUM OF 15 FT.

③ ALTERNATE PLACEMENT LOCATION. MOUNT AS HIGH AS POSSIBLE TO A MAXIMUM OF 30 FT TO PREVENT OCCLUSION OF THE LEFT TURN LANES. THIS PLACEMENT TO BE USED ONLY IF RPDD CANNOT BE MOUNTED IN THE PREFERRED PLACEMENT LOCATIONS.

ADVANCE (RADD)

Ⓐ PREFERRED PLACEMENT FOR MAST ARMS. ALIGN RADD WITH CENTER OF TRAVEL LANES.

Ⓑ ALTERNATE PLACEMENT FOR MAST ARMS. MOUNT ON BACK SIDE OF OPPOSING MAST ARM.

Ⓒ TIMBER OR STRAIN POLE PLACEMENT. MOUNT ON NEAR SIDE POLE.

Ⓓ ALTERNATE TIMBER OR STRAIN POLE PLACEMENT. MOUNT LUMINAIRE ARM ON NEAR SIDE POLE WITH A MAXIMUM 40 FT MOUNTING HEIGHT.

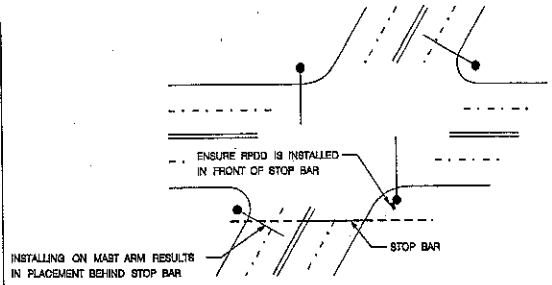

SKEWED INTERSECTION RPDD PLACEMENT
NTS

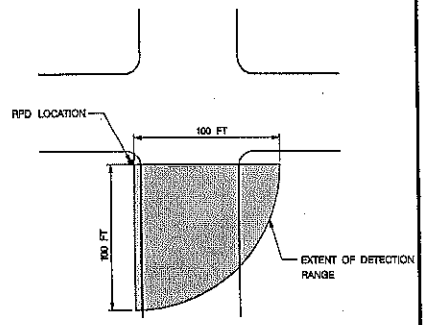

TYPICAL RPDD DETECTION RANGE
NTS

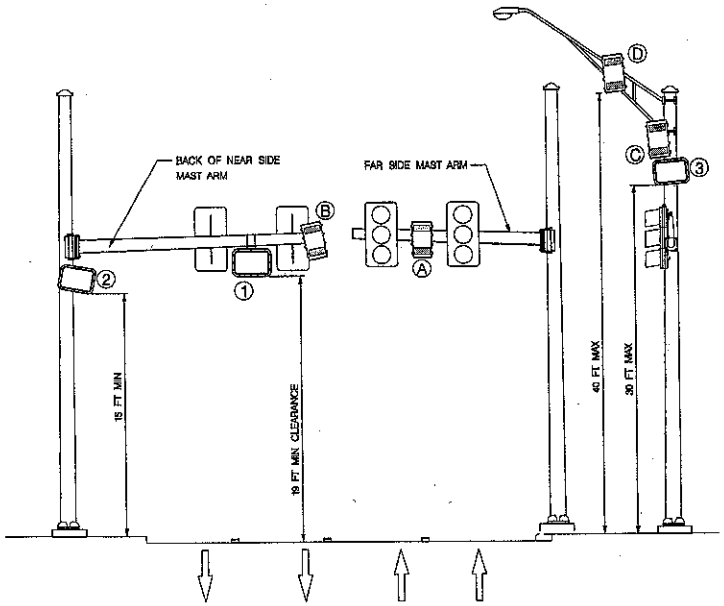

ELEVATION VIEW
NTS

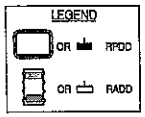

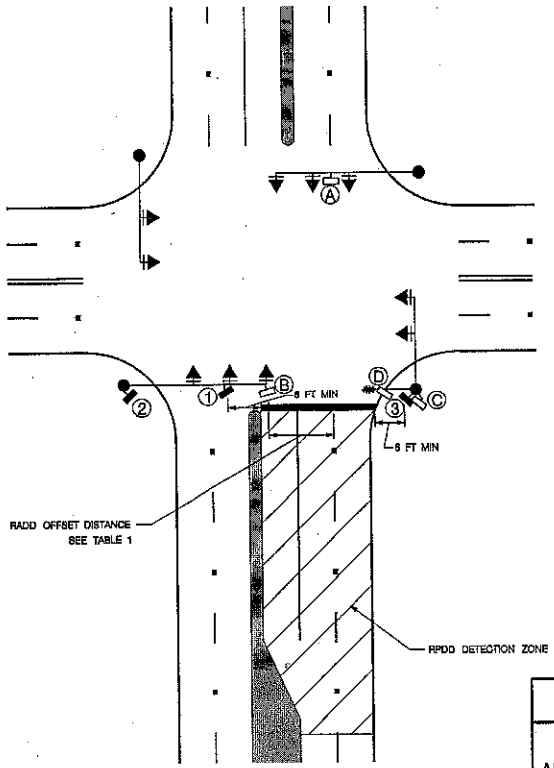

PLAN VIEW
NTS

NOTES:

1) A MINIMUM 8 FT HORIZONTAL OFFSET MUST BE MAINTAINED BETWEEN THE RPDD AND THE DETECTION ZONE

2) THE RPDD SHALL BE MOUNTED SUCH THAT AT LEAST 20 FT ALONG THE FARTHEST LANE TO BE MONITORED IS WITHIN THE FIELD OF VIEW OF THE RPDD

3) AIM RPDD AT THE CENTER OF THE LANES TO BE MONITORED, APPROXIMATELY 50 FT FROM THE RPDD UNIT

4) MOUNT RPDD SO THAT ITS FIELD OF VIEW IS NOT OCCLUDED BY POLES, SIGNS, OR OTHER STRUCTURES

5) RADD MOUNTING HEIGHT SHALL NOT BE LESS THAN 17 FT OR GREATER THAN 40 FT. RADD MOUNTING LOCATION SHALL HAVE A MAXIMUM 50 FT LATERAL OFFSET FROM CENTER OF TRAVEL LANES TO BE MONITORED

APRIL 2010

CITY OF SAN ANTONIO
DEPARTMENT OF PUBLIC WORKS

TRAFFIC SIGNAL STANDARDS

RADAR PRESENCE DETECTOR (RPDD) AND RADAR ADVANCE DETECTOR (RADD) PLACEMENT

SHEET 1 OF 1

% SUBMITTAL	PROJECT NO.:	DATE:
DRWN. BY: DNM	DSGN. BY: DNM	CHKD. BY: GDG	SHEET NO.: OF

DISCLAIMER: The use of this standard is governed by the "Texas Engineering Practice Act". No warranty of any kind is made by TxDOT for any purpose whatsoever. TxDOT assumes no responsibility for the conversion of this standard to other formats or for incorrect results or damages resulting from its use.

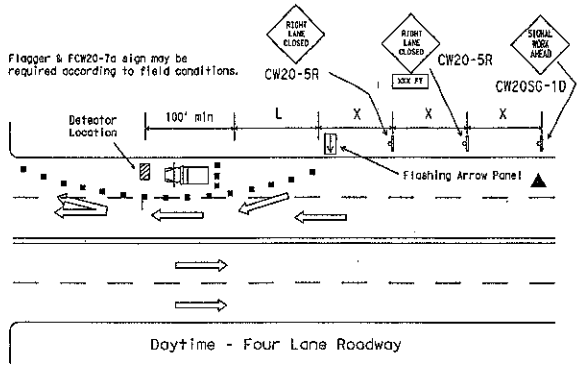

Posted Speed	Formula	Minimum Desirable Taper Lengths ** 10' Offset	11' Offset	12' Offset	Suggested Maximum Spacing of Device On a Taper	On a Tangent	Minimum Sign Spacing X Distance
30	$L = \frac{WS^2}{60}$	150'	165'	180'	30'	60'-75'	120'
35		205'	225'	245'	35'	70'-90'	160'
40		265'	295'	320'	40'	80'-100'	240'
45	L=WS	450'	495'	540'	45'	90'-110'	320'
50		500'	550'	600'	50'	100'-125'	400'
55		550'	605'	660'	55'	110'-140'	500'
60		600'	660'	720'	60'	120'-150'	600'
65		650'	715'	780'	65'	130'-165'	700'
70		700'	770'	840'	70'	140'-175'	800'
75		750'	825'	900'	75'	150'-185'	900'

**Taper lengths have been rounded off.
L=Length of Taper (FT.) W=Width of Offset (FT.) S=Posted Speed (MPH)

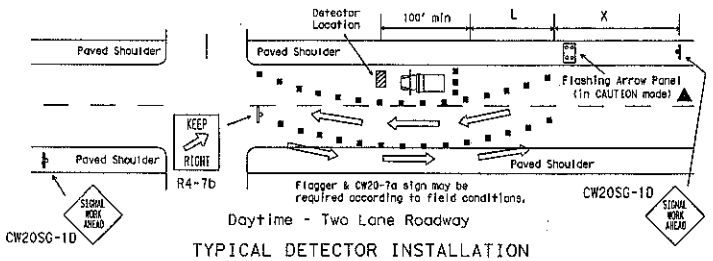

TYPICAL DETECTOR INSTALLATION

OR OTHER WORK OPERATIONS THAT ARE SHORT TERM OR SHORT DURATION

Nighttime Channelizing Devices shall be reflectorized.

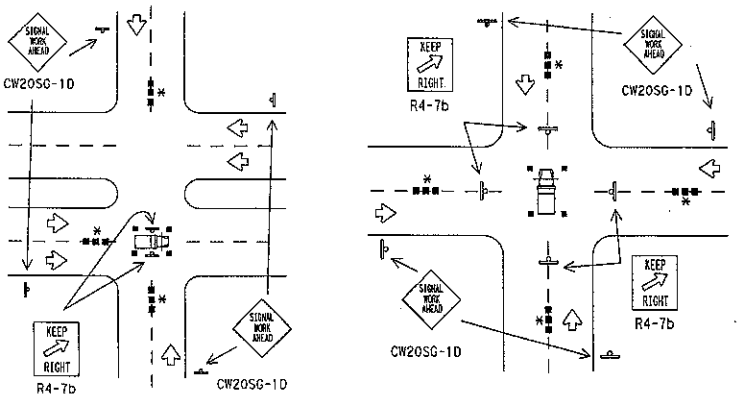

TYPICAL HANGING SIGNAL INSTALLATIONS

OR OTHER WORK OPERATIONS THAT ARE SHORT TERM OR SHORT DURATION

* Advance warning channelizing devices are optional.

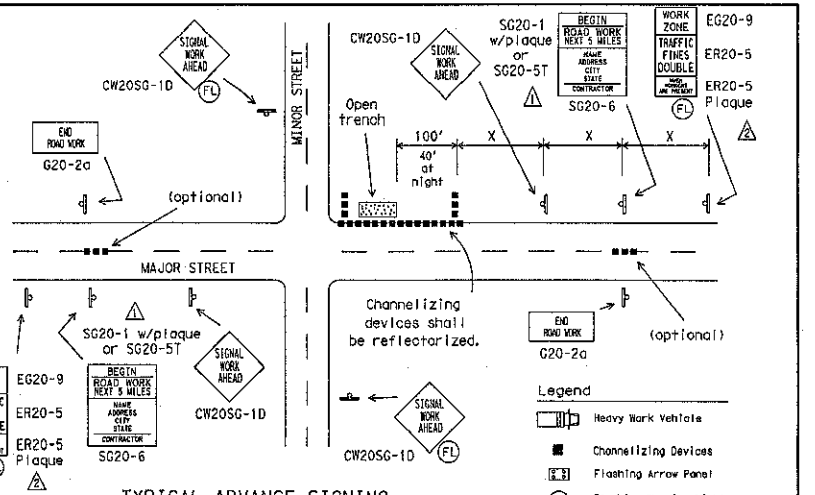

TYPICAL ADVANCE SIGNING

FOR LONG TERM and INTERMEDIATE-TERM STATIONARY WORK OPERATIONS

Observe Warning Signs State Law (R20-3) shall be required.
See BC(2).
Location will be as directed by the Engineer.

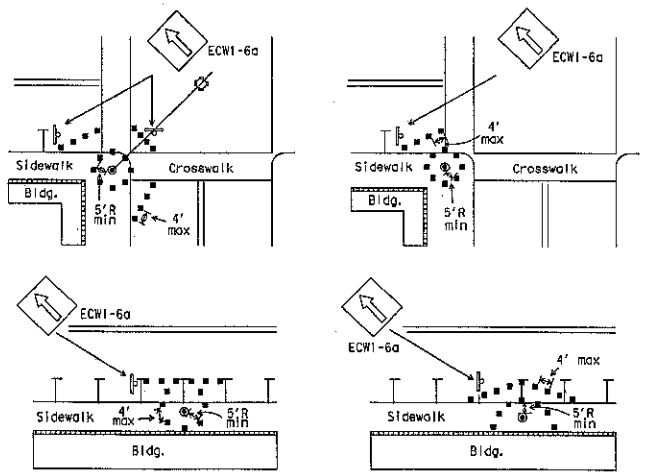

Channelizing devices should not be placed closer than 5 foot radius (minimum) to signal poles.
Parking may be eliminated by placing channelizing devices in spaces.
If pedestrian walkways are blocked, refer to the Texas Manual on Uniform Traffic Control Devices (TMUTCD) Part 6.

TYPICAL RESTRICTED PEDESTRIAN MOVEMENTS

FOR ALL WORK OPERATIONS REGARDLESS OF WORK DURATION

▲ The arrow panel may be omitted when stated elsewhere in the plans.

1. Typical channelizing device is the 28" cone.
2. Plastic drums or vertical panels may be used if approved by the Engineer.
3. For several closely adjoining projects, advance signing may not be required in advance of each intersection, but only in advance of the intersections at the project limits.
4. See details elsewhere in the plans for advance signing requirements.
5. Advance signs shall be in place when signal construction operations are in progress.
6. The contractor shall remove advance signs when no construction operations are underway.
7. Obstructions or hazards at the work area shall be clearly marked and delineated at all times.
8. All holes, trenches or other hazardous areas shall be adequately protected by lights or other protective devices.
9. Trenches shall be covered or surrounded with orange plastic construction fence as directed by the Engineer.
10. Flagger and FCW20-7a sign may be required according to field conditions.
11. Vehicles parked in roadway shall be equipped with two strobes.
12. High level flags at corners of vehicle may also be used.
13. Work operations that require work vehicle in traveled way 20 minutes or less may use cones, high level flags and strobes as advance warning devices.
14. Cones should only be placed around vehicle.
15. Flaggers may be used on high speed rural intersections.

Texas Department of Transportation
Traffic Operations Division

TRAFFIC SIGNAL INSTALLATION TYPICAL DETAILS

SHEET 1 OF 2 WZ(BTS-1)-03

© TxDOT April 1992

© TxDOT April 1992	FILE TxDOT	CK: TxDOT	DN: TxDOT	CK: TxDOT
REVISIONS	CONT	SECT	JOB	HIGHWAY
2-98 4-98 10-99 3-03	DIST		COUNTY	SHEET NO.

116A

DATE:
FILE:

DISCLAIMER: The use of this standard is governed by the "Texas Engineering Practice Act". No warranty of any kind is assumed by the Texas Department of Transportation for any purpose whatsoever. TxDOT assumes no responsibility for the conversion of this standard to other formats or for incorrect results or damages resulting from its use.

"ABOVE LANE" WORK PERFORMED BY BUCKET TRUCK

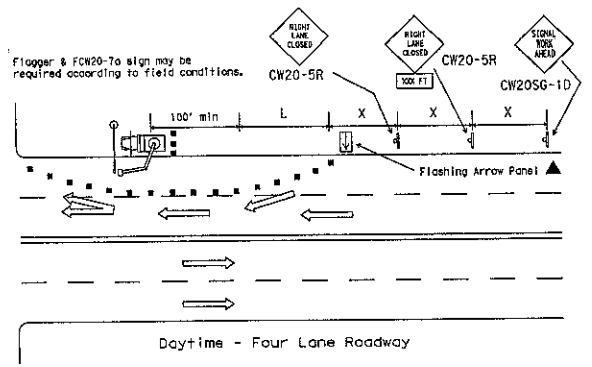

Daytime - Four Lane Roadway

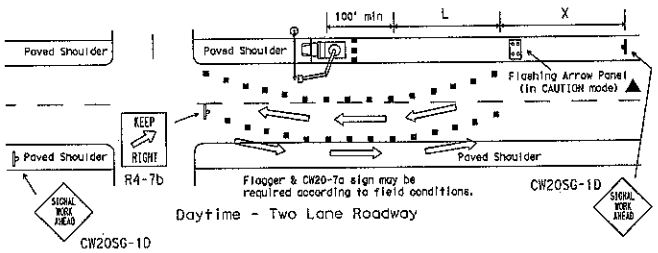

Daytime - Two Lane Roadway

▲ The arrow panel may be omitted when stated elsewhere in the plans.

"ABOVE TRUCK" WORK PERFORMED BY BUCKET TRUCK

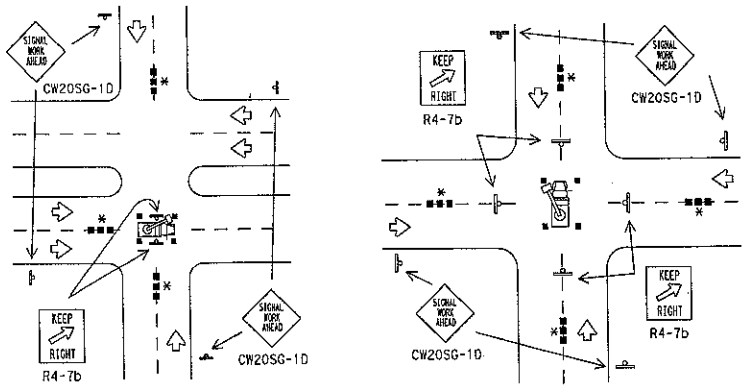

GENERAL NOTES FOR WORK ZONE SIGNS

1. Contractor shall install and maintain signs in a straight and plumb condition and/or as directed by the Engineer.
2. Wooden sign posts shall be painted white.
3. Barricades shall NOT be used as sign supports.
4. Nails shall NOT be used to attach signs to any support.
5. All signs shall be installed in accordance with the plans or as directed by the Engineer. Signs shall be used to regulate, warn, and guide the traveling public safely through the work zone.
6. The Contractor may furnish either the sign design shown in the plans or in the "Standard Highway Sign Designs for Texas" (SHSD). The Engineer/Inspector may require the Contractor to furnish other work zone signs that are shown in the "Texas Manual on Uniform Traffic Control Devices" (TMUTCD) but may have been omitted from the plans. Any variation in the plans shall be documented by written agreement between the Engineer and the Contractor's Responsible Person. All changes must be documented in writing before being implemented. This can include documenting the changes in the Inspector's TxDOT diary and having both the Inspector and Contractor initial and date the agreed upon changes. The additional signs requested by the Engineer/Inspector shall not be subsidiary.
7. The Contractor shall furnish sign supports listed in the "Compliant Work Zone Traffic Control Device List" (CWZTCD). The Contractor shall install the sign support in accordance with the manufacturer's recommendations. If there is a question regarding installation procedures, the Contractor shall furnish the Engineer a copy of the manufacturer's installation recommendations so that the Engineer can verify the correct procedures are being followed.
8. The contractor is responsible for sign installations and replacing signs with damaged or cracked substrates and/or damaged or marred reflective sheeting as directed by the Engineer/Inspector.
9. Identification markings may be shown only on the back of the sign substrate. The maximum height of letters and/or company logos used for identification shall be 1".
10. The Contractor shall replace damaged wood posts. New or damaged wood sign posts shall not be spliced.

Duration of Work (as defined by the TMUTCD Part 6)

The types of sign supports, the size of signs, and the type of sign substrates can vary based on the type of work being performed. The Engineer is responsible for selecting the appropriate size sign for the type of work being performed. The Contractor is responsible for ensuring that the sign support and substrate meets crashworthiness and length of work requirements.

a. Long-term stationary is work that occupies a location more than 3 days.
b. Intermediate-term stationary is work that occupies a location more than one daylight period up to 3 days, or nighttime work lasting more than 1 hour.
c. Short-term stationary is daytime work that occupies a location for more than 1 hour, but less than 12 hours.
d. Short duration is work that occupies a location up to 1 hour.
e. Mobile is work that moves intermittently or continuously.

SIGN MOUNTING HEIGHT

1. The bottom of Long-term/Intermediate-term signs shall be at least 7 feet, but not more than 9 feet, above the paved surface.
2. The bottom of Short-term/Short Duration signs shall be a minimum of 1 foot above the pavement surface but no more than 2 feet above the ground.
3. Long-term/Intermediate-term Signs may be used in lieu of Short-term/Short Duration signing.
4. Short-term/Short Duration signs shall be used only during daylight and shall be removed at the end of the workday.
5. Regulatory signs shall be mounted at least 7 feet, but not more than 9 feet, above the paved surface regardless of work duration.

REMOVING OR COVERING

1. When sign messages may be confusing or do not apply, the signs shall be removed or completely covered.
2. Long-term stationary or Intermediate stationary signs installed on square metal tubing may be turned away from traffic 90 degrees when the sign message is not applicable. This type of sign support meets the crashworthiness standards regardless of the direction of impact. This technique may not be used for signs installed in the median of divided highways or near any intersections where the sign may be seen from approaching traffic.
3. Signs installed on skids shall not be turned at 90 degree angles to the roadway. These signs should be removed or completely covered when not required.
4. When signs are covered, the material used shall be opaque, such as heavy mil black plastic.
5. Burlap shall NOT be used to cover signs.
6. Duct tape or other adhesive material shall NOT be affixed to a sign face. These materials can damage the retroreflectivity of sign sheeting.
7. Signs shall be removed upon completion of the work.

SIGN SUPPORT WEIGHTS

1. Where sign supports require the use of weights to keep from turning over, the use of sandbags with dry, cohesionless sand is recommended.
2. The sandbags will be tied shut to keep the sand from spilling and to maintain a constant weight.
3. Rock, concrete, iron, steel or other solid objects will not be permitted for use as sign support weights.
4. Sandbags should weigh a minimum of 35 lbs and a maximum of 50 lbs.
5. Sandbags shall be made of a durable material that tears upon vehicular impact.
6. Rubber (such as tire inner tubes) shall NOT be used for sandbags.
7. Rubber bollards (such as those used with cones or edgeline channelizers) shall NOT be used as sign support weights.
8. Sandbags shall only be placed along or laid over the base supports of the traffic control device and shall not be suspended above ground level or hung with rope, wire, chains or other fasteners. Sandbags shall be placed along the length of the skids to weigh down the sign support.
9. Sandbags shall NOT be placed under the skid and shall not be used to level sign supports placed on slopes.

DEPARTMENTAL MATERIAL SPECIFICATIONS

PLYWOOD SIGN BLANKS	DMS-7100
ALUMINUM SIGN BLANKS	DMS-7110
FLAT SURFACE REFLECTIVE SHEETING	DMS-8300
FLEXIBLE ROLL-UP REFLECTIVE SIGNS	DMS-8310
VINYL NON-REFLECTIVE SHEETING	DMS-8320

COLOR	USAGE	SHEETING MATERIAL
ORANGE	BACKGROUND	TYPE E (FLUORESCENT PRISMATIC)
WHITE	BACKGROUND	TYPE C (HIGH SPECIFIC INTENSITY)
WHITE	LEGEND & BORDERS	TYPE C (HIGH SPECIFIC INTENSITY)
BLACK	LEGEND & BORDERS	VINYL NON-REFLECTIVE SHEETING

Only pre-qualified products shall be used. A copy of the "Compliant Work Zone Traffic Control Devices List" (CWZTCD) describes pre-qualified products and their sources and may be obtained by contacting:

Standards Engineer
Traffic Operations Division - TE
Texas Department of Transportation
125 East 11th Street
Austin, Texas 78701-2483
Phone (512) 416-3120
Fax (512) 416-3299

Instructions to locate the "CWZTCD" on TxDOT website are:

Start at website - www.dot.state.tx.us
Click on "About TxDOT",
Click on "Organizational Chart",
Click on Traffic Operations Box,
Click on "Compliant Work Zone Traffic Control Devices",
Click on "View PDF".
This site is printable.

Texas Department of Transportation
Traffic Operations Division

TRAFFIC SIGNAL INSTALLATION BARRICADES AND SIGNS

SHEET 2 OF 2 WZ(BTS-2)-03

© TxDOT April 1992

DATE	REVISIONS
2-98	
4-98	
10-99	
3-03	

FILE: TxDOT	CK: TxDOT	DW: TxDOT	CK: TxDOT
CONT	SECT	JOB	HIGHWAY
DIST	COUNTY		SHEET NO.

116B

DATE:
FILE:

Barricade and Construction (BC) Standard Sheets General Notes:

1. The Barricade and Construction Standard Sheets (BC sheets) are intended to show typical examples for placement of temporary traffic control devices, construction pavement markings, and typical work zone signs. The information contained in these sheets meet or exceed the requirements shown in the "Texas Manual on Uniform Traffic Control Devices" (TMUTCD).
2. The development and design of the Traffic Control Plan (TCP) is the responsibility of the Engineer.
3. The Contractor may propose changes to the TCP that are signed and sealed by a licensed professional engineer for approval. The Engineer may develop, sign and seal Contractor proposed changes.
4. The Contractor is responsible for installing and maintaining the traffic control devices as shown in the plans. The Contractor may not move or change the approximate location of any device without the approval of the Engineer.
5. Geometric design of lane shifts and detours should, when possible, meet the applicable design criteria contained in manuals such as the American Association of State Highway and Transportation Officials (AASHTO), "A Policy on Geometric Design of Highways and Streets", the TxDOT "Roadway Design Manual" or engineering judgment.
6. When projects abut, the Engineer(s) may omit the END ROAD WORK, TRAFFIC FINES DOUBLE, and other advance warning signs if the signing would be redundant and the work areas appear continuous to the motorists. If the adjacent project is completed first, the Contractor shall erect the necessary warning signs as shown on these sheets, the TCP sheets or as directed by the Engineer. The BEGIN ROAD WORK NEXT X MILES sign shall be revised to show appropriate work zone distance.
7. The Engineer may require duplicate warning signs on the median side of divided highways where median width will permit and traffic volumes justify the signing.
8. All signs shall be constructed in accordance with the details found in the "Standard Highway Sign Designs for Texas," latest edition. Sign details not shown in this manual shall be shown in the plans or the Engineer shall provide a detail to the Contractor before the sign is manufactured.
9. The temporary traffic control devices shown in the illustrations of the BC sheets are examples. As necessary, the Engineer will determine the most appropriate traffic control devices to be used.
10. As shown on BC(2), the OBEY WARNING SIGNS STATE LAW sign and the WORK ZONE TRAFFIC FINES DOUBLE sign with plaque shall be erected in advance of the CSJ limits. The BEGIN ROAD WORK NEXT X MILES, CONTRACTOR and END ROAD WORK signs shall be erected at or near the CSJ limits.
11. Except for devices required by Note 10, traffic control devices should be in place only while work is actually in progress or a definite need exists.
12. The Engineer has the final decision on the location of all traffic control devices.
13. Inactive equipment and work vehicles, including workers' private vehicles must be parked away from travel lanes. They should be as close to the right-of-way line as possible, or located behind a barrier or guardrail, or as approved by the Engineer.

Worker Safety Apparel Notes:

1. Workers on foot who are exposed to traffic or to construction equipment within the right-of-way shall wear high-visibility safety apparel meeting the requirements of ISEA "American National Standard for High-Visibility Apparel" labeled as ANSI 107-2004 standard performance for Class 2 or 3 risk exposure. Class 3 garments should be considered for high traffic volume work areas or night time work.

WEB ADDRESSES FOR REFERENCED DOCUMENTS

Compliant Work Zone Traffic Control Devices List (CWZTCD)
http://www.txdot.gov/publications/traffic.htm

Texas Manual on Uniform Traffic Control Devices (TMUTCD)
http://www.txdot.gov/publications/traffic.htm

Standard Highway Sign Designs for Texas (SHSD)
http://www.txdot.gov/publications/traffic.htm

Traffic Engineering Standard Sheets
http://www.txdot.gov/business/disclaim.htm

Material Producer List
http://www.txdot.gov/business/producer*list.htm

Departmental Material Specifications (DMS)
http://www.txdot.gov/services/construction/material*specifications/

Roadway Design Manual
http://www.txdot.gov/services/general*services/manuals.htm

Only pre-qualified products shall be used. The "Compliant Work Zone Traffic Control Devices List" (CWZTCD) describes prequalified products and their sources and may be found on-line at the web address given below or by contacting:

Texas Department of Transportation
Traffic Operations Division - TE
Phone (512) 416-3134

STANDARD PLANS
Texas Department of Transportation
Traffic Operations Division

BARRICADE AND CONSTRUCTION GENERAL NOTES AND REQUIREMENTS

©TxDOT DN: - TxDOT CK: - TxDOT DW: - TxDOT CK: - TxDOT

REVISIONS	STATE DISTRICT	FEDERAL REGION	FEDERAL AID PROJECT			SHEET
		6				
	COUNTY		CONTROL	SECTION	JOB	HIGHWAY

WORK AREAS IN MULTIPLE LOCATIONS WITHIN CSJ LIMITS

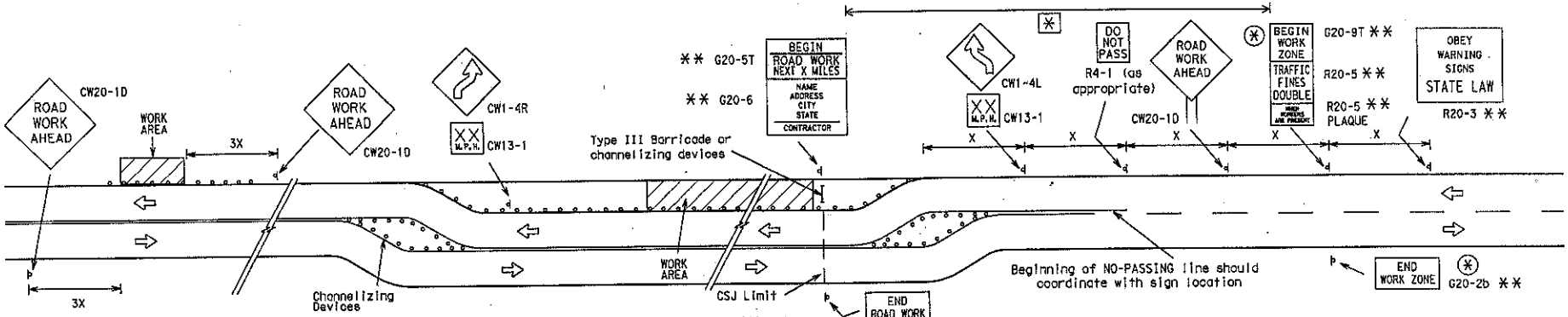

When extended distances occur between minimal work areas, the Engineer/Inspector should ensure additional Road Work Ahead (CW20-1D) signs are placed in advance of these work areas to remind drivers they are still within the project limits. See the applicable TCP sheets for exact location and spacing of signs and channelizing devices.

SAMPLE LAYOUT OF SIGNING FOR WORK BEGINNING AT THE CSJ LIMITS

SAMPLE LAYOUT OF SIGNING FOR WORK BEGINNING DOWNSTREAM OF THE CSJ LIMITS

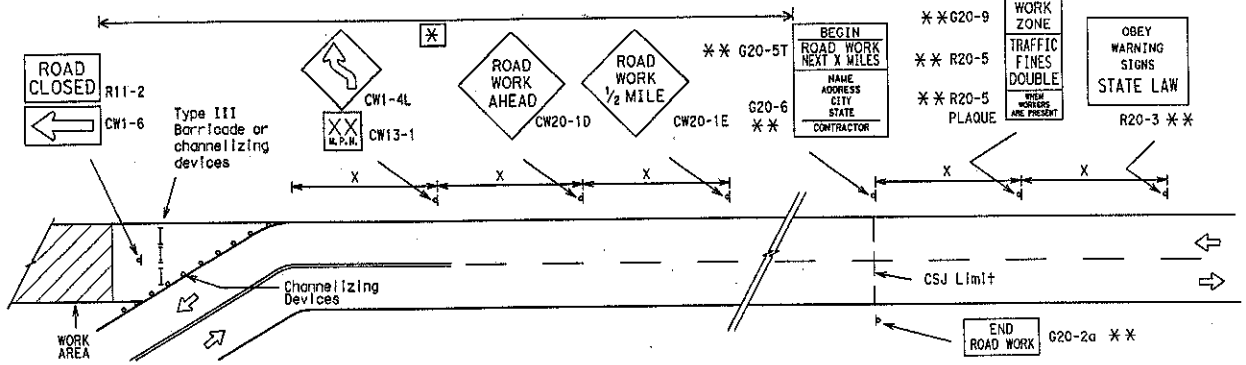

NOTES

The Contractor shall determine the appropriate distance to be placed on the G20-1 series signs and G20-5T sign for each specific project. This distance shall replace the "X" and shall be rounded to the nearest whole mile with the approval of the Engineer. No decimals shall be used.

(*) The G20-9T and G20-2b shall be used when advance signs are required outside the CSJ Limits. They inform the motorist of entering or leaving a work zone where traffic fines may double if workers are present.

** Required CSJ Limit signing. See Note 10 on BC(1).

[*] Area for placement of "ROAD WORK AHEAD" sign and other signs or devices as called for on the Traffic Control Plan.

LEGEND

- Sign
- Channelizing Devices
- Type III Barricade
- X See Typical Construction Warning Sign Size and Spacing chart or the TMUTCD for sign spacing requirements.

STANDARD PLANS

Texas Department of Transportation
Traffic Operations Division

BARRICADE AND CONSTRUCTION
PROJECT LIMIT
STANDARD

BC(2)-07

©TxDOT REVISIONS	DN: TxDOT	CK: TxDOT	DW: TxDOT	CK: TxDOT
STATE DISTRICT	FEDERAL REGION 6	FEDERAL AID PROJECT		SHEET
COUNTY		CONTROL	SECTION	JOB
				HIGHWAY

T-INTERSECTION

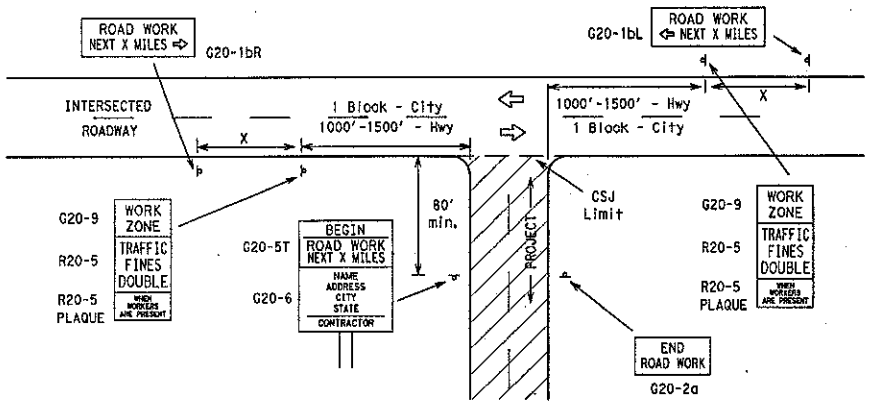

CSJ LIMITS AT T-INTERSECTION

1. The Engineer will determine the types and location of any additional traffic control devices, such as a flagger and accompanying signs, or other signs, that should be used when work is being performed at or near an intersection.
2. If construction closes the road at a T-intersection the Contractor shall place the G20-6 "Contractor Name" sign behind the Type III Barricades for the road closure (see BC(10) also). The G20-1bL and G20-1bR signs shall be replaced by the detour signing called for in the plans.

TYPICAL LOCATION OF CROSSROAD SIGNS

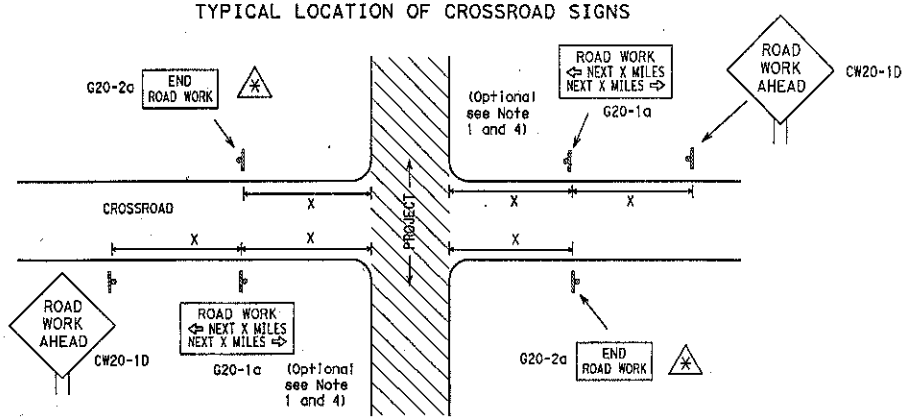

May be mounted on back of CW20-1D sign with approval of engineer. (See note 2 below)

1. The typical minimum signing on a crossroad approach should be a CW20-1D ROAD WORK AHEAD sign and a G20-2a END ROAD WORK sign, unless noted otherwise in plans.
2. The Engineer may use the reduced size 36" x 36" ROAD WORK AHEAD (CW20-1D) sign mounted back to back with the reduced size 36" x 18" END ROAD WORK (G20-2a) sign on low volume crossroads (see Note 4 under "Typical Construction Warning Sign Size and Spacing"). See the "Standard Highway Sign Designs for Texas" manual for sign details. The Engineer may omit the advance warning signs on low volume crossroads. The Engineer will determine whether a road is low volume. This information shall be shown in the plans.
3. Based on existing field conditions, the Engineer/Inspector may require additional signs such as FLAGGER AHEAD, LOOSE GRAVEL, or other appropriate signs. When additional signs are required, these signs will be considered part of the minimum requirements. The Engineer/Inspector will determine the proper location and spacing of any sign not shown on the BC sheets, Traffic Control Plan sheets or the Work Zone Standard Sheets.
4. The G20-1a sign shall be required at high volume crossroads to advise motorists of the length of construction in either direction from the intersection. The Engineer will determine whether a roadway is considered high volume.
5. Additional traffic control devices may be shown elsewhere in the plans for higher volume crossroads.
6. When work occurs in the intersection area, appropriate traffic control devices, as shown elsewhere in the plans or as determined by the Engineer/Inspector, shall be in place.

STANDARD PLANS

Texas Department of Transportation
Traffic Operations Division

BARRICADE AND CONSTRUCTION
PROJECT LIMIT
STANDARD

BC(2)-07

© TxDOT

DN: TxDOT	CK: TxDOT	DW: TxDOT	CK: TxDOT

FEDERAL AID PROJECT

STATE DISTRICT	FEDERAL REGION 6	COUNTY	CONTROL	SECTION	JOB	HIGHWAY

REVISIONS

SHEET

TYPICAL CONSTRUCTION WARNING SIGN SIZE AND SPACING [1,5,6]

SIZE

Sign Number or Series	Conventional Road	Expressway/ Freeway
CW20 [4], CW21, CW22, CW23, CW25	48" x 48"	48" x 48"
CW1, CW2, CW7, CW8, CW9, CW11, CW14	36" x 36"	48" x 48"
CW3, CW4, CW5, CW6, CW8-3, CW10, CW12	48" x 48"	48" x 48"

SPACING

Posted Speed	Sign Spacing "X" Δ
MPH	Feet (Apprx.)
30	120
35	160
40	240
45	320
50	400
55	500 [2]
60	600 [2]
65	700 [2]
70	800 [2]
75	900 [2]
80	1000 [2]
*	* [3]

* For typical sign spacings on divided highways, expressways and freeways, see Part 6 of the "Texas Manual on Uniform Traffic Control Devices" (TMUTCD) typical application diagrams or TCP Standard Sheets.

Δ Minimum distance from work area to first Advance Warning sign nearest the work area and/or distance between each additional sign.

General Notes:

1. Special or larger size signs may be used as necessary.
2. Distance between signs should be increased as required to have 1500 feet advance warning.
3. Distance between signs should be increased as required to have ½ mile or more advance warning.
4. 36" x 36" ROAD WORK AHEAD (CW20-1D) signs may be used on low volume crossroads at the discretion of the Engineer. See Note 2 under "Typical Location of Crossroad Signs".
5. Only diamond shaped warning sign sizes are indicated.
6. See sign size listing in "TMUTCD", Sign Appendix or the "Standard Highway Sign Designs for Texas" manual for complete list of available sign design sizes.

R20-3
Legend/Border - Black
Background - White

STANDARD PLANS
Texas Department of Transportation
Traffic Operations Division

BARRICADE AND CONSTRUCTION PROJECT LIMIT STANDARD

BC(2)-07

© TxDOT

DN: - TxDOT	CK: - TxDOT	DW: - TxDOT	CK: - TxDOT

REVISIONS	STATE DISTRICT	FEDERAL REGION	FEDERAL AID PROJECT	SHEET
		6		

COUNTY	CONTROL	SECTION	JOB	HIGHWAY

TYPICAL APPLICATION OF WORK ZONE SPEED LIMIT SIGNS

Work zone speed limits shall be regulatory, established in accordance with the "Procedures for Establishing Speed Zones," and approved by the Texas Transportation Commission, or by City Ordinance when within Incorporated City Limits.

Reduced speeds should only be posted in the vicinity of work activity and not throughout the entire project.

Regulatory work zone speed signs (R2-1) shall be removed or covered during periods when they are not needed.

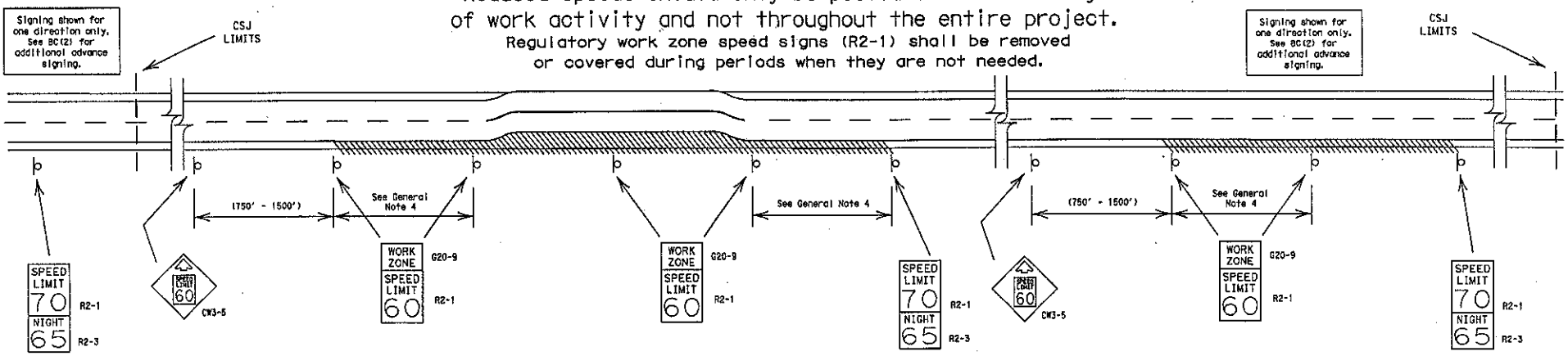

GUIDANCE FOR USE:

LONG/INTERMEDIATE TERM WORK ZONE SPEED LIMITS

This type of work zone speed limit should be included on the design of the traffic control plans when restricted geometrics with a lower design speed are present in the work zone and modification of the geometrics to a higher design speed is not feasible.

Long/Intermediate Term Work Zone Speed Limit signs, when approved as described above, should be posted and visible to the motorist when work activity is present. Work activity may also be defined as a change in the roadway that requires a reduced speed for motorists to safely negotiate the work area, including:

a) rough road or damaged pavement surface
b) substantial alteration of roadway geometrics (diversions)
c) construction detours
d) grade
e) width
f) other conditions readily apparent to the driver

As long as any of these conditions exist, the work zone speed limit signs should remain in place.

SHORT TERM WORK ZONE SPEED LIMITS

This type of work zone speed limit should be included on the design of the traffic control plans when workers or equipment are not behind concrete barrier, when work activity is within 15 feet of pavement edge or actually on the pavement.

Short Term Work Zone Speed Limit signs should be posted and visible to the motorists only when work activity is present. When work activity is not present, signs shall be removed or covered.
(See Removing or Covering on BC(4)).

GENERAL NOTES:

1. Regulatory work zone speed limits should be used only for sections of construction projects where speed control is of major importance.
2. Regulatory work zone speed limit signs shall be placed on supports at a 7 foot minimum mounting height.
3. Speed zone signs are illustrated for one direction of travel and are normally posted for each direction of travel.
4. Frequency of work zone speed limit signs should be:
   40 mph and greater 0.2 to 2 miles
   35 mph and less 0.2 to 1 mile
5. Regulatory speed limit signs shall have black legend and border on a white reflective background (See "Reflective Sheeting" on BC(4)).
6. Fabrication, erection and maintenance of the CW3-5 sign, G20-9 plaque and the R2-1 and R2-3 signs shall not be paid for directly, but shall be considered subsidiary to Item 502.
7. Turning signs from view, laying signs over or down will not be allowed, unless otherwise noted.
8. Techniques that may help reduce traffic speeds include but are not limited to:
   A. Law enforcement.
   B. Flagger stationed next to sign.
   C. Portable changeable message sign (PCMS).
   D. Low-power (drone) radar transmitter.
   E. Speed monitor trailers or signs.
9. Speeds shown on details above are for illustration only. Work Zone Speed Limits should only be posted as approved for each project.

STANDARD PLANS

Texas Department of Transportation
Traffic Operations Division

BARRICADE AND CONSTRUCTION
WORK ZONE SPEED LIMIT
STANDARD

BC(3)-07

© TxDOT

REVISIONS				
	DN: TxDOT	CK: TxDOT	DW: TxDOT	CK: TxDOT
STATE DISTRICT	FEDERAL REGION 6	FEDERAL AID PROJECT		SHEET
COUNTY	CONTROL	SECTION	JOB	HIGHWAY

TYPICAL MINIMUM CLEARANCES FOR LONG TERM AND INTERMEDIATE TERM SIGNS

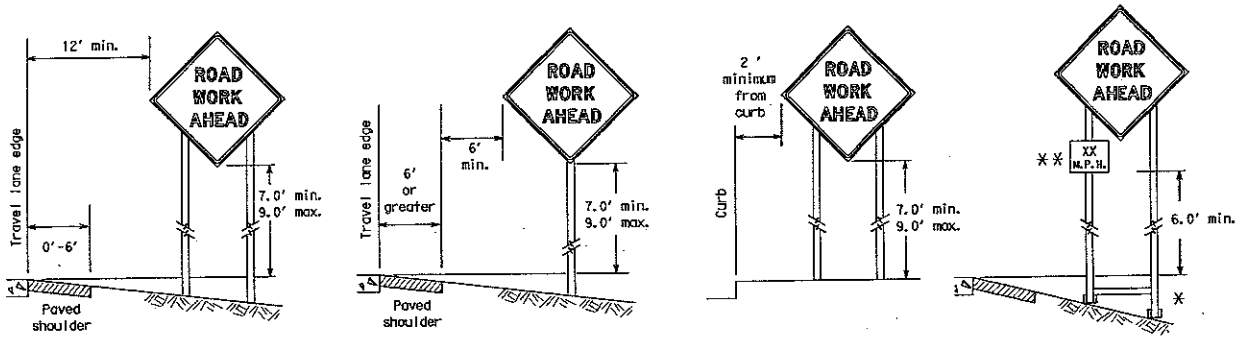

⁎ When placing skid supports on unlevel ground, the leg post lengths must be adjusted so the sign appears straight and plumb. Objects shall NOT be placed under skids as a means of leveling.

⁎⁎ When plaques are placed on dual-leg supports, they should be attached to the upright nearest the travel lane. Supplemental plaques (advisory or distance) should not cover the surface of the parent sign.

ATTACHMENT FOR SIGN SUPPORTS

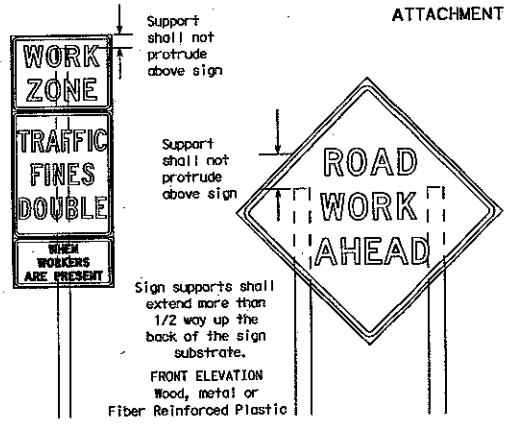

Splicing embedded perforated square metal tubing in order to extend post height will only be allowed when the splice is made using four bolts, two above and two below the spice point. Splice must be located entirely behind the sign substrate, not near the base of the support. Splice insert lengths should be at least 5 times nominal post size, centered on the splice and of at least the same guage material.

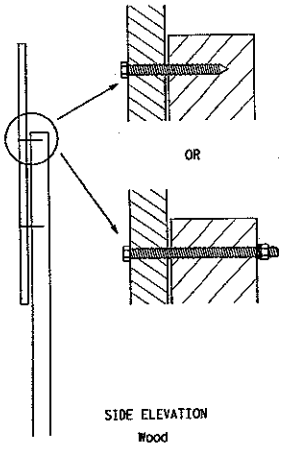

Attachment to wooden supports will be by bolts and nuts or screws. Use TxDOT's or manufacturer's recommended procedures for attaching sign substrates to other types of sign supports

Nails will NOT be allowed.

Each sign shall be attached directly to the sign support. Multiple signs shall not be joined or spliced by any means. Wood supports shall not be extended or repaired by splicing or other means.

STOP/SLOW PADDLES

1. STOP/SLOW paddles are the primary method to control traffic by flaggers. The STOP/SLOW paddle size should be 24" x 24" as detailed below.
2. When used at night, the STOP/SLOW paddle shall be retroreflectorized.
3. STOP/SLOW paddles may be attached to a staff with a minimum length of 6' to the bottom of the sign.
4. Any lights incorporated into the STOP or SLOW paddle faces shall only be as specifically described in Section 6E.03 Hand Signaling Devices in the TMUTCD.

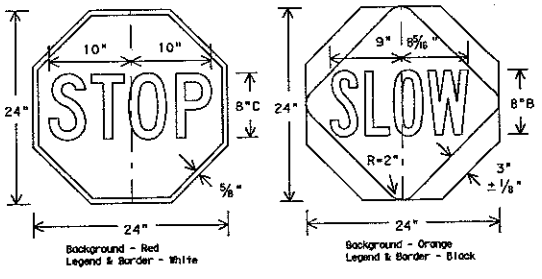

CONTRACTOR REQUIREMENTS FOR MAINTAINING PERMANENT SIGNS WITHIN THE PROJECT LIMITS

1. Permanent signs are used to give notice of traffic laws or regulations, call attention to conditions that are potentially hazardous to traffic operations, show route designations, destinations, directions, distances, services, points of interest, and other geographical, recreational, or cultural information. Drivers proceeding through a work zone need the same, if not better route guidance as normally installed on a roadway without construction.
2. When permanent regulatory or warning signs conflict with work zone conditions, remove or cover the permanent signs until the permanent sign message matches the roadway condition.
3. When existing permanent signs are moved and relocated due to construction purposes, they shall be visible to motorists at all times.
4. If existing signs are to be relocated on their original supports, they shall be installed on crashworthy bases as shown on the SMD Standard sheets. The signs shall meet the required mounting heights shown on the BC Sheets or the SMD Standards. This work should be paid for under the appropriate pay item for relocating existing signs.
5. If permanent signs are to be removed and relocated using temporary supports, the Contractor shall use crashworthy supports as shown on the BC sheets or the CWZTCD. The signs shall meet the required mounting heights shown on the BC Sheets or the SMD Standards during construction. This work should be paid for under the appropriate pay item for relocating existing signs.
6. Any sign or traffic control device that is struck or damaged by the Contractor or his/her construction equipment shall be replaced as soon as possible by the Contractor to ensure proper guidance for the motorists. This will be subsidiary to Item 502.

STANDARD PLANS
Texas Department of Transportation
Traffic Operations Division

BARRICADE AND CONSTRUCTION TEMPORARY SIGN NOTES STANDARD

BC(4)-07

© TxDOT	DN: - TxDOT	CK: - TxDOT	DW: - TxDOT	CK: - TxDOT
REVISIONS	STATE DISTRICT / FEDERAL REGION 6	FEDERAL AID PROJECT		SHEET
	COUNTY	CONTROL	SECTION / JOB	HIGHWAY

GENERAL NOTES FOR WORK ZONE SIGNS

1. Contractor shall install and maintain signs in a straight and plumb condition and/or as directed by the Engineer.
2. Wooden sign posts shall be painted white.
3. Barricades shall NOT be used as sign supports.
4. Nails shall NOT be used to attach signs to any support.
5. All signs shall be installed in accordance with the plans or as directed by the Engineer. Signs shall be used to regulate, warn, and guide the traveling public safely through the work zone.
6. The Contractor may furnish either the sign design shown in the plans or in the "Standard Highway Sign Designs for Texas" (SHSD). The Engineer/Inspector may require the Contractor to furnish other work zone signs that are shown in the TMUTCD but may have been omitted from the plans. Any variation in the plans shall be documented by written agreement between the Engineer and the Contractor's Responsible Person. All changes must be documented in writing before being implemented. This can include documenting the changes in the Inspector's TxDOT diary and having both the Inspector and Contractor initial and date the agreed upon changes.
7. The Contractor shall furnish sign supports listed in the "Compliant Work Zone Traffic Control Device List" (CWZTCD). The Contractor shall install the sign support in accordance with the manufacturer's recommendations. If there is a question regarding installation procedures, the Contractor shall furnish the Engineer a copy of the manufacturer's installation recommendations so the Engineer can verify the correct procedures are being followed.
8. The Contractor is responsible for installing signs on approved supports and replacing signs with damaged or cracked substrates and/or damaged or marred reflective sheeting as directed by the Engineer/Inspector.
9. Identification markings may be shown only on the back of the sign substrate. The maximum height of letters and/or company logos used for identification shall be 1 inch.
10. The Contractor shall replace damaged wood posts. New or damaged wood sign posts shall not be spliced.

DURATION OF WORK (as defined by the "Texas Manual on Uniform Traffic Control Devices" Part 6)

1. The types of sign supports, sign mounting height, the size of signs, and the type of sign substrates can vary based on the type of work being performed. The Engineer is responsible for selecting the appropriate size sign for the type of work being performed. The Contractor is responsible for ensuring the sign support, sign mounting height and substrate meets manufacturer's recommendations in regard to crashworthiness and duration of work requirements.
   a. Long-term stationary - work that occupies a location more than 3 days.
   b. Intermediate-term stationary - work that occupies a location more than one daylight period up to 3 days, or nighttime work lasting more than one hour.
   c. Short-term stationary - daytime work that occupies a location for more than 1 hour in a single daylight period.
   d. Short, duration - work that occupies a location up to 1 hour.
   e. Mobile - work that moves continuously or intermittently (stopping for up to approximately 15 minutes.)

SIGN MOUNTING HEIGHT

1. The bottom of Long-term/Intermediate-term signs shall be at least 7 feet, but not more than 9 feet, above the paved surface, except as shown for supplemental plaques mounted below other signs.
2. The bottom of Short-term/Short Duration signs shall be a minimum of 1 foot above the pavement surface but no more than 2 feet above the ground.
3. Long-term/Intermediate-term Signs may be used in lieu of Short-term/Short Duration signing.
4. Short-term/Short Duration signs shall be used only during daylight and shall be removed at the end of the workday. or raised to appropriate Long-term/Intermediate sign height.
5. Regulatory signs shall be mounted at least 7 feet, but not more than 9 feet, above the paved surface regardless of work duration.

SIZE OF SIGNS

1. The Engineer may allow the use of smaller size construction warning signs on secondary roads or city streets where speeds are low if the sign size is listed as an option on the "Typical Construction Warning Sign Size and Spacing" chart shown on BC(2).
2. The Contractor shall furnish the sign sizes shown in plans, the BC Sheets, the TCP sheets or as directed by the Engineer.

SIGN SUBSTRATES

1. The Contractor shall ensure the sign substrate is installed in accordance with the manufacturer's recommendations for the type of sign support that is being used. The CWZTCD lists each substrate that can be used on the different types and models of sign supports.
2. "Mesh" type materials are NOT an approved sign substrate, regardless of the tightness of the weave.
3. All wooden individual sign panels fabricated from 2 or more pieces shall have one or more plywood cleat, 1/2" thick by 6" wide, fastened to the back of the sign and extending fully across the sign. The cleat shall be attached to the back of the sign using wood screws that do not penetrate the face of the sign panel. The screws shall be placed on both sides of the splice and spaced at 6" centers. The Engineer may approve other methods of splicing the sign face.

REFLECTIVE SHEETING

1. All signs shall be retroreflective and constructed of sheeting meeting the color and retro-reflectivity requirements of DMS-8300 for rigid signs or DMS-8310 for roll-up signs. The web address for DMS specifications is shown on BC(1).
2. White sheeting, meeting the requirements of DMS-8300 Type C (High Specific Intensity), shall be used for signs with a white background.
3. Orange sheeting, meeting the requirements of DMS-8300 Type E (Fluorescent Prismatic), shall be used for rigid signs with orange backgrounds.

SIGN LETTERS

1. All sign letters and numbers shall be clear, and open rounded type uppercase alphabet letters as approved by the Federal Highway Administration (FHWA) and as published in the "Standard Highway Sign Design for Texas" manual. Signs, letters and numbers shall be of first class workmanship in accordance with Department Standards and Specifications.

REMOVING OR COVERING

1. When sign messages may be confusing or do not apply, the signs shall be removed or completely covered.
2. Long-term stationary or intermediate stationary signs installed on square metal tubing may be turned away from traffic 90 degrees when the sign message is not applicable. This type of sign support meets the crashworthiness standards regardless of the direction of impact. This technique may not be used for signs installed in the median of divided highways or near any intersections where the sign may be seen from approaching traffic.
3. Signs installed on wooden skids shall not be turned at 90 degree angles to the roadway. These signs should be removed or completely covered when not required.
4. When signs are covered, the material used shall be opaque, such as heavy mil black plastic, or other materials which will cover the entire sign face and maintain their opaque properties under automobile headlights at night, without damaging the sign sheeting.
5. Burlap shall NOT be used to cover signs.
6. Duct tape or other adhesive material shall NOT be affixed to a sign face. These materials can damage the retroreflectivity of sheeting.
7. Signs and anchor stubs shall be removed and holes backfilled upon completion of work.

SIGN SUPPORT WEIGHTS

1. Where sign supports require the use of weights to keep from turning over, the use of sandbags with dry, cohesionless sand is recommended.
2. The sandbags will be tied shut to keep the sand from spilling and to maintain a constant weight.
3. Rock, concrete, iron, steel or other solid objects shall not be permitted for use as sign support weights.
4. Sandbags should weigh a minimum of 35 lbs and a maximum of 50 lbs.
5. Sandbags shall be made of a durable material that tears upon vehicular impact.
6. Rubber (such as tire inner tubes) shall NOT be used for sandbags.
7. Rubber ballasts designed for channelizing devices should not be used for ballast on portable sign supports. Sign supports designed and manufactured with rubber bases may be used when shown on the CWZTCD list.
8. Sandbags shall only be placed along or laid over the base supports of the traffic control device and shall not be suspended above ground level or hung with rope, wire, chains or other fasteners. Sandbags shall be placed along the length of the skids to weigh down the sign support.
9. Sandbags shall NOT be placed under the skid and shall not be used to level sign supports placed on slopes.

STANDARD PLANS
Texas Department of Transportation
Traffic Operations Division
BARRICADE AND CONSTRUCTION
TEMPORARY SIGN NOTES
STANDARD

©TxDOT DN: - TxDOT CK: - TxDOT DW: - TxDOT CK: - TxDOT

REVISIONS	STATE DISTRICT	FEDERAL REGION	FEDERAL AID PROJECT	SHEET
		6		
	COUNTY		CONTROL / SECTION / JOB	HIGHWAY

GENERAL NOTES

1. Nails may be used in the assembly of wooden sign supports, but 3/8" bolts with nuts or 3/8" x 3 1/2" lag screws must be used on every joint for final connection.

2. More details of approved Long/ Intermediate and Short Term supports can be found on the CWZTCD list. See BC(1) for website location.

3. No more than 2 sign posts shall be placed within a 7 ft. circle, except for specific materials noted on the CWZTCD List.

4. When project is completed, all sign supports and foundations shall be removed from the project site. This will be considered subsidiary to Item 502.

SKID MOUNTED WOOD SIGN SUPPORTS

LONG/INTERMEDIATE TERM STATIONARY - PORTABLE SKID MOUNTED SIGN SUPPORTS □

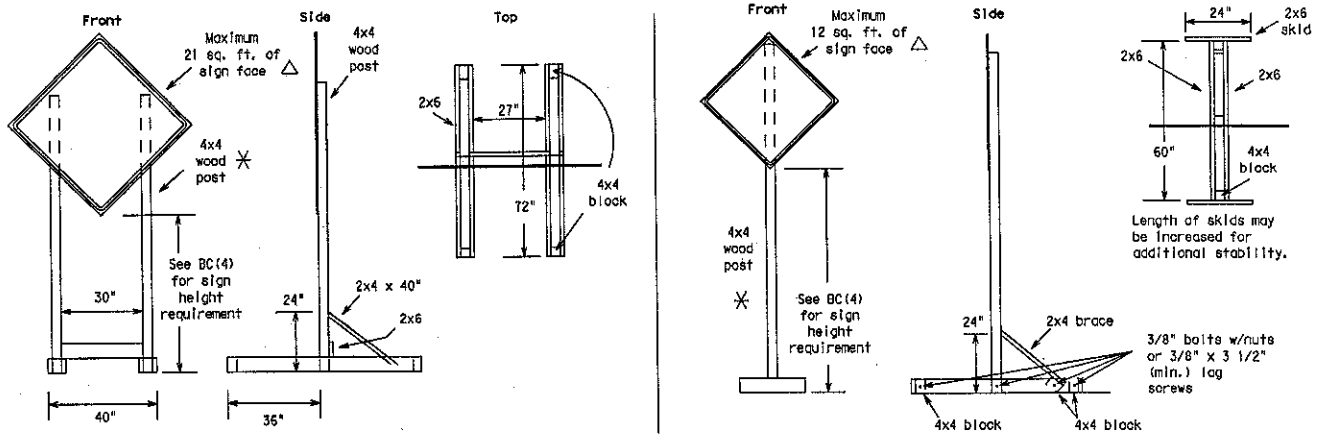

□ See BC(4) for definition of "Work Duration."

△ See the CWZTCD for the type of sign substrate that can be used for each approved sign support.

SKID MOUNTED PERFORATED SQUARE STEEL TUBING SIGN SUPPORTS

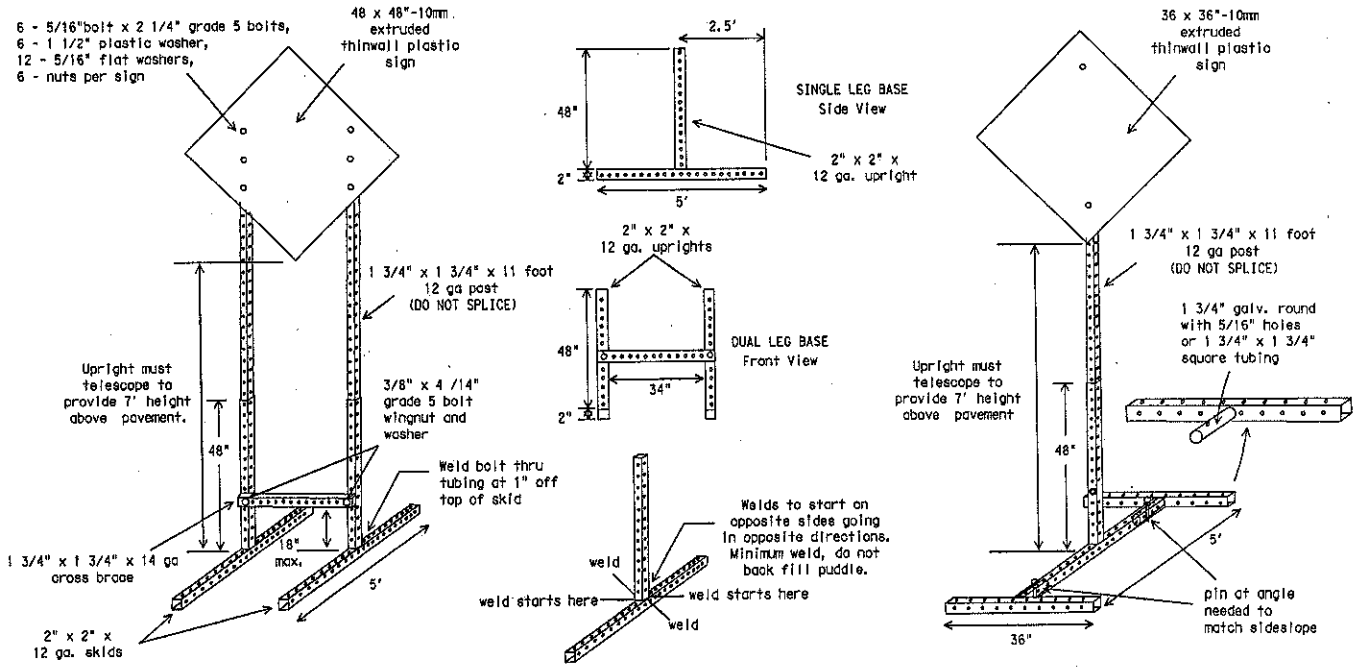

STANDARD PLANS

Texas Department of Transportation
Traffic Operations Division

BARRICADE AND CONSTRUCTION
TYPICAL SIGN SUPPORT
STANDARD

BC(5)-07

© TxDOT

DN: TxDOT CK: TxDOT DW: TxDOT CK: TxDOT

FEDERAL AID PROJECT

STATE DISTRICT | FEDERAL REGION 6 | COUNTY | CONTROL | SECTION | JOB | HIGHWAY | SHEET

REVISIONS

GENERAL NOTES

1. Nails may be used in the assembly of wooden sign supports, but 3/8" bolts with nuts or 3/8" x 3 1/2" lag screws must be used on every joint for final connection.

2. More details of approved Long/Intermediate and Short Term supports can be found on the CWZTCD list. See BC(1) for website location.

3. No more than 2 sign posts shall be placed within a 7 ft. circle, except for specific materials noted on the CWZTCD List.

4. When project is completed, all sign supports and foundations shall be removed from the project site. This will be considered subsidiary to Item 502.

GROUND MOUNTED SIGN SUPPORTS

Refer to the CWZTCD and the manufacturer's installation procedure for each type sign support. The maximum sign square footage shall adhere to the manufacturer's recommendation. Two post installations can be used for larger signs.

PERFORATED SQUARE METAL TUBING

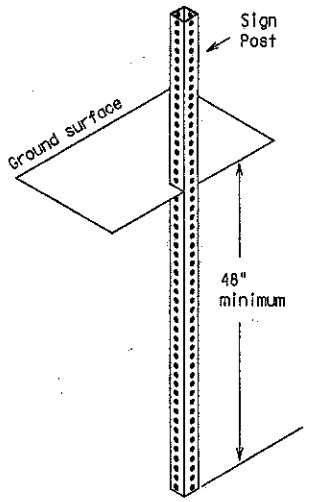

OPTION 1
(Direct Embedment)

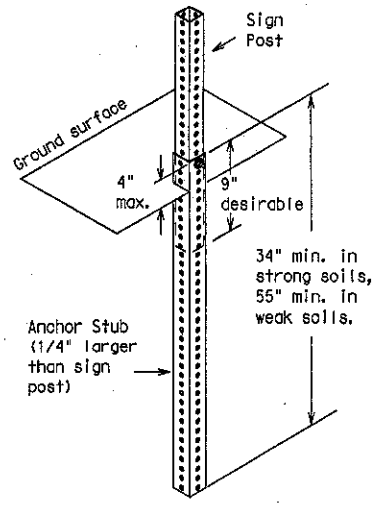

OPTION 2
(Anchor Stub)

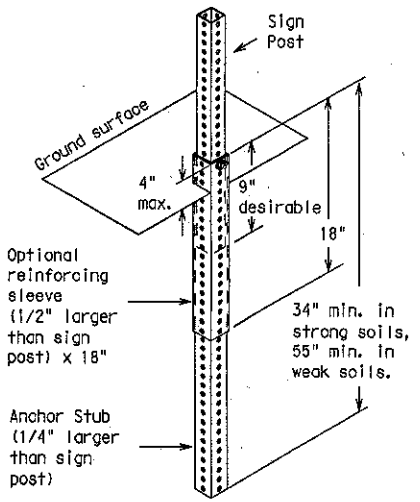

OPTION 3
(Anchor Stub and Reinforcing Sleeve))

WEDGE ANCHORS

Both steel and plastic Wedge Anchor Systems as shown on the SMD Standard Sheets may be used as temporary sign supports for signs up to 10 square feet of sign face. They may be set in concrete or in sturdy soils if approved by the Engineer. (See web address for "Traffic Engineering Standard Sheets" on BC(1)).

WING CHANNEL

Lap-splice/base bolted anchor

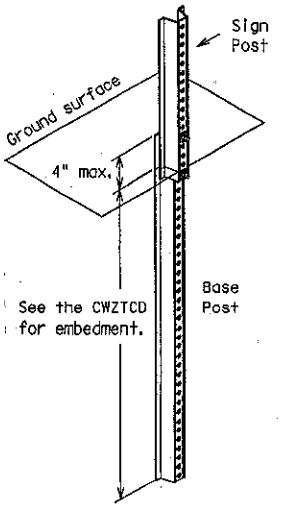

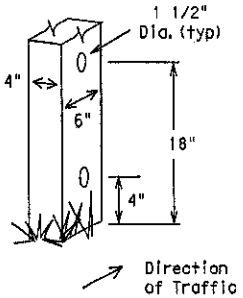

WOOD POST SYSTEM FOR GROUND MOUNTED SIGN SUPPORTS

Nominal Post Size	No. of Posts	Maximum Sq. feet of Sign Face	Minimum Soil Embedment	Drilled Hole(s) Required
4 x 4	1	12	36"	NO
4 x 4	2	21	36"	NO
4 x 6	1	21	36"	YES
4 x 6	2	36	36"	YES

Wood sign posts MUST be one piece. Splicing will NOT be allowed. Posts shall be painted white.

STANDARD PLANS
Texas Department of Transportation
BARRICADE AND CONSTRUCTION
TYPICAL SIGN SUPPORT
STANDARD
BC(5)-07

© TxDOT

DWN - TxDOT | CKD - TxDOT | DWN - TxDOT | CKD - TxDOT

FEDERAL AID PROJECT | SHEET

REVISIONS | STATE DISTRICT | FEDERAL REGION 6 | COUNTY | CONTROL | SECTION | JOB | HIGHWAY

PORTABLE CHANGEABLE MESSAGE SIGNS

1. The Engineer/Inspector shall approve all messages used on portable changeable message signs (PCMS).
2. Messages on PCMS should contain no more than 8 words (about four to eight characters per word), not including simple words such as "TO," "FOR," "AT," etc.
3. Messages should consist of a single phase, or two phases that alternate. Three-phase messages are not allowed. Each phase of the message should convey a single thought, and must be understood by itself.
4. Use the word "EXIT" to refer to an exit ramp on a freeway; i.e., "EXIT CLOSED." Do not use the term "RAMP."
5. Always use the route or interstate designation (IH, US, SH, FM) along with the number when referring to a roadway.
6. When in use the bottom of a stationary PCMS message panel should be a minimum 7 feet above the roadway, where possible.
7. The message term "WEEKEND" should be used only if the work is to start on Saturday morning and end by Sunday evening at midnight. Actual days and hours of work should be displayed on the PCMS if work is to begin on Friday evening and/or continue into Monday morning.
8. The Engineer/Inspector may select one of two options which are available for displaying a two-phase message on a PCMS. Each phase may be displayed for either four seconds each or for three seconds each.
9. Do not "flash" messages or words included in a message. The message should be steady burn or continuous while displayed.
10. Do not present redundant information on a two-phase message; i.e., keeping two lines of the message the same and changing the third line.
11. Do not use the word "Danger" in message.
12. Do not display the message "LANES SHIFT LEFT" or "LANES SHIFT RIGHT" on a PCMS. Drivers do not understand the message.
13. Do not display messages that scroll horizontally or vertically across the face of the sign.
14. The following table lists abbreviated words and two-word phrases that are acceptable for use on a PCMS. Both words in a phrase must be displayed together. Words or phrases not on this list should not be abbreviated.
15. PCMS character height should be at least 18 inches for trailer mounted units. They should be visible from at least 1/2 (.5) mile and the text should be legible from at least 720 feet. Truck mounted units must have a character height of 10 inches and must be legible from at least 400 feet.
16. Each line of text should be centered on the message board rather than left or right justified.
17. If disabled, the PCMS should default to an illegible display that will not alarm motorists and will only be used to alert workers that the PCMS has malfunctioned. A pattern such as a series of horizontal solid bars is appropriate.

Word or Phrase	Abb.	Word or Phrase	Abb.
Access Road	ACCS RD	Major	MAJ
Air Quality	AIR QLTY	Miles	MI
Alternate	ALT	Miles Per Hour	MPH
Avenue	AVE	Minor	MNR
Best Route	BEST RTE	Monday	MON
Boulevard	BLVD	Normal	NORM
Bridge	BRDG	North	N
Cannot	CANT	Northbound	(route) N
Center	CNTR	Parking	PKING
Construction Ahead	CONST AHEAD	Parking Lot	PRK LOT
Detour Route	DETOUR RTE	Road	RD
Do Not	DONT	Right Lane	RGT LN
East	E	Saturday	SAT
Eastbound	(route) E	Service Road	SERV RD
Emergency	EMER	Shoulder	SHLDR
Emergency Vehicle	EMER VEH	Slippery	SLIP
Entrance, Enter	ENT	South	S
Express Lanes	EXP LANE	Southbound	(route) S
Expressway	EXPWY	Speed	SPD
XXXX Feet	XXXX FT	Street	ST
Fog Ahead	FOG AHD	Sunday	SUN
Freeway	FRWY, FWY	Telephone	PHONE
Freeway Blocked	FWY BLKD	Temporary	TEMP
Friday	FRI	Thursday	THURS
Hazardous Driving	HAZ DRIVING	To Downtown	TO DWNTN
Hazardous Material	HAZMAT	Traffic	TRAF
High-Occupancy Vehicle	HOV	Travelers	TRVLRS
Highway	HWY	Tuesday	TUES
Hours	HR	Time Minutes	TIME MIN
Information	INFO	Upper Level	UPPR LVL
It Is	ITS	Vehicle	VEH
Junction	JCT	Warning	WARN
Left	LFT	Wednesday	WED
Left Lane	LFT LN	Weight Limit	WT LIMIT
Lane Closed	LN CLSD	West	W
Lower Level	LOWR LVL	Westbound	(route) W
Maintenance	MAINT	Wet Pavement	WET PVMT
		Will Not	WONT

Roadway designation # IH-number, US-number, SH-number, FM-number

WHEN NOT IN USE, REMOVE THE PCMS FROM THE RIGHT-OF-WAY OR PLACE THE PCMS BEHIND BARRIER OR GUARDRAIL WITH SIGN PANEL TURNED PARALLEL TO TRAFFIC

PCMS SIGNS WITHIN THE R.O.W. SHALL BE BEHIND GUARDRAIL OR CONCRETE BARRIER OR SHALL HAVE A MINIMUM OF FOUR (4) PLASTIC DRUMS PLACED PERPENDICULAR TO TRAFFIC ON THE UPSTREAM SIDE OF THE PCMS.

FULL MATRIX PCMS SIGNS

1. When Full Matrix PCMS signs are used, the character height and legibility/visibility requirements shall be maintained as listed in Note 15 under "PORTABLE CHANGEABLE MESSAGE SIGNS" above.
2. When symbol signs, such as the CW20-7a Flagger Symbol, are represented graphically on the Full Matrix PCMS sign and, with the approval of the Engineer, it shall maintain the legibility/visibility requirement listed above.
3. When symbol signs are represented graphically on the Full Matrix PCMS, they shall only supplement the use of the static sign represented, and shall not substitute for, or replace that sign.
4. A full matrix PCMS may be used to simulate a flashing arrow panel provided it meets the visibility, flash rate and dimming requirements on BC(7), for the same size arrow.

STANDARD PLANS

Texas Department of Transportation
Traffic Operations Division

BARRICADE AND CONSTRUCTION
PORTABLE CHANGEABLE
MESSAGE SIGN (PCMS)
STANDARD

BC(6)-07

10 of 27

©TxDOT	DN: TxDOT	CK: TxDOT	DW: TxDOT	CK: TxDOT
REVISIONS	FEDERAL AID PROJECT	SHEET
07/01/07	FEDERAL REGION 6					
COUNTY	CONTROL	SECTION	JOB	HIGHWAY

RECOMMENDED PHASES AND FORMATS FOR PCMS MESSAGES DURING ROADWORK ACTIVITIES

(The Engineer may approve other messages not specifically covered here.)

Phase 1: Condition Lists

Road/Lane/Ramp Closure List

FREEWAY CLOSED X MILE	FRONTAGE ROAD CLOSED
ROAD CLOSED AT SH XXX	SHOULDER CLOSED XXX FT
ROAD CLSD AT FM XXXX	RIGHT LN CLOSED XXX FT
RIGHT X LANES CLOSED	RIGHT X LANES OPEN
CENTER LANE CLOSED	DAYTIME LANE CLOSURES
NIGHT LANE CLOSURES	I-XX SOUTH EXIT CLOSED
VARIOUS LANES CLOSED	EXIT XXX CLOSED X MILE
EXIT CLOSED	RIGHT LN TO BE CLOSED
MALL DRIVEWAY CLOSED	X LANES CLOSED TUE - FRI
XXXXXXXX BLVD CLOSED	

Other Condition List

ROADWORK XXX FT	ROAD REPAIRS XXXX FT
FLAGGER XXXX FT	LANE NARROWS XXXX FT
RIGHT LN NARROWS XXXX FT	TWO-WAY TRAFFIC XX MILE
MERGING TRAFFIC XXXX FT	CONST TRAFFIC XXX FT
LOOSE GRAVEL XXXX FT	UNEVEN LANES XXXX FT
DETOUR X MILE	ROUGH ROAD XXXX FT
ROADWORK PAST SH XXXX	ROADWORK NEXT FRI-SUN
BUMP XXXX FT	US XXX EXIT X MILES
TRAFFIC SIGNAL XXXX FT	LANES SHIFT *

* LANES SHIFT in Phase 1 must be used with STAY IN LANE in Phase 2.

Phase 2: Possible Component Lists

Action to Take/Effect on Travel List

MERGE RIGHT	FORM X LINES RIGHT
DETOUR NEXT X EXITS	USE XXXXX RD EXIT
USE EXIT XXX	USE EXIT I-XX NORTH
STAY ON US XXX SOUTH	USE I-XX E TO I-XX N
TRUCKS USE US XXX N	WATCH FOR TRUCKS
WATCH FOR TRUCKS	EXPECT DELAYS
EXPECT DELAYS	PREPARE TO STOP
REDUCE SPEED XXX FT	END SHOULDER USE
USE OTHER ROUTES	WATCH FOR WORKERS
STAY IN LANE *	

Location List

AT FM XXXX
BEFORE RAILROAD CROSSING
NEXT X MILES
PAST US XXX EXIT
XXXXXXX TO XXXXXXX
US XXX TO FM XXXX

Warning List

SPEED LIMIT XX MPH
MAXIMUM SPEED XX MPH
MINIMUM SPEED XX MPH
ADVISORY SPEED XX MPH
RIGHT LANE EXIT
USE CAUTION
DRIVE SAFELY
DRIVE WITH CARE

** Advance Notice List

TUE-FRI XX AM-X PM
APR XX-XX X PM-X AM
BEGINS MONDAY
BEGINS MAY XX
MAY X-X XX PM - XX AM
NEXT FRI-SUN
XX AM TO XX PM
NEXT TUE AUG XX
TONIGHT XX PM-XX AM

** See Application Guidelines Note 6.

Application Guidelines

1. Only 1 or 2 phases are to be used on a PCMS.
2. The 1st phase (or both) should be selected from the "Road/Lane/Ramp Closure List" and the "Other Condition List".
3. A 2nd phase can be selected from the "Action to Take/Effect on Travel, Location, General Warning, or Advance Notice Phase Lists".
4. A Location Phase is necessary only if a distance or location is not included in the first phase selected.
5. If two PCMS are used in sequence, they must be separated by a minimum of 1000 ft. Each PCMS shall be limted to two phases, and should be understandable by themselves.
6. For advance notice, when the current date is within seven days of the actual work date, calendar days should be replaced with days of the week. Advance notification should typically be for no more than one week prior to the work

Wording Alternatives

1. The words RIGHT, LEFT and ALL can be interchanged as appropriate.
2. Roadway designations IH, US, SH, FM and LP can be interchanged as appropriate.
3. EAST, WEST, NORTH and SOUTH (or abbreviations E, W, N and S) can be interchanged as appropriate.
4. Highway names and numbers replaced as appropriate.
5. ROAD, HIGHWAY and FREEWAY can be interchanged as needed.
6. AHEAD may be used instead of distances if necessary.
7. FT and MI, MILE and MILES interchanged as appropriate.
8. AT, BEFORE and PAST interchanged as needed.
9. Distances or AHEAD can be eliminated from the message if a location phase is used.

STANDARD PLANS

Texas Department of Transportation
Traffic Operations Division

BARRICADE AND CONSTRUCTION
PORTABLE CHANGEABLE
MESSAGE SIGN (PCMS)
STANDARD

BC(6)-07

© TxDOT

REVISIONS	STATE DISTRICT	FEDERAL PROGRAM	DWN - TxDOT	CKD - TxDOT	DWN - TxDOT	CKD - TxDOT
	6	FEDERAL AID PROJECT				SHEET
	COUNTY	CONTROL	SECTION	JOB	HIGHWAY	

BARRIER REFLECTORS FOR CONCRETE TRAFFIC BARRIER AND ATTENUATORS

LOW PROFILE CONCRETE BARRIER (LPCB)

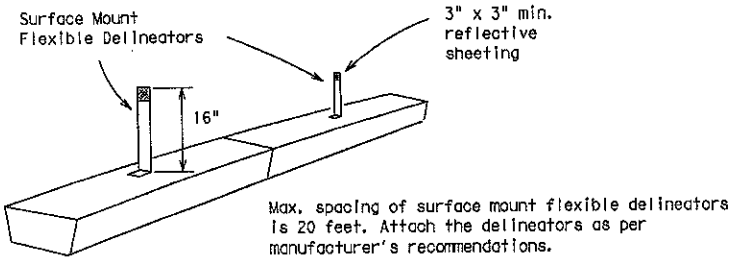

DELINEATION OF END TREATMENTS

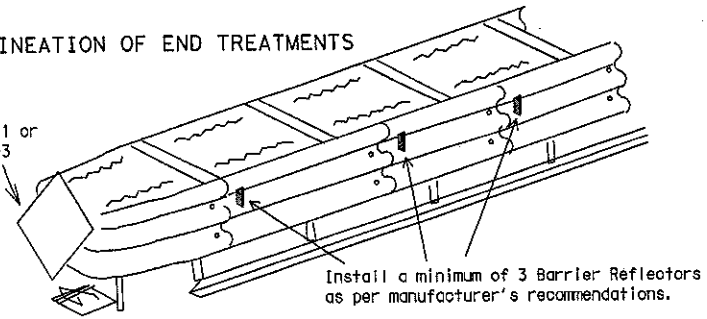

	APPROACHING TRAFFIC	
	BOTH SIDES	ONE SIDE
DELINEATION	OM-1	OM-3 or Vertical Panel

END TREATMENTS FOR CTB'S USED IN WORK ZONES

End treatments used on CTB's in work zones shall meet crashworthy standards as defined in the National Cooperative Highway Research Report 350. Refer to the CWZTCD List for approved end treatments and manufacturers.

1. Barrier Reflectors shall be prequalified, and conform to the color and reflectivity requirements of DMS-8600. A list of prequalified Barrier Reflectors (Type C Delineators) can be found at the Material Producer List web address shown on BC(1).
2. Color of Barrier Reflectors shall be as specified in the TMUTCD. The cost of the reflectors shall be considered subsidiary to Item 502.

CONCRETE TRAFFIC BARRIER (CTB)

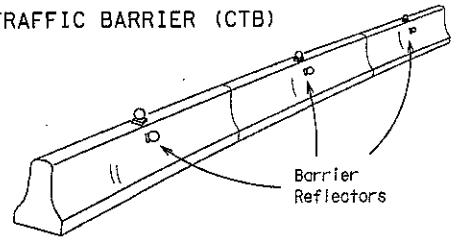

3. Where traffic is on one side of the CTB, two (2) Barrier Reflectors shall be mounted in approximately the midsection of each section of CTB. An alternate mounting location is uniformly spaced at one end of each CTB. This will allow for attachment of a barrier grapple without damaging the reflector. The Barrier Reflector mounted on the side of the CTB shall be located directly below the reflector mounted on top of the barrier, as shown in the detail above.
4. Where CTB separates two-way traffic, three barrier reflectors shall be mounted on each section of CTB. The reflector unit on top shall have two yellow reflective faces (Bi-Directional)while the reflectors on each side of the barrier shall have one yellow reflective face, as shown in the detail above.
5. When CTB separates traffic traveling in the same direction, no barrier reflectors will be required on top of the CTB.
6. Barrier Reflector units shall be yellow or white in color to match the edgeline being supplemented. Yellow Barrier Reflectors shall be made with Type E Fluorescent Prismatic Yellow Retroreflective Sheeting. White reflectors shall be made with Type D White Prismatic sheeting.
7. Maximum spacing of Barrier Reflectors is forty (40) feet.
8. Pavement markers or temporary flexible-reflective roadway marker tabs shall NOT be used as CTB delineation.
9. Attachment of Barrier Reflectors to CTB shall be per manufacturer's recommendations.
10. Missing or damaged Barrier Reflectors shall be replaced as directed by the Engineer.
11. Single slope barriers shall be delineated as shown on the above detail.

STANDARD PLANS
Texas Department of Transportation
Traffic Operations Division
BARRICADE AND CONSTRUCTION
BARRIER REFLECTOR
STANDARD

BC(7)-07

©TxDOT	DN: TxDOT	CK: TxDOT	DW: TxDOT	CK: TxDOT
REVISIONS	STATE DISTRICT	FEDERAL REGION 6	FEDERAL AID PROJECT	SHEET
	COUNTY	CONTROL	SECTION	JOB
				HIGHWAY

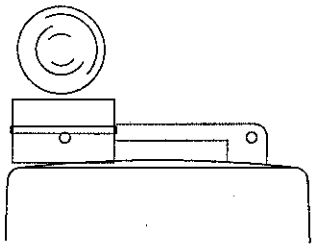

Type C Warning Light or approved substitute mounted adjacent to the travel way.

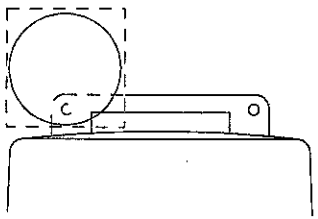

Warning reflector may be round or square. Must have a reflective surface area of at least 30 square inches

WARNING LIGHTS

1. Warning lights shall meet the requirements of the TMUTCD.
2. Warning lights shall NOT be installed on barricades.
3. Type A-Low Intensity Flashing Warning Lights are commonly used with drums. They are intended to warn of or mark a potentially hazardous area. Their use shall be as indicated on this sheet and/or other sheets of the plans by the designation "FL". The Type A Warning Lights shall not be used with signs manufactured with Type E Sheeting (Fluorescent Prismatic) meeting the requirements of Departmental Material Specification DMS-8300.
4. Type-C and Type D 360 degree Steady Burn Lights are intended to be used in a series for delineation to supplement other traffic control devices. Their use shall be as indicated on this sheet and/or other sheets of the plans by the designation "SB".
5. The Engineer/Inspector or the plans shall specify the location and type of warning lights to be installed on the traffic control devices.
6. When required by the Engineer, the Contractor shall furnish a copy of the warning lights certification. The warning light manufacturer will certify the warning lights meet the requirements of the latest ITE Purchase Specifications for Flashing and Steady-Burn Warning Lights.
7. When used to delineate curves, Type-C and Type D Steady Burn Lights should only be placed on the outside of the curve, not the inside.

WARNING LIGHTS MOUNTED ON PLASTIC DRUMS

1. Type A flashing warning lights are intended to warn drivers that they are approaching or are in a potentially hazardous area.
2. Type A random flashing warning lights are not intended for delineation and shall not be used in a series.
3. A series of sequential flashing warning lights placed on channelizing devices to form a merging taper may be used for delineation. If used, the successive flashing of the sequential warning lights should occur from the beginning of the taper to the end of the merging taper in order to identify the desired vehicle path. The rate of flashing for each light shall be 65 flashes per minute, plus or minus 10 flashes.
4. Type C and D steady-burn warning lights are intended to be used in a series to delineate the edge of the travel lane on detours, on lane changes, on lane closures, and on other similar conditions.
5. Type A, Type C and Type D warning lights shall be installed at locations as detailed on other sheets in the plans.
6. Warning lights shall not be installed on a drum that has a sign, chevron or vertical panel.
7. The maximum spacing for warning lights on drums should be identical to the channelizing device spacing.

WARNING REFLECTORS MOUNTED ON PLASTIC DRUMS AS A SUBSTITUTE FOR TYPE C (STEADY BURN) WARNING LIGHTS

1. A warning reflector or approved substitute may be mounted on a plastic drum as a substitute for a Type C, steady burn warning light at the discretion of the Contractor unless otherwise noted in the plans.
2. The warning reflector shall be yellow in color and shall be manufactured using a sign substrate approved for use with plastic drums listed on the CWZTCD.
3. The warning reflector shall have a minimum retroreflective surface area (one-side) of 30 square inches.
4. Round reflectors shall be fully reflectorized, including the area where attached to the drum.
5. Square substrates must have a minimum of 30 square inches of reflectorized sheeting. They do not have to be reflectorized where it attaches to the drum.
6. The side of the warning reflector facing approaching traffic shall have sheeting meeting the color and retroreflectivity requirements for DMS 8300-Type D (Non-fluorescent Prismatic).
7. When used near two-way traffic, both sides of the warning reflector shall be reflectorized.
8. The warning reflector should be mounted on the side of the handle nearest approaching traffic.
9. The maximum spacing for warning reflectors should be identical to the channelizing device spacing requirements.

TRUCK-MOUNTED ATTENUATORS

1. Truck-mounted attenuators (TMA) used on TxDOT facilities must meet the requirements outlined in the National Cooperative Highway Research Report No. 350 (NCHRP 350).
2. Refer to the CWZTCD for the requirements of Level 2 or Level 3 TMAs.
3. Refer to the dates shown in the CWZTCD to ensure that the TMA meets the age requirements and the crashworthiness criteria established by the Federal Highway Administration (FHWA) for TMAs.
4. Refer to the CWZTCD for a list of approved TMAs.
5. TMAs are required on freeways unless otherwise noted in the plans.
6. A TMA should be used anytime that it can be positioned approximately 30 to 100 feet in advance of the area of crew exposure without adversely affecting the work performance.
7. The only reason a TMA should not be required is when a work area is spread down the roadway and the work crew is an extended distance from the TMA.

STANDARD PLANS
Texas Department of Transportation
Traffic Operations Division

BARRICADE AND CONSTRUCTION
WARNING LIGHTS & ATTENUATOR
STANDARD

BC(7)-07

© TxDOT

DN: TxDOT | CK: TxDOT | DW: TxDOT | CK: TxDOT

FEDERAL AID PROJECT

STATE DISTRICT | FEDERAL REGION 6 | COUNTY | CONTROL | SECTION | JOB | HIGHWAY | SHEET

REVISIONS

TYPICAL FLASHING ARROW PANEL

Arrow Panels may be located behind channelizing devices in place for a shoulder taper or merging taper, otherwise they shall be delineated with four (4) channelizing devices placed perpendicular to traffic on the upstream side of traffic.

1. The Flashing Arrow Panel should be used for all lane closures on multi-lane roadways, or slow moving maintenance or construction activities on the travel lanes.
2. Flashing Arrow Panels should not be used on two-lane, two-way roadways, detours, diversions or work on shoulders unless the "CAUTION" display (see detail below) is used.
3. The Engineer/Inspector shall choose all appropriate signs, barricades and/or other traffic control devices that should be used in conjunction with the Flashing Arrow Panel.
4. The Flashing Arrow Panel should be able to display the following symbols:

Flashing RIGHT (LEFT) ARROW

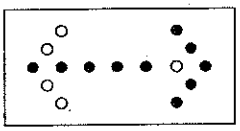

Flashing DOUBLE ARROW

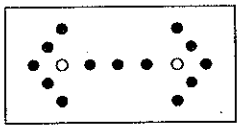

Flashing CAUTION

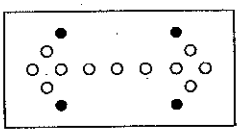

5. The "CAUTION" display consists of four corner lamps flashing simultaneously.
6. The straight line caution display is NOT ALLOWED.
7. The Flashing Arrow Panel shall be capable of minimum 50 percent dimming from rated lamp voltage. The flashing rate of the lamps shall not be less than 25 nor more than 40 flashes per minute.
8. Minimum lamp "on time" shall be approximately 50 percent for the flashing arrow and equal intervals of 25 percent for each sequential phase of the flashing chevron.
9. The sequential arrow display is NOT ALLOWED.
10. The flashing arrow display is the TxDOT standard; however, the sequential Chevron display may be used during daylight operations.

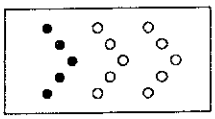

Sequential Chevron

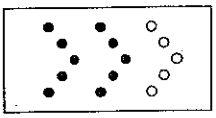

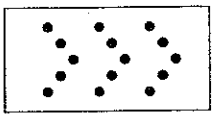

REQUIREMENTS

TYPE	MINIMUM SIZE	MINIMUM NUMBER OF PANEL LAMPS	MINIMUM VISIBILITY DISTANCE
B	30 x 60	13	3/4 mile
C	48 x 96	15	1 mile

ATTENTION: Flashing Arrow Panels shall be equipped with automatic dimming devices.

WHEN NOT IN USE, REMOVE THE ARROW PANEL FROM THE RIGHT-OF-WAY OR PLACE THE ARROW PANEL BEHIND CONCRETE TRAFFIC BARRIER OR GUARDRAIL.

11. The Flashing Arrow Panel shall be mounted on a vehicle, trailer or other suitable support.
12. A Flashing Arrow Panel SHALL NOT BE USED to laterally shift traffic.
13. A full matrix PCMS may be used to simulate a Flashing Arrow Panel provided it meets visibility, flash rate and dimming requirements on this sheet for the same size arrow.
14. Minimum mounting height of trailer mounted arrow panels should be 7 feet from roadway to bottom of panel.

STANDARD PLANS
Texas Department of Transportation
Traffic Operations Division

BARRICADE AND CONSTRUCTION
FLASHING ARROW PANEL
STANDARD

14 of 27 BC(7)-07

© TxDOT

DN: - TxDOT	CK: - TxDOT	DW: - TxDOT	CK: - TxDOT

REVISIONS	STATE DISTRICT	FEDERAL REGION 6	FEDERAL AID PROJECT			SHEET
	COUNTY		CONTROL	SECTION	JOB	HIGHWAY

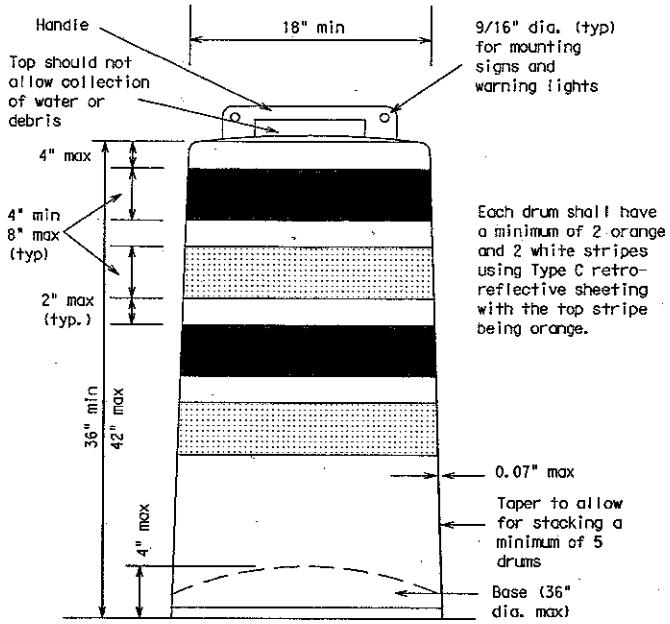

GENERAL NOTES

1. For long term stationary work zones on freeways, drums shall be used as the primary channelizing device.
2. For intermediate term stationary work zones on freeways, drums should be used as the primary channelizing device but may be replaced in tangent sections by vertical panels, or 42" two-piece cones. In tangent sections one-piece cones may be used with the approval of the Engineer but only if personnel are present on the project at all times to maintain the cones in proper position and location.
3. For short term stationary work zones on freeways, drums are the preferred channelizing device but may be replaced in tapers, transitions and tangent sections by vertical panels, two-piece cones or one-piece cones as approved by the Engineer.
4. Drums and all related items shall comply with the requirements of the current version of the "Texas Manual on Uniform Traffic Control Devices" (TMUTCD) and the "Compliant Work Zone Traffic Control Devices List" (CWZTCD).
5. Drums, bases, and related materials shall exhibit good workmanship and shall be free from objectionable marks or defects that would adversely affect their appearance or serviceability.
6. The Contractor shall have a maximum of 24 hours to replace any plastic drums identified for replacement by the Engineer/Inspector. The replacement device must be an approved device.

GENERAL DESIGN REQUIREMENTS

Prequalified plastic drums shall meet the following requirements:

1. Plastic drums shall be a two-piece design; the "body" of the drum shall be the top portion and the "base" shall be the bottom.
2. The body and base shall lock together in such a manner that the body separates from the base when impacted by a vehicle traveling at a speed of 20 MPH or greater but prevents accidental separation due to normal handling and/or air turbulence created by passing vehicles.
3. Plastic drums shall be constructed of lightweight flexible, and deformable materials. The Contractor shall NOT use metal drums or single piece plastic drums as channelization devices or sign supports.
4. Drums shall present a profile that is a minimum of 18 inches in width at the 36 inch height when viewed from any direction. The height of drum unit (body installed on base) shall be a minimum of 36 inches and a maximum of 42 inches.
5. The top of the drum shall have a built-in handle for easy pickup and shall be designed to drain water and not collect debris. The handle shall have a minimum of two widely spaced 9/16 inch diameter holes to allow attachment of a warning light, warning reflector unit or approved compliant sign.
6. The exterior of the drum body shall have a minimum of four alternating orange and white retroreflective circumferential stripes not less than 4 inches nor greater than 8 inches in width. Any non-reflectorized space between any two adjacent stripes shall not exceed 2 inches in width.
7. Bases shall have a maximum width of 36 inches, a maximum height of 4 inches, and a minimum of two footholds of sufficient size to allow base to be held down while separating the drum body from the base.
8. Plastic drums shall be constructed of ultra-violet stabilized, orange, high-density polyethylene (HDPE) or other approved material.
9. Drum body shall have a minimum unballasted weight of 7.7 lbs. and maximum unballasted weight of 11 lbs. The wall of the drum body shall be a minimum of 0.07 inch in thickness. Weight of any drum supplied shall not vary more than 0.5 lb. from that of the prequalified sample.
10. Drum and base shall be marked with manufacturer's name and model number.

RETROREFLECTIVE SHEETING

1. The stripes used on drums shall be constructed of sheeting meeting the color and retroreflectivity requirements of Departmental Materials Specification DMS-8300, "Flat Surface Reflective Sheeting." High Specific Intensity (Type C) retroreflective sheeting shall be supplied unless otherwise specified in the plans.
2. The sheeting shall be suitable for use on and shall adhere to the drum surface such that, upon vehicular impact, the sheeting shall remain adhered in-place and exhibit no delaminating, cracking, or loss of retroreflectivity other than that loss due to abrasion of the sheeting surface.

BALLAST

1. Unballasted bases shall be large enough to hold up to 50 lbs. of sand. This base, when filled with the ballast material, should weigh between 35 lbs (minimum) and 50 lbs (maximum). The ballast may be sand in one to three sandbags separate from the base, sand in a sand-filled plastic base, or other ballasting devices as approved by the Engineer. Stacking of sandbags will be allowed, however height of sandbags above pavement surface may not exceed 12 inches.
2. Bases with built-in ballast shall weigh between 40 lbs. and 50 lbs. Built-in ballast can be constructed of an integral crumb rubber base or a solid rubber base.
3. The ballast shall not be heavy objects, water, or any material that would become hazardous to motorists, pedestrians, or workers when the drum is struck by a vehicle.
4. When used in regions susceptible to freezing, drums shall have drainage holes in the bottoms so that water will not collect and freeze becoming a hazard when struck by a vehicle.
5. Ballast shall not be placed on top of drums.
6. Adhesives may be used to secure base of drums to pavement.

STANDARD PLANS
Texas Department of Transportation
Traffic Operations Division

BARRICADE AND CONSTRUCTION CHANNELIZING DEVICES STANDARD

© TxDOT

DN: - TxDOT	CK: - TxDOT	DW: - TxDOT	CK: - TxDOT

REVISIONS	STATE DISTRICT	FEDERAL REGION	FEDERAL AID PROJECT	SHEET
		6		
	COUNTY		CONTROL / SECTION / JOB	HIGHWAY

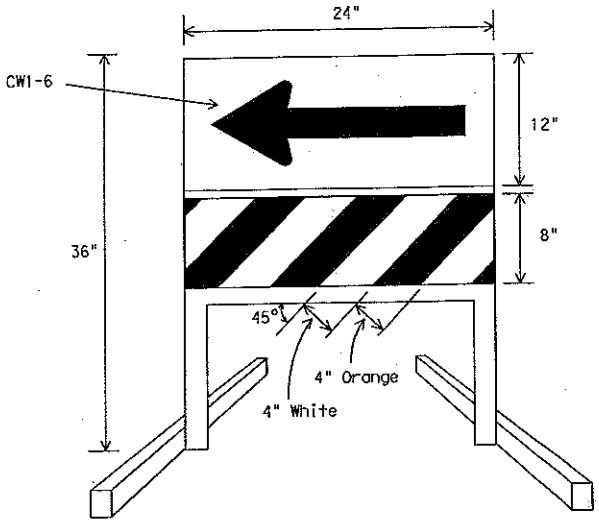

DIRECTION INDICATOR BARRICADE

1. The Direction Indicator Barricade may be used in tapers, transitions, and other areas where specific directional guidance to drivers is necessary.
2. If used, the Direction Indicator Barricade should be used in series to direct the driver through the transition and into the intended travel lane.
3. The Direction Indicator Barricade shall consist of One-Direction Large Arrow (CW1-6) sign in the size shown with a black arrow on a background of Type E Fluoprescent Prismatic Orange above a rail with Type C High Specific Intensity retroreflective sheeting in alternation 4" white and orange stripes sloping downward at an angle of 45 degrees in the direction road users are to pass.
4. Double arrows on the Direction Indicator Barricade will not be allowed.
5. Approved manufacturers are shown on the CWZTCD List. Ballast shall be as approved by the manufacturers instructions.

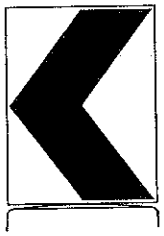

18" x 24" Sign
(Maximum Sign Dimension)
Chevron CW1-8, Opposing Traffic Lane Divider, Driveway sign D70a, Keep Right R4 series or other signs as approved by Engineer

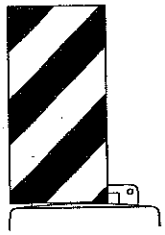

12" x 24"
Vertical Panel
mount with diagonals sloping down towards travel way

Plywood, Aluminum or Metal sign substrates shall NOT be used on plastic drums

SIGNS, CHEVRONS, AND VERTICAL PANELS MOUNTED ON PLASTIC DRUMS

1. Signs used on plastic drums shall be manufactured using substrates listed on the CWZTCD.
2. Chevrons and other work zone signs with an orange background shall be manufactured with Type E (Fluorescent Prismatic) sheeting meeting the color and retroreflectivity requirements of DMS-8300, "Sign Face Material," unless otherwise specified in the plans.
3. Vertical Panels shall be manufactured with orange and white sheeting meeting the requirements of DMS-8300 Type C (High Specific Intensity). Diagonal stripes on Vertical Panels shall slope down toward the intended traveled lane.
4. Other sign messages (text or symbolic) may be used as approved by the Engineer. Sign dimensions shall not exceed 18 inches in width or 24 inches in height.
5. Signs shall be installed using a 1/2 inch bolt (nominal) and nut, two washers, and one locking washer for each connection.
6. Mounting bolts and nuts shall be fully engaged and adequately torqued. Bolts should not extend more than 1/2 inch beyond nuts.
7. Chevrons may be placed on drums on the outside of curves, on merging tapers or on shifting tapers. When used in these locations they may be placed on every drum or spaced not more than on every third drum. A minimum of three (3) should be used at each location called for in the plans.
8. R9-9, R9-10, R9-11 and R9-11a Sidewalk Closed signs which are 24 inches wide may be mounted on plastic drums, with approval of the Engineer.

STANDARD PLANS
Texas Department of Transportation
Traffic Operations Division

BARRICADE AND CONSTRUCTION CHANNELIZING DEVICES STANDARD

BC(8)-07

© TxDOT

DGN - TxDOT	CKD - TxDOT	DWN - TxDOT	CKD - TxDOT

REVISIONS	STATE DISTRICT	FEDERAL REGION	FEDERAL AID PROJECT	SHEET
		6		
	COUNTY		CONTROL / SECTION / JOB	HIGHWAY

VERTICAL PANELS (VPs)

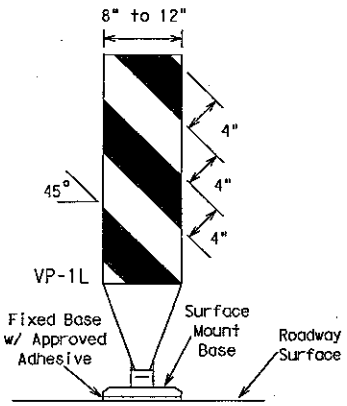

FIXED

(Rigid or self-righting)

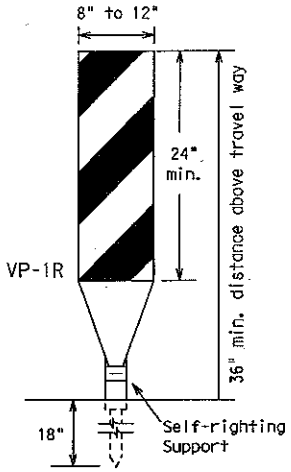

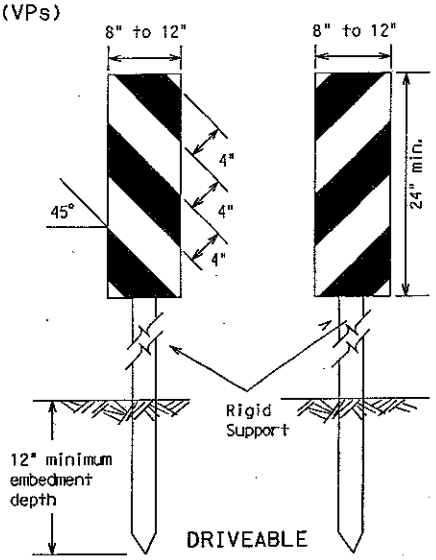

DRIVEABLE

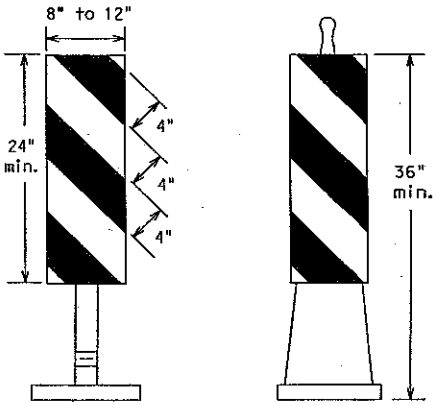

(Rigid or self-righting)

PORTABLE

1. Vertical Panels (VP's) are normally used to channelize traffic or divide opposing lanes of traffic.
2. VP's may be used in daytime or nighttime situations. They may be used at the edge of shoulder drop-offs and other areas such as lane transitions where positive daytime and nighttime delineation is required. The Engineer/Inspector shall refer to the Roadway Design Manual Appendix B "Treatment of Pavement Drop-offs in Work Zones" for additional guidelines on the use of VP's for drop-offs.
3. VP's should be mounted back to back if used at the edge of cuts adjacent to two-way two lane roadways. Stripes are to be reflective orange and reflective white and should always slope downward toward the travel lane.
4. VP's used on expressways and freeways or other high speed roadways, shall have a minimum of 270 square inches of retroreflective area facing traffic.
5. Self-righting supports are available with portable base. See "Compliant Work Zone Traffic Control Devices List" (CWZTCD).
6. Sheeting for the VP's shall be retroreflective Type C (High Specific Intensity) conforming to Departmental Material Specification DMS-8300, unless noted otherwise.
7. Where the height of reflective material on the vertical panel is greater than 36 inches, a panel stripe of 6 inches shall be used.

GENERAL NOTES:

1. Work Zone channelizing devices illustrated on this sheet may be installed in close proximity to traffic and are suitable for use on high or low speed roadways. The Engineer/Inspector shall ensure that spacing and placement is uniform and in accordance with the "Texas Manual on Uniform Traffic Control Devices" (TMUTCD).
2. Channelizing devices shown on this sheet may have a driveable, fixed or portable base. The requirement for self-righting channelizing devices must be specified in the General Notes or other plan sheets.
3. Channelizing devices on self-righting supports should be used in work zone areas where channelizing devices are frequently impacted by errant vehicles or vehicle related wind gusts making alignment of the channelizing devices difficult to maintain. Locations of these devices shall be detailed elsewhere in the plans. These devices shall conform to the TMUTCD and the "Compliant Work Zone Traffic Control Devices List" (CWZTCD).
4. The Contractor shall maintain devices in a clean condition and replace damaged, nonreflective, faded, or broken devices and bases as required by the Engineer/Inspector. The Contractor shall be required to maintain proper device spacing and alignment.
5. Portable bases shall be fabricated from virgin and/or recycled rubber. The portable bases shall weigh approximately 35 lbs.
6. Pavement surfaces shall be prepared in a manner that ensures proper bonding between the adhesives, the fixed mount bases and the pavement surface. Adhesives shall be prepared and applied according to the manufacturer's recommendations.
7. The installation and removal of channelizing devices shall not cause detrimental effects to the final pavement surfaces, including pavement surface discoloration or surface integrity. Driveable bases shall not be permitted on final pavement surfaces. The Engineer/Inspector shall approve all application and removal procedures of fixed bases.
8. Examples on this sheet are commonly used channelizing devices in work zones. For other devices, refer to the CWZTCD.

Posted Speed	Formula	Minimum Desirable Taper Lengths ✱✱ 10' Offset	11' Offset	12' Offset	Suggested Maximum Spacing of Channelizing Devices On a Taper	On a Tangent
30	$L = \frac{WS^2}{60}$	150'	165'	180'	30'	60'-75'
35		205'	225'	245'	35'	70'-90'
40		265'	295'	320'	40'	80'-100'
45	L=WS	450'	495'	540'	45'	90'-110'
50		500'	550'	600'	50'	100'-125'
55		550'	605'	660'	55'	110'-140'
60		600'	660'	720'	60'	120'-150'
65		650'	715'	780'	65'	130'-165'
70		700'	770'	840'	70'	140'-175'
75		750'	825'	900'	75'	150'-185'
80		800'	880'	960'	80'	160'-195'

✱✱Taper lengths have been rounded off.
L=Length of Taper (FT.) W=Width of Offset (FT.)
S=Posted Speed (MPH)

STANDARD PLANS
Texas Department of Transportation
Traffic Operations Division

BARRICADE AND CONSTRUCTION CHANNELIZING DEVICES STANDARD

17 of 27 BC(9)-07

© TxDOT DN: - TxDOT CK: - TxDOT DW: - TxDOT CK: - TxDOT

REVISIONS	STATE DISTRICT	FEDERAL REGION	FEDERAL AID PROJECT			SHEET
		6				
	COUNTY		CONTROL	SECTION	JOB	HIGHWAY

CHEVRONS

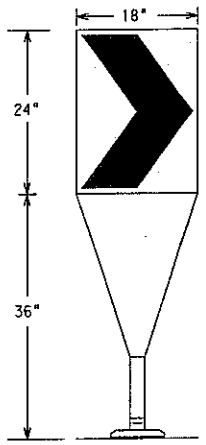

Fixed Base w/ Approved Adhesive (Driveable Base, or Flexible Support can be used)

1. The chevron shall be a vertical rectangle with a minimum size of 12 by 18 inches.
2. Chevrons are intended to give notice of a sharp change of alignment with the direction of travel and provide additional emphasis and guidance for vehicle operators with regard to changes in horizontal alignment of the roadway.
3. Chevrons, when used, shall be erected on the outside of a sharp curve or turn, or on the far side of an intersection. They shall be in line with and at right angles to approaching traffic. Spacing should be such that the motorist always has three in view, until the change in alignment eliminates its need.
4. To be effective, the chevron should be visible for at least 500 feet.
5. Chevrons shall be orange with a black nonreflective legend. Sheeting for the chevron shall be retroreflective Type E (Fluorescent Prismatic) conforming to Departmental Material Specification DMS-8300, unless noted otherwise. The legend shall be black vinyl non-reflective decal sheeting meeting the requirements of DMS-8300.
6. For Long Term Stationary use on tapers or transitions on freeways and divided highways self-righting chevrons may be used to supplement plastic drums but not to replace plastic drums.

OPPOSING TRAFFIC LANE DIVIDERS (OTLD)

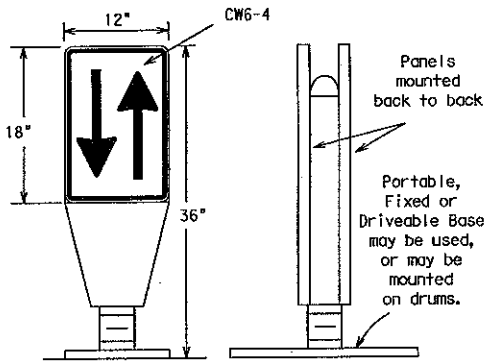

1. Opposing Traffic Lane Dividers (OTLD) are delineation devices designed to convert a normal one-way roadway section to two-way operation. OTLD's are used on temporary centerlines. The upward and downward arrows on the sign's face indicate the direction of traffic on either side of the divider. The base is secured to the pavement with an adhesive or rubber weight to minimize movement caused by a vehicle impact or wind gust.
2. The OTLD may be used in combination with simple tubular markers or VPs.
3. Spacing between the OTLD shall not exceed 500 feet. Tubular markers or VPs placed between the OTLD's should not exceed 100 foot spacing.
4. The OTLD shall be orange with a black non-reflective legend. Sheeting for the OTLD shall be retroreflective Type E (Fluorescent Prismatic) conforming to Departmental Material Specification DMS-8300, unless noted otherwise. The legend shall be black vinyl non-reflective decal sheeting meeting the requirements of DMS-8300.

GENERAL NOTES:

1. Work Zone channelizing devices illustrated on this sheet may be installed in close proximity to traffic and are suitable for use on high or low speed roadways. The Engineer/Inspector shall ensure that spacing and placement is uniform and in accordance with the "Texas Manual on Uniform Traffic Control Devices" (TMUTCD).
2. Channelizing devices shown on this sheet may have a driveable, fixed or portable base. The requirement for self-righting channelizing devices must be specified in the General Notes or other plan sheets.
3. Channelizing devices on self-righting supports should be used in work zone areas where channelizing devices are frequently impacted by errant vehicles or vehicle related wind gusts making alignment of the channelizing devices difficult to maintain. Locations of these devices shall be detailed elsewhere in the plans. These devices shall conform to the TMUTCD and the "Compliant Work Zone Traffic Control Devices List" (CWZTCD).
4. The Contractor shall maintain devices in a clean condition and replace damaged, nonreflective, faded, or broken devices and bases as required by the Engineer/Inspector. The Contractor shall be required to maintain proper device spacing and alignment.
5. Portable bases shall be fabricated from virgin and/or recycled rubber. The portable bases shall weigh approximately 35 lbs.
6. Pavement surfaces shall be prepared in a manner that ensures proper bonding between the adhesives, the fixed mount bases and the pavement surface. Adhesives shall be prepared and applied according to the manufacturer's recommendations.
7. The installation and removal of channelizing devices shall not cause detrimental effects to the final pavement surfaces, including pavement surface discoloration or surface integrity. Driveable bases shall not be permitted on final pavement surfaces. The Engineer/Inspector shall approve all application and removal procedures of fixed bases.
8. Examples on this sheet are commonly used channelizing devices in work zones. For other devices, refer to the CWZTCD.

		Minimum Desirable Taper Lengths ✱✱			Suggested Maximum Spacing of Channelizing Devices	
Posted Speed	Formula	10' Offset	11' Offset	12' Offset	On a Taper	On a Tangent
30	$L = \frac{WS^2}{60}$	150'	165'	180'	30'	60'-75'
35		205'	225'	245'	35'	70'-90'
40		265'	295'	320'	40'	80'-100'
45	L=WS	450'	495'	540'	45'	90'-110'
50		500'	550'	600'	50'	100'-125'
55		550'	605'	660'	55'	110'-140'
60		600'	660'	720'	60'	120'-150'
65		650'	715'	780'	65'	130'-165'
70		700'	770'	840'	70'	140'-175'
75		750'	825'	900'	75'	150'-185'
80		800'	880'	960'	80'	160'-195'

✱✱Taper lengths have been rounded off.
L=Length of Taper (FT.) W=Width of Offset (FT.)
S=Posted Speed (MPH)

STANDARD PLANS
Texas Department of Transportation
Traffic Operations Division

BARRICADE AND CONSTRUCTION CHANNELIZING DEVICES STANDARD

 BC(9)-07

©TxDOT DN:-TxDOT CK:-TxDOT DW:-TxDOT CK:-TxDOT

REVISIONS	STATE DISTRICT	FEDERAL REGION	FEDERAL AID PROJECT			SHEET
		6				
	COUNTY		CONTROL	SECTION	JOB	HIGHWAY

HOLLOW OR WATER BALLASTED SYSTEMS USED AS LONGITUDINAL CHANNELIZING DEVICES OR BARRIERS

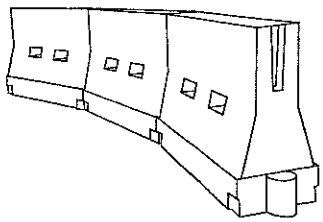

LONGITUDINAL CHANNELIZING DEVICES

1. Longitudinal channelizing devices are crashworthy, lightweight, deformable devices that are highly visible, have good target value and can be connected together. **They are not designed to contain or redirect a vehicle on impact.**
2. Longitudinal channelizing devices may be used instead of a line of cones or drums.
3. Longitudinal channelizing devices shall be placed in accordance to application and installation requirements specific to the device, and used only when shown on the CWZTCD list.
4. Longitudinal channelizing devices should not be used to provide positive protection for obstacles, pedestrians or workers.
5. Longitudinal channelizing devices shall be retroreflective, or supplemented with retroreflective delineation as required for temporary barriers on BC(7)-07.

WATER BALLASTED SYSTEMS USED AS BARRIERS

1. Water ballasted systems used as barriers shall not be used solely to channelize road users, but also to protect the work space per the appropriate NCHRP 350 crashworthiness requirements based on roadway speed and barrier application.
2. Water ballasted systems used to channelize vehicular traffic shall be supplemented with retroreflective delineation or channelizing devices to improve daytime/nighttime visibility. They may also be supplemented with pavement markings.
3. Water ballasted systems used as barriers shall be placed in accordance to application and installation requirements specific to the device, and used only when shown on the CWZTCD list.
4. Water ballasted systems used as barriers should not be used for a merging taper except in low speed (less than 45 MPH) urban areas. When used on a taper in a low speed urban area, the taper shall be delineated and the taper length should be designed to optimize road user operations considering the available geometric conditions.
5. When water ballasted systems used as barriers have blunt ends exposed to traffic, they should be attenuated as per manufacturer recommendations or flared to point outside the clear zone.

If used to channelize pedestrians, longitudinal channelizing devices or water ballasted systems must have a continuous detectable bottom for users of long canes and the top of the unit shall be not less than 32 inches in height.

GENERAL NOTES:

1. Work Zone channelizing devices illustrated on this sheet may be installed in close proximity to traffic and are suitable for use on high or low speed roadways. The Engineer/Inspector shall ensure that spacing and placement is uniform and in accordance with the "Texas Manual on Uniform Traffic Control Devices" (TMUTCD).
2. Channelizing devices shown on this sheet may have a driveable, fixed or portable base. The requirement for self-righting channelizing devices must be specified in the General Notes or other plan sheets.
3. Channelizing devices on self-righting supports should be used in work zone areas where channelizing devices are frequently impacted by errant vehicles or vehicle related wind gusts making alignment of the channelizing devices difficult to maintain. Locations of these devices shall be detailed elsewhere in the plans. These devices shall conform to the TMUTCD and the "Compliant Work Zone Traffic Control Devices List" (CWZTCD).
4. The Contractor shall maintain devices in a clean condition and replace damaged, nonreflective, faded, or broken devices and bases as required by the Engineer/Inspector. The Contractor shall be required to maintain proper device spacing and alignment.
5. Portable bases shall be fabricated from virgin and/or recycled rubber. The portable bases shall weigh approximately 35 lbs.
6. Pavement surfaces shall be prepared in a manner that ensures proper bonding between the adhesives, the fixed mount bases and the pavement surface. Adhesives shall be prepared and applied according to the manufacturer's recommendations.
7. The installation and removal of channelizing devices shall not cause detrimental effects to the final pavement surfaces, including pavement surface discoloration or surface integrity. Driveable bases shall not be permitted on final pavement surfaces. The Engineer/Inspector shall approve all application and removal procedures of fixed bases.
8. Examples on this sheet are commonly used channelizing devices in work zones. For other devices, refer to the CWZTCD.

		Minimum Desirable Taper Lengths ✱✱			Suggested Maximum Spacing of Channelizing Devices	
Posted Speed	Formula	10' Offset	11' Offset	12' Offset	On a Taper	On a Tangent
30	$L = \frac{WS^2}{60}$	150'	165'	180'	30'	60'-75'
35		205'	225'	245'	35'	70'-90'
40		265'	295'	320'	40'	80'-100'
45	L=WS	450'	495'	540'	45'	90'-110'
50		500'	550'	600'	50'	100'-125'
55		550'	605'	660'	55'	110'-140'
60		600'	660'	720'	60'	120'-150'
65		650'	715'	780'	65'	130'-165'
70		700'	770'	840'	70'	140'-175'
75		750'	825'	900'	75'	150'-185'
80		800'	880'	960'	80'	160'-195'

✱✱Taper lengths have been rounded off.
L=Length of Taper (FT.) W=Width of Offset (FT.)
S=Posted Speed (MPH)

STANDARD PLANS
Texas Department of Transportation
Traffic Operations Division

BARRICADE AND CONSTRUCTION CHANNELIZING DEVICES STANDARD

 BC(9)-07

©TxDOT DN: - TxDOT CK: - TxDOT DW: - TxDOT CK: - TxDOT

REVISIONS	STATE DISTRICT	FEDERAL REGION	FEDERAL AID PROJECT			SHEET
		6				
	COUNTY		CONTROL	SECTION	JOB	HIGHWAY

VERTICAL PANELS & OPPOSING TRAFFIC LANE DIVIDERS SEPARATING TWO-WAY TRAFFIC
(Typical application)

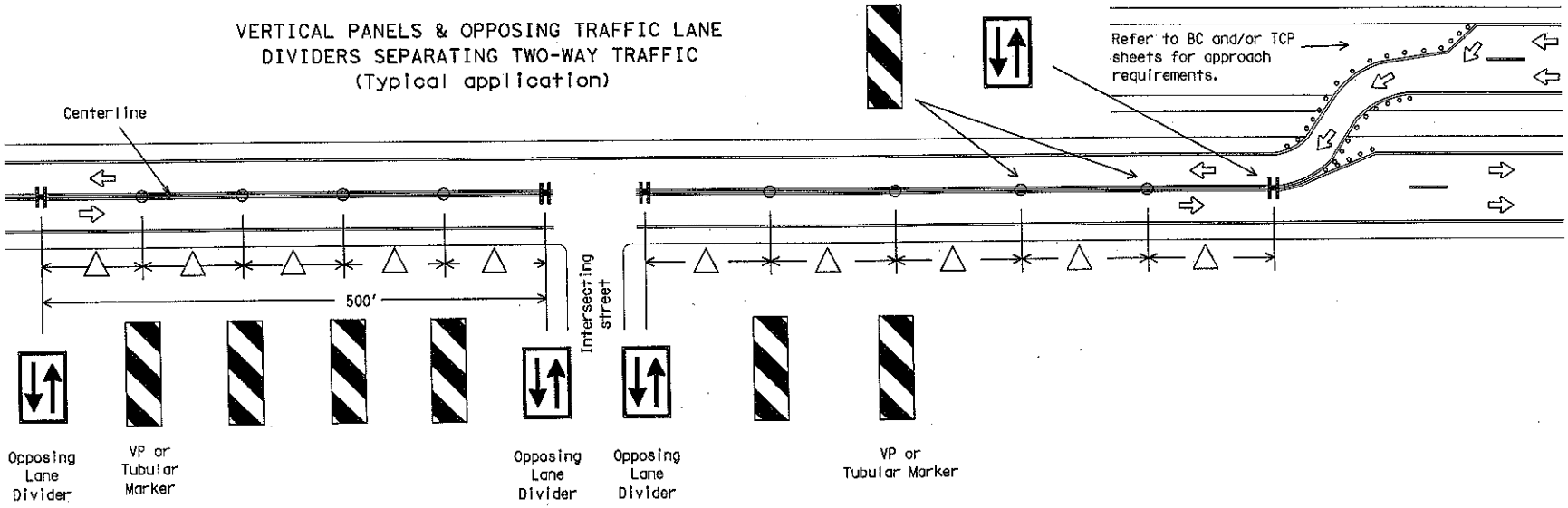

△ Spacing between the VP's or tubular markers shall not exceed 100 feet. On roadways with speeds less than 45 MPH, spacing between the tubular markers or VP's shall be as shown on the channelizing spacing table shown on this page. If the table shows spacing greater than 100 feet based on the roadway speed, then use a maximum of 100 feet spacing between the tubular markers or VP's. Every fifth channelizing device shall be an OTLD, except when the OLTD must be spaced closer to accomodate an intersection. Spacing between the OTLD shall not exceed 500 feet.

Posted Speed	Formula	Minimum Desirable Taper Lengths ✱✱ 10' Offset	11' Offset	12' Offset	Suggested Maximum Spacing of Channelizing Devices On a Taper	On a Tangent
30	$L=\frac{WS^2}{60}$	150'	165'	180'	30'	60'-75'
35		205'	225'	245'	35'	70'-90'
40		265'	295'	320'	40'	80'-100'
45	L=WS	450'	495'	540'	45'	90'-110'
50		500'	550'	600'	50'	100'-125'
55		550'	605'	660'	55'	110'-140'
60		600'	660'	720'	60'	120'-150'
65		650'	715'	780'	65'	130'-165'
70		700'	770'	840'	70'	140'-175'
75		750'	825'	900'	75'	150'-185'
80		800'	880'	960'	80'	160'-195'

✱✱Taper lengths have been rounded off.
L=Length of Taper (FT.) W=Width of Offset (FT.)
S=Posted Speed (MPH)

GENERAL NOTES:

1. Work Zone channelizing devices illustrated on this sheet may be installed in close proximity to traffic and are suitable for use on high or low speed roadways. The Engineer/Inspector shall ensure that spacing and placement is uniform and in accordance with the "Texas Manual on Uniform Traffic Control Devices" (TMUTCD).
2. Channelizing devices shown on this sheet may have a driveable, fixed or portable base. The requirement for self-righting channelizing devices must be specified in the General Notes or other plan sheets.
3. Channelizing devices on self-righting supports should be used in work zone areas where channelizing devices are frequently impacted by errant vehicles or vehicle related wind gusts making alignment of the channelizing devices difficult to maintain. Locations of these devices shall be detailed elsewhere in the plans. These devices shall conform to the TMUTCD and the "Compliant Work Zone Traffic Control Devices List" (CWZTCD).
4. The Contractor shall maintain devices in a clean condition and replace damaged, nonreflective, faded, or broken devices and bases as required by the Engineer/Inspector. The Contractor shall be required to maintain proper device spacing and alignment.
5. Portable bases shall be fabricated from virgin and/or recycled rubber. The portable bases shall weigh approximately 35 lbs.
6. Pavement surfaces shall be prepared in a manner that ensures proper bonding between the adhesives, the fixed mount bases and the pavement surface. Adhesives shall be prepared and applied according to the manufacturer's recommendations.
7. The installation and removal of channelizing devices shall not cause detrimental effects to the final pavement surfaces, including pavement surface discoloration or surface integrity. Driveable bases shall not be permitted on final pavement surfaces. The Engineer/Inspector shall approve all application and removal procedures of fixed bases.
8. Examples on this sheet are commonly used channelizing devices in work zones. For other devices, refer to the CWZTCD.

STANDARD PLANS
Texas Department of Transportation
Traffic Operations Division
BARRICADE AND CONSTRUCTION
CHANNELIZING DEVICES
STANDARD
BC(9)-07

©TxDOT	DN: TxDOT	CK: TxDOT	DW: TxDOT	CK: TxDOT
REVISIONS	STATE DISTRICT	FEDERAL REGION 6	FEDERAL AID PROJECT	SHEET
	COUNTY			
	CONTROL	SECTION	JOB	HIGHWAY

TYPE III BARRICADE (POST AND SKID) TYPICAL APPLICATION

Each roadway of a divided highway shall be barricaded in the same manner.

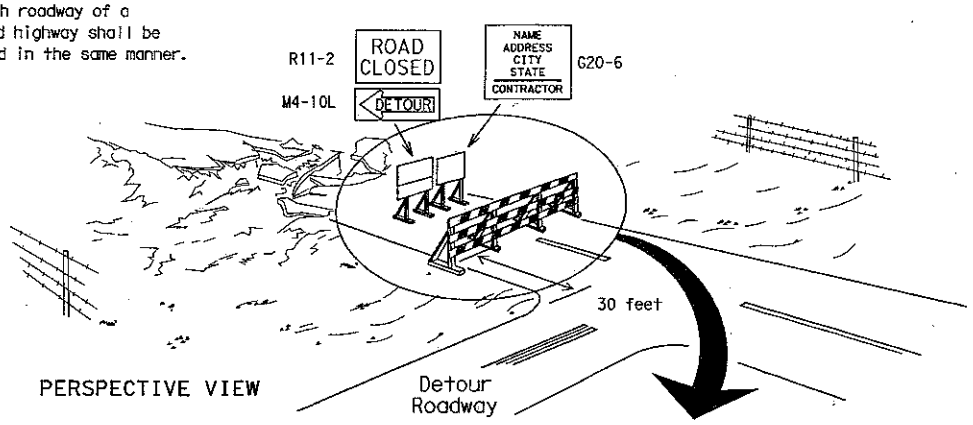

PERSPECTIVE VIEW

The three rails on Type III barricades shall be reflectorized orange and reflective white stripes on one side facing one-way traffic and both sides for two-way traffic.

Barricade striping should slant downward in the direction of detour.

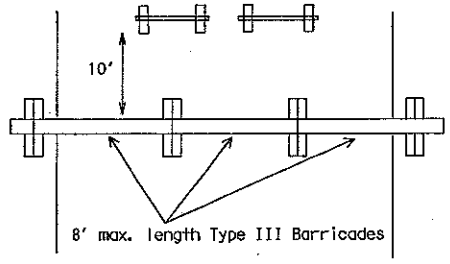

PLAN VIEW

1. Signs should be mounted on independent supports at a 7 foot mounting height in center of roadway. The signs should be a minimum of 10 feet behind Type III Barricades.
2. Advance signing shall be as specified elsewhere in the plans.

TYPE III BARRICADES

1. Refer to the Compliant Work Zone Traffic Control Devices List (CWZTCD) for details of the Type III Barricades and a list of all materials used in the construction of Type III Baricades.
2. Type III Barricades shall be used at each end of construction projects closed to all traffic.
3. Barricades extending across a roadway should have stripes that slope downward in the direction toward which traffic must turn in detouring. When both right and left turns are provided, the chevron striping may slope downward in both directions from the center of the barricade. Where no turns are provided at a closed road striping should slope downward in both directions toward the center of roadway.
4. Striping of rails, for the right side of the roadway, should slope downward to the left. For the left side of the roadway, striping should slope downward to the right.
5. Identification markings may be shown only on the back of the barricade rails. The maximum height of letters and/or company logos used for identification shall be 1".
6. Barricades shall not be placed parallel to traffic unless an adequate clear zone is provided.
7. Warning lights shall NOT be installed on barricades.
8. Where barricades require the use of weights to keep from turning over, the use of sandbags with dry, cohesionless sand is recommended. The sandbags will be tied shut to keep the sand from spilling and to maintain a constant weight. Sand bags shall not be stacked in a manner that covers any portion of a barricade rails reflective sheeting. Rock, concrete, iron, steel or other solid objects will NOT be permitted. Sandbags should weigh a minimum of 35 lbs and a maximum of 50 lbs. Sandbags shall be made of a durable material that tears upon vehicular impact. Rubber (such as tire inner tubes) shall not be used for sandbags. Sandbags shall only be placed along or upon the base supports of the device and shall not be suspended above ground level or hung with rope, wire, chains or other fasteners.
9. Sheeting for barricades shall be retroreflective Type C (High Specific Intensity) conforming to Departmental Material Specification DMS-8300 unless otherwise noted.

Barricades shall NOT be used as a sign support.

TYPICAL STRIPING DETAIL FOR BARRICADE RAIL

TYPICAL PANEL DETAIL FOR SKID OR POST TYPE BARRICADES

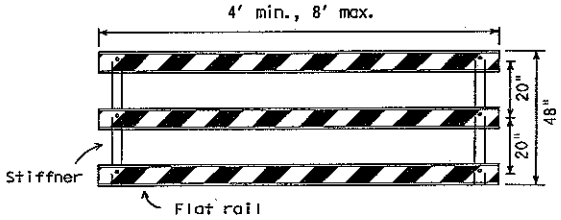

Stiffner may be inside or outside of support, but no more than 2 stiffeners shall be allowed on one barricade.

STANDARD PLANS
Texas Department of Transportation
Traffic Operations Division

BARRICADE AND CONSTRUCTION CHANNELIZING DEVICES STANDARD

21 of 27 BC(10)-07

© TxDOT	DN - TxDOT	CK - TxDOT	DW - TxDOT	CK - TxDOT
REVISIONS	STATE DISTRICT	FEDERAL REGION 6	FEDERAL AID PROJECT	SHEET
	COUNTY	CONTROL	SECTION	JOB	HIGHWAY

CONES

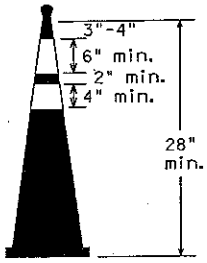

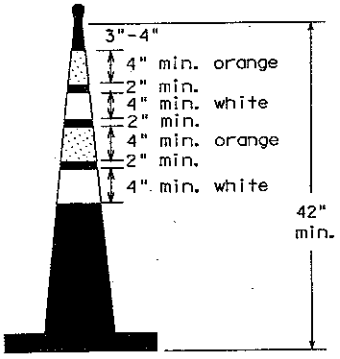

Two-Piece cones

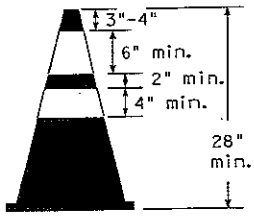

One-Piece cones

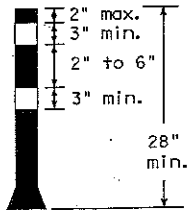

Tubular Marker

28" Cones shall have a minimum weight of 9 1/2 lbs.

42" 2-piece cones shall have a minimum weight of 30 lbs. including base.

1. Traffic cones and tubular markers shall be a minimum of 28 inches in height when used either on freeways or at nighttime.
2. Cones or tubular markers shall be predominantly orange, fluorescent red-orange, or fluorescent yellow-orange. They should be kept clean and bright for maximum visibility.
3. Cones used only for daytime operations do not require the reflectorized bands.
4. Cones and tubular markers used for nighttime operations shall be reflectorized. Reflectorized material shall have a smooth, sealed outer surface that displays the same approximate color during the day and night. The reflectorized bands shall be retroreflective Type C (High Specific Intensity) conforming to Departmental Material Specification DMS-8300, unless otherwise noted.
5. When used at night, appropriate personnel shall ensure that cones and tubular markers remain in their proper location and in an upright position.
6. Reflectorization of 28"cones shall consist of a minimum 6 inch band placed at least 3 inches but not more than 4 inches from the top, supplemented by a minimum 4 inch band spaced a minimum of 2 inches below the 6 inch band.
7. Reflectorization of 42" cones shall be provided by alternating 4 to 6" orange and white stripes with orange on top.
8. Reflectorization of tubular markers shall be a minimum of two 3 inch bands placed a maximum of 2 inches from the top with a maximum of 6 inches between bands.
9. One-piece cones or tubular markers are generally suitable for temporary usage (up to 8 hours) with other channelization devices such as vertical panels, drums or two-piece cones for long term usage. Care should be taken to ensure they remain in their proper location and in an upright position.
10. Cones or tubular markers used on each project shall be of the same size and shape.
11. The handle may be designed as a hook or other shape, fabricated from non-rigid materials similar to the cone material, and may extend up to a maximum of 8 inches above the top of cone. Length of the handle shall not be considered with regard to the overall height of the cone.

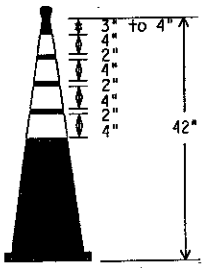

EDGELINE CHANNELIZER

1. This device is intended only for use in place of a vertical panel to channelize traffic by indicating the edge of the travel lane. It is not intended to be used in transitions or tapers.
2. This device shall not be used to separate lanes of traffic (opposing or otherwise) or warn of objects.
3. This device is based on a 42 inch, two-piece cone with an alternate striping pattern: four 4 inch retroreflective bands, with an approximate 2 inch gap between bands. The color of the band should correspond to the color of the edgeline (yellow for left edgeline, white for right edgeline) for which the device is substituted or for which it supplements. The reflectorized bands shall be retroreflective Type C encapsulated bead (High Specific Intensity) conforming to Departmental Material Specification DMS-8300, unless otherwise noted.
4. The base must weigh a minimum of 30 lbs.

STANDARD PLANS

Texas Department of Transportation

Traffic Operations Division

BARRICADE AND CONSTRUCTION CHANNELIZING DEVICES STANDARD

22 of 27 BC(10)-07

© TxDOT		DN: - TxDOT	CK: - TxDOT	DW: - TxDOT	CK: - TxDOT
REVISIONS	STATE DISTRICT	FEDERAL REGION 6	FEDERAL AID PROJECT		SHEET
	COUNTY		CONTROL	SECTION	JOB	HIGHWAY

CULVERT WIDENING OR OTHER ISOLATED WORK WITHIN THE PROJECT LIMITS

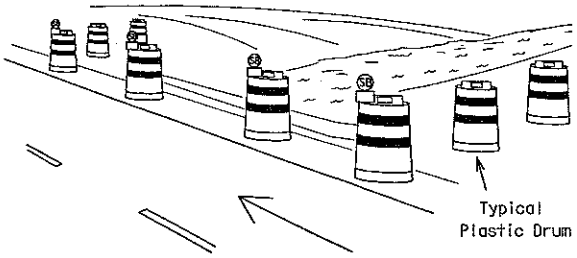

PERSPECTIVE VIEW

1. Where positive redirectional capability is provided, drums may be omitted.
2. Plastic construction fencing may be used with drums for safety as required in the plans.
3. Vertical Panels on flexible support may be substituted for drums when the shoulder width is less than 4 feet.
4. When the shoulder width is greater than 12 feet, steady-burn lights may be omitted if drums are used.
5. Drums must extend the length of the culvert widening.

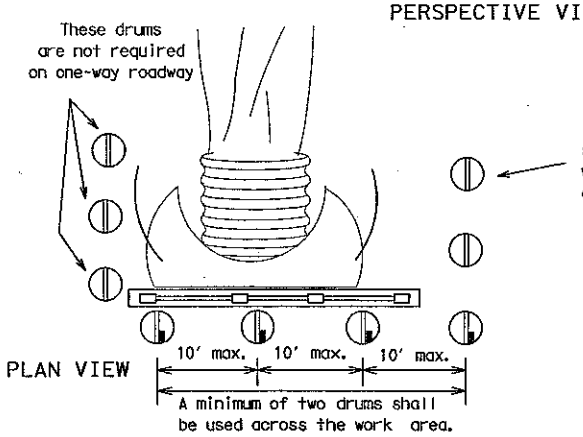

PLAN VIEW

Increase number of plastic drums on the side of approaching traffic if the crown width makes it necessary. (minimum of 2 and maximum of 4 drums)

Legend

- Plastic drum
- Plastic drum with steady burn light or yellow warning reflector
- SB Steady burn warning light or yellow warning reflector

TRAFFIC CONTROL FOR MATERIAL STOCKPILES

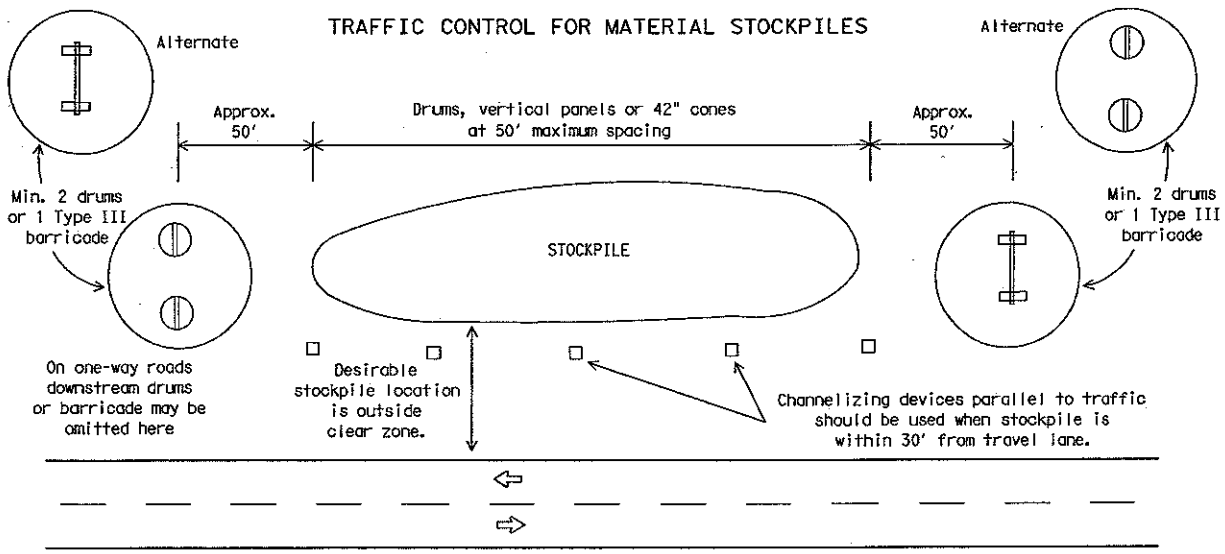

STANDARD PLANS
Texas Department of Transportation
Traffic Operations Division

BARRICADE AND CONSTRUCTION CHANNELIZING DEVICES STANDARD

23 of 27 BC(10)-07

© TxDOT	DN: - TxDOT	CK: - TxDOT	DW: - TxDOT	CK: - TxDOT
REVISIONS	STATE DISTRICT	FEDERAL REGION 6	FEDERAL AID PROJECT	SHEET
	COUNTY	CONTROL	SECTION	JOB	HIGHWAY

WORK ZONE PAVEMENT MARKINGS

GENERAL

1. The Contractor shall be responsible for maintaining work zone and existing pavement markings, in accordance with the standard specifications and special provisions, on all roadways open to traffic within the CSJ limits unless otherwise stated in the plans.
2. Color, patterns and dimensions shall be in conformance with the "Texas Manual on Uniform Traffic Control Devices" (TMUTCD).
3. Additional supplemental pavement marking details may be found in the plans or specifications.
4. Pavement markings shall be installed in accordance with the TMUTCD and as shown on the plans.
5. When short term markings are required on the plans, short term markings shall conform with the TMUTCD, the plans and details as shown on the Standard Plan Sheet WZ(STPM).
6. When standard pavement markings are not in place and the roadway is opened to traffic, DO NOT PASS signs shall be erected to mark the beginning of the sections where passing is prohibited and PASS WITH CARE signs at the beginning of sections where passing is permitted.
7. All work zone pavement markings shall be installed in accordance with Item 662, "Work Zone Pavement Markings."

RAISED PAVEMENT MARKERS

1. Raised pavement markers are to be placed according to the patterns on BC(12).
2. All raised pavement markers used for work zone markings shall meet the requirements of Item 672, "RAISED PAVEMENT MARKERS" and Departmental Material Specification DMS-4200 or DMS-4300.

PREFABRICATED PAVEMENT MARKINGS

1. Removable prefabricated pavement markings shall meet the requirements of DMS-8241.
2. Non-removable prefabricated pavement markings (foil back) shall meet the requirements of DMS-8240.

MAINTAINING WORK ZONE PAVEMENT MARKINGS

1. The Contractor will be responsible for maintaining work zone pavement markings within the work limits.
2. Work zone pavement markings shall be inspected in accordance with the frequency and reporting requirements of work zone traffic control device inspections as required by Form 599.
3. The markings should provide a visible reference for a minimum distance of 300 feet during normal daylight hours and 160 feet when illuminated by automobile low-beam headlights at night, unless sight distance is restricted by roadway geometrics.
4. Markings failing to meet this criteria within the first 30 days after placement shall be replaced at the expense of the Contractor as per Specification Item 662.

REMOVAL OF PAVEMENT MARKINGS

1. Pavement markings that are no longer applicable, could create confusion or direct a motorist toward or into the closed portion of the roadway, shall be removed or obliterated before the roadway is opened to traffic.
2. The above shall not apply to detours in place for less than two weeks, where flaggers and/or sufficient channelizing devices are used in lieu of markings to outline the detour route.
3. Pavement markings shall be removed to the fullest extent possible, so as not to leave a discernable marking. This shall be by any method approved by TxDOT Specification Item 677 for "Eliminating Existing Pavement Markings and Markers".
4. The removal of pavement markings may require resurfacing or seal coating portions of the roadway.
5. Subject to the approval of the Engineer, any method that proves to be successful on a particular type pavement may be used.
6. Blast cleaning may be used but will not be required unless specifically shown in the plans.
7. Over-painting of the markings SHALL NOT BE permitted.
8. Removal of raised pavement markers shall be as directed by the Engineer.
9. Removal of existing pavement markings and markers will be paid for directly in accordance with Item 677, "ELIMINATING EXISTING PAVEMENT MARKINGS AND MARKERS," unless otherwise stated in the plans.
10. Black-out marking tape may be used to cover conflicting existing markings for periods less than two weeks when approved by the Engineer.

DEPARTMENTAL MATERIAL SPECIFICATIONS

PAVEMENT MARKERS (REFLECTORIZED)	DMS-4200
TRAFFIC BUTTONS	DMS-4300
EPOXY AND ADHESIVES	DMS-6100
BITUMINOUS ADHESIVE FOR PAVEMENT MARKERS	DMS-6130
PREFABRICATED PAVEMENT MARKINGS-PERMANENT	DMS-8240
PREFABRICATED PAVEMENT MARKINGS-REMOVABLE	DMS-8241
TEMPORARY FLEXIBLE-REFLECTIVE ROADWAY MARKER TABS	DMS-8242

A list of prequalified reflective raised pavement markers, non-reflective traffic buttons, roadway marker tabs and other pavement markings can be found at the Material Producer List web address shown on BC(1).

STANDARD PLANS
Texas Department of Transportation
Traffic Operations Division

BARRICADE AND CONSTRUCTION PAVEMENT MARKINGS STANDARD

 BC(11)-07

© TxDOT DN: - TxDOT CK: - TxDOT DW: - TxDOT CK: - TxDOT

REVISIONS	STATE DISTRICT	FEDERAL REGION	FEDERAL AID PROJECT	SHEET
		6		
COUNTY	CONTROL	SECTION	JOB	HIGHWAY

Temporary Flexible-Reflective Roadway Marker Tabs

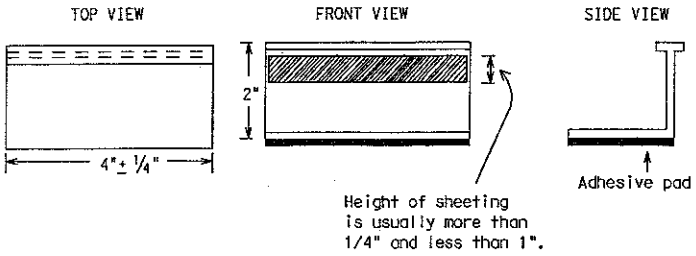

STAPLES OR NAILS SHALL NOT BE USED TO SECURE TEMPORARY FLEXIBLE-REFLECTIVE ROADWAY MARKER TABS TO THE PAVEMENT SURFACE

1. Temporary flexible-reflective roadway marker tabs used as guidemarks shall meet the requirements of DMS-8242.
2. Tabs detailed on this sheet are to be inspected and accepted by the Engineer or designated representative. Sampling and testing is not normally required, however at the option of the Engineer, either "A" or "B" below may be imposed to assure quality before placement on the roadway.
   A. Select five (5) or more tabs at random from each lot or shipment and submit to the Construction Division, Materials and Pavement Section to determine specification compliance.
   B. Select five (5) tabs and perform the following test. Affix five (5) tabs at 24 inch intervals on an asphaltic pavement in a straight line. Using a medium size passenger vehicle or pickup, run over the markers with the front and rear tires at a speed of 35 to 40 miles per hour, four (4) times in each direction. No more than one (1) out of the five (5) reflective surfaces shall be lost or displaced as a result of this test.
3. Small design variances may be noted between tab manufacturers.
4. See Standard Sheet WZ(STPM) for tab placement on new pavements. See Standard Sheet TCP(7-1) for tab placement on seal coat work.

Raised Pavement Markers used as Guidemarks

1. Raised pavement markers used as guidemarks shall be from the approved product list, and meet the requirements of DMS-4200.
2. All temporary construction raised pavement markers provided on a project shall be of the same manufacturer.
3. Adhesive for guidemarks shall be bituminous material hot applied or butyl rubber pad for all surfaces, or thermoplastic for concrete surfaces.

Guidemarks shall be designated as:
YELLOW - (two amber reflective surfaces with yellow body).
WHITE - (one silver reflective surface with white body).

DEPARTMENTAL MATERIAL SPECIFICATIONS

PAVEMENT MARKERS (REFLECTORIZED)	DMS-4200
TRAFFIC BUTTONS	DMS-4300
EPOXY AND ADHESIVES	DMS-6100
BITUMINOUS ADHESIVE FOR PAVEMENT MARKERS	DMS-6130
PREFABRICATED PAVEMENT MARKINGS-PERMANENT	DMS-8240
PREFABRICATED PAVEMENT MARKINGS-REMOVABLE	DMS-8241
TEMPORARY FLEXIBLE-REFLECTIVE ROADWAY MARKER TABS	DMS-8242

A list of prequalified reflective raised pavement markers, non-reflective traffic buttons, roadway marker tabs and other pavement markings can be found at the Material Producer List web address shown on BC(1).

STANDARD PLANS
Texas Department of Transportation
Traffic Operations Division
BARRICADE AND CONSTRUCTION PAVEMENT MARKINGS STANDARD

 BC(11)-07

© TxDOT DN: - TxDOT CK: - TxDOT DW: - TxDOT CK: - TxDOT

REVISIONS	STATE DISTRICT	FEDERAL REGION	FEDERAL AID PROJECT			SHEET
		6				
	COUNTY		CONTROL	SECTION	JOB	HIGHWAY

PAVEMENT MARKING PATTERNS

CENTER LINE & NO-PASSING ZONE BARRIER LINES FOR TWO-LANE, TWO-WAY HIGHWAYS

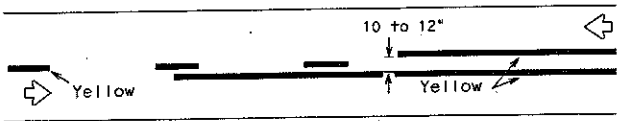

REFLECTORIZED PAVEMENT MARKINGS - PATTERN A

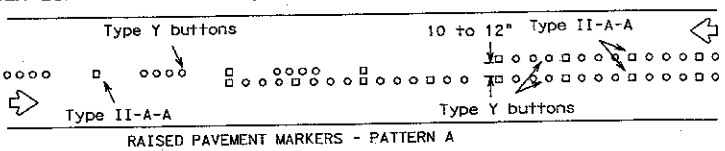

RAISED PAVEMENT MARKERS - PATTERN A

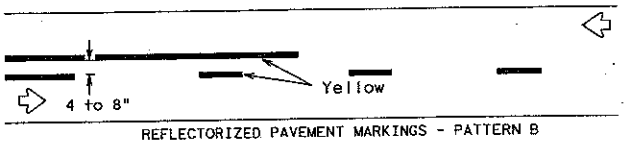

REFLECTORIZED PAVEMENT MARKINGS - PATTERN B

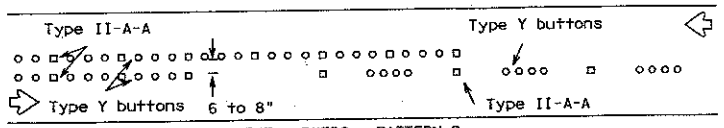

RAISED PAVEMENT MARKERS - PATTERN B

Pattern A is the TXDOT Standard, however Pattern B may be used if approved by the Engineer.
Prefabricated markings may be substituted for reflectorized pavement markings.

EDGE & LANE LINES FOR DIVIDED HIGHWAY

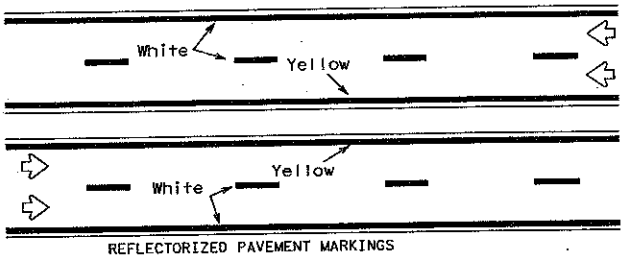

REFLECTORIZED PAVEMENT MARKINGS

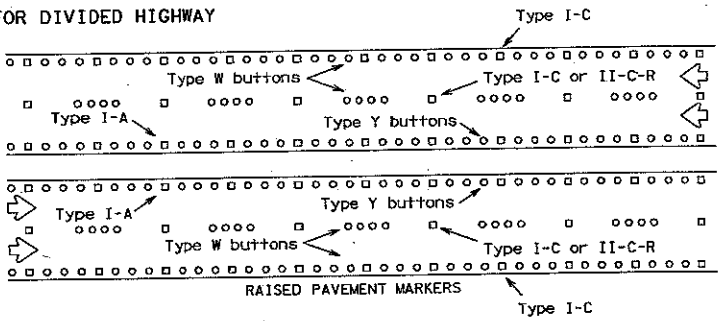

RAISED PAVEMENT MARKERS

Prefabricated markings may be substituted for reflectorized pavement markings.

LANE & CENTER LINES FOR MULTILANE UNDIVIDED HIGHWAYS

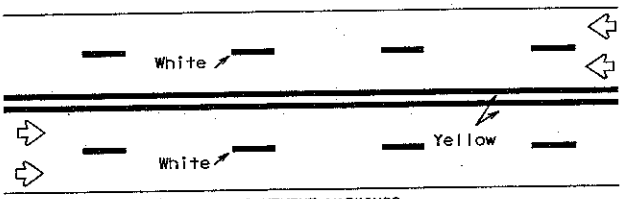

REFLECTORIZED PAVEMENT MARKINGS

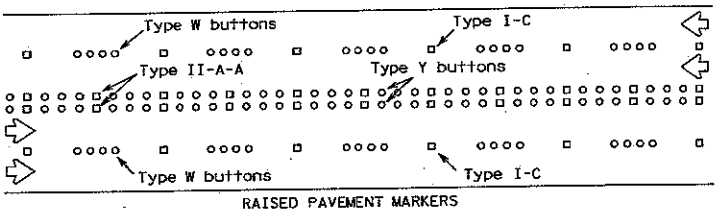

RAISED PAVEMENT MARKERS

Prefabricated markings may be substituted for reflectorized pavement markings.

TWO-WAY LEFT TURN LANE

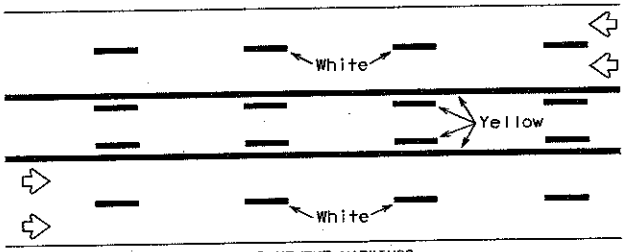

REFLECTORIZED PAVEMENT MARKINGS

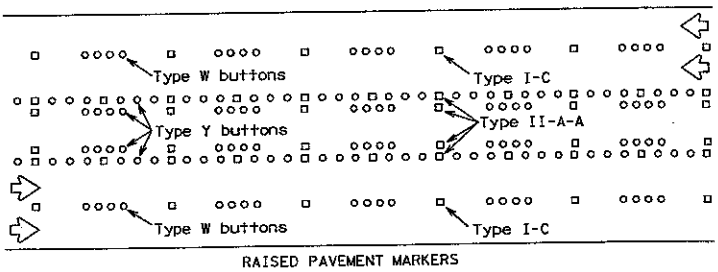

RAISED PAVEMENT MARKERS

Prefabricated markings may be substituted for reflectorized pavement markings.

Raised pavement markers used as standard pavement markings shall be from the approved products list and meet the requirements of Item 672 "RAISED PAVEMENT MARKERS."

STANDARD PLANS
Texas Department of Transportation
Traffic Operations Division

BARRICADE AND CONSTRUCTION PAVEMENT MARKING PATTERNS STANDARD

 BC(12)-07

© TxDOT DN: TxDOT CK: TxDOT DW: TxDOT CK: TxDOT

REVISIONS	STATE DISTRICT	FEDERAL REGION	FEDERAL AID PROJECT	SHEET
		6		
	COUNTY		CONTROL / SECTION / JOB	HIGHWAY

STANDARD WORK ZONE PAVEMENT MARKINGS DETAILS

SOLID LINES

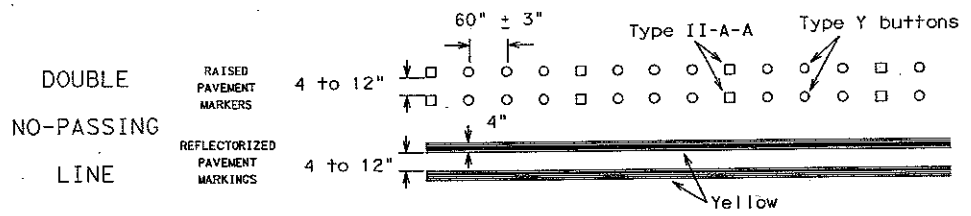

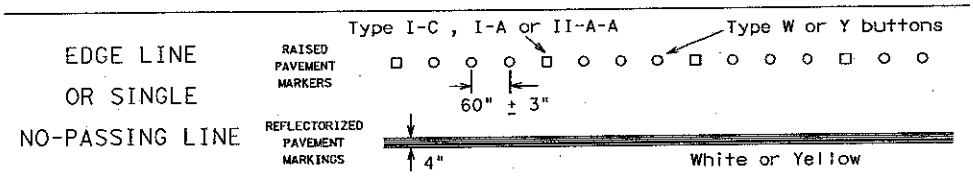

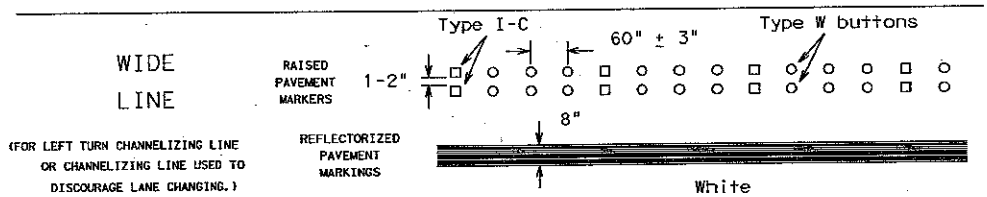

BROKEN LINE

(FOR CENTER LINE OR LANE LINE.)

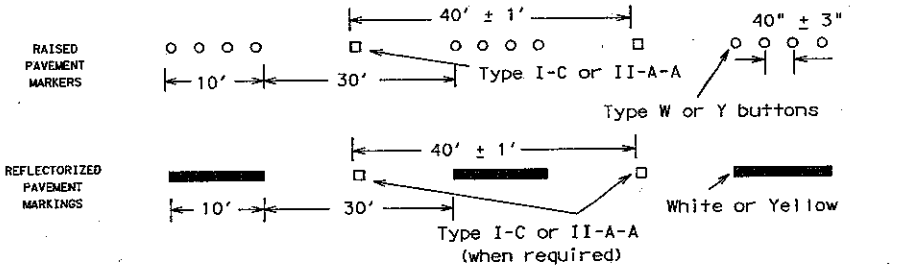

REMOVABLE MARKINGS WITH RAISED PAVEMENT MARKERS

If raised pavement markers are used to supplement REMOVABLE markings, the markers shall be applied to the top of the tape at the approximate mid length of tape used for broken lines or at 20 foot spacing for solid lines. This allows an easier removal of raised pavement markers and tape.

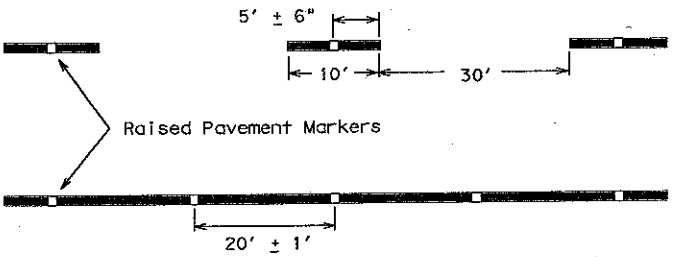

Centerline only - not to be used on edge lines

Raised pavement markers used as standard pavement markings shall be from the approved products list and meet the requirements of Item 672 "RAISED PAVEMENT MARKERS."

STANDARD PLANS
Texas Department of Transportation
Traffic Operations Division

BARRICADE AND CONSTRUCTION PAVEMENT MARKING PATTERNS STANDARD

27 of 27 BC(12)-07

© TxDOT	DN: - TxDOT	CK: - TxDOT	DW: - TxDOT	CK: - TxDOT

REVISIONS	STATE DISTRICT	FEDERAL REGION	FEDERAL AID PROJECT	SHEET
		6		
	COUNTY	CONTROL	SECTION / JOB	HIGHWAY

DISCLAIMER: The use of this standard is governed by the "Texas Engineering Practice Act". No warranty of any kind is made by TxDOT for any purpose whatsoever. TxDOT assumes no responsibility for the conversion of this standard to other formats or for incorrect results or damages resulting from its use.

DATE:
FILE:

I. GENERAL REQUIREMENTS FOR ALL ELECTRICAL WORK

The location of all conductors, conduits, junction boxes, ground boxes, and electrical services is diagrammatic only and may be shifted by the Engineer to accommodate local conditions.

Materials shall be new and unused. Materials and installation shall comply with the applicable provisions of the National Electrical Code (NEC), National Electrical Manufacturers Association (NEMA) standards, and shall be Underwriters Laboratories (UL) Listed unless otherwise shown on the plans or specifications or approved by the Engineer in writing. Faulty fabrication or poor workmanship in any material, equipment, or installation shall be justification for rejection. When reference is made to UL, it can be considered to mean a Nationally Recognized Independent Testing Lab (NRTL). Comparable standards of Canadian Standard Association, Electrical Testing Laboratories or Factory Mutual can be equal to the referenced UL standard. Where reference is made to NEMA listed devices, IEC listed devices shall not be considered to be an acceptable equal to a NEMA listed device. Acceptable devices may have both a NEMA and IEC listing.

With the exception of high strength bolts, miscellaneous nuts, bolts and hardware may be stainless steel when plans specify galvanized, provided that bolts are 1/2 inch or less in diameter. The Contractor shall provide the following electrical test instruments as required by the Engineer to confirm compliance with the contract and the NEC. Those test instruments are voltmeter, amp probe, megger (1000 volt DC) and torque wrenches. All meters shall have been properly calibrated within one year. Calibration certification shall be provided to the Engineer upon request. Calibration certification tag shall also be applied to the meter. The Contractor shall operate meters during inspection as requested by the Engineer. Grounding shall be as shown on the plans and in accordance with the NEC. Metallic conduit, light poles, luminaires on bridge structures, and all metal enclosures shall be bonded to the system-grounding conductor. The ground rod in each ground box or junction box at the bridge ends, and in each ground box installed for underpass lighting will also be bonded to the system grounding conductor. The grounding conductor shall be bare or, if insulated, shall be green. Ground rods, connectors, and bonding jumpers will not be paid for separately, but will be subsidiary to the various bid items.

SUBMITTALS:

The contractor shall submit for approval six (6) copies of catalog cut sheets for each of the following three (3) categories.
Category 1. Electrical services including photocell.
Category 2. Breakaway disconnects, heat shrink tubing, heat shrink filler tape, GelCaps and ground boxes which will include loading capacity certification.
Category 3. Highmast assembly kits, when applicable. See item 614 "Highmast Illumination Assemblies". Submittals shall be legible and shall be marked to indicate which product on a cut sheet is to be supplied. Where manufacturers provide warranties and guarantees as a customary trade practice, the Contractor shall furnish to the State such warranties and guarantees.
Any deviation from plans or specifications, including deviations due to plan error should be prominently displayed on the submittal. Any changes not prominently noted in submittal and incorporated into the work without proper authorization will constitute grounds for rejection of that portion of the work.

II. CONDUIT

A. MATERIALS

1. Conduit and fittings shall be UL Listed for the intended use shown on plan sheets.
2. Conduit shall be the type shown by descriptive code or shown elsewhere on the plans. Substitution of the various types of conduits will not be permitted. All flexible conduit in rigid metallic conduit (RMC) systems shall be Liquidtight Flexible Metal (LFMC) conduit. All flexible conduit in PVC systems shall be Liquidtight Flexible Non-metallic conduit (LFNC).
3. All exposed conduits shall be RMC, unless otherwise specifically shown on the plans. All metal conduit shall be properly grounded.
4. Couplings, connectors, conduit bodies, grounding bushings, and offset nipples for RMC shall be electro-zinc plated steel or hot dipped galvanized malleable iron, threaded or threadless compression type, rain-tight and shall be UL listed for the intended use.
5. Expansion joints for metal conduit shall be provided with an internal or external bonding jumper and shall be UL listed.
6. Unless otherwise shown on the plans, junction box minimum sizes shall be in accordance with the following table which applies to the greatest number of conductors entering the box through one conduit with no more than four conduits per box. When a mixture of conductor sizes are present, the conductors shall be counted as if all are of the larger size. Situations not applicable to the table shall be sized in accordance with NEC 370-28.

AWG	3 CONDUCTORS	5 CONDUCTORS	7 CONDUCTORS
#1	10" x 10" x 4"	12" x 12" x 4"	15" x 16" x 4"
#2	8" x 8" x 4"	10" x 10" x 4"	12" x 12" x 4"
#4	8" x 8" x 4"	10" x 10" x 4"	10" x 10" x 4"
#6	8" x 8" x 4"	8" x 8" x 4"	10" x 10" x 4"
#8	8" x 8" x 4"	8" x 8" x 4"	8" x 8" x 4"

7. RMC system junction boxes equal to or smaller, in any dimension, than 12 x 12 x 6 (HxWxD), surface mounted and containing conductors #8 or larger, shall be hot dipped galvanized cast iron with minimum wall thickness of 3/16 inch, shall have external mounting lugs, and shall be UL listed Crouse-Hinds Type WAB, OZ/Gedney Type YS or approved equal. Unless otherwise shown elsewhere on the plans, RMC system junction boxes larger than the aforementioned boxes but equal to or smaller, in any dimension, than 18 x 18 x 6 (HxWxD) shall be 14-ga. stainless steel; RMC system junction boxes larger than 18 x 18 x 6 (HxWxD) shall be 12-ga. stainless steel. All metal junction boxes shall be equipped with a threaded hole or lug for grounding. Stainless steel boxes 12 x 12 x 6 and larger need not be UL Listed but shall meet the other requirements of the NEC and shall have ribs, stiffeners, or thicker metal and shall have external mounting feet. Junction boxes with an internal volume of more than 100 cu. in. may be supported by connection of two or more rigid metal conduits, where specifically shown on the plans or where approved by the Engineer.
8. Junction boxes containing only #10 or #12 AWG conductors shall be Crouse Hinds Type GRFX, Appleton Type JBOX, two-gang FD, or similar approved cast iron box. Boxes shall be sized according to NEC Table 370-16(d).
9. IMC and EMT conduit shall not be used unless specifically required by the plan layout sheets. Junction boxes in EMT conduit systems shall be made from galvanized sheeting and shall be UL listed and approved for outdoor use, unless otherwise noted on the plans. Sheet metal junction boxes shall be sized in accordance with the NEC. Junction boxes for IMC conduit systems shall meet the requirements of boxes used with RMC systems.
10. Junction boxes in PVC conduit systems shall be PVC, intended for outdoor use, unless otherwise noted on the plans.
11. Elbows in PVC conduit systems one inch and larger shall be rigid metal, with the exception of traffic signal systems which may have PVC elbows instead of rigid. If any part of the rigid metal elbow is buried less than 18 inches underground the elbow and rigid metal extension shall be grounded. Grounding shall be accomplished by means of a grounding bushing installed on the extension. Unless specifically shown on the plans, rigid metal elbows containing, or entering ground boxes containing only communications conductors, loop detectors, or other low voltage power limited circuits need not be grounded unless a ground wire is present in the conduit or ground box. The rigid metal elbows located in concrete foundations may be extended with PVC conduit and need not be grounded provided that the end of the elbow nearest the end of the conduit run exiting the foundation is at least 2 inches below the concrete. RMC elbows will not be eliminated. RMC elbows will not be paid for directly, but will be subsidiary to various bid items.
12. High-Density Polyethylene (HDPE) conduit shall meet the requirements of Item 622, Duct Cable, except that the HDPE conduit, when bid under Item 616, Conduit, shall not contain factory installed conductors. Fittings for HDPE conduit shall be UL listed as an electrical conduit connector or shall be thermally fused using an electrically heated wound wire resistance welding method. HDPE conduit may be substituted for bored schedule 40 or schedule 80 PVC conduit. When such substitution is made, bored HDPE shall be schedule 40 of the size PVC being replaced. The HDPE conduit shall transition to PVC (or RMC elbow when required) at the bore pit. Size and schedule shall be as shown on the plans. Substituted conduit may not be extended to ground boxes or foundations; RMC elbows shall be installed at ground boxes and foundations. RMC elbows will not be eliminated.
13. All conduit support hardware including straps, nuts, bolts, screws, retaining anchors and washers shall be hot dipped galvanized or stainless steel. Strut type conduit straps shall be stainless steel or hot dipped galvanized. Strut type straps need not be made of malleable type material. Stamped-cadmium plated straps will not be allowed. Straps having only one mounting hole shall not be allowed for use on conduits 2 inches and larger with the exception of electrical service poles where stainless steel standoff straps will be allowed. Two piece conduit straps designed to be used with a mounting shoe shall be installed only with the correctly sized shoe.

B. CONSTRUCTION METHODS

1. Conduit in structures shall have expansion fittings at structure expansion joints. All straight runs of RMC conduit exposed on structures such as bridges shall have expansion joints installed at maximum intervals of 150 feet. Expansion joints shall be installed so they allow for movement of the conduit. Installation of the joint in such a manner that will not allow for movement shall be repaired at no expense to the state. The method of determining the final setting length of the expansion joint shall be provided to the Engineer upon request.
2. Conduit supports shall be spaced at maximum intervals of 5 feet. Conduit spacers shall be used with metal conduit placed on surfaces of concrete structures (See conduit mounting options).
3. Conduit supports shall not be attached directly to prestressed concrete beams except as shown specifically in the plans and approved by the Engineer.
4. Unless otherwise shown on the plans, conduit placed beneath existing roadways, driveways, or sidewalks, or after the base or surfacing operation has begun, shall be accomplished by jacking or boring. The Contractor shall back fill and compact the bore pits to the bottom of the conduit prior to installing connecting conduit or duct cable to prevent bending of the connection.
5. Conduit trenched in the subgrade of new roadways shall be backfilled with excavated material, unless otherwise noted on the plans. Conduit trenched in the sub-base of new roadways shall be backfilled with cement-stabilized base.
6. Open ends of all conduit and raceways shall be fitted with temporary caps or plugs to prevent entry of dirt, debris and rodents during construction. The temporary cap may be constructed of duct tape, but in all cases shall be tightly fixed to the conduit and shall be durable. The contractor shall clean out the conduit and prove it clear in accordance with Standard Specifications Item 618.3 prior to installing any conductors.
7. Conduit entry into the top of enclosures such as safety switches, meter cans, service enclosures, auxiliary enclosures and junction boxes shall be made weatherproof using conduit sealing hubs, or threaded bosses.
8. A bonding jumper shall be installed from each grounding bushing to the nearest grounding rod, grounding lug, and/or equipment grounding conductor. All jumpers shall be the same size as equipment grounding conductor. Conduit used as casing under roadways for duct cable need not be grounded if duct extends full length through the casing. At electrical services, grounding electrode conductor shall be a solid Copper #6 AWG.
9. Metal junction boxes shall be bonded to the grounding conductor in accordance with the NEC.
10. Conduits entering ground boxes shall be placed so that the conduit ends shall be not less than 3 inches nor more than 6 inches from bottom of box (See ground box detail on sheet ED(3).
11. Conduit ends shall be sealed with heat shrink boots with waterproof sealant, urethane foam, or by other methods approved by the Engineer. Sealing shall be done after completion of any required pull tests. Duct tape shall not be used as a permanent conduit sealant. Silicone caulking shall not be used as a sealant.
12. All strut mounting material and hardware shall be hot-dip galvanized or shall be stainless steel. The cut ends of strut and non-galvanized rigid metal conduit threads shall be coated with a zinc rich paint (90% or more zinc content). Zinc rich paint may only be used to touch up galvanized material as allowed under Item 445.6 galvanizing. The painting of non-galvanized material with a zinc rich paint shall not be considered as an approved alternative for galvanized materials.
13. All PVC conduit terminations shall be fitted with bushings or bell ends. All metal conduit terminations shall be fitted with a grounding type bushing.

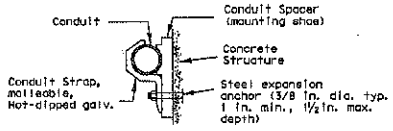

CONDUIT MOUNTING OPTIONS

(Attachment to concrete surfaces)
(See para. II.B.2)

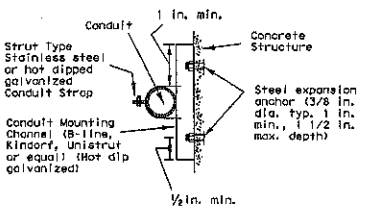

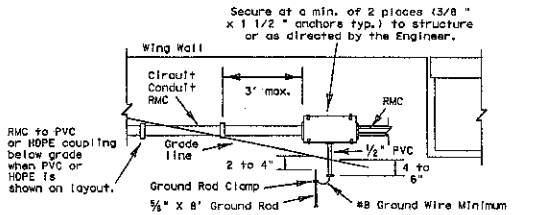

TYPICAL CONDUIT ENTRY TO BRIDGE STRUCTURE DETAIL

NOTES

1.) Ground rod clamp to be UL listed for direct burial.
2.) For conduit placed in structure, use flush-mounted box.
3.) Bond junction box and metal conduits to equipment grounding conductor and grounding electrode conductor using listed connector.
4.) Seal all conduits entering the junction box from underground.
5.) Install bell end or bushing on 1/2 " PVC conduit both ends.
6.) Ground rod to be driven within 8 inches of 1/2 inch PVC conduit end.

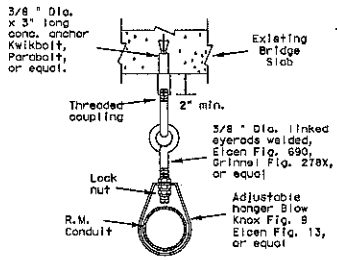

CONDUIT HANGER DETAIL

(Attachment to horizontal surfaces)
Hangers need not be UL listed for electrical use
ie: plumber pipe hangers are acceptable

5/03 Revision

⚠ Revised notes.

Texas Department of Transportation
Traffic Operations Division

ELECTRICAL DETAILS-
CONDUIT

ED(1)-03

© TxDOT January 1992

DN: TxDOT	CK: TxDOT	FW: TxDOT	CK: TxDOT
REVISIONS	CONT	SECT	JOB	HIGHWAY
4-98			
12-00			
3-03			
5-03	DIST	COUNTY	SHEET NO.

DISCLAIMER: The use of this standard is governed by the "Texas Engineering Practice Act". No warranty of any kind is made by TxDOT for any purpose whatsoever. TxDOT assumes no responsibility for the conversion of this standard to other formats or for incorrect results or damages resulting from its use.

I. ELECTRICAL CONDUCTORS

A. MATERIALS

1. Insulated conductors shall be NEC Type XHHW. Insulated conductors shall be color coded in accordance with the NEC, articles 200, 250, and 310; i.e. Insulation of grounded conductors (neutrals) shall be white. Grounding conductors (ground wires) shall be bare or insulation shall be green. Insulation of ungrounded conductors (hots) shall be any color except green, white, or gray. Identification of conductors #6 American Wire Guage (AWG) and smaller shall be by continuous jacket color. Color coding of electrical conductors #4 AWG and larger shall be either by continuous color jacket or by colored tape. Colored tape marker shall consist of a half-lap of tape covering a 6-inch length of conductor.
2. Where two or more circuits are present in one conduit or enclosure, the conductors of each circuit shall be identified by a permanent non-metallic tag at each accessible location. The tag shall be fastened to the conductors by two plastic straps. Each tag shall indicate circuit number, letter, or other identification shown in the plans.
3. Grounding electrode conductor #6 AWG for bonding to ground rod at electrical service, shall be solid. Connection of conductor to ground rod shall be made using UL Listed connectors designed for such purposes.
4. Heat Shrink Tape filler shall be used to seal the ends of heat shrink tubing around two or more conductors that are insulated with heat shrink tubing. Tape material shall have a minimum dielectric strength of 225 volts per mil and shall be cross-linked butyl rubber. Tape shall be supplied in rolls and shall have a backing (release paper) to prevent the tape from sticking to itself.
5. Heat shrink tubing shall be heavy wall, UL listed for 600 volts or greater and shall have factory applied internal sealant.
6. GelCaps shall be UL listed for 600-volt applications. GelCap shall have see-through elastomer molded cover. Cover shall be filled with high dielectric insulating gel silicone sealant to provide waterseal. Cover shall be held in place by snap-lock, molded clamp made of UV stable polypropylene.
7. Splicing materials, insulating materials, breakaway disconnects, GelCaps and fuse holders will not be paid for directly but shall be subsidiary to various bid items.

B. CONSTRUCTION METHODS

1. After conductors have been installed in conduit, a pull test shall be made on conductors. When any length of conductor cannot be freely pulled, the Contractor shall make any needed alterations or repairs at no expense to the State.
2. The Contractor shall perform insulation resistance tests in accordance with Item 620, "Electrical Conductors." The Contractor shall coordinate with the Engineer to witness the tests.
3. A sufficient length of conductor for making up connections shall be left in ground boxes (2 feet minimum, 3 feet maximum, to point of splice, 3 feet minimum, 4 feet maximum, when conductor is pulled through with no splice), enclosures, weatherheads and pole bases (1 foot minimum, 1.5 feet maximum).
4. Splices shall be made only in junction boxes, ground boxes, pole bases, or electrical enclosures and shall be made with listed compression or screw type pressure connectors, terminal blocks, bolted lugs, or split bolt connectors. Splices shall be insulated with heavy wall heat shrink tubing or GelCaps and shall be made so as to provide a watertight splice. Heat shrink sleeve shall overlap conductor insulation a minimum of 2 inches on both sides of the splice. Where heat shrink tubing may not shrink sufficiently to provide a watertight seal around the individual conductors, prior to heating the tubing, the Contractor shall increase the diameter of the conductors insulation using heat shrink filler tape to provide a watertight seal between the individual conductors and the heat shrink tubing. Tape shall be visible after completion of all splices. Where filler tape is used but not visible, the Engineer shall approve each individual splice by conducting a physical inspection of each splice. When it appears the tubing has been burned, or overheated the tubing shall be considered to be defective and shall be replaced.
5. GelCaps when used in place of heat shrink method of splicing, shall be sized and installed according to manufacturer's specifications. (Raychem GelCap and GelCap SL or equal.)
6. Wire nuts may be used for #8 AWG or smaller conductors in above-ground junction boxes, but not in pole bases or ground boxes. Wire nuts shall be positioned upright to prevent the accumulation of water. Wire nuts used at these locations shall have factory applied waterproof sealant.
7. Conductors in illumination poles shall be supported by a J-hook in the top of the pole.
8. All conductors bid under Item 620 "Electrical Conductors" shall have breakaway electrical disconnects installed anytime conductors pass through a break-away support device.
9. For terminating the conductors, insulation-jacketing material shall be removed in such a manner as to not nick any of the individual strands of the conductor. When individual conductor strands are removed, the conductor shall be considered to be damaged.
10. When a conductor or cable has been damaged, or fails to pass an insulation resistance test, the conductor shall be replaced.
11. Duct tape, black electrical tape, or wire nuts shall not be used in the repair of a damaged conductor.
12. For terminations, no more than one wire may be installed under a single pressure connector, unless the device is listed for more than one wire.
13. Conductors connected to break-away in line fuse holders must be installed in accordance with the specific manufacturer's installation instructions. Where threaded connections are made, they shall be properly torqued. Where crimp type connections are made, crimps shall be made using properly sized crimping pliers. Proper conductor terminations are critical to the safe operation of break-away devices.
14. Waterproofing boots shall be properly trimmed to fit snugly around the conductor so as to provide a water proof connection. No more than one wire may enter a single opening in any one boot. Water proofing boots must provide the correct number of openings. Where only one wire is to be connected to a boot, the boot may not be a two wire type.

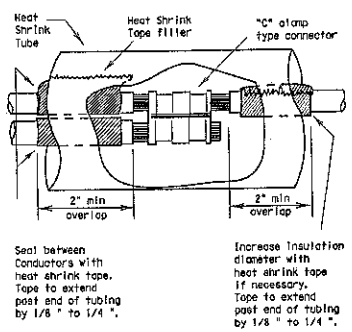

SPLICE OPTION 1

C-CLAMP

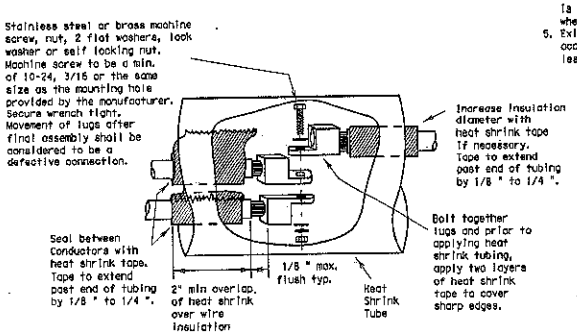

SPLICE OPTION 2

BOLTED WIRE LUGS

SPLICE OPTION 3

SPLIT BOLT

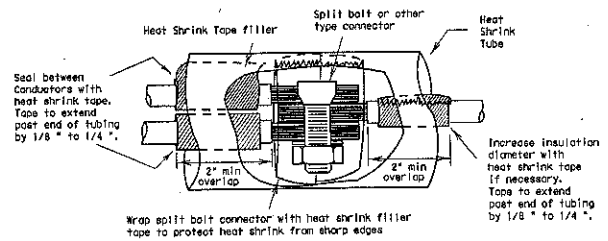

SPLICE OPTION 4

GELCAP

GelCap shall be sized and installed according to manufacturer's specifications

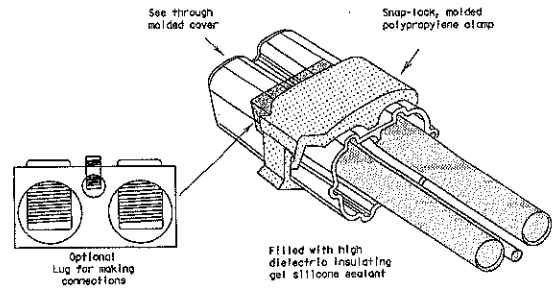

15. All conduits that contain circuit wiring of 50 volts or more shall contain an equipment grounding conductor (EGC). Conduit for traffic signals shall have an EGC, with a minimum size of #8 AWG stranded. Unless otherwise shown on the plans, the EGC for all other conduits shall be the same AWG size as the largest current carrying conductor contained in that conduit. The EGC shall be paid for in Item 620-Electrical Conductors.

C. TEMPORARY WIRING

1. Temporary conductors and electrical equipment to provide power for utilization equipment, shall be installed in accordance with the NEC article 305. All temporary wiring materials and methods shall comply with the standard sheets. All power outlets for portable electrical equipment, power tools, ice machines, ice storage bins and refrigerators located outdoors at grade, supplied from a utility power source, shall be provided with a ground fault circuit interrupter.
2. Residual current protective devices (GFCI) may be any one of the following: molded cord and plug set, receptacle, or circuit breaker type.
3. Where wire nuts are approved for temporary wiring, they shall be of the self-sealing type.
4. All conductor splices must be contained within a listed enclosure, ground box or the splices will be more than ten feet above grade vertically and more than five feet horizontally from any metal structure. Where temporary conductors are installed in any area that is likely to be subjected to vehicle traffic, or mobile construction equipment, the vertical clearance to ground shall be at least 18 feet when measured at the lowest point. Where power conductors are to be supported by a span wire, the span wire shall be properly grounded.
5. Existing conduit containing service conductors uncovered during the construction process shall be repaired in a timely manner in accordance with the NEC. Existing non-metallic conduit exposed during construction shall not be left exposed above grade, or with less than eighteen inches of cover, without protective methods approved by the Engineer.

Texas Department of Transportation
Traffic Operations Division

ELECTRICAL DETAILS-
CONDUCTORS

ED(2)-03

© TxDOT January 1992

REVISIONS	DN: TxDOT	CK: TxDOT	DW: TxDOT	CK: TxDOT
10-93	DIST	SECT	JOB	HIGHWAY
4-98				
12-00				
3-03	DIST	COUNTY		SHEET NO.

71B

DATE:
FILE:

DISCLAIMER: The use of this standard is governed by the "Texas Engineering Practice Act". No warranty of any kind is made by TxDOT for any purpose whatsoever. TxDOT assumes no responsibility for the consequence of this standard to other formats or for incorrect results or damages resulting from its use.

II. GROUND RODS

A. MATERIALS

1. All ground rods installed at electrical services, including supplemental lightning protection ground rods specified by the plans in other locations such as pole bases, shall be copper clad and UL listed. Rods shall be a minimum diameter of 5/8 inch. The length shall be a minimum of 8 feet. Larger diameter or longer length rods may be called for in some specific locations, see the individual plans sheets.
2. Ground rod clamps shall be listed to be in direct contact with the soil. Where concrete encasement is required, the clamp shall be listed for concrete encasement.

B. CONSTRUCTION METHODS

1. Ground rods installed in locations such as pole bases, to provide supplemental lightning protection need not be totally in contact with the soil. Where called for in the plans, rods may be encased in soil or concrete or any combination of soil and concrete. When concrete encased, the connection of the conductor to the rod shall be readily accessible for inspection or repairs. When driven into the soil the upper end shall be between 2 to 4 inches below finished grade. Ground rods shall not be placed in the same drilled hole as a timber pole.
2. Ground rods shall be installed such that the end imprinted with the rod's part number is installed as being the upper end.
3. Non-conductive coatings such as concrete splatter shall be removed from the rod at the clamp location.
4. Routing of lightning protection ground rod wires shall be run as short and straight as possible. Where bends are required they shall have a minimum radius of four inches.
5. Unless specifically called for by the plans, conduits used for ground rod wires shall be non-metallic. Where metal conduits are specified, a grounding bushing and properly sized bonding jumper shall be provided and properly installed on each end.
6. Where rocky soil or a solid rock bottom is encountered when driving a ground rod and the horizontal trench placement method is the only viable solution, written authorization from the Engineer must be obtained.

III. GROUND BOX

A. MATERIALS

1. Ground boxes 16x30x24 inches (WxLxD) or smaller shall be polymer concrete of the type required by the descriptive code shown elsewhere. Larger ground boxes shall be as shown elsewhere in the plans.
2. All ground boxes and covers shall be permanently marked either by impress or by permanent ink, with manufacturer's model number and manufacturer's name or logo.
3. Covers shall be bolted down, and bolt holes in the box shall be arranged to drain dirt.
4. Ground box Types A, B, C, D & E shall meet the following requirements:
   a. Ground boxes and covers be manufactured from polymer concrete reinforced with continuous strands of woven or stitched bonsilicate fiberglass cloth. The polymer concrete shall be made from catalyzed polyester resin, sand and aggregate, and shall have a minimum compressive strength of 11,000 psi. Polymer concrete containing chopped fiberglass or fiberglass reinforced plastic is not acceptable.
   b. Minimum inside dimensions shall be as follows (width x length x depth):
      Type A shall be 11.5 inches x 21 inches x 10 inches, (122311)
      Type B shall be 11.5 inches x 21 inches x 20 inches, (122322)
      Type C shall be 15.25 inches x 28.25 inches x 10 inches, (162911)
      Type D shall be 15.25 inches x 28.25 inches x 20 inches, (162922)
      Type E shall be 11.5 inches x 21 inches x 16 inches, (122317)
   c. Bottom edge of box or extension shall be footed with a minimum 1 1/4 inch flange.
   d. Ground boxes shall withstand 800 lbs. per sq. ft. applied over the entire sidewalk with less than 1/4 inch deflection per foot length of box. Ground boxes and covers shall withstand a test loading of 20,000 lbs. over a 10 inch by 10 inch area centered on the cover with less than 1/2 inch deflection. Ground boxes and covers shall meet Western Underground Standards 3.6. Manufacturer shall supply certification by an independent laboratory or sealed by a Texas-Licensed Professional Engineer.
   e. Covers shall be 2 inch (nominal) thick polymer concrete. All hardware shall be stainless steel. Cover shall be secured with two 1/2 inch stainless steel bolts. Bolts shall be self-retaining and shall withstand a minimum of 70 ft-lbs. torque and shall have a minimum 750 lbs. straight pull out strength. Nuts shall be floating and shall provide a minimum of 1/2 inch movement from the center of the nut. Covers shall be skid resistant, minimum 0.5 coefficient of friction. Covers shall be interchangeable between manufacturers and shall conform to the dimensions shown herein. Unless otherwise approved by the Engineer, cover shall be legibly imprinted with the following words in minimum 1 inch letters:
      Ground Boxes containing wiring for traffic signals shall be labeled, Danger High Voltage Traffic Signal.
      Ground boxes containing wiring for illumination systems shall be labeled, Danger High Voltage Illumination.
      Ground boxes containing wiring for traffic management systems shall be labeled, Danger High Voltage Traffic Management.
      Ground boxes containing wiring for sign illumination systems shall be labeled, Danger High Voltage Sign Illumination.
      Ground boxes containing wiring for traffic signals that also contain illumination, powered by the signal electrical service, shall be labeled, Danger High Voltage Traffic Signal.

B. CONSTRUCTION METHODS

1. Ground boxes shall be set on a 9 inch (minimum) bed of aggregate from 3/4 " up to 2" in size. Aggregate shall be in place prior to setting box and conduits shall be capped. Any gravel or dirt in conduit shall be removed.
2. When required by item descriptive code, construction of an apron encasing a ground box including concrete and reinforcing steel shall not be paid for directly but shall be subsidiary to the ground box. Reinforcing steel may be field bent. Concrete for aprons shall be considered miscellaneous concrete for testing purposes. Aprons shall be cast in place.
3. Conduit holes may be cut in the walls of type B & D boxes at least 18 inches beneath the cover.
4. If, within the limits of this project, the Contractor must utilize an existing ground box equipped with a metal cover, the Contractor shall bond the cover to the grounding conductor with a 3 foot long flexible stranded jumper the same size as the grounding conductor. Connection of bonding jumper to metal ground cover shall not be paid for directly but shall be subsidiary to various bid items. The box(es) must be clearly shown on the plans with plan notes fully describing the work required.
5. If there are other ground boxes with metal covers within the project limits but not involved in the contract, the Engineer may direct the Contractor to ground the covers, designating and identifying the specific boxes in writing. This work will be paid for separately.
6. Termination to metal ground box covers shall be made using a tank ground type lug.

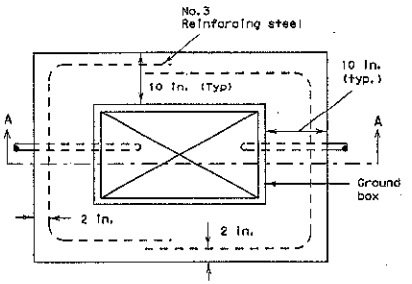

PLAN VIEW

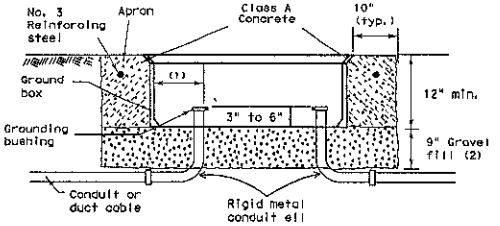

SECTION A - A

APRON FOR GROUND BOXES

(Where required)

(1) Final position of end of conduit shall not exceed one-half the distance to the side of box opposite the conduit entry.
(2) Place gravel "under" the box, not "in" the box. Gravel should not encroach on the interior volume of the box.
(3) Install bushing on the upper end of all ells.
(4) Where a ground rod is present in the ground box, connect it to any and all equipment grounding conductors using a listed connector.
(5) Maintain sufficient space between all conduits so as to allow for proper installation of bushings.
(6) All conduits shall be installed in a neat and workmanlike manner.
(7) All conduits installed in the ground box shall be sealed after completion of conductor installation and any required pull tests. Silicone shall not be used as sealant.

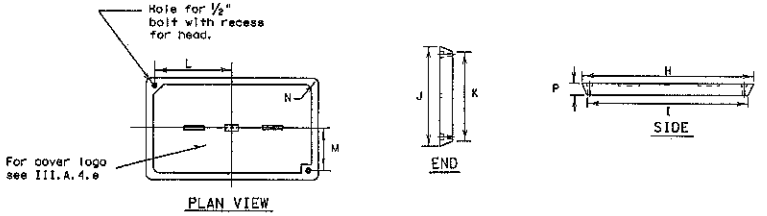

PLAN VIEW

END

SIDE

GROUND BOX COVER

GROUND BOX COVER DIMENSIONS								
BOX	DIMENSIONS (INCHES)							
SIZE	H	I	J	K	L	M	N	P
A, B & E	23 1/4	23	13 3/4	13 1/2	9 1/8	5 1/8	1 3/8	2
C & D	30 1/2	30 1/4	17 1/2	17 1/4	13 1/4	6 3/4	1 3/8	2

5/03 Revision

⚠ Revised notes.

Texas Department of Transportation
Traffic Operations Division

ELECTRICAL DETAILS- GROUND BOXES

ED(3)-03

©TxDOT January 1992

DATE	REVISIONS
4-98	
12-00	
3-03	
5-03	

DN: TxDOT	CK: TxDOT	DW: TxDOT	CK: TxDOT
CONT	SECT	JOB	HIGHWAY
DIST	COUNTY		SHEET NO.

71C

DATE:
FILE:

DISCLAIMER: The use of this standard is governed by the "Texas Engineering Practice Act". No warranty of any kind is made by TxDOT for any purpose whatsoever. TxDOT assumes no responsibility for the conversion of this standard to other formats or for incorrect results or damages resulting from its use.

DATE:
FILE:

ELECTRICAL SERVICES NOTES

All work, materials, services, and incidentals, whether or not specifically shown on the plans, which may be necessary for a complete and proper electrical service installation as specified in the plans to obtain electrical power shall be paid for, performed, furnished and installed by the Contractor. The Contractor shall contact the Utility for metering and shall comply with all Utility requirements.

Primary line extensions, connection charges, meter charges, and other charges by the Utility company to provide power to the location shown, when required, shall be paid for under force account work. The costs associated with these charges shall be approved by the Engineer prior to engaging the Utility company to do the work. The Contractor shall consult with the appropriate Utility to determine costs and requirements, and shall coordinate the Utility's work as approved by the Engineer. The Contractor shall be reimbursed only the amount billed by the Utility. No additional amount for supervision of the Utility's work will be paid.

Materials shall be new and unused, materials and installation shall comply with the applicable provisions of the National Electrical Code (NEC) and National Electrical Manufacturers Association (NEMA) standards and shall be Underwriters Laboratories (UL) Listed. Electrical Service conduits, conductors, disconnects, contactors, circuit breaker panel sizes, and branch circuit breakers, shall be as shown in the Electrical Service Data elsewhere in the plans. Faulty fabrication or poor workmanship in any material, equipment, or installation shall be justification for rejection.

The Contractor shall submit for approval no less than six (6) copies of catalog cut sheets on electrical service materials. Submittals shall be legible and shall be marked to indicate which product on a cut-sheet is to be supplied. Where manufacturers provide warranties and guarantees as a customary trade practice, Contractor shall furnish to the State such warranties or guarantees.

The Contractor shall provide locks keyed with Master #2195 for all lockable electrical enclosures. Keys and locks become property of the State. Unless otherwise approved by the Engineer, enclosures shall not be energized until locks are provided and all bolts are installed.

Circuit directories, where provided, shall be filled out. All breakers and components in shop built panels and enclosures shall be labeled with dual-colored plastic labels. Letters shall be a minimum 3/8 " in height.

Enclosures with external disconnects that de-energize all equipment inside the enclosure, need not have dead front trim, except that incoming line terminations shall be protected from incidental contact.

When galvanized is specified for nuts, screws, bolts or miscellaneous hardware, stainless steel may be used. All wiring and components shall be rated for 75 degrees C. Minimum size for service entrance conductors shall be #6 XHHW.

I. Safety Switch. A safety switch, placed ahead of the meter, shall only be used when specified by the Utility and when shown on the Electrical Service Data. The switch shall be UL Listed, heavy duty type, 600 volt, unfused, with a UL type 3R enclosure and equipped with a solid neutral (s/n) assembly. The switch shall be padlockable in the "on" position.

II. Service Type. Electrical service types A, C, D, and T shall be as schematically detailed on ED(4) or ED(5). Other service types shall be as detailed elsewhere on the plans.

III. Branch Circuit Breakers. Circuit breakers shall be thermal magnetic and have a minimum interrupting capacity of 10,000 amps and a voltage rating compatible with their use. Circuit breakers shall be sized as shown in the electrical service data. Circuit breakers in panelboards and load centers shall be full size and designed exclusively for the panelboard or load center in use. Tandem and half-width breakers shall not be used. All circuit breakers shall be permanently and clearly marked identifying the circuit or device supplied. Circuit breakers shall be UL Listed to UL489.

IV. Circuit Breaker Panelboard. Panelboards shall be UL Listed. Panelboards shall have copper busses, a minimum of 6 one-pole spaces or as required in the electrical service data, and when required will be rated for service equipment. Enclosure shall meet or exceed UL type 3R classification. Panelboards shall have a threaded hub conduit entry for conduit entering the top of the enclosure. Circuit breakers shall be bolt-in type only.

V. Circuit Breaker Load Center. Load centers shall be UL Listed. Load center will have copper bus only. Load center will have load centers for type T services may have copper or aluminum busses, all other load centers will be copper bus only. Load centers a minimum of 4 one-pole spaces, and shall be rated for service equipment. Enclosure shall meet UL type 3R classification. Load centers shall have a threaded hub conduit entry for conduit entering the top of the enclosure. Circuit breakers shall be plug-in type only. Load centers for type T services shall accomodate a maximum of 6 one-pole breakers.

VI. Separate or Auxiliary Enclosure. Separate enclosures for HOA, photocell and lighting contactors for types D & T Services shall be a UL Listed assembly with outer door. Interior shall have dead front trim. HOA switch operator shall extend through the dead front trim. Photocell shall be mounted inside the enclosure as described in paragraph XIII when required by descriptive code. Separate enclosures shall meet the construction requirements of paragraph VIII. E, except that separate enclosure shall not have external operating handle, need not have a data pocket and door may latch at only one point. All equipment may be located in one enclosure instead of two, when approved by the Engineer.

VII. Where a Type D or T service is provided, laminated "as built" drawings are required as shown on ED(5) VIII E; shall be delivered before completion of the work, to the Engineer in lieu of placement within these smaller enclosures. Conduit may not enter the back wall of a service enclosure penetrating the equipment mounting panel. Provide grounding bushings on all metal conduits, terminate bonding jumper to grounding bus. Grounding bushing is not required when the end of the metal conduit is fitted with a conduit sealing hub or threaded boss such as a meter base.

EXPLANATION OF ELECTRICAL SERVICE DESCRIPTIVE CODE

ELEC SERV TY X (XXX/XXX) XXX (XX) XX (X) XX (X)

Example: ELEC SERV TY A(240/480)100(NS)SS(E)GC(O)

Schematic Type

Service Voltage (V / V)

Disconnect Amp Rating
(000 indicates main lug only)

SS= Safety switch ahead of meter
NS= No switch ahead of meter and/or no meter required

Enclosure Type
GS= Galvanized steel (see ED(5)VIII,D)
SS= Stainless steel
AL= Aluminum

Photocell Mounting Location
T= Top of pole
E= Inside service/separate enclosure
L= Luminaire mounted
N= None

Service Support Type
GC= Granite concrete
OC= Other concrete
TP= Timber pole
SP= Steel pole
SF= Steel frame
OT= Pole by others or paid for separately
EX= Existing pole
TS= Switch gear to be placed on traffic signal pole
RT= Rectangular structural tubing
PS= Pedestal Service (see ED(5)VIII,G)

O= Overhead service
U= Underground service

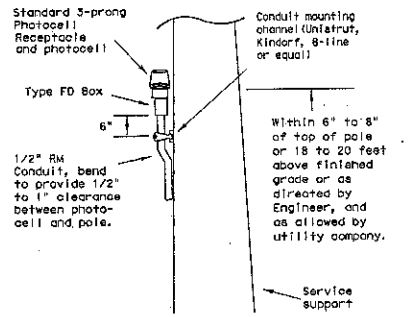

TOP MOUNTED PHOTOCELL

Conduit support spacing 3 feet from enclosure; 5 feet max.

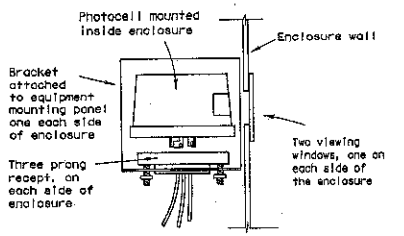

ENCLOSURE MOUNTED PHOTOCELL

For photocell specifications see ED(5),XIII.

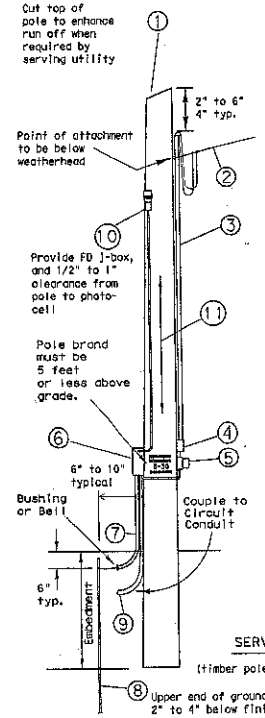

1 - Class 5 pole, height as required
2 - Service drop from utility company (attached below weatherhead)
3 - Service conduit and service entrance conductors(RMC) (See Electrical Service Data)
4 - Safety switch (when required)
5 - Meter (when required)
6 - Service enclosure
7 - No. 6 bare grounding electrode conductor in 1/2 " PVC to ground rod - extend 1/2 " PVC 6" underground.
8 - 5/8 " x 8' Copper clad ground rod - drive ground rod completely underground unless otherwise approved by the Engineer.
9 - RM conduit - same size as branch circuit conduit.
10 - Photocell and conduit - if top mounted. (See Electrical Service Data)
11 - When required by the serving utility provide bare #6 awg copper conductor. Run wire from pole top to butt wrap or copper butt plate. Protect conductor to a height of 8 ft above finish grade.

LIQUIDTIGHT FLEXIBLE METAL CONDUIT (LFMC)

(If applicable)

- Liquidtight flexible metal conduit, may be used when meter and service enclosure are mounted 90 to 180 degrees to each other. Size shall be same as service entrance conduit.
- LFMC shall not exceed 3 ft. and shall be securely supported within one ft. of each end. No strap required for LFMC shorter than 12"
- Each end of LFMC must have a grounding bushing or be terminated with a grounding fitting.
- A neutral conductor must be installed within the LFMC.
- Bend in liquidtight flexible metal conduit shall not exceed 180 degrees.
- A pull test is required on all installed conductors, at least six inches of free conductor movement shall be demonstrated to the satisfaction of the Engineer.

SERVICE SUPPORT TYPE TP (O)

(timber pole, overhead service, typical arrangement)

TIMBER POLE NOTES

1. Conduit and electrical conductors attached to the electrical service pole and underground within 12 inches of service pole shall not be paid for directly but shall be subsidiary to the service pole.
2. Pole top mounted photocell, install on north side of pole or in service enclosure as required. See Electrical Service Data.
3. Attach meter and service equipment with stainless steel or galvanized channel (Unistrut, Kindorf, or equal). Gain pole as required to provide flat surfaces for each strut. Paint ends of galvanized channel with zinc rich paint. Gain depth 5/8" max. Gain height 1 7/8" max. Strut to be 1" max. deep, and 1 5/8" wide max. Secure each strut section to timber pole with two galvanized or SS lag bolts, 1/4" diameter min. by 1 1/2" length min. Place flat cut galvanized or SS washer on each lag bolt. Gain pole in a neat and workmanlike manner.
4. Embedment depth shall be as required in Item 527 Treated Timber Poles.
5. Poles trimmed for excess length shall be trimmed from the top end only.

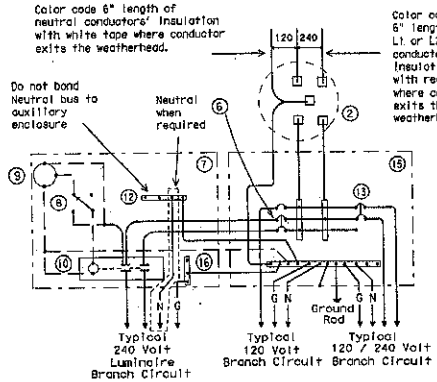

SCHEMATIC TYPE T

120/240 VOLTS - THREE WIRE

Install photocell and lighting contactor when shown on Electrical Service Data.

SCHEMATIC LEGEND

1 - omitted
2 - Meter (when required)
3 - Service Assembly Enclosure
4 - Main Disconnect Breaker (Not Used)
5 - Omit
6 - Circuit Breaker, 15 Amp typical for control circuit wiring
7 - Auxiliary Enclosure
8 - Control Station ("H-O-A" Switch)
9 - Photo Electric Control (enclosure-mounted shown)
10 - Lighting Contactor
11 - Power Distribution Terminal Blocks (Not Used)
12 - Neutral Bus required when 120 V. lights are controlled by lighting contactor
13 - Branch Circuit Breaker (See Electrical Service Data)
14 - Circuit Breaker Panelboard (Not Used)
15 - Load Center
16 - Ground Bus

Power Wiring
Control Wiring
N Neutral Conductor (when required to serve 120 V. loads only)
G Equipment grounding conductor-always required

Texas Department of Transportation
Traffic Operations Division

ELECTRICAL DETAILS- SERVICE SCHEMATICS AND SUPPORT-TYPE TP (OVERHEAD)

ED(4)-03

© TxDOT April 1998

12-00	REVISIONS	DN: TxDOT	CK: TxDOT	DW: TxDOT	CK: TxDOT
3-03		CONT	SECT	JOB	HIGHWAY
		DIST		COUNTY	SHEET NO.

7.1D

DISCLAIMER: The use of this standard is governed by the "Texas Engineering Practice Act". No warranty of any kind is made by TxDOT for any purpose whatsoever. TxDOT assumes no responsibility for the conversion of this standard to other formats or for incorrect results or damages resulting from its use.

DATE:
FILE:

SERVICE ENCLOSURE NOTES

VIII. Service Assembly Enclosures. All service assemblies and enclosures shall be UL Listed for the intended purpose.

A. Shop built or shop assembled service assemblies (all types except Type T and Type D without lighting contactor or enclosure mounted photo cell) and all auxiliary equipment enclosures mounted with service equipment and paid for as part of Item 625, "Electrical Services", shall be built or assembled by a UL Listed Industrial Control Panel shop and shall have a unique serial numbered UL Label with the words "LISTED ENCLOSED INDUSTRIAL CONTROL PANEL". The same or an additional label shall have the name, location, and phone number of the shop, the UL file number of the shop, the shop order or drawing number, date of manufacture or assembly, and the line voltage. The service assembly enclosure shall also be labeled "SUITABLE ONLY FOR USE AS SERVICE EQUIPMENT".

B. Conduit entries into the top of enclosures shall have threaded hub. Conduit entries through the equipment mounting back plate will not be allowed.

C. All service enclosure front doors shall be permanently labeled "DANGER HIGH VOLTAGE". Label shall be a self sticking type, intended for outdoor installation. Lettering style, layout and colors of red, black and white shall be as required by OSHA. Label letters shall be 1 to 1 1/2 inches high or as high as the enclosure door width will permit for smaller services. Separate or auxiliary lighting enclosures need not be OSHA labeled when mounted in the same viewing plane as the service enclosure front door. Where only one type of load is served by the service, the service door shall be marked using duo-colored plastic labels or self adhesive vinyl weather resistant labels, minimum of 1 inch high, applied in a neat and workmanlike manner. On the label will be the service number shown on the plans as well as identifying the load served specifically (i.e. lighting, landscaping, signals, traffic management or other wording as directed by the Engineer). Safety switches need not be OSHA labeled unless specifically required by the serving utility.

D. Type GS enclosures will only be allowed for service Types D and T without an enclosure mounted photocell and/or lighting contactor and the Type C panelboard. This spec will allow an "off the shelf" product meeting these specifications to be used. Type GS enclosures shall be made from pre-galvanized steel sheeting, hot dipped galvanized steel, or powder coat painted steel unless shown differently on the plans. Steel enclosures shall be painted inside and outside; galvanized enclosures may be painted. Unless otherwise approved by the Engineer, painted enclosures shall be gray, beige, white or light green. Panelboard/loadcenter enclosures shall meet UL type 3R requirements, shall have a dead front trim, and an outer padlockable door preventing unauthorized persons from operating contained equipment. Galvanized steel is no longer allowed for Types A, C, or custom-built D or T enclosures. If GS is shown in the descriptive code for any of these, an AL shall be provided.

E. Type AL enclosures for service Types A and C shall meet UL type 3R requirements and shall also meet additional requirements of this paragraph. The enclosure shall have both a main disconnect remote operator handle and a door latch handle. Die-cast handles are not acceptable. The main disconnect remote operator shall be flange-mounted, shall interlock the door when in the "on" position, and shall be padlockable in both the "on" or "off" positions. Door latch shall latch at two or more points, operate by a handle separate from disconnect switch and be capable of being locked. Door closure clamps will not be allowed. Lock must be keyed to Master #2195. All the enclosures shall have either a continuous stainless steel piano hinge with stainless steel pin or enclosures less than 30 inches may have two heavy duty hinges, those over 30 inches must have three. Heavy duty two and three point hinges shall have a 0.185 inch minimum diameter electro-zinc plated steel pin or a stainless steel pin. Two point hinged doors shall be rated for 56 lbs of loading. Three point hinged doors shall be rated for 70 lbs of loading. The door shall have an attached data pocket constructed of either thermoplastic or metal. Pocket shall be 12" x 12", unless that size will not fit in enclosure. The pocket shall then be as large as possible, as approved by the Engineer, and mechanically attached with stainless steel rivets or aluminum rivets. Enclosure shall include an equipment mounting panel installed inside the enclosure on collar studs or tapped bosses, and constructed of a minimum 12 guage galvanized steel. Equipment mounting panels shall not be painted. Enclosure shall have factory installed external mounting feet. Enclosure door shall be capable of opening at least 130 degrees, with arm or other approved means to hold the door open. Only the enclosure exterior will be primed and painted. Paint color shall be beige or gray and shall be powder coat paint as shown below. Condensation drainage shall be provided in the bottom of the enclosure before leaving the factory. The Contractor shall prepare and submit a schematic drawing unique to an individual service. The approved drawing shall be laminated and placed in the document pocket of the service at the time of shipment to the job site. All applicable wiring diagrams and plan sheet layouts for all equipment and branch breaker circuits supplied by that service shall also be laminated and placed in the document pocket prior to shipping. Type AL enclosures for Type D and T services with enclosure mounted photocell and/or lighting contactor shall have the loadcenter interior mounted in an enclosure with properly adapted dead front trim. Types D and T shall not have a loadcenter exterior "can" mounted inside another enclosure meeting these specifications. (Do not put one enclosure inside another enclosure). Types D and T with enclosure mounted photocell and/or lighting contactor shall meet the additional requirements of this paragraph except that remote-operating handle will not be provided.

F. Type SS enclosures for Type A and C shall meet all the requirements above for their respective type AL. Type SS enclosures for D and T shall meet all the requirements above for their respective type AL. Stainless Steel shall not be painted.

G. PS enclosure shall be as detailed and specified on ED(9). Galvanized steel will not be allowed for any pedestal service. If GS is shown in the descriptive code on AL will be provided.

IX. Powder Coat Paint. Powder coating shall be either a polyester thermosetting resin, a zinc rich primer with a TGIC (triglycidyl isocyanurate) powder overcoating, or a zinc-rich epoxy powder, applied by either electrostatic spray or fluidized bed immersion, high temperature oven cured, high density, low gloss, 4 mil thick (minimum), coating. Adhesion shall meet the 5A or 5B classifications of ASTM D3359. Finish shall be uniform in appearance and free of scratches.

X. Main Disconnect. Main disconnect device shall be a circuit breaker, as specified in the Electrical Service Data, shall be two or three pole, and rated for the voltage and amperage specified. Circuit breaker shall be an UL Listed thermal-magnetic circuit breaker controlled by flange-mounted remote operator in the service assembly enclosure when required. Circuit breakers shall have a minimum interrupting rating of 10,000 Amps. When the utility company provides a transformer larger than 50 KVA, Contractor shall verify that the available fault current is less than the circuit breaker amps interrupting capacity (AIC) rating and shall provide documentation from the Utility to the Engineer. Documentation shall be submitted at the same time as other electrical submittals. Circuit breaker shall be UL Listed to UL489. No bolted breakers will be allowed for use as a main disconnect.

XI. Control Circuit. Control circuit protection shall be 15 amp circuit breaker.

XII. Control Station ("H-O-A" Switch). Control station shall be a maintained-contact, three position selector switch in an UL type enclosure. Switch shall be rated 600 volts and shall be fitted with "Hand-Off-Auto" legend.

XIII. Photo Electric Control. Photo electric control shall consist of a photocell, internal lightning arrester, and relay or bimetallic switch mounted inside a weatherproof enclosure with standard 3-prong twist lock photocell plug and receptacle. The enclosure shall be made of poly-acrylic with clear acrylic window. Enclosure chassis shall be molded thermosetting plastic. The photocell shall have a polyethylene gasket, and shall have a hermetically sealed cadmium sulfide cell. The arrester shall have an enclosed type expulsion arrester rated 2.0 kV sparkover with 5,000 amps follow-through. Relay or switch shall be time delay type with normally closed contacts. Photo electric control shall be rated a minimum of 1800 VA, voltage as required. Enclosure mounted photocells shall be the same as above except that the photocell shall be mounted inside the enclosure. The enclosure shall have two acrylic paned windows, or other material approved by the Engineer, one on each side of the enclosure. Each window shall be rectangular approximately one inch by two inches, round 2 inch diameter, or as otherwise approved by the Engineer. Bracket and photocell's receptacle will be mounted inside enclosure next to each window. Except for window side, 2" of clearance is required on all sides of photocell for ease of replacement. The photocell's receptacle is held in place by two mounting screws on bracket and located next to each window of the enclosure. The 3-prong twist lock photocell shall be mounted in a position to receive light from the window closest to the photocell. The photocell shall be mounted in a position to receive light from one window. Top of pole mounted photocells shall be mounted as shown on ED(4). The Contractor shall be responsible for proper operation of the photo-electric control. The Contractor shall move and/or adjust or shield the photocell from stray or ambient nighttime light or shall make any other adjustments required for proper operation. The photocell shall face North when practicable. Unless otherwise shown on the plans, the photocell shall turn on the illumination system at 1.0 +(-) 0.5 footcandle and turn off the illumination system at two footcandles higher than turn on.

XIV. Lighting Contactor. Lighting contactor shall be a UL Listed NEMA rated lighting contactor, two-pole or multipole as required, electrically held type designed to control high pressure sodium lighting loads, with silver alloy double break contacts rated of 240 volts, 480 volts or 600 volts as required. Lighting contactor shall not be the DIN rail mounted type.

XV. Power Distribution Terminal Blocks. Power distribution terminal blocks shall be rated for 600 volts and shall be used for line side connections to branch circuit breakers where more than one circuit breaker is required. Lugs on blocks shall be properly sized for conductors being used. Only one conductor shall be placed under each lug.

XVI. Neutral/Ground Bus. Neutral/ground bus shall be a factory made bus permanently bonded to the enclosure with properly sized lugs for grounding and neutral conductors.

SCHEMATIC LEGEND

1 - Safety Switch (when required)
2 - Meter (when required)
3 - Service Assembly Enclosure
4 - Main Disconnect Breaker (See Electrical Service Data)
5 - Omit
6 - Circuit Breaker, 15Amp
7 - Auxiliary Enclosure
8 - Control Station ("H-O-A" Switch)
9 - Photo Electric Control (enclosure-mounted shown)
10 - Lighting Contactor
11 - Power Distribution Terminal Blocks
12 - Neutral/Ground Bus
13 - Branch Circuit Breaker (See Electrical Service Data)
14 - Circuit Breaker Panelboard (See Electrical Service Data)
(If Type C is shown as AL or SS on descriptive code, this is the service assembly enclosure only. Panelboard enclosure is GS unless otherwise noted.
15 - Load Center

——— Power Wiring
— — — — Control Wiring
——N—— Neutral Conductor (when required) serve 120 v. loads only)
——G—— Equipment grounding conductor-always required

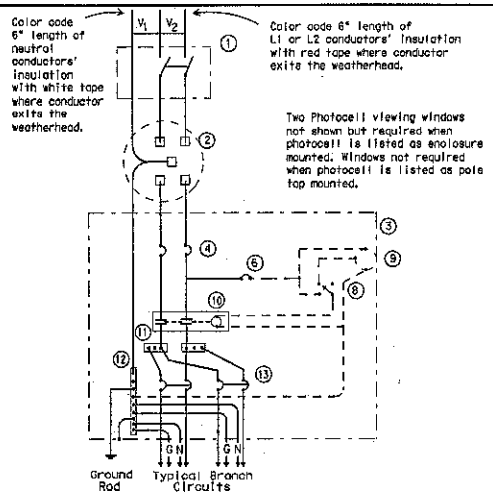

SCHEMATIC TYPE A
THREE WIRE

[Maximum feeder circuit size (High Mast Poles): 100 amps for two pole 480V, 125 amps for one or two pole 120V or 240V. Maximum branch circuit size: 50 amps.]

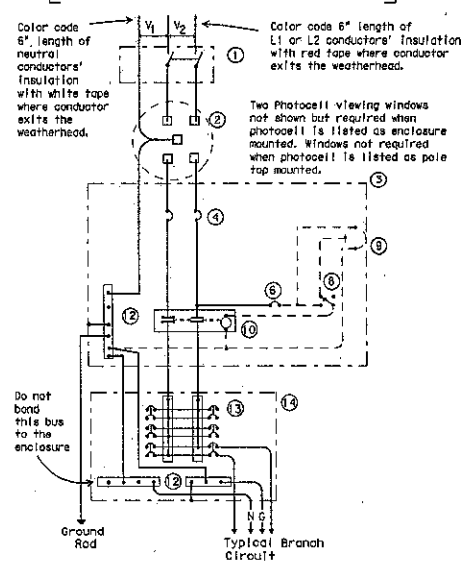

SCHEMATIC TYPE C
THREE WIRE

[Maximum feeder circuit size (High Mast Poles): 100 amps for two pole 480V, 125 amps for one or two pole 120V or 240V. Maximum branch circuit size: 50 amps.]

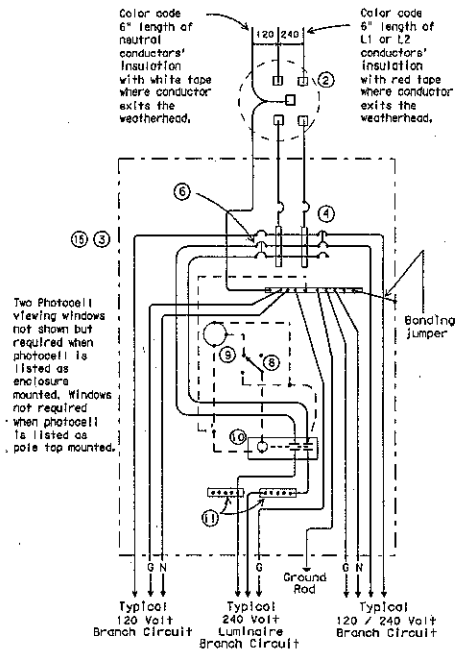

SCHEMATIC TYPE D
120/240 VOLTS - THREE WIRE

[Install photocell and lighting contactor when shown on Electrical Service Data. See Type D service notes.]

TYPE D SERVICE NOTES

Photocell and lighting contactor shall be located either in the same UL type 3R enclosure with load center or, if approved by Engineer, in separate enclosure. There shall be a window on each side of enclosure to allow operation of photocell. Both photocell contactor and breaker area shall have dead front trim. Enclosure, except for RT and PS supports, shall not exceed 36 inches in height or 16 inches in width unless approved by the Engineer. Ty D load center with lighting controls or TY D separate lighting control enclosure shall have power distribution blocks for a minimum of 4, #8 conductors per phase.

Texas Department of Transportation
Traffic Operations Division

ELECTRICAL DETAILS- SERVICE ENCLOSURE & NOTES

ED(5)-03

©TxDOT April 1998		DN TxDOT	CK TxDOT	DW TxDOT	CK TxDOT
12-00 REVISIONS 3-03		CONT	SECT	JOB	HIGHWAY
		DIST		COUNTY	SHEET NO.

71E

DISCLAIMER: The use of this standard is governed by the "Texas Engineering Practice Act". No warranty of any kind is made by TxDOT for any purpose whatsoever. TxDOT assumes no responsibility for damages resulting from its use of this standard to other formats or for incorrect results or damages resulting from its use.

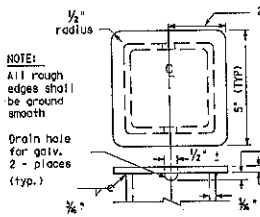

TOP OF POLE
TYPE SF & SP

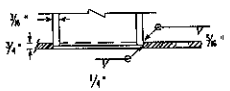

BOTTOM OF POLE
TYPE SF & SP

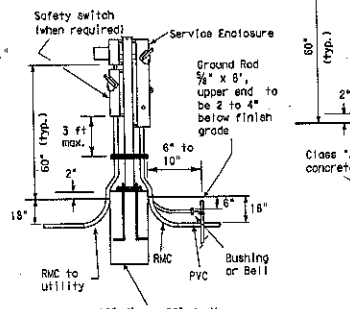

12" dia. x 36" depth foundation
4-#4 reinforcing bars and #2 spiral (typ.)

SERVICE SUPPORT
TYPE SP (U)
UNDERGROUND SERVICE
WITH SAFETY SWITCH

Color code 6" of grounded neutral conductors insulation with white tape where conductor exits the weatherhead. Color code 6" of L1 or L-2 Hot-ungrounded conductors insulation with red tape where conductor exits the weatherhead. Conductor free length, 12" min., 18" max.

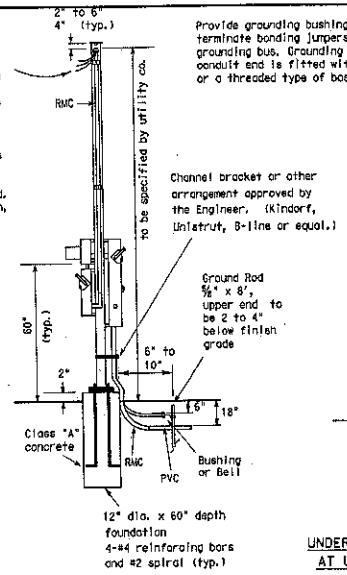

12" dia. x 60" depth foundation
4-#4 reinforcing bars and #2 spiral (typ.)

SERVICE SUPPORT
TYPE SP (O)
OVERHEAD SERVICE
WITH SAFETY SWITCH

Provide grounding bushings on all metal conduits, terminate bonding jumpers(min. #6 AWG. Copper) to grounding bus. Grounding bushing not required when conduit end is fitted with a conduit sealing hub or a threaded type of boss such as a meter hub.

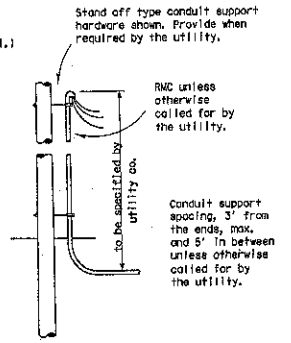

UNDERGROUND RISER
AT UTILITY POLE
(for underground service)

NOTES:

1. Support Type SP and SF: Fabricated from 4" x 4" x 3/16 " square structural tubing, ASTM A500 Grade A or B or equal. Base plate shall be 3/4 " plate, ASTM A36 or equal. All equipment and conduit shall be mounted on galvanized channel strut, 1 1/2 " x 1 5/8 " x 12 guage galvanized steel channel (Unistrut, Kindorf, B-line or equal) clamped with channel hardware, bolted or welded to vertical member as approved by the Engineer.
2. Paint field cut ends of all channels with zinc-rich paint.
3. All Steel Poles (SP and SF) shall be hot-dip galvanized after fabrication. Poles for overhead service shall be fitted with eyebolt or similar fitting, as approved by the utility company, for attachment of sevice drop to the pole.
4. All conduit and conductors attached to the electrical service and within 12 inches of the electrical service will not be paid for directly, but shall be subsidiary to the electrical service. All conduit and conductors from the utility company pole to the point 12 inches from the electrical service, including conduit and conductors required for the utility pole riser when furnished by the Contractor, will be paid for separately.
5. All mounting hardware and installation details of services shall be in accordance with utility company specifications.
6. Anchor bolts for underground service supports shall be 3/4" x 16" x 4" (dia. x length x hook length). Anchor bolts for overhead services shall be 3/4" x 56" x 4". Anchor bolts shall be provided with leveling nuts.
7. Conduit for grounding electrode conductor (ground rod wire) shall be 1/2" PVC. All other conduit on electrical services shall be rigid metal conduit. Service entrance conduit size shall be as shown elsewhere. Conduit for branch circuit entry to enclosure shall be the same size as that shown on the layout sheets for branch circuit conduit. Rigid metal conduit shall extend to the rigid metal elbow and then be coupled to the type conduit shown on the layout for that particular branch circuit. RMC shall have grounding bushings in enclosures.
8. If pole is painted, each separate painted piece shall have a bonding jumper attached to a tapped hole.
9. Sheet metal screws are not allowed for bonding. Provide 1/4-20 machine screws. Remove all non-conductive material at contact points. Terminate bonding jumper using listed device. Bonding jumper min. #6 AWG Copper. Make up all threaded bonding connections wrench tight.
10. Conduits entering enclosure from underground shall be sealed at both ends. Silicone sealant will not be allowed.
11. Ground rod clamp to be UL listed for direct burial.
12. Service entrance conductors shall exit separately bushed non-metallic openings in weatherhead.
13. Free conductor at weatherhead to be 12 in. min., 18 in. max., or as required by utility. Color code grounded-neutral conductor with white tape covering 6 in. of conductor. Color code L1 or L2 Hot un-grounded conductor with red tape covering 6 in. of conductor. Service drop and service entrance conductors must not contact metal pole in such a manner as to result in abrasion of insulated conductors.
14. Conduit support spacing to be max. 3 ft. from ends, and max. 5 ft. in between.
15. Shop drawings are not required for service support structure unless specifically stated elsewhere or as directed by the Engineer.
16. Service enclosure to be labeled as specified on ED(5) VIII C.
17. Liquidtight flexible metal conduit (LFMC) may be used between the meter and service enclosure when they are mounted 90 to 180 degrees to each other. LFMC shall be the same size as service entrance conduit. LFMC shall not exceed 3 ft. and shall be securely supported within one foot of each end. LFMC shorter then 12" need not be strapped. Each end of LFMC must have a grounding bushing or be terminated with a grounding fitting. A neutral conductor must be installed within the LFMC. Bend in LFMC shall not exceed 180 degrees.
A pull test is required on all installed conductors, at least six inches of free conductor movement shall be demonstrated to the satisfaction of the Engineer.

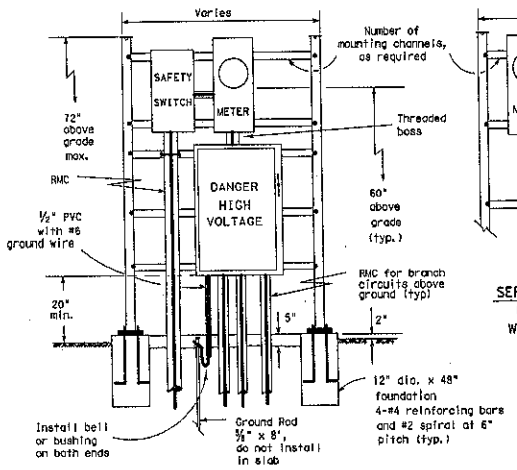

SERVICE SUPPORT TYPE SF (U)
UNDERGROUND SERVICE
WITH SAFETY SWITCH
(Typical Arrangement)

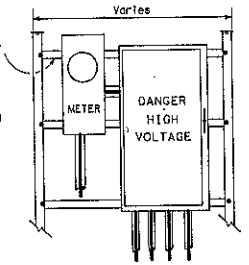

SERVICE SUPPORT TYPE SF (U)
UNDERGROUND SERVICE
WITHOUT SAFETY SWITCH

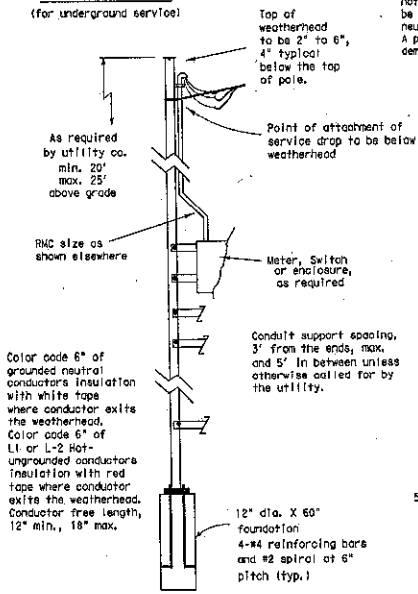

SERVICE SUPPORT TYPE SF (O)
OVERHEAD SERVICE

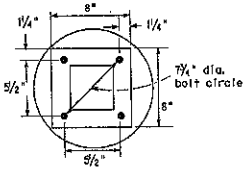

BASE PLATE DETAIL
TYPE SF & SP

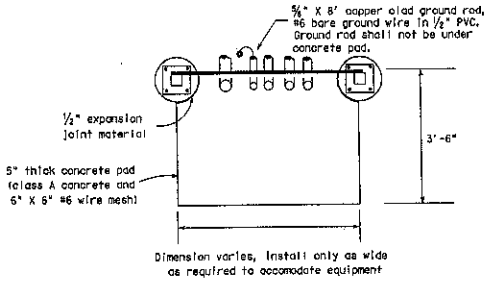

SERVICE SUPPORT TY SF (O) & SF (U)
TOP VIEW

5/03 Revision
⚠ Revised notes.

Texas Department of Transportation
Traffic Operations Division

ELECTRICAL DETAILS-
SERVICE SUPPORT
TYPES SF & SP

ED(6)-03

© TxDOT January 1992

REVISIONS	DWN TXDOT	CKD TXDOT	DWN TXDOT	CKD TXDOT
4-98	CONT	SECT	JOB	HIGHWAY
12-00				
3-03	DIST		COUNTY	SHEET NO.
5-03				

71F

DATE:
FILE:

DISCLAIMER: The use of this standard is governed by the "Texas Engineering Practice Act". No warranty of any kind is made by TxDOT for any purpose whatsoever. TxDOT assumes no responsibility for the conversion of this standard to other formats or for incorrect results or damages resulting from its use.

NOTES:

1. Luminaire conductors shall not be looped through controller cabinet.
2. Electrical system to include an equipment grounding conductor noted here as "G". All exposed metal parts are to be bonded to grounding conductor.
3. Photocell, when required, shall be mounted at top of pole or in enclosure as shown on ED(4) and ED(5) and as required by descriptive code.
4. Roadway lighting fixtures, when required, shall be in accordance with the material and construction methods of the item, "Roadway Illumination Assemblies" except for the test period for proper operation of the luminaires. Installed roadway lighting luminaires and internally lighted street name signs shall be tested for proper operation as a part of the associated traffic signal system.
5. Internally lighted street name signs (ILSN), when required, shall be in accordance with the item "Internally Lighted Street Name Signs". Because of the electrical isolation of ILSN hinges, a #12 green grounding conductor shall be run to the ILSN fixture.
6. Install ground rod at alternate location when directed by the Engineer. Maintain a minimum of 8 ft in contact with the earth.
7. Liquidtight flexible metal conduit (LFMC), may be used when meter and service enclosure are mounted 90 to 180 degrees to each other. LFMC shall be same size as service entrance conduit. LFMC shall not exceed 3 ft. and shall be securely supported within one foot of each end. No strap required for a LFMC shorter than 12". Each end of LFMC must have a grounding bushing or be terminated with a grounding fitting. A neutral conductor must be installed within the LFMC. Bend in liquidtight flexible metal conduit shall not exceed 180 degrees.
8. Minimum embedment depth as per Item 627 Treated Timber Poles.
9. Pole to be set plumb.
10. Back fill thoroughly tamped in 6 in. lifts. Place 6 inches additional backfill above grade around pole base to allow for settling, as per Item 627.
11. Excess pole length shall be trimmed from the top at a slope to aid water run off.
12. Gain pole two places for each meter, service, separate or auxiliary enclosure. See ED(4) for details.
13. All illumination and power conductors to be pull tested and megged. Do not meg traffic signal cable.
14. Enclosures are to be locked, and ground box covers are to be bolted before power is applied to the circuit.
15. Conduits entering top of enclosures to be fitted with conduit sealing hub or threaded boss, such as meter hub. Off-set nipple, when required, shall not be zinc-die-pressure cast. All metal conduits not connected to conduit sealing hub, or threaded boss must have a grounding bushing. Terminate bonding jumper to ground bus. All conduits entering enclosures shall be sealed. Silicone shall not be allowed.

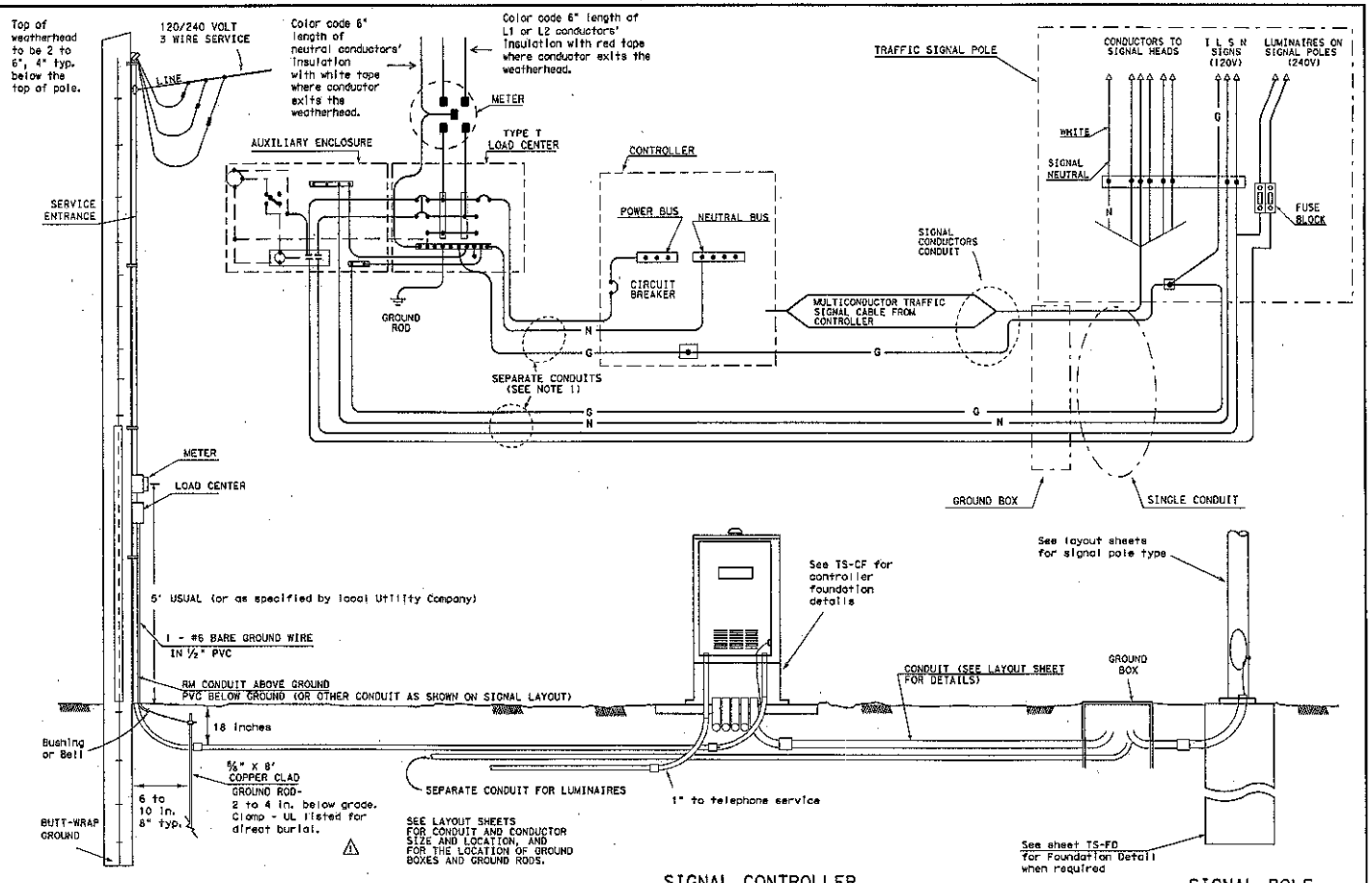

ELECTRICAL SERVICE

(TYPE T TIMBER POLE SHOWN AS EXAMPLE, SEE ELECTRICAL DETAILS, LAYOUT SHEETS, AND ELECTRICAL SERVICE DATA SHEET FOR SERVICE REQUIRED AND FOR DETAILS.)

SIGNAL CONTROLLER

SIGNAL POLE

Unless shown elsewhere in the plans, electrical service data for Types D and T shall be as follows.

ELECTRICAL SERVICE DATA

ELECTRICAL SERVICE DESCRIPTION(SEE ED(4))	SERVICE CONDUIT SIZE (RMC)	SERVICE CONDUCTORS NO./SIZE	SAFETY SWITCH AMPS	MAIN DISCONNECT CKT. BRK. POLE/AMP	TWO-POLE CONTACTOR AMPS ***	PANELBD./ LOADCENTER AMP RATING (MIN)	CIRCUIT NO.	BRANCH CKT. BRK. POLE/AMPS	KVA LOAD
TY D (120/240)070(NS)AL(E)**(*)	1¼ △1	3/#4	N/A	2P/70	30	100	T.S. Lighting	1P/50 2P/15	<7.1
TY T (120/240)000(NS)OS(E)**(*)	1¼ △1	3/#4	N/A	None	30	70	T.S. Lighting	1P/50 2P/15	<7.1

*** Eliminate photocell, contactor and separate enclosure if lighting, or internally lighted signs are not required by plans
** See descriptive code in estimate for service support type.
* See descriptive code in estimate for overhead or underground service.

5/03 Revision

△1 Revised notes.

Texas Department of Transportation
Traffic Operations Division

ELECTRICAL DETAILS- TYPICAL TRAFFIC SIGNAL SYSTEM DETAILS

ED(7)-03

© TxDOT January 1992

REVISIONS	RM TXDOT	CK: TXDOT	DN: TXDOT	CK: TXDOT
4-98	CONT	SECT	JOB	HIGHWAY
12-00				
3-03	DIST		COUNTY	SHEET NO.
5-03				

71C

DATE:
FILE:

DISCLAIMER: The use of this standard is governed by the "Texas Engineering Practice Act". No warranty of any kind is made by TxDOT for any purpose whatsoever. TxDOT assumes no responsibility for the conversion of this standard to other formats or for incorrect results or damages resulting from its use.

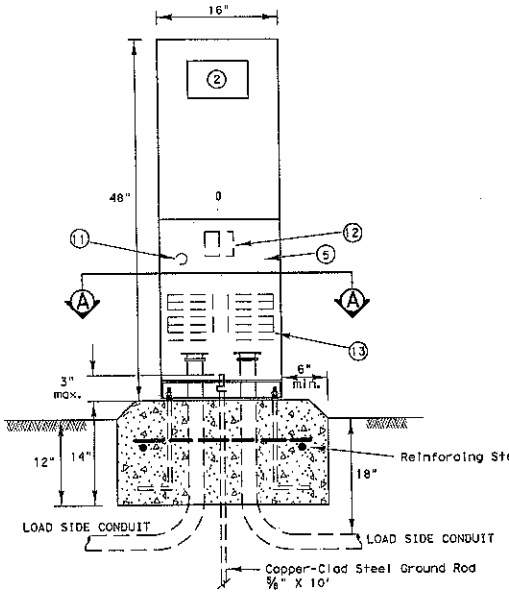

Note: Ells in foundation are rigid metal, size called for on the plans. Extension conduits from these ells may be PVC, provided ends of rigid metal conduits are more than 2 in. below top of concrete foundation. Where extension conduits are metal, grounding bushing must be installed and a bonding jumper properly terminated.

FRONT VIEW

Ty C shown, Ty A similar except that Ty A shall have individual circuit breakers mounted on a equipment mounting panel. CB Handles shall protrude through hinged deadfront trim.

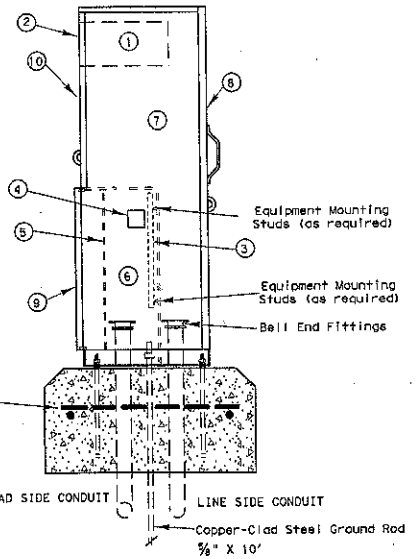

SIDE VIEW

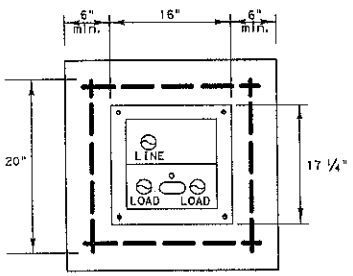

SECTION A-A

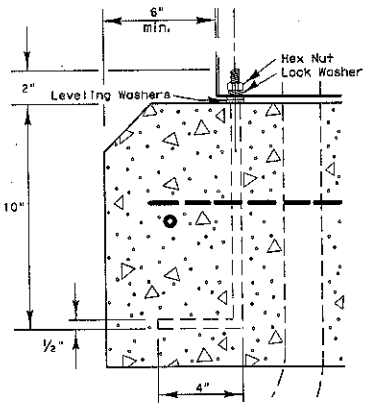

ANCHOR BOLT DETAIL

GENERAL NOTES

1. The pedestal service shall be UL type 3R, and shall be constructed of a minimum of 12 gauge stainless steel or aluminum as required by descriptive code. Stainless steel shall not be painted. For aluminum, the finish shall be an electrostatic applied polyurethane baked on powder, light green in color, or color as shown elsewhere and as approved by the Engineer. The front of the interior dead front trim shall be permanently labeled, "Danger High Voltage" with OSHA style label. The exterior of the pedestal service door shall be permanently labeled with a placard as to its use (i.e. Roadway Lighting, Traffic Signals, etc.). Placard shall be neat and professional in appearance. Lettering shall be 1" minimum height.
2. Utility access door shall have stainless steel piano hinge and provisions for padlocking.
3. Pedestal door shall have stainless steel piano hinge and stainless steel latch with provisions for padlocking.
4. Meter Access shall be hinged and capable of padlocking.
5. All mounting hardware and installation details of services shall be in accordance with utility company specifications. The Contractor is responsible for contacting the local utility company and obtaining their approval of pedestal details prior to making submittal to the Department and prior to constructing the electrical pedestal service. Any changes required by the utility company shall be noted on the submittals.
6. Meter Socket shall be a minimum of 100 amp rating and shall comply with the local utility requirements.
7. Photoelectric Control shall meet the requirements as shown on ED(5). Shield to control stray light is allowable. The Contractor shall be responsible for proper operation of the photo-electric control. The Contractor shall move and/or adjust or shield the photocell from stray or ambient nighttime light or shall make any other adjustments required for proper operation. The photocell shall face North when practicable. Unless otherwise shown on the plans, the photocell shall turn on the illumination system at 1.0 (-) 0.5 foot-candle and turn off the illumination system at two footcandles higher than turn on.
8. The Control Station (H-O-A Switch) shall be as shown on ED(5) except that H-O-A Switch operating handle shall protrude through hinged deadfront trim and NEMA 1 enclosure will not be required.
9. Concrete for pedestal service foundation shall be class A or C and shall be in accordance with Item 420, "CONCRETE STRUCTURES", except that concrete will not be paid for directly but shall be considered subsidiary to Item 628, "ELECTRICAL SERVICES".
10. Reinforcing steel shall be #4 rebar in accordance with Item 440, "REINFORCING STEEL".
11. Anchor bolts shall be A36M55 in accordance with Item 449, "ANCHOR BOLTS". Anchor bolts shall be ½ inch x 12 inches x 4 inches (dia. x length x hook length).
12. All conduit and conductors attached to the pedestal service and within 12 inches of the pedestal service will not be paid for directly, but shall be subsidiary to the pedestal service. All service conduit and conductors from the utility company transformer to a point 12 inches from the pedestal service shall be paid for separately. Service conduit shall be the size and type as shown in the Electrical Service Data.
13. Dimensions may vary to accomodate required equipment, utility company requirements, or manufacturer's standard equipment dimensions. The Contractor shall submit to the Engineer for approval, six (6) copies of brochures and/or drawings of the pedestal service to be supplied, including actual dimensions, and a paint color sample.
14. A separate enclosure as shown on ED(4) or ED(5) for photocell shall not be used for pedestal services. Photocell shall be installed as shown here.
15. The pedestal door shall have a mechanically attached data pocket on the inside. Pocket shall be either metal or thermoplastic and shall measure at least 12 inches by 12 inches. The Contractor shall prepare and submit a schematic drawing unique to an individual service. The approved drawing shall be laminated and placed in the document pocket of the service at the time of shipment to the job site. All applicable wiring diagrams and plan sheet layouts for all equipment and branch breaker circuits supplied by that service shall also be laminated and placed in the document pocket prior to shipping.
16. Ground rod clamp to be UL listed for direct burial. All non-conductive coating to be removed from ground rod at clamp location. Ground rod wire to be #8 AWG solid copper. Metal conduit ells to have grounding bushing and bonding jumpers correctly installed.
17. All conduits entering enclosures from underground must be sealed. Silicone shall not be allowed.
18. All conductors shall be megged and pull tested. Traffic signal cable not to be megged after connection, as electronics will be damaged.
19. Top of concrete foundation to be finished in a neat and workman like manner. If leveling washers are used, no more than ½ in. height shall be used at any one corner. Maximum dip or rise in foundation is not to exceed ¼ in per foot. When properly installed, top of service enclosure shall read level front to back and side to side within ¼ in. Rocking or movement of the service enclosure shall be repaired by the contractor at no cost to the state.
20. Liquidtight flexible metal conduit shall not be allowed on PS type services.

LEGEND

1. METER SOCKET, (when required)
2. METER SOCKET WINDOW, (when required)
3. EQUIPMENT MOUNTING PANEL
4. PHOTO ELECTRIC CONTROL WINDOW, (when required)
5. HINGED DEADFRONT TRIM
6. LOAD SIDE CONDUIT AREA
7. LINE SIDE CONDUIT AREA
8. UTILITY ACCESS DOOR, with handle
9. PEDESTAL DOOR
10. HINGED METER ACCESS
11. CONTROL STATION (H-O-A Switch)
12. MAIN DISCONNECT
13. BRANCH CIRCUIT BREAKERS

5/03 Revision

⚠ Revised notes.

Texas Department of Transportation
Traffic Operations Division

ELECTRICAL DETAILS ELECTRICAL SERVICE SUPPORT PEDESTAL SERVICE TYPE PS

ED(8)-03

© TxDOT April 1998

REVISIONS	DGN TXDOT	CKD TXDOT	TRG TXDOT	CRL TXDOT
12-00	DWN	CKD	JVR	HIGHWAY
3-03				
5-03	FILE	DWN-TI		SHEET NO.

71H

DATE:
FILE:

DISCLAIMER: The use of this standard is governed by the "Texas Engineering Practice Act". No warranty of any kind is made by TxDOT for any purpose whatsoever. TxDOT assumes no responsibility for the conversion of this standard to other formats or for incorrect results or damages resulting from its use.

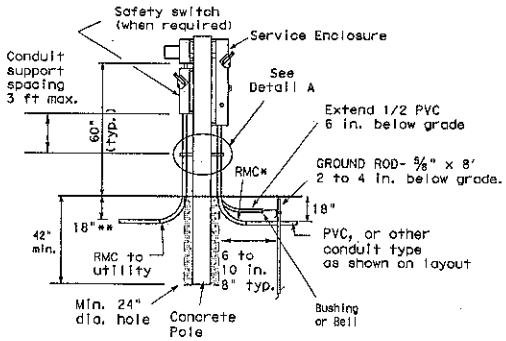

CONCRETE SERVICE SUPPORT

(Underground)

Color code grounded - neutral conductor with white tape covering 6 in. of conductor length. Color code L1 or L2 Hot conductor with red tape covering 6 in. of conductor length. Where conductors exit weatherhead, conductors free length shall be 12 in. min., 18 in. max.

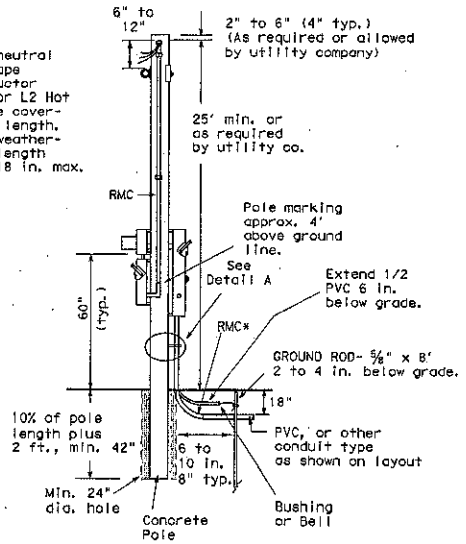

CONCRETE SERVICE SUPPORT

(Overhead)

*same size as branch circuit conduit shown on layout sheets.
** or as required by utility company.

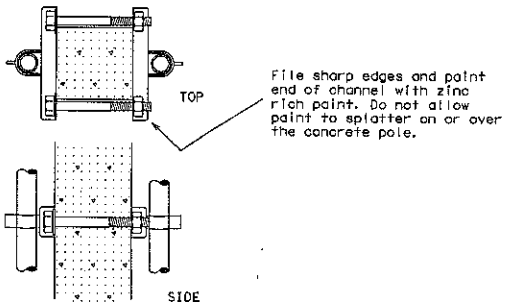

DETAIL A

Channel bracket or other arrangement approved by the Engineer. (Kindorf, Unistrut, B-line or equal)

Note: Attach channels with stainless steel concrete anchors (max. 1" depth), square U-bolts or back to back channel with long bolts, or other secure mounting as approved by the Engineer. Bolts galvanized in accordance with ASTM A153. Channel shall be galvanized.

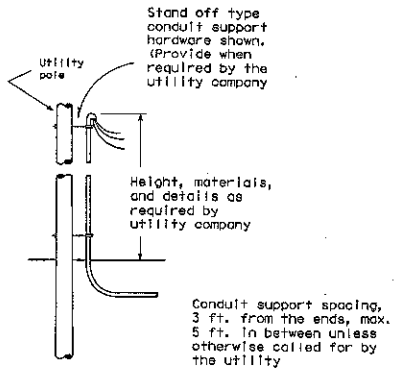

UTILITY POLE CONNECTIONS

(When underground service is required by descriptive code and utility is overhead.)

NOTES:

Electrical service support structures bid as type GC or OC shall be concrete poles and shall meet the following specifications.

1. Poles shall be prestressed concrete and suitable for direct embedment into the ground without special foundations.
2. Poles bid as type "GC" shall be a granite concrete mixture consisting of gray Portland cement with exposed pink granite aggregate. Poles bid as type "OC" shall be other concrete mixture as shown elsewhere on the plans or as directed by the Engineer.
3. Poles greater than 10 ' shall be square in cross-section, with chamfered corners, and shall have a standard taper of 0.162 inch per foot. Cross sectional dimensions shall not deviate by more than 3/8 inch. Poles 10' or less may be tapered .162"/ft or may be non-tapered. The allowable tolerance shall be plus 3 inches and -2 inches in the overall length. The width of the bottom face of the pole as it is cast may be less than the top face. All small cavities shall be cleaned, saturated with water and then filled with mortar. A small cavity is defined as one larger than 1/4 inch but smaller than 3/4 inch in diameter, and less than 3/8 inch deep. Larger non-structural cavities and spalls shall be repaired by opening side of the damaged area on a 1 to 1 slope using a mechanical grinder, cleaning thoroughly and filling with a high-strength non-shrink concrete repair material. Poles with other defects may be repaired only upon authorization of and using the method prescribed by the Engineer.
4. The end of each steel reinforcing strand in the tip and butt shall be burned back to a minimum depth of 1/2 inch. The holes left by the removal of the strand shall be thoroughly cleaned of any loose residue. The holes shall then be completely filled with non-shrink grout and smoothed evenly with tip or butt surface.
5. Prestressing strands shall have a minimum concrete cover of 1 1/4 inch.
6. A straight line joining the edge of the pole at the butt and the edge of the pole at the top shall not be distant from the surface of the pole at any point by more than 3/8 inch for each 10 feet of length.
7. The chloride content of the concrete mix, including all ingredients shall be 0.4 pounds per cubic yard, or less.
8. Concrete used in poles shall have a compressive strength at transfer of not less than 4,000 PSI, and a 28-day compressive strength of not less than 7,000 PSI.
9. Materials shall comply with the latest version of the following standards:
   a) Portland Cement - ASTM C105
   b) Admixtures - ASTM C494
   c) Aggregates - ASTM C33 or C330
   d) Reinforcing Bars - ASTM A615
   e) Cold-Drawn Spiral Wire - ASTM A82
   f) Prestressing Strand, 270K - ASTM A416
10. Poles greater than 10' shall have a 4 inch tip and 3/8 inch strands. Poles 10' or less shall have a 5 inch min. tip and 3/8 inch strands. Pole shall have a load capacity of greater than 1188 lbs. applied 2 ft. below tip.
11. Poles shall be capable of withstanding single point pick up from the horizontal position when lifting from a point 30% of the overall length down from the tip.
12. All poles shall be marked by imprinting on one face. Marking shall indicate manufacturer's name, year of manufacture, length and name or type of pole. Marking shall be located approximately 4 ft. above ground line.
13. Dunnage points, two-point pickup locations for handling pole in horizontal position, and one-point pickup locations for use in raising the pole to a vertical position and handling in setting operation shall be marked on the pole with durable ink or paint or cast into the pole. These marks shall be small but conspicuous.
14. Poles shall be embedded 42 inches or 10% of length plus 2 ft. into the ground whichever is greater.
15. When required by utility company for overhead services, poles longer than 10 feet shall have a #6 solid ground wire running the entire length exiting within 6 inches from the top and bottom of the pole. The Contractor shall connect the bottom to a butt wrap or butt plate grounding device.
16. All conduit and conductors attached to the service support and within 12 inches of the service support will not be paid for directly, but shall be subsidiary to the electrical service. All conduit and conductors from the utility company pole to a point 12 inches from the service support, including conduit and conductors required for the utility pole riser when furnished by the Contractor, will be paid for separately.
17. All mounting hardware and installation details of services shall be in accordance with utility company specifications.
18. All conduit on service supports shall be rigid metal conduit except the conduit for grounding electrode conductor (ground rod wire) shall be 1/2 inch PVC. Service entrance conduit size shall be as shown elsewhere. Conduit for branch circuit entry to enclosure shall be the same size as that shown on the layout sheets for branch circuit conduit. Rigid metal conduit shall extend a minimum of six inches underground and then coupled to the type conduit shown on the layout for that particular branch circuit. RMC shall have grounding bushings in enclosures.
19. Backfill shall be in accordance with Item 400 except for measurement and payment. Backfilling will not be paid for directly but shall be subsidiary to the various bid items.
20. Liquid tight flexible metal conduit (LFMC), may be used when meter and service enclosure are mounted 90 to 180 degrees to each other. LFMC shall not exceed 3 ft. and shall be securely supported within one ft. of each end. Each end of LFMC must have a grounding bushing or be terminated with a grounding fitting. A neutral conductor must be installed within the LFMC. Bend in LFMC shall not exceed 180 degrees. LFMC may not be installed on utility company owned poles. A pull test is required on all installed conductors, at least six inches of free conductor movement shall be demonstrated to the satisfaction of the Engineer.
21. Contractor may order concrete service support structures with 3/4" hole near top of pole for eye bolt type bracket. Eye bolt bracket may be installed as means of overhead service drop anchoring point by utility. Pole may also be center drilled in the field for installation of eye bolt bracket. When used, install bracket 6" to 12" below weatherhead.

Texas Department of Transportation
Traffic Operations Division

ELECTRICAL DETAILS- SERVICE SUPPORT TYPES GC AND OC

ED(9)-03

© TxDOT April 1998

DATE: 12-00 3-03	REVISIONS	FILE: TxDOT	CK: TxDOT	DW: TxDOT	CK: TxDOT
		CONT	SECT	JOB	HIGHWAY
		DIST		COUNTY	SHEET NO.

DATE:
FILE:

71J

I. DUCT CABLE

A. Duct cable shall be placed by the open trench method at a minimum depth of 18 inches. Bends in duct cable shall be made in the manner recommended by the manufacturer; minimum bending radius shall be 20 inches for 1 1/2 inch duct and 26 inches for 2 inch duct. Unless otherwise approved by the Engineer in writing, duct cable shall be 2 inch diameter. Handling of duct cable reels and installation of duct shall be as recommended by the manufacturer. Duct for duct cable is designed as a conduit system and shall be considered as such in NEC interpretations. Conductors shall not be spliced within a duct. Duct entering a ground box or foundation shall be coupled to a RMC elbow.

B. Duct cable shall have factory installed conductors. AWG size of electrical conductors shall be as called for in the plans or as required by the National Electrical Code. Conduit bid as High Density Polyethylene (HDPE) conduit shall meet the requirements of duct cable except that the conduit shall be supplied without factory installed conductors. HDPE conduit may be substituted for duct cable. After HDPE conduit is installed, conductors shall be installed. AWG size of electrical conductors shall be as called for in the plans.

C. Duct cable shall be extended through conduit casings in one continuous length without connection to the casing.

D. After duct cable has been installed, a pull test will be made on conductors. If conductors cannot be freely pulled, Contractor shall replace or otherwise adjust installation to free up the conductors. Duct cable ends shall be sealed with foam electrical conduit sealant or with heat-shrinking material after pull test is completed.

E. Sufficient clearance shall be left between each conduit ell so the bonding bushings may be correctly installed. Conduit cover is shown as 18 inches minimum, where run under a road, the minimum cover requirement is 24 inches.

F. All duct splices shall be by means of UL listed fittings, threaded duct with PVC threaded connector or UL listed tiewrap fitting or central Fusamatic electrically heated fusing conduit coupling installed in accordance with the manufacturer's instructions and approved by the Engineer. Glue on connectors, water pipefittings and heat shrink tubing splices will not be allowed.

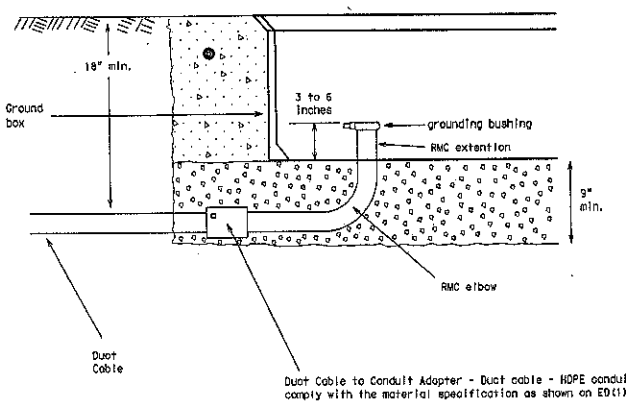

DUCT CABLE AT GROUND BOX

When the upper end of an RMC Ell does not enter the ground box, it may be extended with a Sch-40 PVC conduit nipple and bell end, provided there is 18" of cover over all parts of the elbow. If not, a rigid extension and ground bushing is required.

Gravel bed is to be a min. of 9 inches deep, placed under and not in the ground box. Gravel shall not encroach into the interior of the box.

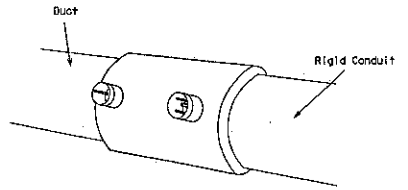

Central Fusamatic
Electrically Heated Fusing Conduit Coupling

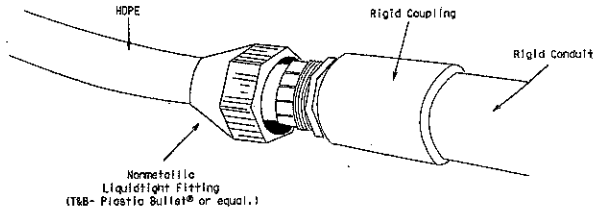

EXAMPLES OF PROPER CONNECTIONS

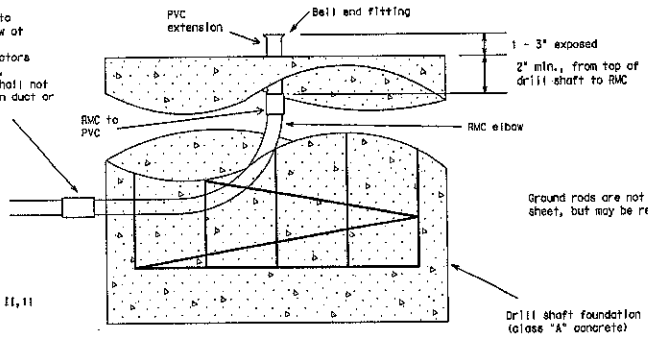

Ground rods are not shown on this standard sheet, but may be required else where in plans.

See ED(1), II,11

DUCT CABLE AT FOUNDATION

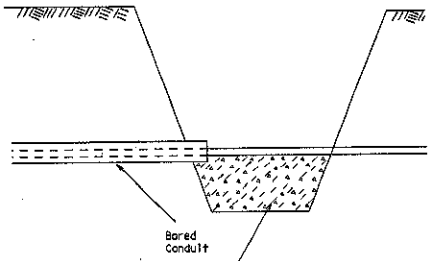

BORE PIT DETAIL

Texas Department of Transportation
Traffic Operations Division

ELECTRICAL DETAILS-
DUCT CABLE

ED(10)-03

© TxDOT April 1998

FILE: TXDOT	CK: TXDOT	DW: TXDOT	CK: TXDOT	
CONT	SECT	JOB	HIGHWAY	
DIST	COUNTY		SHEET NO.	

12-00 REVISIONS
3-03

71K

DISCLAIMER: The use of this standard is governed by the "Texas Engineering Practice Act". No warranty of any kind is made by TxDOT for any purpose whatsoever. TxDOT assumes no responsibility for the conversion of this standard to other formats or for incorrect results or damages resulting from its use.

DATE:
FILE:

DISCLAIMER: The use of this standard is governed by the "Texas Engineering Practice Act". No warranty of any kind is made by TxDOT for any purpose whatsoever. TxDOT assumes no responsibility for the conversion of this standard to other formats or for incorrect results or damages resulting from its use.

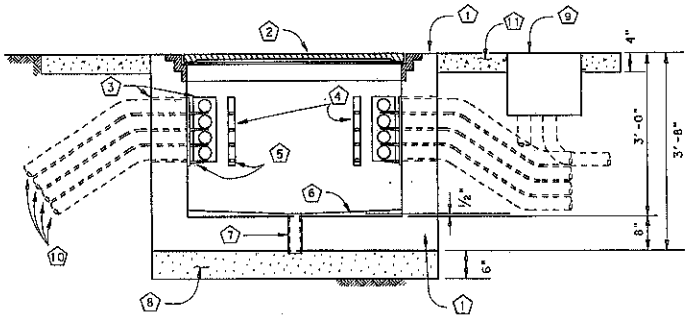

TYPICAL VERTICAL SECTION

1. Concrete ground box Type J - shall be 48" by 48" inside dimension and shall have AASHTO HS 20 wheel loading structural design. Fabricator shall submit shop drawings sealed by a Texas Licensed Structural Engineer. Shop drawings and calculations shall be for the box and lid as a unit.
2. Lid and ring shall be cast from Gray Iron in accordance with AASHTO M306, and shall be suitable for HS 20 loading or better. Proof-load testing certification in accordance with AASHTO M 306 shall be submitted. Lid shall have type T hinges and type Q handles, and shall have a safety device to prevent accidental closing once the lid has been opened. Lid shall be cast with "TxDOT COMMUNICATIONS" in one inch lettering on top. Lid and ring shall be supplied together, and shall have no sharp edges. Shop drawings shall be submitted. (Neenah Foundry R-6662-TH, or equal.)
3. 18" by 9" knockout in concrete
4. Cable rack - Joslyn J5124, Chance C203-1124 or equivalent
5. Cable rach hooks - Joslyn J5131A, Chance C203-1131 or equivalent
6. Concrete drain invert, ½" pitch from center to walls
7. 3" drain
8. Filter material - Grade 3 aggregate or finer. See ITEM 302
9. RPM ground box, as called for in layouts, for electrical power conductors and traffic signal cables. See ED(3) for ground box details
10. Conduits (See layouts for number, details, specifications, and sizes)
11. Concrete riprap apron, Bid as ITEM 432. 1 cubic yard minimum

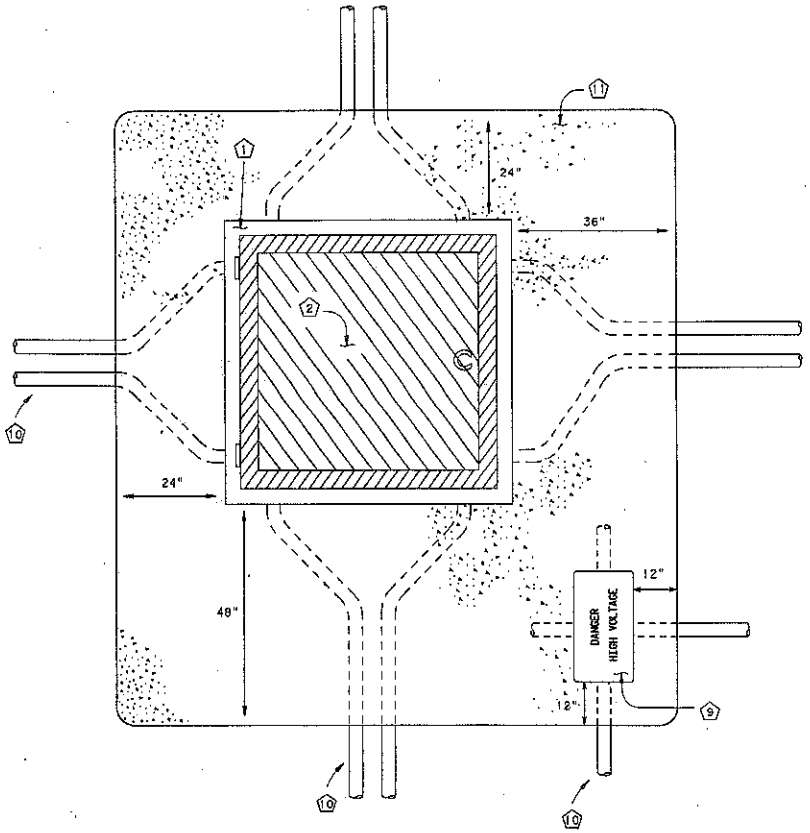

TYPICAL PLAN VIEW

GENERAL NOTES

1) Illumination, traffic signal and other conductors carrying full voltages (50 volts or greater) shall not enter the communications ground box, but shall be run into an adjacent RPM ground box, as shown in the detail.

2) Conductors in the Type J ground box shall be laid on the racks and secured in place with plastic ties. At no time shall any conductor be run through the center of the box. Contractor shall arrange conduit runs so cables shall enter and exit the box without violating the required bend radius or running throught the center of the box.

3) Riprap shown is the minimum required. Riprap shall extend to protect all conduits with less than the minimum allowed ground cover.

4) Conduits shall not extend inside the box more than 1", including the required bell end fitting or bushing. Conduits shall be securely grounted in place with Portland cement completely filling the knockout window around the conduits.

5) Rigrap and boxes shall be cast flat with a maximum slope of 0.25% (3" over 10').

6) Payment - concrete ground box Type J shall be bid as ITEM 628. RPM ground box and riprap shall be bid separately.

Texas Department of Transportation
Traffic Operations Division

CONCRETE GROUND BOX (TYPE J) FOR TRAFFIC MANAGEMENT SYSTEMS

ED(11)-03

©TxDOT July 2000

DN: TxDOT	CK: TxDOT	DW: TxDOT	CK: TxDOT		
CONT	SECT	JOB		HIGHWAY	
DIST		COUNTY			SHEET NO.

9-00
12-00
3-03
REVISIONS

DATE:
FILE:

TIL

DISCLAIMER: The use of this standard is governed by the "Texas Engineering Practice Act". No warranty of any kind is made by TxDOT for any purpose whatsoever. TxDOT assumes no responsibility for the consequences of misuse of this standard to other formats or for incorrect results or damages resulting from its use.

DATE:
FILE:

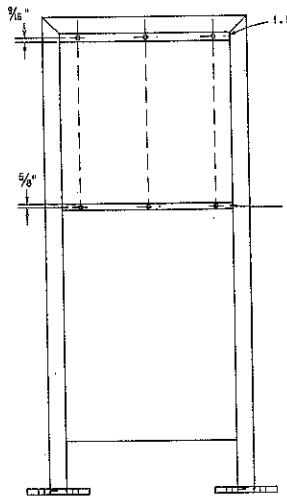

BACK ELEVATION VIEW

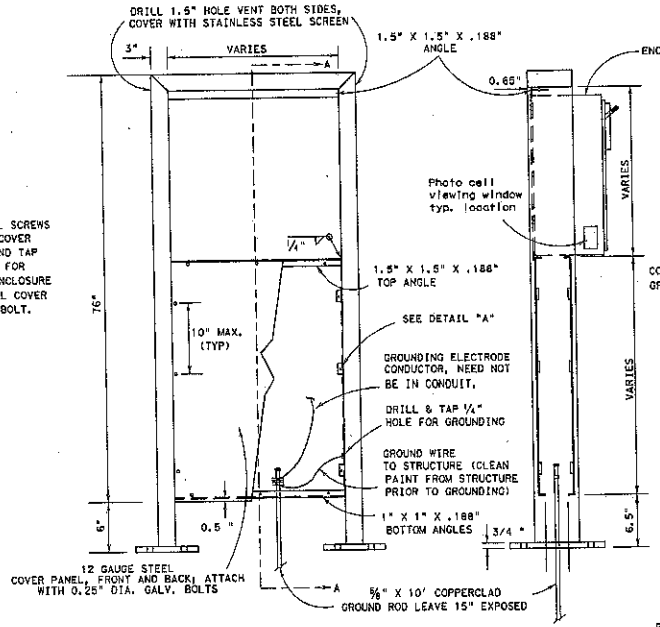

FRONT ELEVATION VIEW

SECTION A-A

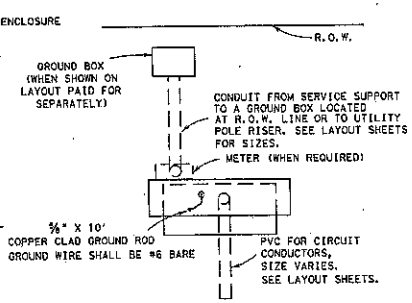

PLAN VIEW

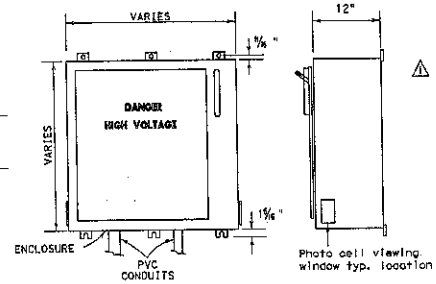

FRONT

RIGHT SIDE

ENCLOSURE

GENERAL NOTES:

1. Structure shall be designed in accordance with latest issue of AASHTO "STANDARD SPECIFICATIONS FOR STRUCTURAL SUPPORTS FOR HIGHWAY SIGNS, LUMINAIRES AND TRAFFIC SIGNALS." Structures shall be designed for 80 mph wind load with 1.3 gust factor. Shop drawings shall include ASTM material designations. Shop drawings shall be submitted for the electrical service support in accordance with Item 441, "STEEL STRUCTURES." Catalog cut sheets shall be submitted for the enclosure and equipment.
2. The structure shall be galvanized. Twelve gauge sheet covers and enclosure may be made from pre-galvanized sheeting. When shown elsewhere on the plans, structure and outside of enclosure may be painted in lieu of galvanizing.
3. Structure mounting dimensions may vary to match enclosure provided.
4. All conduit and conductors attached to the electrical service and within 12" of the electrical service will not be paid for directly, but shall be subsidiary to the electrical service. All conduit and conductors from the utility company pole to a point 12" from the electrical service, including conduit and conductors required for the utility pole riser, when furnished by the Contractor, will be paid for separately.
5. All conduits entering enclosures from underground to be sealed. Silicone will not be allowed.
6. All PVC conduits to be fitted with a bell end or bushing.
7. Support structure to be bonded to the ground rod using a #6 AWG Copper Bonding jumper to be terminated with a listed eyelet type connector connected to a 1/4-20 SS machine screw-bolt. Sheet metal screws will not be allowed for bonding. All threaded bonding connections shall be made up wrench tight. All non- conductive materials to be removed from contact surfaces.
8. Service enclosures to be labeled and stenciled see ED(5) VIII C.
9. Ground rod clamp to be UL listed for direct burial.
10. Photo cell viewing window location on each side of the service enclosure to be clear of obstructure and provide a clear line of sight view and allow for the proper light level sensing by the photo cell.
11. Liquidtight flexible metal conduit may not be used on type RT(U) service supports.

STRUCTURE DATA	
TUBULAR POLE MEMBER SIZE	ANCHOR BOLTS DIA. X LENGTH X HOOK
8" X 3" X 3/16"	5/8" X 16" X 4"

COMPONENT	ASTM
TUBING MEMBERS	A500 GRADE A
BASE PLATES	A36
ANCHOR BOLTS	A307 or A36

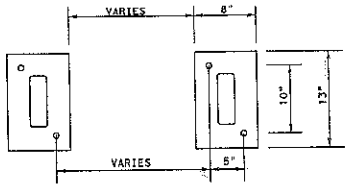

BASE PLAN VIEW

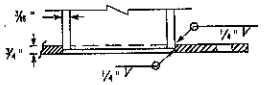

BOTTOM OF POLE

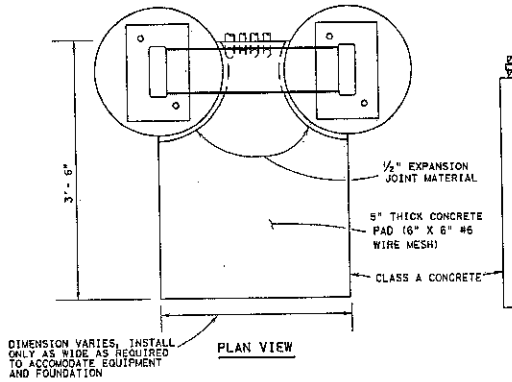

PLAN VIEW

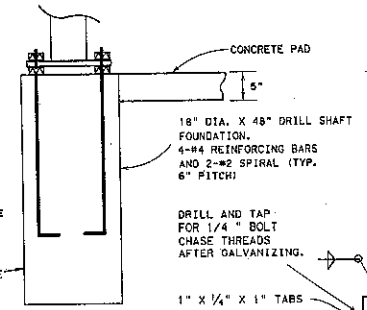

ELEVATION

FOUNDATION

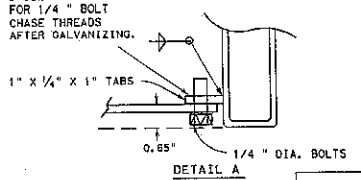

DETAIL A

5/03 Revision

⚠ Revised notes.

Texas Department of Transportation
Traffic Operations Division

ELECTRICAL DETAILS- ELECTRICAL SERVICE SUPPORT TYPE RT (U)

ED(12)-03

©TxDOT January 1992

REVISIONS		DSN TXDOT	CKD TXDOT	TRF TXDOT	CKD TXDOT
4-98		CONT	SECT	JOB	HIGHWAY
12-00					
3-03		DIST		COUNTY	SHEET NO.
5-03					

71M

DISCLAIMER: The use of this standard is governed by the "Texas Engineering Practice Act". No warranty of any kind is given or implied with this standard. It is provided on an "as is" basis without any warranty for any purpose. TxDOT assumes no responsibility for the conversion of this standard to other formats or for incorrect results or damages resulting from its use.

GROUND BOX - Type - Battery Box

A. MATERIALS

1. Battery box ground boxes shall be constructed such that it will be possible to install and accomodate up to 4 batteries measuring 8" x 13.5" x 10" (W x L x D).
2. All battery box ground boxes and covers shall be permanently marked either by impress or by permanent ink, with manufacturer's model number and manufacturer's name or logo.
3. Covers shall be bolted down, and bolt holes in the box shall be arranged to drain dirt.
4. Battery box ground boxes shall meet the following requirements:
   a. Battery box cover and cover ring will be manufactured from polymer concrete reinforced with continuous strands of woven or stitched borosilicate fiberglass cloth. The polymer concrete shall be made from catalyzed polyester resin, sand and aggregate, and shall have a minimum compressive strength of 11,000 psi. Polymer concrete containing chopped fiberglass or fiberglass reinforced plastic is not acceptable.
   b. Battery box ground box walls will be manufactured from fiberglass reinforced plastic reinforced with continuous strands of woven or stitched borosilicate fiberglass cloth. The fiberglass reinforced plastic shall be made from catalyzed polyester resin, lightweight filler and reinforced with woven roving and shall have a minimum compressive strength of 7,500 psi.
   c. Minimum inside dimensions shall be at least as follows (width x length x depth): Battery box shall be at least 15 ¼ inches x 28 ¼ inches x 14 ½ inches.
   d. Bottom edge of box or extension shall be footed with a minimum 1½ inch flange.
   e. Battery ground boxes shall withstand 600 lbs. per sq. ft. applied over the entire sidewall with less than ¼ inch deflection per foot length of box. Ground boxes and covers shall withstand a test loading of 20,000 lbs. over a 10 inch by 20 inch area centered on the cover with less than ½ inch deflection. Battery ground boxes and covers shall meet Western Underground Standards 3.6. Manufacturer shall supply certification by an independent laboratory or sealed by a Texas-Licensed Professional Engineer.
   f. Covers shall be 2 inch thick polymer concrete. All hardware shall be stainless steel. Cover shall be secured with two 1/2 inch stainless steel bolts. Bolts shall be self-retaining and shall withstand a minimum of 70 ft-lbs. torque and shall have a minimum 750 lbs. straight pull out strength. Nuts shall be floating and shall provide a minimum of 1/2 inch movement from the center of the nut. Covers shall be skid resistant, minimum 0.5 coefficient of friction. Covers shall be interchangeable between manufacturers and shall conform to the dimensions shown herein. Unless otherwise approved by the Engineer, cover shall be legibly labeled, "Traffic Signals Danger High Voltage" in minimum 1 inch letters.
   g. The battery box shall be supplied with predrilled holes to accept ⅝ inch stainless steel rods. The holes shall be installed 1 ½ inches (+/- ¼ inches) above the bottom edge of the box along the length of the box at 3 ½ inch centers beginning 4 ½ inches from the edge of the box.
   h. A minimum of seven ⅝ inch stainless steel rods threaded on both ends shall come equipped to be inserted in the predrilled holes to serve as a rack sufficient to accommodate up to four batteries. The rods shall be secured in place utilizing ⅝" stainless steel (s.s.) nuts and ⅝" X 1" s.s. flat washers.
   i. Ground boxes of the type specified above shall meet the requirements shown above. The Contractor will be permitted to furnish like materials of any manufacturer provided they are of equal quality and comply with the specifications.
   j. Two ⅜" plastic sheets measuring a nominal 6" x 24" shall be supplied which are to be placed on the secured rods upon which the batteries (supplied by others) are to be set.
   k. A minimum of four battery "bell jars" and respective tie down straps are to be supplied. These bell jars are inverted over the batteries and strapped to the batteries.

B. CONSTRUCTION METHODS

1. Battery box ground boxes shall be set on a 9 inch (minimum) bed of coarse No. 1 aggregate as defined by Item 421. Gravel shall be in place prior to setting box and conduits shall be capped. Any gravel or dirt in conduit shall be removed.
2. Construction of an apron encasing the battery box ground box including concrete and reinforcing steel is required and shall not be paid for directly but shall be subsidiary to the ground box. Reinforcing steel may be field bent. Concrete for aprons shall be considered miscellaneous concrete for testing purposes. Aprons shall be cast in place.
3. Any holes cut into the sidewall of battery box ground boxes shall be accomplished using a round hole saw or other method approved by the Engineer.

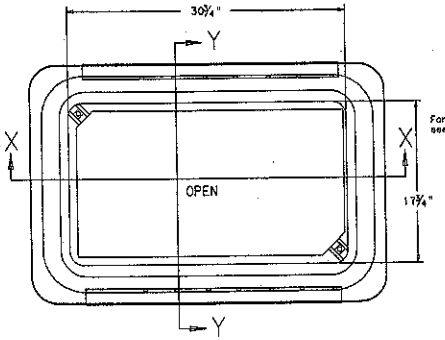

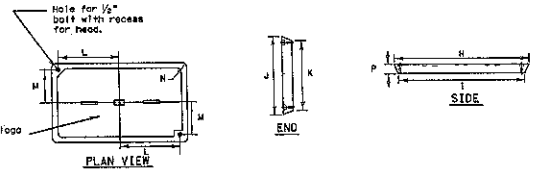

GROUND BOX COVER

GROUND BOX COVER DIMENSIONS								
BOX	DIMENSIONS (INCHES)							
SIZE	H	I	J	K	L	M	N	P
Battery box	30 ½	30 ¼	17 ½	17 ¼	13 ¼	8 ¾	1 ⅜	2

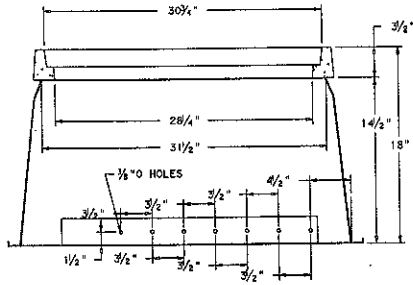

SECTION X-X

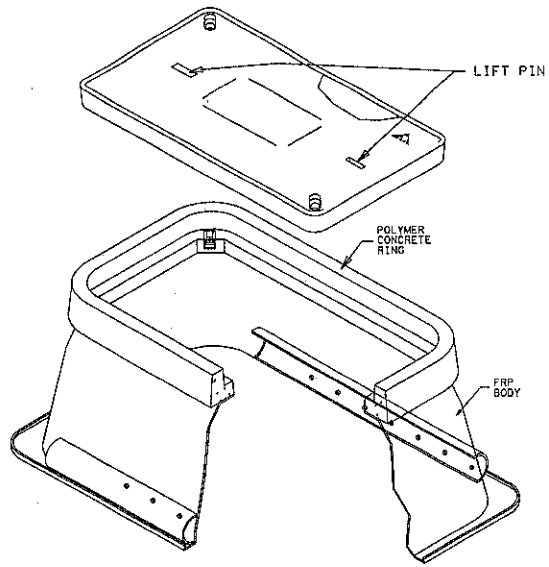

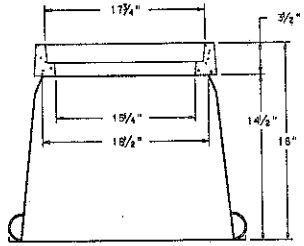

SECTION Y-Y

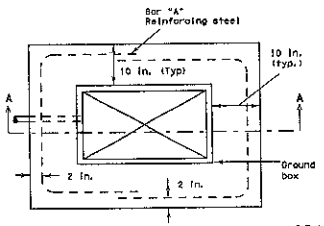

PLAN VIEW

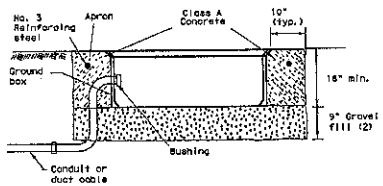

SECTION A - A

APRON FOR GROUND BOXES
(Where required)

(1) Place gravel "under" the box, not "in" the box. Gravel should not encroach on the interior volume of the box.
(2) Install bushing on the upper end of all ells.
(3) All conduits shall be installed in a neat and workmanlike manner.

Texas Department of Transportation
Traffic Operations Division

ELECTRICAL DETAILS
GROUND BOXES/
BATTERY BOX

ED(13)-03

©TxDOT May 2003	DN: TxDOT	CK: TxDOT	DW: TxDOT	CK: TxDOT
REVISIONS	CONT	SECT	JOB	HIGHWAY
	DIST	COUNTY		SHEET NO.

7 IN

DATE:
FILE: