ADDENDUM No. 1

CITY OF SAN ANTONIO
CAPITAL IMPROVEMENTS MANAGEMENT SERVICES

PROJECT NAME: **Culebra Bulky Waste Collection Center (Project No. 55-00025)**

DATE: November 8, 2013

This addendum is separated into sections for convenience; however, all contractors, subcontractors, material men, and other parties shall be responsible for reading the entire addendum. The failure to list an item or items in all affected sections of this addendum does not relieve any party affected from performing as per instructions, providing that the information is set forth one time any place in this addendum. These documents shall be attached to and become part of the Contract Documents for this project. The contractor shall be required to sign an acknowledgement of the receipt of this addendum and submit with their bid.

GENERAL

- Pre-Bid Meeting Minutes
- Questions and Answers
- Pre-Bid Meeting Notes – Addressing Scheduling Specification
- City of San Antonio Information Technology Services Department-Communication Cabling Standards Version 1.0
- SBEDA Affirmative Procurement Initiative
- Good Faith Effort Tips for SBEDA Waivers
- Receipt of Addendum No.1 Acknowledgement

PROPOSAL UPDATES

The documents listed below are to replace those previously issued:

- **Bid Opening; Tuesday December 10, 2013 at 2:00PM CST**
- Question & Answer deadline for submission; Monday December 2, 2013 by 4:00PM CST. (See Pre-Bid Meeting Minutes for submission contact information)
- Project Wage Decision; document has been updated.

PROPOSAL CONSTRUCTION DOCUMENTS AND SPECIFICATION ADDITION(S)

The documents listed below are to replace those previously issued:

- On sheet S1.01, added and revised “Special Inspection Notes”, Testing and Inspection Requirements for Site Preparation for Soil Supported Foundations” and “Testing and Inspection Requirements for Pier Foundation Construction” notes.

- On sheet S1.02, revised special inspection note “Testing and Inspection Requirements for Concrete Construction other than Structural Steel”, and “Verification and Special Inspection Tasks for Bolting Structural Steel’.
- Delete and replace all structural drawings with structural drawings attached in Addendum No. 1 to include Professional Engineer’s seal and signature dated October 23, 2013. The following drawings are listed below:

    - S1.00 – Structural Notes
    - S1.01 – Structural Notes
    - S1.02 – Special Inspections
    - S2.00 – Composite Foundation Framing Plan
    - S2.01 - Foundation Framing Plan-HHW Building
    - S2.02 – Foundation Framing Plan-Crews Quarters
    - S2.03 – Roof Framing Plan-HHW Building
    - S2.04 – Roof Framing Plan-Crews Quarters
    - S3.00 – Building Cross Sections
    - S3.01 – Building Cross Sections
    - S3.02 – Building Cross Sections
    - S3.03 – Building Cross Sections
    - S4.00 – Typical Foundation Details
    - S4.01 – Foundation Sections and Details
    - S5.00 – Roof Framing Sections and Details
    - S5.01 – Sections and Details

END OF ADDENDUM No. 1

ADDENDUM REVIEWED & APPROVED BY:

11/8/13

CIMS Project Manager **Alex D. Gamble** **Date**

NOTICE TO PLANHOLDERS:

Please insert this Addendum into your copy of the Project Construction Documents.

CITY OF SAN ANTONIO
DEPARTMENT OF CAPITAL IMPROVEMENTS MANAGEMENT SERVICES
CONTRACT SERVICES DIVISION

RECEIPT OF ADDENDUM NUMBER(S) **1** IS HEREBY ACKNOWLEDGED FOR PLANS AND SPECIFICATIONS FOR CONSTRUCTION OF: **Culebra Bulky Waste Collection Center** FOR WHICH BIDS WILL BE OPENED ON **Tuesday December 10, 2013 at 2:00 PM CST**

THIS ACKNOWLEDGEMENT MUST BE SIGNED AND RETURNED WITH THE BID PACKAGE.

Company Name: _____

Address: _____

City/State/Zip Code: _____

Date: _____

_____
Signature

_____
Print Name/Title

MEETING NOTES

City of San Antonio
Capital Improvements Management Services Department – Vertical Division
114 W. Commerce, 4th Floor
San Antonio, TX 78205

Meeting Subject: Pre-Bid Meeting Minutes
Meeting Organizer: Ronald Ramirez, Contract Officer (CIMS Contracts)
Meeting Date/Time: Tuesday, October 29, 2013 @ 2:00PM
Meeting Location: Municipal Building, Public Works 9th Floor Conference Room
Meeting Attendees: See meeting Pre-Bid Sign-In List

The following topics pertaining to the project were presented:

1. The City of San Antonio Standard Specifications for Public Works Construction and City of San Antonio Cabling Standards are incorporated into the specifications by reference. The Contractor shall retain a paper copy of these documents at the site during construction. The San Antonio Water Specifications will need to be followed for proposed water and sewer work in the Right-of-Way.
2. The Contractor will be required to obtain all necessary trade permits through the City Development Services Department and schedule necessary inspections. This includes the shade structures which will require engineered drawings and specifications be prepared for a DSD building permit.
3. The Contractor shall coordinate with all other City departments and utility companies as required to complete the project to possibly include City Public Works, City Traffic, San Antonio Water System, AT&T, Time Warner, and City Public Service.
4. The Subcontractor performing the IT and security portion of the project shall have required certifications including Panduit/RCDD and qualified to perform work on this project.
5. The Contractor shall be required to perform materials testing by a qualified third party.
6. Contractor is responsible for the security of his project site for the duration of the project.
7. Construction includes of a crew quarters building, pre-engineered steel building, pre-engineered steel canopy, shade structures, retaining walls, pavements, sidewalks, rails, irrigation, landscaping, utilities, and site work.
8. Project delivery method: Qualified Low Bid.
9. Plans and Specifications available for pick up at Debra Dockery Architects office.
10. Plans/Specifications deposit to be sent to Paul Hartnett at HES Inc.
11. Complete all required Bid forms.
12. City of San Antonio front end project specifications available on the City's website.
13. Contractor Bid Proposal; sign and acknowledged all Addendum(s) forms.
14. 180 Calendar Days for construction.
15. No direct communication with City Staff members related to project; however SBEDA may be contacted directly with questions related to SBEDA.
16. Submit project related questions in writing to City and A/E Consultant by 4:00PM CST Monday December 2, 2013. Questions to be submitted to the following by Electronic Mail:

    - Alex D. Gamble alex.gamble@sanantonio.gov
    - CC: Paul Hartnett hessolutions@msn.com

- By Mail:
  114 W. Commerce, 4th Floor
  San Antonio, Texas 78205

- By Fax:
  210-207-2197

17. The Contractor can not self-perform SBEDA requirements.
18. The Contractor to ensure Subcontractor/Supplier Utilization Plan is complete and included in Bid Proposal.
19. The Contractor to coordinate with the CIMS Project Manager and/or A/E Design Consultant on the selection of CoMET (Construction Materials Engineering Testing) services as the City will engage an additional Third-Party CoMET firm to make field inspections.
20. City of San Antonio will provide own QC (Quality Control) during the duration of construction; observations will be performed by City Inspector.
21. Prior to any construction work; Contractor to provide and submit Construction Schedule to CIMS Project Manager and A/E Design Consultant.
22. City of San Antonio to compensate Plan Review Fee at the City's own expense.
23. City of San Antonio to compensate Impact Fees at the City's own expense.

QUESTIONS AND ANSWERS

City of San Antonio
Capital Improvements Management Services Department – Vertical Division
114 W. Commerce, 4th Floor
San Antonio, TX 78205

Q&A Subject: Questions from Prospective Bidders

No questions have been submitted at this time.

Pre-Bid Meeting Notes
Addressing Scheduling Specification

- Project Schedule will be expected

- Specification calls out for specific software: Primavera Contractor 4.1 or higher or P5 or higher
    - SureTrak, P3 and MS Project schedules will not be accepted

- Special Provision for scheduling specification can be found on Departments website under Standard Specifications
    - It is the Feb.2010 Special Provision

- Biggest difference from former scheduling specification is the removal of the cost loading requirement

- The Project Schedule will not be measured or paid for directly

- Primavera Contractor is least expensive
    - Contractor currently cost approx. $1600 (this includes one year of support)

- P6 requires you to buy 10 licenses at a cost of $2600 per license and a one year support fee of $500+, totaling approx $31,000

- Schedule template will be provided that will include project calendars and a Work Breakdown Structure

- Project baseline will have to be approved before the NTP is given for construction

- Monthly updates will be required and pay applications can be withheld until an acceptable update is submitted

- Narrative form will be required to be completed with each update

City Of San Antonio

Information Technology Services Department

Communication Cabling Standards

Version 1.0

Point of Contact:
Mike Mitchell
515 S Frio
San Antonio, TX 78207
(210) 207-8301

1. Scope 8
1.1 Products and Applications Included 8
1.2 Responsibility 8
1.3 Purpose 8

2. How to use this document 9
2.1 Qualifications, Procedures, And Products 9
2.2 Standards 9
2.3 Changes 9
2.4 Regulatory and Other Requirements 9

3. Qualifications 11
3.1 Contractor 11
3.2 Technicians 11
3.3 Test Equipment 12
3.4 Tools 12
3.5 Mandatory Tools For Cable Technician 12
3.6 Installation Team & Special Tools (on van or truck) 13

4. Acceptable Products 14
4.1 the City Standards 14

5. Network Installation Summary 15
5.1 Building Connectivity 15
5.2 MDF/IDF Room Architecture 15
5.2.1 Plywood Backboard 15
5.2.2 Cable Entry 16
5.2.3 Fire Stopping 16
5.2.4 Grounding 16
5.2.5 Bonding 16
5.2.6 Arranging Equipment Cabinets Within the MDF/IDF Room for 80+ Personnel 17
5.2.7 Equipment Cabinets 17
5.2.8 Cabinet Labeling 17
5.2.9 Arranging Equipment Within the Data Cabinet 17
5.3 MDF/IDF Room Cable Tray Systems 18
5.4 Cable Management 18
5.5 MDF/IDF Room Environment 18
5.5.1 Temperature and Humidity Standards 18
5.5.2 Lighting Standards 19
5.5.3 Interior Finishes 19
5.5.4 Electrical Power Standards 19
5.5.5 Telephone ..... Error! Bookmark not defined.
5.5.6 Housekeeping 20
5.5.7 Security 20
5.6 Quality Assurance 21
5.6.1 Acceptance Procedure 21
5.7 Wiring Specifications 21
5.8 Floor Outlets 22

5.9 Buried Conduit 22
5.10 Aerial Cable 22

6. Horizontal Cabling Standard 23
6.1 General 23
6.2 Products 23
6.2.1 100 Ohm Unshielded Twisted Pair Cable (UTP) 23
6.2.2 Category 5e, Eight-Position Modular Jacks (RJ-45) 26
6.2.3 Category 5e Modular Patch Panels 26
6.2.4 Category 5e IDC Wall-Mounted Termination Blocks 26
6.2.5 Modular Face Plates 27
6.2.6 Surface Mount Boxes 27
6.2.7 Multi-User Telecommunications Outlet Assembly (MuTOA) 28
6.2.8 Wall-Phone Jack Assembly 28
6.3 Execution 28
6.3.1 Installation 28

7. Backbone Cabling Standard 30
7.1 General 30
7.1.1 Summary 30
7.2 Products 30
7.2.1 Fiber Optic Cable – General 30
7.2.2 Fiber Optic Riser Cable – Single-Mode 30
7.2.3 Fiber Optic Cable – Multimode 31
7.2.4 Fiber Optic Connectors – Single-Mode 31
7.2.5 Fiber Optic Connectors – Multimode 32
7.2.6 Fiber Optic Termination Panels 32
7.2.7 Multi-Pair Copper Riser Cable 32
7.2.8 Copper Riser Termination Hardware 33
7.3 Execution 33
7.3.1 Installation 33

8. Support Structures 34
8.1 General 34
8.2 Pathways 34
8.2.1 General 34
8.2.2 Cable Trays 34
8.2.3 Distribution Rings and Spools (mushrooms) 35
8.2.4 Conduits 35
8.2.5 Supports 38
8.2.6 Surface Raceway 39
8.3 Spaces 39
8.3.1 Plywood 39
8.3.2 Equipment Racks 39
8.3.3 Floor Mounted Cabinets 40
8.3.4 Wall-mounted Equipment Racks and Cabinets 40
8.4 Bonding Infrastructure 40
8.4.1 General 40
8.4.2 Bonding Conductor 40

8.4.3 Summary 41
8.4.4 Design Requirements 41
8.4.5 Products 41
8.4.6 System Requirements 43
8.4.7 Execution 44
8.4.8 Installation 45
8.5 Installing Cable Support Systems 48
8.5.1 General 48

9. Pulling Cable 52
9.1 General 52
9.2 Cable Pulling Setup 52
9.2.2 Pulling Horizontal Cable in Conduit 53
9.2.3 Pulling Horizontal Cable in Open Ceiling 53
9.2.4 Pulling Backbone in Vertical Pathway—From Top Down 53
9.2.5 Pulling Backbone in Vertical Pathway—From Bottom Up 53
9.2.6 Pulling Backbone—Horizontal 54
9.2.7 Cable Pulling Precautions 54

10. Firestopping 55
10.1 General 55
10.2 Typical Installations 56
10.2.1 Sealing a Floor Penetration With Putty 56
10.2.2 Sealing an Outlet Box With Putty 56
10.2.3 Steps—Restore Penetrations (general) 57

11. Cable Terminations 58
11.1 General 58
11.2 Pre-Termination Functions 58
11.3 Copper IDC Termination 58
11.3.1 General 58
11.3.2 Steps—IDC Termination 59
11.4 Fiber Termination 60
11.5 Copper Cable Splicing 61
11.6 Optical Fiber Cable Splicing 61

12. Installation Verification 62

13. Safety And Cautions For Fiber 63
13.1 Fiber Optic Installation Safety 63
13.1.1 General 63
13.1.2 Eye Protection 63
13.1.3 Protection From Fiber Scraps 63
13.1.4 Other Safety Issues 64
13.2 Cleanliness 64
13.2.1 Guidelines For Cleanliness 64

14. Fiber Optic Installation Requirements 65
14.1 General Guidelines 65

14.1.1 Receiving Fiber Optic Cabling and Equipment on Site 65
14.1.2 Handling Fiber Optic Cables 65
14.2 Support Structures 65
14.3 Removal of Abandoned Cables 66
14.4 Fire Stopping 66
14.5 Grounding and Bonding 66

15. Fiber Optic Cables 67
15.1 Cable Types 67
15.1.1 Cables by Fiber Types 67
15.1.2 Fiber Optic Cables by Construction Type 67
15.2 Flammability - Cable Ratings and Markings 68
15.3 Fiber Optic Cable Color Codes 68
15.3.1 Cable Jackets 68
15.3.2 Fiber Color Codes 69
15.4 Installing Fiber Optic Cable 69
15.4.1 General 69
15.4.2 Installation Guidelines 69
15.5 Cable Plant Hardware 71
15.5.1 Cable Racks, Trays, Conduit and Innerduct 71
15.5.2 Fiber Optic Splicing and Termination Hardware 71
15.6 Use Of Cable Ties 72

16. Fiber Optic Termination 73
16.1 General 73
16.2 Fiber Optic Connectors 73
16.2.1 Choice of Connector 73
16.2.2 Termination Types 74
16.2.3 Termination Process 74
16.2.4 Connector Performance 75
16.2.5 Performance Verification 75
16.2.6 Fiber Polarization 75
16.3 Fiber Optic Splices 75
16.3.1 Types of Splices 75
16.3.2 Splice Performance 76
16.3.3 Splice Performance Verification 76

17. Testing The Installed Fiber Optic Cable Plant 77
17.1 General 77
17.2 Continuity Testing 77
17.3 Insertion Loss 77
17.4 OTDR Testing 78

18. Administration, Management, And Documentation For Fiber Optics 79
18.1 Guidelines 79

19. Labels And Labeling 80
19.1 Visibility and Durability 80
19.2 Specifications 80

19.3 Mechanical Generation **80**
19.4 Approved Manufacturer's **80**
19.5 Label scheme **80**
19.5.1 Legacy scheme **81**
19.5.2 Hierarchical scheme **81**

Appendix A: Field Test Requirements **82**
A.1 General **82**
A.2 100 Ohm Balanced UTP and ScTP Cabling **82**
A.2.1 Test instruments **82**
A.2.2 Performance parameters **82**
A.2.3 Permanent link test configuration **82**
A.2.4 Channel test configuration **82**
A.2.5 Backbone and other cabling test configuration **82**
A.3 Optical Fiber Cabling **83**
A.3.1 Test instruments **83**
A.3.2 Performance parameters **84**
A.3.3 Cabling test configuration **84**

Appendix B: Calculating The Loss Budget For A Fiber Optic Cable Plant **86**
B.1 Information Necessary: **86**
B.2 Process: **86**
B.3 To calculate the fiber loss: **86**
B.4 To calculate the connector loss: **86**
B.5 To calculate the splice loss: **86**
B.6 To calculate the total cable loss, add the losses calculated above: **86**
B.7 Interpreting the result: **87**

Appendix C: Definitions, Acronyms, Abbreviations, And Units Of Measure **88**
C.1 Definitions **88**
C.2 Fiber Optic Definitions **99**
C.3 Acronyms, abbreviations and units of measure **104**

Appendix D: Bibliography And References **106**

1. Scope

1.1 Products and Applications Included

A structured cabling system is a complete collective configuration of cabling and associated hardware on a premises which, when installed properly, provides a comprehensive telecommunications infrastructure. This infrastructure is intended to support a wide range of telecommunications services in a converged environment such as voice, video and data networks.

1.2 Responsibility

The City of San Antonio (herein referred to as the City), Information Technology Services Department (ITSD) is responsible for the standards and management of the installation and maintenance of structured cable systems for data and voice systems, also commonly referred to as low voltage cabling.

1.3 Purpose

The purpose of this document is to provide guidelines for all aspects of the installation and maintenance of these cable systems in the various facilities owned and leased by the City of San Antonio.

Adherence to the standards described in this document is vital to providing services to the various city departments and citizens serviced by City communication networks.

2. How to use this document

2.1 Qualifications, Procedures, And Products

The City Information Technology Service Department's cable standards document is divided into the following major sections with subsections providing detail.

Contractor Qualifications
Installation Procedures
Acceptable Products

2.2 Standards

Where this document conflicts with published standards, BICSI manuals, or industry best practices, this document will prevail.

Deviations from the standards described in this document must be approved by the ITSD Communications Manager or designated point of contact prior to installation.

A request for deviation must be submitted in writing and include drawings, part numbers, cut sheets, and a valid reason for deviating from the standard.

2.3 Changes

Recommendations or suggestions for changes are invited and must be submitted as a request for deviation.

2.4 Regulatory and Other Requirements

a) All information in this document is intended to conform to the National Electrical Safety Code (ANSI/IEEE C2) and National Electrical Code (ANSI/NFPA 70). Installers should always follow the NESC, NEC, applicable state and local codes, manufacturer's instructions, and contract documents when installing telecommunications cabling.

b) Only qualified persons familiar with telecommunications cabling should perform the work described in this document. It is recommended that all work be performed in accordance with NFPA 70E, *Standard for the Electrical Safety in the Workplace.*

c) General requirements for installing electrical products and systems are described in the latest version of NECA 1, *Standard Practices for Good Workmanship in Electrical Contracting* (ANSI). Other *NEIS* provide additional guidance for installing particular types of electrical products and systems. A complete list of *NEIS* is provided in Appendix D. The installation should follow the NEC, applicable state and local codes, and manufacturers' instructions for the installation of electrical and telecommunications products and systems.

d) Information within this document is intended to comply with the following standards.

- ANSI/NFPA 70-2005; *National Electrical Code*

- ANSI/TIA 455-78-B-2002; *Optical Fibres – Part 1-40: Measurement Methods and Test Procedures – Attenuation*

- ANSI/TIA 598-C-2005; *Optical Fiber Cable Color Coding*

- ANSI/TIA 526-7-1998; *Optical Power Loss Measurements Of Installed Single-mode Fiber Cable Plant*

- ANSI/TIA 526-14-A-1998; *Optical Power Loss Measurements Of Installed Multimode Fiber Cable Plant*

- ANSI/TIA 568-B Series-2001; *Commercial Building Telecommunications Cabling Standard*

- ANSI/TIA 606-A-2002; *Administration Standard for the Telecommunications Infrastructure of Commercial Buildings*

- ANSI/J-STD 607-A-2002; *Commercial Building Grounding (Earthing) and Bonding Requirements for Telecommunications*

- ANSI/TIA 569-B-2004; *Commercial Building Standard for Telecommunications Pathways and Spaces*

- TIA/TSB 140-2004; *Additional Guidelines for Field-Testing Length, Loss and Polarity of Optical Fiber Cabling Systems*

3. Qualifications

3.1 Contractor

Qualified cabling contractors must be a PCI, Panduit Certified Installation company and have a BICSI Registered Communications Distribution Designer (RCDD) on staff. BICSI Certified Technicians are preferred, but not mandatory.

3.2 Technicians

Cable technicians must be capable of working independently and serving as a "lead tech" with the following current certifications. Refer to the list of qualifications.

Panduit Copper certification.
Panduit Fiber certification.

The duties and responsibilities of a cable technician include basic skills for the Information Transport Systems (a.k.a., telecom, voice & data, or structured cable) industry. Basic skills such as the ability to install and terminate copper and fiber optic cable; build out equipment rooms, closets and racks; setup configure and use copper and fiber optic test equipment; read and understand blue prints and related technical documentation; and perform overall installations according to industry standards, best practices, and manufacturer specifications.

The cable technician must be able to demonstrate and perform the following:

- Perform Site Surveys
  - Use Construction Plans and specifications
  - Conduct visual site survey and inspections
  - Pull horizontal cable
    - In conduit
    - In open ceiling
  - Pull optical fiber optic cable
    - In innerduct
- Build-out Equipment Rooms (Closets)
  - Determine equipment layouts
  - Mount/install backboards
  - Mount/install cross terminals
  - Mount/install racks & patch panels
  - Install optic fiber panels & hardware
- Install Grounding Infrastructure
  - Know electrical codes
  - Know *National Electric Code®*
- Termination
  - Complete IDC terminations (i.e., 66, 110)
    - Terminal blocks
    - Patch panels
    - RJ-45 connector
- Connectors
  - Assemble and install
    - modular plugs (RJ-45)
    - Coaxial connectors
    - Crimp connectors
    - Optical fiber connectors
      ST, SC & LC
  - Demonstrate color codes (T-568A/B)
- Testing
  - Copper Category 5e/6 certification using hand held test equipment (Fluke,

- Install grounding backbones & busbars

- Installation of Work Area Outlets
  - Wall
  - Floor
  - Power pole & modular furniture
  - RJ-45 connector
  - Modular jacks
- Pulling Backbone Cable
  - Pull backbone cable
    - Bottom up or top down
    - Horizontal to floor and ceiling
- Firestopping
  - Core firewall
  - Install sleeves
  - Pull cable
  - Install intumescent materials and backing
- Pre-termination
  - Organize, form, dress cable
  - Determine length & slack required
  - Label cables

WireScope)
- Optical fiber; Single & Multimode using a light source and power meter

- Troubleshooting
  - Diagnose, identify, and correct
    - Copper cable problems
    - Optical fiber cable problems

- Retrofits
  - Identify active circuits
  - Implement cutover

- Administrative Tasks
  - Document test results
  - Document as-built drawings (red lines)
  - Complete daily reports
  - Order/inventory materials
- Remain current on industry best practices and manufacturer requirements

- Keep up with standards and codes

3.3 Test Equipment

The contractor must have cable certification test equipment capable of certifying Category 5e, Category 6, and multi mode and single mode fiber optic cable installations, such as the following. Technicians must be proficient with the test equipment being provided by the contractor.

Agilent, WireScope Pro or most current
Fluke, DTX-1800 or most current
Ideal, LanTek6 or most current

3.4 Tools

The contractor is responsible to insure that each technician has and maintains the tools and other equipment necessary to perform the specific tasks assigned.

Personal hand tools, refer to the attached list.
Ladders, refer to the attached list.
Cable test and certification equipment

3.5 Mandatory Tools for Cable Technicians

D814 Punch Tool with 66 Blade
D814-88 Punch Blade

4” Straight Screwdriver
6” Straight Screwdriver
4” Phillips Screwdriver
6” Phillips Screwdriver
Snips
Side Cutter
Wire Strippers
Flashlight, 2-AA batteries
Small Tool Bag or Tool Box
Pliers
Needle Nose Pliers
Channel Lock Pliers
Utility Knife
Adjustable “Crescent” Wrench
3/8” Drive Ratchet and Socket Set
12” Hack Saw
10” Sheetrock Saw
Tape Measure
16-oz. Hammer
Punch or Scratch All
Torpedo Level
Toner and Tracer
25-ft.Fish Tape
Cordless Drill
Large Tool Bag or Tool Box
Digital Multimeter (volt-ohm meter)
Mod Tap SLT3
Buttset
Soft Side Technician Bag
RJ-Crimp Kit (RJ-45/11)
RG58, RG59, and RG11 Crimper
Pin Crimper
Coax Stripper
Soldering Iron

3.6 Installation Team & Special Tools (on van or truck)

6-ft., Fiberglass, Type I, 350 Lb., Step Ladder (2)
8-ft., Fiberglass, Type I, 350 Lb., Step Ladder (2)
Corded Heavy-Duty Hammer Drill
Cable Spool/Reel Jacks
Manufacturer Specific Crimp/Termination Tools
Cable Test/Certification Equipment
WireScope Pro or 350; Fluke DSP-4000 or DTX; LanTek 6 or 7
2-Wheel Hand Truck (dolly)

4. Acceptable Products

4.1 City Inside Plant Standards

The City has standardized on the following products for copper and optical fiber installations.

Copper connectivity products – Panduit
Copper cable – General or Panduit Cable Manchester
Optical fiber connectivity – Corning or Panduit
Optical fiber cable – Corning
Equipment cabinets or racks – Chatsworth
Grounding and bonding – Chatsworth or Panduit
Cable support – Erico/Caddy or Panduit

The City may substitute other manufacturers as needs arise.

Deviations must be requested as described in the How to Use This Document section.

5. Network Installation Summary

The following section is a summary of installation requirements. These items are discussed in more detail throughout this document.

5.1 Building Connectivity

The City employs various communication services for building connectivity. The following communications services are commonly used:

Carrier-based (Telco) Point to Point T-1
Carrier-based cable modem service
Carrier-based Ethernet with a copper 8PC handoff
Carrier-based Ethernet with a multi-mode (LC) handoff
Private Ethernet with a copper 8PC handoff
Private Ethernet with a multi-mode fiber (LC, SC, and ST) handoff
Private Ethernet with a single-mode fiber (LC, SC, and ST) handoff
Private Optical (OC-48, OC-192) fiber with single mode fiber (LC, SC) handoff

5.2 MDF/IDF Room Architecture

A MDF/IDF Room provides a controlled environment to house telecommunications equipment and connecting hardware. It is also the demarcation point for all Facility, Backbone, Riser and horizontal cabling. This room is not to be shared with Electrical service, Security, Paging, Video Surveillance or alarm systems. This room should be located as close to the center of the building as possible.

The minimum dimensions for the MDF/IDF is 6’ x 8’ with a 9’ ceiling and a 36” door opening outward. This room will support up to 80 City Personnel.

For buildings that house more than 80 people the minimum MDF/IDF size shall increase to 10’ x 10’with a 9’ ceiling and an outward swing 36” door. ITSD should be contacted during the design phase to determine final room layout.

On buildings requiring a MDF and one or more IDF’S the distance between rooms should be limited to 180 meters.

Within this document there are “rules” and “guidelines”. The rules shall be followed precisely, while the guidelines should be applied using common sense and improvising where necessary.

5.2.1 Plywood Backboard

One wall in any MDF/IDF will be completely covered with ¾” fire rated plywood with stamps visible for inspection and if possible placed on a permanent wall and no more than 12” above

finished floor level. Fire rated Plywood backboard should never be painted and the fire rated stamps shall be visible after installation. In the event that non fire-rated backboard is used, two coats of flame-retardant paint shall be used to paint the plywood.

Plywood backboards shall be used for installing AT&T, Time Warner, Grande and other service providers and other equipment requiring wall mounting. Any riser/backbone cable that may require lightning protection/bonding and should also be mounted on the wall

5.2.2 Cable Entry

Backbone and Riser Cable entry – floor/ceiling – should be located on the plywood covered wall starting on the left side of the wall. Protectors shall be terminated on this wall converting from underground cable to inside cable and extended into the data cabinet. This installation is pre-engineered and the work done by contractors.

Conduit or sleeve should penetrate the walls 6”, with ends protected by plastic, or other appropriate bushings, to prevent cable abrasion during installation.

5.2.3 Fire Stopping

Fire stopping material shall be in place after all cable and wire construction involving penetration through fire barriers.

5.2.4 Grounding

Grounding is the electrical connection to earth, normally through the earth electrode system and must comply with local fire code.

Aluminum cable sheath as well as protectors shall be grounded using #6 copper running to the building ground (Electrical ground, or a ground rod, specified on the original engineering drawings).

Additionally, all racks, cable trays, and shelving shall be grounded using #6 copper running to building ground when compatible with required electrical codes, the grounding instructions and requirements of the equipment manufacturer should also be followed. Cable tray that is bolted together (metal-to-metal connection) needs to be grounded with grounds straps after bonding has occurred.

5.2.5 Bonding

Bonding is the electrical connection between two metallic surfaces to provide a low resistance path between them.

Bonding shall be by #6 copper, cabinet to cabinet or cable tray to cable tray. Paint will have to be removed on painted surfaces to ensure a good connection.

5.2.6 Arranging Equipment Cabinets within the MDF/IDF Room for 80+ Personnel

The following guidelines shall be observed concerning the arrangement of equipment cabinets within the MDF/IDF rooms: See Figures 1-1, 1-2, and 1-3.

Note: Paragraphs A and B refer to the distance between the equipment cabinets and the reference wall. Designers should take into consideration the equipment to be placed in a rack when laying out rack placement within a room.

A. There shall be no less than 48" clearance between the front, rear, or side of an equipped rack and a wall with a communications components on it.

B. There shall be no less than 36" clearance between the front, rear, or side of an equipped rack and a blank wall (communications facilities).

Exception: The side of a cabinet, or row of cabinets, may be placed closer than 36" to the wall provided that easy access to both the front and rear of the rack is not compromised.

5.2.7 Equipment Cabinets

Equipment cabinets shall be used in all MDF\IDFs. Chatsworth 42U TerraFrame cabinets should be used for all new installations or in existing installations where there is adequate room. The top of all wall mounted cabinets are to be 72" above the floor. These cabinets shall be lined on both sides of the mounting rails with Panduit wire managers with fingers of 3.3". In the event that a Terraframe cabinet will not fit, a Chatsworth CUBE-IT, or equivalent may be used, and shall be 24", 36" and 48" wall mounted or 60"/72" wall mounted floor supported depending building requirements. All cabinets are 30" deep and for installations of 80 personnel or less. In the event that a Chatsworth CUBE-IT will not fit and the communications facilities are in an enclosed room, a Chatsworth floor mounted two-post cabinet will be used. In the event that a ChatsWorth floor-mounted cabinet will not fit or the communications facilities are not in an enclosed room, a Chatsworth wall-mounted cabinet will be used.

5.2.8 Cabinet Labeling

Each rack shall be labeled on the front center at the top and bottom of the rack with one-inch high numerals. Use a self adhesive type label maker. The first rack in a row or lineup served by a cable tray shall be labeled rack #101. The second rack in that lineup shall be labeled #102, etc.

5.2.9 Arranging Equipment Within the Data Cabinet

Placement of equipment in each rack shall be specified by EIA mounting space position. One EIA mounting space equals 1.75 inches. Mounting spaces count from bottom of the rack.

Rack load shall not exceed manufacturers recommended limit.

A minimum of four mounting spaces should be left at the top of the cabinet for a fiber LIU. This should be followed by a one U wire manager and then the required number of 48 port

patch panel for Cat 5e/6 cables with a one U wire manager between each. There should be space left on the patch panel allowing for a 20% growth.

If a Riser/Tie cable is required it shall follow the Cat 5e/6 wire following the same sequence of patch panel and wire manager.

The Data equipment can now follow with wire manager above and below each piece of equipment.

A rack mounted UPS shall be installed in the bottom of the data cabinet.

Small standalone devices are not to be placed on the floor, or stacked on top of each other within an equipment rack. A separate wall mounted/rack mounted shelf shall be furnished for this equipment.

5.3 MDF/IDF Room Cable Tray Systems

As required by Terra frame installations.

5.4 Cable Management

This section outlines the rules for routing all cable and wire within all MDF/IDF rooms.

A. All cables originating on the front of a patch panel or device, or connecting within a rack or between racks shall be routed through whatever rings, brackets, or Velcro straps are provided on either side of the rack. If no such rings or brackets are present, they shall be added.

B. The cables shall be routed symmetrically. That is, cables originating on the right half of the cabinet shall be routed through the rings or brackets on the right side of the cabinet, those originating on the left half shall be routed on the left side of the rack.

C. Upon completing a circuit disconnect, the jumper/patch cord shall be removed to eliminate the possibility of snagging and as a positive indication the port is unused. This does not apply at locations with dedicated port assignments.

5.5 MDF/IDF Room Environment

MDF/IDF room environmental requirements are important factors contributing to equipment performance, reliability and employee effectiveness.

5.5.1 Temperature and Humidity Standards

The following Heating, Ventilating and Air Conditioning (HVAC) standards shall be observed in all MDF/IDF rooms:

The temperature of any MDF/IDF room should be maintained between 55° F and 78° F.

The relative humidity of any MDF/IDF room should be maintained between 14% and 45%.

5.5.2 Lighting Standards

MDF/IDF rooms shall have sufficient lighting so that Maintenance and other personnel can easily see labels, equipment ports, and any other item of interest in the room including communications facilities. Lighting shall not be placed directly over cable trays.

5.5.3 Interior Finishes

Floors, walls, and ceilings shall be treated to eliminate dust. Finishes shall be light in color to enhance room lighting. Flooring materials having antistatic properties shall be selected. Sealed concrete or tiled floors are recommended. Carpet or rugs are not permitted in MDF/IDF rooms. Existing MDF/IDF rooms not in compliance with this requirement that contain electronics are to be reconditioned as soon as conditions allow.

5.5.4 Electrical Power Standards

The following electrical power standards should be observed in all communications rooms:

The standard service is two dedicated 120 VAC, 60 Hz outlets protected by a 20A circuit breaker and should be located on the cable tray directly above the cabinet. In the event that the outlets cannot be mounted above the cabinet, the outlets should be mounted either directly behind a floor-mounted cabinet or directly below a wall-mounted cabinet approximately 18” from the floor. In addition, a dedicated 120 VAC, 60 Hz outlet protected by a 20A circuit breaker should be installed on the wall that is covered with plywood for service providers approximately 18” from the floor.

Non-standard service is provided on a case-by-case basis to equipment requiring different service and require approval from the ITSD Communications Manager or his designated point of contact.

At locations where a Terra Frame is installed at least one 208v 30 amp and one 208v 20 Amp outlet should be located on the cable tray directly above the cabinet. In the event that the outlets cannot be installed above the cabinet, the outlets should be mounted on the wall directly behind the cabinet approximately 18” from the floor.

Note: When the equipment in a particular rack exceeds the capacity of the existing service outlets or associated 20A circuit breaker, installing additional service outlets dedicated to a second 20A circuit breaker is permissible.

Each MDF/IDF shall have a dedicated sub-power panel if requirements are sufficient enough to justify the cost. Each outlet in the room shall be clearly marked with panel and circuit designations. An isolation transformer may be included in the room design where known contaminated power exists.

An Equipotential Ground shall be maintained throughout each MDF/IDF Room. This is accomplished by designing so that no daisy-chained ground shall be extended farther than 20 feet from the first rack connected to a common ground. This means that when a point is reached that is 20 feet from the initial relay rack another run shall be made back to the common ground.

A design goal of 10 ohms resistance to earth ground will be used for all MDF/IDF Rooms. (MIL-STD-188-124A, Earth Electrode System for Communications Electronics).

All cabinets, cable trays, and shelving shall be connected to building ground as required by NEC article 250.

Care should be taken not to load a 20A circuit more than 16A normal operating current (by code).

Orange outlets indicate isolated ground and/or shielded power. These outlets are only to be used for Telecommunications and Test Equipment. Use of these dedicated outlets for other devices (i.e., vacuums, drills, etc.) can lead to disruption of telecommunications services. Isolated ground circuits differ from standard circuits in that they guarantee a hard wired ground (3 wire circuit) back to the electrical panel. Standard circuits are two wires back to the panel, with the ground provided by the conduit.

A minimum clearance of 36” shall be maintained in front of electrical panels per National Electrical Code 110.16. When considering clearance please take into account the depth of the electronic chassis to be installed in the rack.

5.5.5 Housekeeping

The following housekeeping guidelines shall be observed in all MDF/IDF rooms:
There should be no storage of items in the communications rooms.
Electronic equipment should not be stored as a spare in any MDF/IDF room.
No food or drink is allowed in any MDF/IDF.
A garbage receptacle, broom, and dustpan should be located within the MDF/IDF room, and each individual is responsible for clean up. The garbage receptacle and all contents should be removed from the room and stored properly after the job is completed or at the end of the day.

5.5.6 Security

MDF/IDF rooms contain critical equipment.

Doors should not be propped open, and positive door closures should be observed. Doors should be locked when the room is unattended. The data cabinet doors shall be locked upon completion of work performed in the cabinet.

5.6 Quality Assurance

This section describes the quality assurance procedure for MDF/IDF rooms.

5.6.1 Acceptance Procedure

An ITSD Cabling Plant Project Manager or designated representative shall inspect MDF/IDF rooms during new building construction or when cable and equipment work is done. Prior to any MDF/IDF room being accepted, all work shall meet engineering specifications, or appropriate standards stated within this document, or the current issue of Copper Wire and Cable Engineering Standards Procedure 201.16. For cable work, all installed pairs shall be tested using appropriate test equipment and the reading will be retained as a benchmark. For cable pair acceptance, all installed pairs shall be tested according to Engineering guidelines. All pairs shall be good and usable, with no defects.

5.7 Wiring Specifications

All wiring is to be installed according to the EIA/TIA wiring codes and shall adhere to all local wiring codes. All wire shall be terminated using the T568B wiring practices. All cable shall be Plenum rated.

Cat 5e cable used for Voice/Data applications shall have a Blue jacket terminated on Black jacks in the MDF/IDF and Electrical Ivory at the desktop.

Cat 5e cables used for wireless applications shall have a White jacket terminated White jacks in the MDF/IDF and RJ45 plugs at the field end.

Cat 5e cables used for security applications shall have a Violet jacket and shall be terminated on Violet jacks in the MDF/IDF and Violet jacks at the field end.

Cat 5e cables used for security applications shall have a Red jacket and terminated on Red jacket in the MDF/IDF and Red jacks at the field end.

Cat 6 cables used for Voice/Data applications shall have a Yellow jacket and terminated on Yellow jacks in the MDF/IDF and Electrical Ivory at the desktop.

Special colored or special use jacks at the customers request may be substituted at the field end with permission from the ITSD department.

Walls are to be dropped and wires concealed where possible with jacks located at a standard 18” height.

All cables shall be labeled on both ends and tested using a CAT 5e/6 certified test unit and results presented electronically to the ITSD department.

All cable pulled through a conduit in a floor or underground application shall be Underground Rated.

5.8 Floor Outlets

Floor boxes installed during the concrete pour or added to a building at a later time shall support Hubbell SystemOne 4x4 applications. Raised floor application shall support Hubbell Recessed Application

5.9 Underground Conduit

Conduit runs tying buildings together shall be buried at a depth of 36” and minimum of one 4” conduit placed in trench (actual conduit count will be determined by ITSD). This conduit shall be packed with four 1” inner duct each having a different color. There shall be 4” of flowable fill on top of the conduit and a caution marker tape placed in the trench 10” below the finished grade. A metallic wire shall be placed in the 4” conduit to provide a means of locating the pathway at a later date.

5.10 Aerial Cable

All aerial cables shall have a clearance of 18’ and shall have a ¼” messenger attached to the cable for support. All dead end or corner poles shall have down wire guides to relieve pole tension. Proper weather head and attachment points shall be required when cable enters a building. All building penetrations shall be sealed to prevent water and insect access.

6. Horizontal Cabling Standard

6.1 General

This section includes the Horizontal Cabling component of the Premise Distribution System.
Section Includes but is not limited to:

100 Ohm Unshielded Twisted Pair Cable (UTP)
Category 5E Eight –Position Modular Jacks
Category 5E Modular Patch Panels
Modular Faceplates
Surface Mount Boxes
Multi-User Telecommunications Outlet Assembly (MuTOA)

6.2 Products

6.2.1 100 Ohm Unshielded Twisted Pair Cable (UTP)

Provide 100 Ohm unshielded twisted pair cable that meets or exceeds the specifications for Category 5e UTP as defined in ANSI/EIA/TIA 568-B2-1.

Category 5e UTP cable shall be plenum rated.

6.2.1.1 Mechanical Characteristics

1. Pair Color Codes
   (a) Pair 1: Blue-White/with extruded Blue stripe on White single
   (b) Pair 2: Orange-White/with extruded Orange stripe on White single
   (c) Pair 3: Green-White/with extruded Green stripe on White single
   (d) Pair 4: Brown-White/with extruded Brown stripe on White single

2. The cable shall be round and manufactured such that the orientation of each pair, with respect to every other pair in the cable, is positively maintained. Each pair shall be separated from every other pair in the cable, by a physical barrier.

3. The diameter of the insulated conductor shall be 0.044 inch maximum. The insulated conductor used as the white single shall have a co-extruded colored stripe as defined in “Color Codes”. The stripe shall be of the same material as the insulation.

4. The cable shall be restricted to four-pair size to support a broad range of applications. The pair twist lengths shall be selected to ensure compliance with all requirements listed in the Transmission section.

5. The cable shall incorporate a ripcord under the jacket to facilitate jacket removal and allow easy access to the pairs.

6. The jacket shall be continuous, free from pinholes, splits, blisters or other imperfections. The nominal outside diameter of cables listed to CMP shall not exceed 0.250 inch. The nominal outside diameter of a cable listed to CMR shall not exceed 0.240 inch.

7. The cable jacket shall be printed with a minimum of the following information: Manufacturer, Manufacturer's part number, cable type, listing file number, number of pairs, listing type (i.e. CMP), and sequential footage markings. The print sequence shall be repeated every 2 feet.

8. The ultimate breaking strength of the completed cable shall be 400 N (90-lbf) minimum.

6.2.1.2 Transmission Specifications

1. DC Resistance
The DC resistance of any conductor shall not exceed 6.66 ohms per 100 m (328 ft) at or corrected to a temperature of 20° C.

2. DC Resistance Unbalance
The DC resistance unbalance between the two conductors of any pair shall not exceed 2.5% when measured at or corrected to a temperature of 20° C.

3. Mutual Capacitance
The mutual capacitance of any pair at 1 kHz and measured at or corrected to a temperature of 20° C shall be 4.6 nf per 100 m (328 ft) nominal.

4. Input Impedance
The cable shall have an input impedance of 100 ± 15 ohms for frequencies from 1 to 100 MHz, 100 ± 22 ohms for frequencies between 100 MHz and 200 MHz, and 100 ± 32 ohms for frequencies between 200 MHz and 300 MHz.

5. Return Loss
The return loss of any pair for a length of 100m (328 ft.) shall be greater than or equal to the values listed in Table 3.1.

6. Insertion Loss
The insertion loss is derived from swept frequency signal level measurements at the output of cable lengths greater than or equal to 100 m (328 ft). The maximum attenuation of any pair, in dB per 100m, measured at or corrected to a temperature of 20° C shall be less than or equal to the values listed below:

7. Near End Crosstalk (NEXT) Pair-to-Pair
NEXT loss is derived from swept frequency measurements using a network analyzer and s-parameter test set. The minimum pair-to-pair NEXT loss for any pair combination at room temperature shall be greater than or equal to the value listed in Table 3.1.

8. Equal Level Far End Crosstalk (ELFEXT) Pair-to-Pair

ELFEXT is derived from swept frequency measurements using a network analyzer and s-parameter test set. The minimum pair-to-pair ELFEXT loss for any pair combination at room temperature shall be greater than or equal to the value listed in Table 3.1.

9. Power Sum NEXT
Power Sum NEXT is derived from swept frequency measurements using a network analyzer and s-parameter test set. The minimum Power Sum NEXT for any pair combination at room temperature shall be greater than or equal to the value listed in Table 3.1.

10. Power Sum ELFEXT
Power Sum ELFEXT is derived from swept frequency measurements using a network analyzer and s-parameter test set. The minimum Power Sum ELFEXT for any pair combination at room temperature shall be greater than or equal to the value listed in Table 3.1.

11. Table 3.1 – Category 5e Permanent Link Limits in dB per ANSI/TIA/EIA-568B.2-1

Frequency MHz	Insertion Loss	NEXT pair-to-pair	NEXT power sum	ELFEXT pair-to-pair	ELFEXT power sum	Return Loss
1.0	2.1	>60	>57	58.6	55.6	19.0
4.0	3.9	54.8	51.8	46.6	43.6	19.0
8.0	5.5	50.0	47.0	40.6	37.5	19.0
10.0	6.2	48.5	45.5	38.6	35.6	19.0
16.0	7.9	45.2	42.2	34.5	31.5	19.0
20.0	8.9	43.7	40.7	32.6	29.6	19.0
25.0	10.0	42.1	39.1	30.7	27.7	18.0
31.25	11.2	40.5	37.5	28.7	25.7	17.1
62.5	16.2	35.7	32.7	22.7	19.7	14.1
100.0	21.0	32.3	29.3	18.6	15.6	12.0

12. Propagation Delay
The propagation delay of any pair at 10 MHz shall not exceed 545ns/100m.

13. Propagation Delay Skew
The propagation delay skew between any two pairs shall not exceed 25 ns/100m at 10 MHz.

14. Dielectric Breakdown
The dielectric breakdown of the cable shall be at least 2500 volts DC conductor to conductor.

6.2.1.3 Acceptable Manufacturer's and Cable Type

1. Panduit
2. General

6.2.2 Category 5e, Eight-Position Modular Jacks (RJ-45)

A. Shall meet or exceed Category 5e connecting hardware specifications for all pair combinations up to 250 MHz

B. Eight-Position with IDC termination

C. Available in both straight and angled mounting

D. Removable from front or rear of faceplate

E. Compatible with both T568A and T568B wiring options

F. Available in the following colors: Black, White, Red, Gray, Blue, Orange, Ivory, Light Ivory, Alpine White

G. Slim design to allow jacks to be side, stacked for high density - Six outlets in single-gang

H. Available laser-printed customized tabs

I. Additional type modules available for fiber and coaxial F-type connectors

6.2.2.1. Acceptable Manufacturer's

1. Panduit

6.2.3 Category 5e Modular Patch Panels

A. 19" rack-mountable, 48-port or 24-port Category 5e patch panels shall be used for the termination of horizontal UTP cable dedicated for data applications.

B. Shall meet or exceed Category 5e connecting hardware specifications for all pair combinations up to 250MHz

C. Eight-Position with IDC termination

D. Panels shall be wired for T568A configuration

E. Panels shall occupy 1 or 2 rack units

6.2.3.1 Acceptable Manufacturer's

1. Panduit

6.2.4 Category 5e IDC Wall-Mounted Termination Blocks

A. Insulation Displacement Connection (IDC) type termination block shall support Category 5e applications and facilitate cross connection and interconnections using patch cords.

B. The wiring blocks shall be fire retardant, molded plastic consisting of horizontal index strips for terminating conductors. These index strips shall be marked with five colors on the high teeth, separating the tip and ring of each pair, to establish pair location. A series of fanning strips shall be located on each side of the block for dressing the cable pairs terminated on the adjacent index strips. Clear label holders with the appropriate colored inserts shall be provided with the wiring blocks. The insert labels shall contain vertical lines spaced on the basis of circuit size (3-, 4-, or 5-pair) and shall not interfere with running, tracing or removing jumper wire/patch cords.

C. The terminating block shall be able to accommodate over 500 repeated insertions without incurring permanent deformation and it shall pass the reliability test of no more than one contact failure in 10000 connections.

6.2.4.1 Acceptable Manufacturer's

1. Panduit

6.2.5 Modular Face Plates

A. Provide faceplates for telecom outlets.
    1. Unless otherwise indicated, provide stainless steel faceplates with brushed finish.
    2. Faceplates shall have label holders.

B. Faceplates shall accommodate the following configurations
    1. Single Gang Faceplates
        (a) One, two, three or six modules

C. May be used with flat or angled modules

D. Available in white, gray, ivory, light ivory and stainless steel.
    1. Submit color for approval prior to ordering

6.2.5.1 Acceptable Manufacturer's

1. Panduit

6.2.6 Surface Mount Boxes

A. Surface mount boxes shall be available in one, two, four and six port configurations, with modules to support UTP, fiber and coax.

B. Available in black, white, gray, ivory and light ivory.

6.2.6.1 Acceptable Manufacturer's

1. Panduit

6.2.7 Multi-User Telecommunications Outlet Assembly (MuTOA)

A. Constructed of durable UV resistant, high impact plastic.

B. Compatible with single or dual gang electrical box.

C. Accommodates any combination of up to 18 ports of mixed media or up to 36 fibers.

6.2.7.1 Acceptable Manufacturer's

1. Panduit

6.2.8 Wall-Phone Jack Assembly

A. Provide stainless steel duplex faceplate equipped with mounting lugs designed to mate with corresponding telephone base plate and single 630B.

6.2.8.1 Acceptable Manufacturer's

1. Panduit

6.3 Execution

6.3.1 Installation

A. Install all equipment and components in accordance with manufacturer's written instructions with sound engineering practices as established by EIA/TIA and in compliance with NEC and recognized industry practices, to ensure that all items comply with specifications and serve intended purposes.

B. Contractor work force, sub-contractors and material suppliers shall review and comply with all safety, security rules, codes and regulations, applicable to construction site personnel.

C. Horizontal Cabling

1. Contractor shall supply horizontal cables to connect each information outlet to the backbone subsystem.
2. Each work location shall have one or more runs of Category 5e UTP cable, placed in home run fashion from the location to the nearest intermediate telecommunications closet. Splicing of station cables is not permitted. Station cable shall be Blue in color or unless otherwise identified..
   (A)Terminate station cable (Blue) on rack mounted 24 or 48 port modular patch panels.
3. A blank cover plate shall be provided on all outlet boxes where cable is not initially installed.

4. Terminate Category 5e four-pair horizontal cable in eight-pin modular jacks at the information outlet. Eight pin modular jacks shall have insulation displacement terminals and terminated to comply with the T568A wiring configuration.
5. Eight-Position Jack Pin/Pair Assignments (Designation T568A)

Pair One	Pins 4/5	White-Blue/Blue
Pair Two	Pins 3/6	White-Orange/Orange
Pair Three	Pins 1/2	White-Green/Green
Pair Four	Pins 7/8	White-Brown/Brown

6. For wall-mounted telephones, terminate cable in modular jack with wall-plate for mounting telephone instrument.
7. Contractor shall observe the bending radius and pulling strength requirements of the 4-pair UTP cable during handling and installation.
8. All horizontal cabling shall be installed in conduit and/or cable tray. Cable from the tray to the wall outlet shall be routed in conduit.
9. Contractor shall install sufficient slack in cable to prevent cable service wear and to allow for access and service of the cabling system. Provide a minimum 12 inches of slack at the information outlet and 1 meter of slack at the patch panel or termination block.
10. Slack behind faceplate shall be pulled back into raceway to prevent damage to connectors.
11. Every effort will be made to schedule the requirements under this Contract in such a manner so as to complete all above ceiling work prior to ceiling tile installation. In the event the Contractor is required to remove ceiling tiles, such work shall not break or disturb grid and must be coordinated with the General Contractor.
12. Velcro cable ties shall be used on Cat 5E and Cat 6 UTP cables.

D. Pull Strings

1. Initial pull strings in riser conduits shall be provided by the Division 16 electrical contractor.
2. Contractor shall re-install pull strings in all riser conduits that have capacity for additional cables.
3. Contractor shall install pull strings in all inner duct.

E. Cable Labeling

1. Install cable labels on both ends of horizontal cable. Labels shall remain intact after termination.

F. Miscellaneous Equipment

1. Contractor must provide any necessary screws, anchors, clamps, tie wraps, distribution rings, wire molding, miscellaneous grounding and support hardware, necessary to provide a professional and complete installation of the System.

G. Special Equipment and Tools

1. It shall be the responsibility of the Contractor to furnish any special installation equipment or tools necessary to properly complete the System. This may include, but is not limited to, tools for terminating cables, testing and splicing equipment for copper/fiber cables, jack stands for cable reels, cable wenches, personnel lifts and test equipment.

7. Backbone Cabling Standard

7.1 General

7.1.1 Summary

A. This section includes the Backbone Cabling standard of the Premise Distribution System for the City Of San Antonio.

B. Section Includes but is not limited to:
1. Fiber Optic Riser Cable – Single-Mode
2. Fiber Optic Riser Cable – Multimode
3. Fiber Optic Termination Hardware
4. Multi-Pair Copper Riser Cable
5. Multi-Pair Copper Riser Termination Hardware

7.2 Products

7.2.1 Fiber Optic Cable – General

A. Fiber optic cable segments shall be comprised of individual multimode and single-mode fiber optic cables. Composite cables with multimode and single-mode in a common sheath shall not be used.

B. Cables shall be UL Listed as Optical Fiber Non Conductive Riser (OFNR)

C. Cables shall be marked as required by national and local electrical codes.

D. Individual fibers shall be color coded for identification. The color-coding shall be in accordance with EIA/TIA-598 Color Coding of fiber Optic Cables.

7.2.2 Fiber Optic Riser Cable – Single-Mode

A. Fibers shall comply with EIA/TIA 492CAAA Standards

B. Characteristics
1. Nominal core diameter of 7um and a cladding diameter of 125um.
2. Maximum attenuation: 0.4 dB/km @ 1310 nm and 0.3 dB/km @ 1550 nm.
3. Fibers shall have D-LUX ® coating or approved equivalent to ensure color retention, minimize micro-bending losses and improve handling. The coating shall be mechanically strippable.

7.2.2.1 Approved Manufacturer's

1. Chromatic
2. CommScope
3. Corning
4. Systimax

7.2.3 Fiber Optic Cable – Multimode

A. Compliant with EIA/TIA 492AAAC and ANSI/TIA/EIA-568-B.3.1 Standards

B. Laser-optimized 62.5um fiber

C. Characteristics
1. Dielectric, Loose Tube Construction
2. Graded index, 62.5/125 um core/cladding, dual window 850 and 1300 nanometers
3. Numerical aperture of 0.2 plus or minus 0.015.
4. Maximum attenuation: 3.0 dB/km @ 850 nm and 1.0 dB/km @ 1300 nm.
5. Minimum bandwidth: 2000 MHz/km @ 850 nm and 500 MHz @ 1300 nm.
6. Gigabit Ethernet Distances: 300m @ 850nm and 700m at 1300nm.
7. 10 Gb/s Ethernet Distances: 300m using 850nm VCSELs
8. All fibers shall be color coded to facilitate individual fiber identification. Fibers shall have D-LUX ® coating or approved equivalent to ensure color retention, minimize micro-bending losses and improve handling. The coating shall be mechanically strippable.

7.2.3.1 Approved Manufacturer's

1. Chromatic
2. CommScope
3. Corning
4. Systimax

7.2.4 Fiber Optic Connectors – Single-Mode

A. Provide LC type fiber optic connectors on single-mode fiber optic cable with the following minimum specifications:.
1. Insertion Loss of 0.2dB typical
2. Reflection of 0.2dB typical
3. Durability for 1000 rematings with less than 0.2db change
4. Provide blue boot on single-mode connectors

7.2.4.1 Approved Manufacturer's

1. Corning
2. Ortronics
3. Siemon
4. Systimax

7.2.5 Fiber Optic Connectors – Multimode

A. Provide LC type fiber optic connectors on multimode fiber optic cable with the following minimum specifications:.

1. Insertion Loss of 0.2dB typical
2. Reflection of 0.2dB typical
3. Durability for 1000 rematings with less than 0.2db change
4. Provide beige boot on multimode connectors

7.2.5.1 Approved Manufacturer's

1. Corning
2. Ortronics
3. Siemon
4. Systimax

7.2.6 Fiber Optic Termination Panels

A. Rack Mountable in standard EIA 19 inch equipment rack

B. Provide separate panels for multimode and single-mode fiber

7.2.6.1 Approved Manufacturer's

1. Panduit

7.2.7 Multi-Pair Copper Riser Cable

A. Shielded 24 AWG multi-pair copper cables shall be used as the vertical riser cables. The cable shall support voice, data and building service applications. The bending radius and pulling strength requirements of all backbone cables shall be observed during handling and installation. The multi-pair copper cables shall be riser rated and placed in conduit.

B. ARMM Shielded Non-Plenum Riser Cable

1. Shielded non-plenum riser cable shall consist of solid-copper conductors insulated with expanded polyethylene covered by a PVC skin, be conformance tested to meet EIA/TIA 568A for Category 3 cables, be UL® and c (UL®) Listed as CMR. The core shall be overlaid with a corrugated aluminum sheath, which is adhesively bonded to an outer jacket of PVC plastic to form an ALVYN sheath.
2. The PVC sheath shall have improved frictional properties, allowing it to be pulled through conduit without the use of lubricants.
3. The copper riser cable shall meet or exceed the electrical specifications listed below:
   a. Average DC Resistance: 8.7 ohms/100m, maximum
   b. Mutual Capacitance @1kHZ: 5.25 nF/100m, maximum

7.2.7.1 Approved Manufacturer's

1. Superior Essex

2. General Cable
3. Mohawk/CDT
4. Systimax

7.2.8 Copper Riser Termination Hardware

A. Rack Mountable in standard EIA 19 inch equipment rack

B. Cabling will be terminated Category 5e T568B termination component.

7.2.8.1 Approved Manufacturer's

1. Panduit

7.3 Execution

7.3.1 Installation

A. Contractor work force, sub-contractors and material suppliers shall review and comply with all safety, security rules, codes and regulations, applicable to construction site personnel.

B. Fiber cable shall be installed in one continuous segment. Splicing of fiber cables between telecom rooms is not permitted unless otherwise identified by the City.

C. Coils of slack cable (1 meter) shall be provided in each fiber termination panel.

D. Ten meters of cable (maintenance loop) shall be neatly coiled and secured to the wall in each telecom room.

E. Label all cables as specified in Section 17730.

8. Support Structures

8.1 General

Support structures are necessary to allow installation of telecommunications wire, cable, connecting hardware, and associated apparatus. Theses structures comprise components such as equipment racks, cabinets, distribution rings, hangers, J hooks, plywood backboard, cable trays, conduits, slots, sleeves, and their associated hardware.

8.2 Pathways

8.2.1 General

When installing pathways, it is important to ensure that the route for the pathways are clear of obstructions, such as heating, ventilation, and air conditioning HVAC ducts, large pipes, and structural beams within the building. Whenever fire barriers are penetrated, they shall be firestopped to maintain the fire rating of the barrier.

Determine the entire route of a pathway before installation of supports. The route shall be surveyed prior to installation to ensure that obstacles are avoided. For example, if a wall penetration cannot be established, then the work done to install the support hardware may have to be repeated or modified to get to another location. Penetrations through fire rated walls and floors should be accomplished before installing the hangers, clamps, and trapezes. Once the pathway and cables are installed, firestop the penetrations.

8.2.2 Cable Trays

This section addresses the installation of a cable tray within a telecommunications room (TR), equipment room (ER) or entrance facility (EF). However, the principles involved can be applied to installing cable trays between telecommunications spaces (e.g., TR, ER, EF) and as horizontal or backbone pathways.

Cable trays may be installed on single or multiple levels. Corners and changes in horizontal plane are accomplished by using sections of cable tray cut from standard stock and connected together with manufacturer specified hardware. The connecting hardware permits all angles, both vertical and horizontal, to be accommodated over the entire route of the cable tray.

Cable trays shall be wall mounted or supported by the building structure from above using all threaded rods (ATR) and manufacturer specified attachments. ATR shall be installed using properly sized anchors and correct attachment hardware. Select the ATR to support the maximum load for which the cable tray is designed.

Wall mounted support brackets may be used to support cable trays. Where appropriate, wall bracket supports are installed on a wall along the route of the cable tray. The number of brackets and specific spacing interval is dependent upon the rated load the cable tray must support. Supporting attachments shall be made on a cable tray not more than 24 inches from the ends, and at joints between two sections. Additional supports are also required every 5 ft thereafter. Anchors to attach the brackets shall be sized to support the rated load of the cable tray.

Installation of a mesh cable tray is accomplished by using light hand tools, power drills, and an offset blade bolt cutter. Unlike traditional cable trays, this system can be formed to adjust to changes in elevation and horizontal direction without the need for application specific adapters. Corners and changes in horizontal level are accomplished by selective cutting of the mesh in the cable tray at specific points using bolt cutters and connecting the points cut together by means of manufacturer specified attachment hardware.

Cable retaining posts are available in 6 to 12 inch lengths to allow additional cables to be installed to a depth exceeding that of the cable tray. Without these devices the cable would not be confined by the edges of the cable tray and may fall from the tray. The load rating of the cable tray and support elements shall not be exceeded by the addition of cables to this pathway.

8.2.2.1 Installation Practices

A cable tray is installed from one wall to the opposite wall in a telecommunications room using angled wall supports to secure the cable tray at each end, and by wall bracket supports in the middle. When installing cable trays, maintain a minimum of 12 inches above the tray and 3 inches between the tray and the ceiling tile.

8.2.3 Distribution Rings and Spools (mushrooms)

Distribution rings and half-distribution-rings are used to support small bundles of cables as they route from one termination point on the plywood backboard to another. However, they should not be substituted for a cable tray. Spools are typically used for cross-connect routing.

Distribution-rings are available in many sizes, shapes, materials, and colors.

Spools are constructed of plastic and contain a center-mounted screw for attachment to plywood backboards. They are also available with threaded bolts for installation on equipment racks.

8.2.4 Conduits

8.2.4.1 General

Conduit installations should be designed to be parallel or perpendicular to permanent walls of the building. When installing conduits in a ceiling, a minimum of 3 inch vertical clearance is required above the ceiling tiles. The As-Built drawings should indicate the location of each conduit and where they terminate in the room.

Conduit runs tying buildings together shall be buried at a depth of 36 inches and a minimum of one 4 inch conduit placed in trench (the actual conduit count will be determined by ITSD). This conduit shall be packed with four 1 inch inner ducts each being a different color. There shall be 4 inches of flowable fill on top of the conduit and a caution marker tape placed in the trench 10 inches below the finished grade. A metallic wire is to be placed in the 4 inch conduit to provide a means of locating the pathway at a later date.

8.2.4.2 Segment Limits

No one conduit segment shall be more than 100 ft in length with no more than two 90 degree bends allowed in one segment. Exceeding these limits increases the coefficient of friction in the cable pulling operation and can damage the cable by possibly stretching or changing the cable geometry.

8.2.4.3 Elbows and Bends

Factory-manufactured bends (sweeps) are recommended for conduit installation, especially for conduits over 1.25 inch trade size. Reducing the recommended bending radius can result in cable damage during the cable pulling process. Field manufactured bends, if not accurately fabricated, may turn out elliptical (oval) in shape rather than round. This elliptical shape is generally caused by the action of the tools used to bend the conduit. See Table 1 for minimum bend radii of conduits.

Table 1.

If the conduit has an internal diameter of …	**The bend radius shall be at least …**
2 inches or less Diameter	6 times the internal conduit diameter
More than 2 inches diameter	10 times the internal conduit diameter

If needed, flexible metal conduit may be used. However, the length of flexible metal conduit should be less than 20 ft a run. Flexible metal conduit runs exceeding 6 ft shall be bonded by an equipment bonding conductor.

8.2.4.4 Conduit Terminations

Conduits that enter a room (e.g., telecommunications room) should be terminated on the wall to enable orderly routing of the cables to termination hardware within the room. Conduit ends should be positioned adjacent to a corner of the backboard (in the case of a single piece of plywood) or in the corner of the room (where multiple sheets of plywood are installed around the perimeter walls of the room). If conduits cannot be located in these positions, cable trays should be used to route the cables from one location in the room to another.

When entering from below grade or between floors, the conduits shall extend 1 inch to 3 inches above the floor slab or building structure, which will prevent cleaning solvents or other fluids

from flowing into the conduit. Conduits shall be reamed and installed with bushings, which will mitigate sheath damage when pulling cable(s).

Where several large backbone cables are passing vertically through the room, a vertical cable tray or other suitable vertical attachment should be appropriately positioned to support the cables. When a cable tray is used, the cables should be secured to the cable tray in an orderly fashion to ensure that they are properly supported and the entire weight of the cable is equally distributed over several cable tray rung supports.

8.2.4.5 Bonding and Grounding Conduits

Conduits shall be bonded to the equipment grounding system. Conduits shall be bonded to either the telecommunications main grounding busbar (TMGB) or to a telecommunications grounding busbar (TGB) where present.

Grounding bushings are typically installed on the end of the conduit. For electrical metallic tubing (EMT), a set-screw fitting is placed on the end of the conduit and the grounding bushing screwed on to the fitting and tightened using the appropriate tool. On intermediate metal conduit (IMC) and rigid metal conduit (RMC), a grounding bushing may be screwed onto the threaded end of the conduit and tightened until secure. A threadless grounding bushing, installed with set screws, is also available which can provide an alternate means for locating the ground lug.

In a TR or ER, each conduit can be attached to the channel stock with a conduit strap. A single conduit in each run of channel stock can be equipped with a grounding bushing. The entire section of channel stock can effectively be grounded using a single bushing and ground wire. An alternative method is to install a grounding connection onto the channel stock and then route the ground conductor to the nearest TMGB or TGB.

Where a small number of conduits are installed, a grounding bushing should be installed at the end of each conduit for the attachment of a ground wire, which connects to the TMGB or TGB. Conduits in close proximity to each other can be bonded together and one of them will be bonded to the TMGB or TGB.

8.2.4.6 Securing Conduit

Conduits shall be secured to prevent movement.

Throughout the conduit route, cross bracing may be used to stabilize the conduit(s), which will mitigate lateral movement during cable pulling operations. Stabilizing the conduits can be accomplished by the use of conduit straps, channel stock, or ATR placed at opposing angles (180 degrees opposite from each other). The same anchoring mechanisms can be used to secure the straps and cross braces as used to hang the conduits from the building structure.

When terminating conduits at a plywood backboard (e.g., in a telecommunications room), they should be secured to the top of the plywood backboard or just above the backboard when entering from overhead. Securing and terminating conduits above the plywood backboard allows for full usage of the plywood backboard for termination and routing of cabling. Channel stock may be used to attach the conduits to the room wall.

0

8.2.4.7 Stub-up/Stub-out Conduits

These terms imply that a section of conduit is used to provide a pathway in a vertical and then horizontal direction from a point of termination. While similar in many ways, they are significantly different from an installation perspective. Stub-up/stub-out conduits are generally not grounded.

8.2.4.8 Stub-up Installation

Stub-ups are usually single sections of 3/4" metal conduit or unless otherwise identified by the City. They typically originate at a 4 inch square box installed in drywall or paneling. The stub-up continues vertically through the wall cavity where it penetrates the wall cap and stubs up into the ceiling area. It terminates at that point and is equipped with a conduit bushing and a pull string. Sometimes the stub-up is equipped with a 90-degree bend that is turned back into the room, especially when installed in fire- or smoke-rated walls.

8.2.4.9 Stub-out Installation

Stub-outs are short runs of 3/4" metal conduit or unless otherwise identified by the City.. They typically originate at a 4 inch square box installed in drywall or paneling. The stub-out continues vertically through the wall cavity, where it penetrates the wall cap, and continues into the ceiling area. In a typical installation, the conduit continues through the ceiling area and into an adjacent hallway. The conduit may terminate as it exits the wall into the hallway, or it may continue to another type of supporting structure such as a cable tray or ladder rack. It terminates at that point and is equipped with a conduit bushing and a pull string.

8.2.5 Supports

There are many types of supports available for conduit installation. Three examples of conduit supports are <u>pipe hangers</u>, <u>trapeze</u>, and a <u>one piece conduit hanger</u>.

A pipe hanger is a pear shaped device that is attached to an ATR. It is suspended from the building structure by an anchor or beam clamp and a section of ATR. Anchors are installed in the concrete structure of the above floor. When concrete is not available and steel trusses are installed in the building, beam clamps can be used to support the ATR and hanger. The selection of anchors and beam clamps should be determined by the load of the conduit and cable to be supported. The ATR is attached to the pipe hanger with nuts and lock washers. The assembly is then capable of supporting the conduit that is installed through the pipe hanger.

Another type of conduit support is a trapeze. This is a device that is made by using two ATRs and a section of channel stock. The ATR is suspended from the building structure and attached to each end of the channel stock using appropriate nuts and washers. The conduits are then attached to the channel stock with conduit straps and locked in place.

A third type of conduit support is a one piece conduit hanger. This is a device that is manufactured in such a way that the compression bolt is part of the hanger itself and, when loosened, it will not come off the hanger. This type of hanger can be mounted directly to the building structure, to red iron, or to a specialized hanger mount.

8.2.6 Surface Raceway

Surface raceway is available in both metallic and nonmetallic versions. When installing surface raceway, follow manufacturer's instructions. Metallic surface raceway shall be bonded to the equipment grounding system.

8.3 Spaces

8.3.1 Plywood

Plywood backboards are recommended to be installed around the entire perimeter of rooms (e.g., telecommunications room). This will allow cables to be installed and terminated around the walls of the room, now or in the future. It may also facilitate attaching cables that pass through vertically to rooms above or below.

A minimum of two walls should be covered with rigidly fixed 0.75 inch A-C grade plywood, preferably void free, 8 ft high, capable of supporting attached equipment. The plywood should be installed with the "A" grade side exposed and the "C" grade side against the building wall or structure. Plywood should be either fire-rated or covered with two coats of fire retardant paint as required by the City Of San Antonio, ITSD.

Plywood sheets used for backboards should be installed with the longest dimension reaching from the floor level up toward the ceiling to its 8 ft height. Plywood shall be installed in such a manner that there is no separation between adjacent sheets. When installing plywood in a corner, the plywood backboard shall be installed to form a smooth, tight, gap-free corner.

The plywood backboard shall be secured on top of existing drywall or to wall studs of the room. When installing plywood on drywall, which has already been installed on metal studs, verify the load rating of the wall before installing the plywood. If the load rating will permit this type of installation, use a minimum of 0.25 inch toggle bolts (butterfly bolts) to ensure the stability of the installation. Toggle bolts should be installed at approximately 24 inch spacing around the entire perimeter of the plywood sheet. The toggle bolts should be installed 2 inches from the edges of the sheet of plywood on 24 inch centers.

8.3.2 Equipment Racks

Equipment racks should meet the requirements of ANSI/EIA-310-D. Equipment racks shall be secured to the building structure and should be accessible from the front and rear. Typical spacing is 36 inches in front and back of the rack, and 30 inches on the sides. Where equipment racks are separated from a wall, cable trays should be installed from the wall to the top of the equipment racks. This provides a pathway for cables to be routed between equipment racks. Transitions between cable trays and equipment racks shall be equipped with a means that

ensures minimum cable bend radii is maintained. All racks shall be bonded to the TGB or TMGB using a minimum 6 AWG copper conductor.

Cables should be routed on the rear sides of the rack using cable management accessories attached to the rear of the rack's vertical channels or in cable management channels on the sides of the rack.

8.3.3 Floor Mounted Cabinets

Ensure that the floor-mounted cabinets will fit the footprint allocated for them prior to installation. If there is a question regarding the space allocated, refer to design drawings or contact the designer for further clarification.

Cable access to floor mounted cabinets is normally provided by knockouts (pre-punched holes) in the cabinet side, top, or bottom. Cable trays and ladder racks provide a means of routing cables to the cabinet. Transitions between cable trays and cabinets shall be equipped with a means that ensures minimum cable bend radii are maintained. Verify the cable installation methods specified by the manufacturer prior to attempting to install cabinets.

When floor mounted cabinets are used, the grounding and bonding instructions shall be followed.

8.3.4 Wall-mounted Equipment Racks and Cabinets

When wall-mounted equipment racks and cabinets are required, the grounding and bonding instructions shall be followed.

8.4 Bonding Infrastructure

8.4.1 General

Grounding and bonding are terms that are used to define the practice of connecting all metallic components of a system together to a main building ground electrode, for the purposes of reducing or eliminating the differences of potential between all of the utilities inside of the building structure. See ANSI /J-STD 607 A.

8.4.2 Bonding Conductor

Ground conductors and a ground bus shall be installed so that they are not obstructed by cable trays, cables, or terminating hardware. Ground wires and bonding conductors should always be installed in the straightest and shortest route between the origination and termination point. A minimum bend radius shall not be less than eight times the conductor diameter. A sharp bend may interfere with the effectiveness of the grounding system since it will modify the characteristics of the grounding path.

8.4.3 Summary

This section includes the Telecommunications Grounding and Bonding component of the Premise Distribution System for the City Of San Antonio.

Section Includes but is not limited to:
1. Telecommunications Bonding Backbone (TBB)
2. Telecommunications Main Grounding Busbar (TMGB)
3. Telecommunications Grounding Busbar (TGB)
4. Warning Labels

Product Data:

1. Manufacturer's catalog data and applicable special fabrication and installation details.

2. Installation, terminating and splicing procedures.

3. Instructions for handling and storage.

4. Dimensions and weights.

5. Conformance Certificate and Quality Assurance Release: Signed by QAP Manager (Section 01450). Specifically identify products and include purchase order number, supplements, and item number where applicable. Indicate that requirements are met and identify approved deviations.

8.4.4 Design Requirements

A. Design grounding system following NEC Article No. 250 – Grounding, IEEE 142-1991-Recommended Practice for Grounding of Industrial and Commercial Power Systems.

B. Design Standards:

1. Completely protect above-surface structures and equipment.

2. Calculate system on the basis of existing soil resistivity.

3. If cathodic protection for underground sewer pipe is installed (see applicable Division 2 Sections), ensure the pipe is not connected to the general grounding system, either directly through grounding cable or indirectly through grounded electrical devices connected to the pipe. Electrically isolate electrical devices from sewer pipe.

8.4.5 Products

8.4.5.1 Communications Grounding Conductors

Insulated copper American Wire Gauge (AWG) wire following ASTM-B3, ASTM-B8 and ASTM-B33, of following sizes:

1. Main ground source feed from the building ground system to the Telecommunications Main Ground Busbar (TGMB): No. 3/0 AWG green insulated standard copper ground wire.

2. Telecommunications Bonding Backbone (TBB), from the TMGB to the Telecommunications Ground Busbars (TGB): No. 3/0 AWG green insulated stranded copper ground wire.

3. TGB to equipment cabinets and racks, conduits, cable raceways, etc.: No. 6 AWG green insulated stranded copper ground wire.

8.4.5.2 Grounding Connectors

Connectors shall be a copper alloy material and two-hole compression lug type at all connecting ends.

8.4.5.3 Ground Rods

A minimum of ten feet long, 3/4-inch diameter, copper-clad steel.

8.4.5.4 Telecommunications Main Grounding Busbar

The TMGB, located in the main distribution facility (MDF), shall comply with the following:

1. The TMGB shall be a predrilled copper busbar with standard NEMA bolt hole sizing and spacing for the type of connectors to be used.

2. The TMGB shall be sized for the immediate requirements and allow for growth. The minimum dimensions shall be ¼ inch thick by 4 inches wide by 23 inches long.

3. The TMGB shall be electrotin plated for reduced contact resistance.

4. The TMGB shall have pre-drilled holes, which shall support a minimum of two tiers of eight No. 6 AWG copper two-hole compression lugs.

5. The TMGB shall be an ASTM-B187-C11000 Copper bar, Cooper B-Line part number SB-476 or submitted and owner-approved equivalent, and shall be suitable for use with two-hole compression-type copper lugs.

6. The TMGB shall comply with ANSI/EIA/TIA 607.

8.4.5.5 Telecommunications Grounding Busbar

Each TGB, located in the intermediate distribution facilities (IDFs), shall comply with the following:

1. The TGB shall be a predrilled copper busbar with standard NEMA bolthole sizing and spacing for the type of connectors to be used.

2. The TGB shall be sized for the immediate requirements and allow for growth. The minimum dimensions shall be ¼ inch thick by 4 inches wide by 23 inches long.

3. The busbar should be electrotin plated for reduced contact resistance.

4. The TMGB shall have pre-drilled holes, which shall support a minimum of two tiers of eight No. 6 AWG two-hole copper compression lugs.

5. The TMGB shall be an ASTM-B187-C11000 Copper bar, Cooper B-Line part number SB-476 or submitted and owner-approved equivalent, and shall be suitable for use with two-hole compression-type copper lugs.

6. The TMGB shall comply with ANSI/EIA/TIA 607.

8.4.5.6 Equipment cabinet and rack ground busbar

1. Provide and install a ground busbar in all relay racks, frame racks and equipment cabinets to be used as an equipment grounding bus.

2. The busbar shall be for equal-flange (channel) 19-inch rack width and shall include ground bar, splice plate and #12-24 mounting hardware.

3. The minimum dimensions shall be ¾ inch in width by 3/16 inch in thickness.

4. The busbar shall have pre-drilled holes, which shall support a minimum of eight No. 6 AWG two-hole copper compression lugs.

5. Unless specified otherwise, the busbar shall be Cooper B-Line part number SB-579-03 or submitted and owner-approved equivalent, and shall be suitable for use with two-hole compression-type copper lugs.

6. The busbar shall comply with ANSI/EIA/TIA 607.

8.4.6 System Requirements

8.4.6.1 General

1. All conductor wire, busbars and conduit shall be UL listed.

2. The communications ground system shall be separate and independent from all power grounding.

3. Power grounding and/or bonding shall not be allowed to interfere or provide any back feed or be a conductor to the separate communications ground system source or to any communications bonded materials or equipment.

8.4.6.2 TMGB

1. The main ground source feed to the TMGB in the MDF shall be a separate and independent feed from the main building ground system.

2. The main ground source feed shall be a No. 3/0 AWG green insulated stranded copper ground wire from the building or counterpoise ground system to the TMGB in the MDF.

3. The No. 3/0 AWG green insulated stranded copper ground wire shall be installed in a two-inch metallic conduit.

4. The No. 3/0 AWG green insulated stranded copper ground wire connections shall be exothermically welded at connecting ends.

a. The first weld shall be at the main building electrical entrance facility grounding electrode conductor ground system end.

b. The second weld shall be at the TMGB.

8.4.6.3 TBB and TGB

1. The TBB originates at the TMGB and shall be extended from the TMGB to each TGB within the MDF and throughout the building using the telecommunications backbone pathways, to the TGB(s) in each IDF. The minimum TBB conductor size shall be a No. 3/0 AWG green insulated stranded copper ground wire. The TBB shall be installed in a two-inch metallic conduit.

2. The communications ground system shall be a separate ground system and be completely independent and isolated from all power grounding.

3. The TBB No. 3/0 AWG green insulated stranded copper ground wire connections shall be exothermically welded at connecting ends.

a. The first weld shall be at the TMGB.

b. The second weld shall be at TGB.

8.4.6.4 Equipment cabinets and racks

1. All cabinets and racks shall be provided with a separate communications ground, consisting of a No. 6 AWG green insulated stranded copper ground wire, from the nearest TGB in the room and home run to each cabinet or rack ground busbar. Unless otherwise noted in the drawings, do not loop ground wire.

2. All ground raceways within cabinets and racks shall be an insulated one-inch metallic flexible raceway and shall include the proper transition electrical metallic tubing (EMT) fittings.

3. All ground raceways and fitting connections shall be bonded

8.4.7 Execution

8.4.7.1 Examination

A. Field Measurements: Verify dimensions in areas of installation by field measurements before fabrication and indicate measurements on shop drawings. Coordinate fabrication schedule with construction progress to avoid delaying the work.

B. Established Dimensions: Where field measurements cannot be made without delaying the work, establish dimensions and proceed with fabricating units without field measurements. Coordinate supports, adjacent construction, and fixture locations to ensure actual dimensions correspond to established dimensions.

8.4.7.2 Preparation

A. Contractor's on-site RCDD supervisor shall review, approve and stamp all shop drawings, coordination drawings and record drawings.

B. Complete site preparation and soil compaction before trenching and driving ground rods for underground grid.

C. Verify exact location of stub-up points for grounding of equipment, fences and building or steel structures.

D. Copper and copper alloy connections should be cleaned prior to connection.

8.4.8 Installation

8.4.8.1 General

1. Bonding conductors shall be routed with minimum bends or changes in direction and should be made directly to the points being bonded.

2. Bonding connections should be made by using:
   a. Compression copper lugs. Use listed hardware that has been laboratory tested to eliminate most field problems.
   b. Exothermic welding (see NEC Article 250) within the ground electrode system, for parts of a grounding system that are subject to corrosion or that must carry high currents reliably, or for locations that require minimum maintenance.

3. Drive rods vertically, leaving top 18 inches exposed above finished grade. Exothermic-weld below-grade grounding connections, except at ground rods. Install additional ground rods as required to pass resistance test.

4. Make connections to dry surfaces only. Remove paint, rust, oxides, scales, grease and dirt from surfaces before making connection. Sand clean a one square inch area, drill, tap, and bolt conductor and connector to sanded area. Ensure proper conductivity.

5. The No. 3/0 AWG insulated ground wire weld ends shall have a minimum amount of wire exposure from the conduit to each weld and a minimum amount of insulation removed at weld.

6. The No. 6 AWG insulated ground wire connecting ends shall have a minimum amount of insulation removed at ground lug.

7. Do not connect ground wire in power cable assemblies to the communications ground system.

8.4.8.2 TMGB

1. Install the TMGB in the MDF as shown in the communications drawing set. The TMGB should be located so that the bonding conductor is as short and straight as possible. Maintain clearances required by applicable electrical codes.

2. The TMGB shall be attached to the wall studs with tapping screws with the bottom of the busbar 84 inches above finished floor (AFF).

3. The TMGB shall be offset from the wall two inches and shall include support brackets and insulators.

4. Connect the TMGB to the main building electrical entrance facility ground system and telecommunications primary protectors.

5. TMGB Weld Requirements

a. The No. 3/0 AWG ground wire weld from the main source shall not exceed one inch from one end of the TMGB busbar.

b. One additional weld shall not exceed one inch from the opposite end of the TMGB busbar.

c. Two or more additional welds shall not exceed the one-inch spacing from the welds toward the center of the busbar.

d. The No. 3/0 AWG insulated ground wire weld ends shall have a minimum amount of wire exposure from the conduit to the weld and a minimum amount of insulation removed at weld.

8.4.8.3 TGB

1. Install the TGBs in the IDFs. The TGB should also be located so that the bonding conductor is as short and straight as possible. Maintain clearances required by applicable electrical codes.

2. The TGB shall be attached to the wall studs with tapping screws with the bottom of the busbar 84 inches above finished floor (AFF).

3. The TGB shall be offset from the wall two inches and shall include support brackets and insulators.

4. TGB Weld Requirements

a. The No. 3/0 AWG ground wire weld from the TMGB shall not exceed one inch from one end of the TGB busbar.

b. One additional weld shall not exceed one inch from the opposite end of the TGB busbar.

c. Two or more additional welds shall not exceed the one-inch spacing from the end welds toward the center of the busbar.
d. The No. 3/0 AWG insulated ground wire weld ends shall have a minimum amount of wire exposure from the conduit to the weld and a minimum amount of insulation removed at weld.

8.4.8.4 Equipment Cabinets and Racks

1. The busbar shall be installed at the base and back of each cabinet and rack.

2. Each cabinet and rack shall be provided with a No. 6 AWG insulated ground wire home run to the TGB, except as noted:
a. In a cabinet or rack bay, provide a home run ground wire to the first cabinet or rack from the wall.
b. From the first cabinet or rack, the No. 6 AWG insulated ground wire may be looped from cabinet frame to cabinet frame (or rack to rack, where applicable), connecting to each cabinet frame (or rack) ground busbar, not to exceed four adjacent cabinets (or racks).
c. Do not loop from rack to cabinet.

3. Each cabinet or rack bay against the wall shall be bottom/side ground feeds from the wall.
a. Wall ground feeds/raceways to racks shall not be exposed on the walls.
b. Exception: Some cabinet or rack bays will require the ground to be fed from the ceiling raceway. Refer to drawings for details.

4. All ground raceways within each cabinet (or on each rack, where applicable) or cabinet base and adjacent ganged cabinet base shall be an insulated metallic flex type raceway and shall not interfere with equipment mounting framing or equipment mounting brackets.

5. Each ground feed shall provide proper installation allowances and penetration depths to provide conversion fittings from solid metallic to insulated metallic flex conduit raceways.

6. To bond each cabinet and rack to ground, sand clean a one square inch area, drill, tap, and bolt conductor and connector to sanded area.

8.4.8.5 Cable Tray/Runway, Cable Raceway and Support Systems Grounding:

1. Provide communications cable tray and cable runway systems with a communications isolated ground from the nearest TGB.

2. Provide and install No. 6 AWG insulated ground wire to one end of each cable tray/runway system and home run to nearest TGB.

3. Communications cable tray/runway that is located in the same room as the TMGB shall be connected to the TMGB.

4. Provide grounding path between cable tray/runway sections with grounding strap, Cooper B-Line part number SB-669-1 or submitted and owner-approved equivalent.

5. For electrically non-continuous conduits which contain only a grounding conductor, bond the conduit and conductor together at both ends to ground.

6. Bond conduit ends to nearest TGB with grounding bushings or ground clamps.

8.4.8.6 Shielded Backbone Cable

Terminate and bond shield to the nearest TGB or TMGB at both ends, following manufacturer's guidelines.

8.4.8.7 Unshielded Backbone Cable

1. Route a No. 6 AWG copper ground wire along each backbone cable route.

2. Bond each end at the nearest TGB or TMGB in the area that the associated cables are terminated.

8.4.8.8 Other

Provide and install No. 6 AWG green insulated stranded copper ground wire home run to nearest TGB from each of the following:

1. All conductive ducts.

2. All communications conductive equipment.

3. All communications conductive hardware.

8.4.8.9 Install permanent warning labels adjacent to each TMGB and TGB.

1. Install label as close as possible to busbar.

2. Label shall contain following information:

8.5 Installing Cable Support Systems

8.5.1 General

Cable support systems typically installed for telecommunications include the following:

• Cable trays and associated hardware
• Ladder racks and associated hardware
• Enclosed cable pathways and associated hardware
• Plywood backboards, straps, distribution-rings, hangers, fasteners, and J-hooks
• Conduits and associated hardware

Support systems provide a pathway for the cable, thus minimizing stress that could cause damage to the copper pairs or glass strands inside a cable sheath. The following installation steps are general in nature and additional steps may be required, depending on the size, quantity, and load rating of the individual supporting structures.

Since these support systems are used to support both backbone cables and horizontal cables, they are found in most areas of the buildings. It may be the case that other utilities (i.e., HVAC, plumbing, electrical) or structural obstructions will require that the cable support system change elevation and direction. Careful planning is important to minimize changes in direction which can be costly from a material as well as labor perspective.

8.5.1.1 Steps—Install Cable Support Systems

1) Obtain blueprint/specifications/designer's documents.
Determine the size, type, and quantity of pathways to be installed.
Determine the proposed route of the pathways between rooms and from rooms to work areas.
Identify any obstructions along the proposed route and determine how to overcome them.
If it is necessary to pass through any walls, be prepared to make the required penetration—concrete, concrete block, drywall, or other wall construction.
When installing cables in a suspended ceiling without permanent pathways, avoid cable paths that introduce obstacles.
Identify the plan to support cable in suspended ceilings and what type of hardware will be installed.

2) Verify load capacity of the cable support system. Verify by:
Reviewing the telecommunications designer's documents.
Determining the weight of individual types and sizes of cable to be installed.
Identifying the building structure to ensure the attachment of the support system is designed for that structure.

3) Verify the load capacity of existing cable support structures.
Where existing supports are to be used, visually examine them to determine if they are firmly attached, not worn or broken, and are capable of bearing the extra weight.

4) Verify cable support installation accessibility. Examine the following:
Area where the building beams and other structural elements are located.
Area where the concrete floor slab above is accessible and usable for installing anchors or other cable supports directly to them.
Paths in all directions from the point of observation to confirm if the pathway is clear for cable supports.

5) Metallic cable separation.
Maintain specified distances from possible sources of EMI exceeding 5 kVA *(see Table 2)*.
For safety purposes, keep power cables physically separated from telecommunications cables.
For branch circuits of 5 kVA or less no additional separation should be necessary.

NOTE–Optical fiber is immune to the effects of EMI.

Table 2. Minimum separation distances from possible sources of EMI exceeding 5 kVa

Condition	Minimum Separation Distance
Unshielded power lines of electrical equipment in proximity to open or nonmetal pathways.	610 mm (24 inches)
Unshielded power lines or electrical equipment in proximity to a grounded metal conduit pathway	300 mm (12 inches)
Power lines enclosed in a grounded metal conduit (or equivalent shielding) in proximity to a grounded metal conduit pathway	150 mm (6 inches)
Electrical motors and transformers	1200 mm (47 inches)

6) Verify material and tool availability.
Before beginning the installation of a cable support system, be sure that the required materials, hand tools, and power tools are available. This should also include safety tools such as safety glasses and, where required, hardhats.

7) Mount distribution-rings.
Review the designer's drawing and specifications to determine exact placement, quantity, size, and type of distribution-rings.
Install the distribution-rings, working from the top left side of the plywood backboard to the bottom right side of the plywood backboard.

Measure the location of the first distribution ring to be installed according to the designer's documents.
Position the distribution-ring on the backboard and install the screws to secure the distribution ring.

8) Installing J-hooks.
Determine the J-hook size required in each cable path and lay them out along the cable route, an average of 5 ft apart.
Identify the location of the first J hook to be installed.
Position the J-hook at its designated location and mark the holes for the anchors.
Pre-drill the holes and install the anchors. Depending on the type of structure, (i.e., a masonry structure will require one type of anchor while metal structures or drywall will require others).
Install the anchors.
Reposition the J-hook at the anchor(s).
Install the screw(s) through the hole(s) in the J-hook and into the anchor, securing the J-hook to the anchor(s).
Install the remaining J-hooks using the same procedures.

9) Install cable tray systems.
The process of installing a cable tray or trays is manufacturer specific, due to the many different sizes, types, and configurations. Consult the manufacturer's specifications and installation guidelines prior to installing these pathways.

Trays can be installed parallel to and against a wall or can be suspended from the building structure using ATR. They can also be supported using channel stock or manufacturer specific supports.

10) Install conduits.
See subclause 2.2.4.2, subclause 2.2.4.3 and TIA 569-B for maximum length of conduit and bends between pull points and pull box sizing.
All metal conduits installed for the placement of telecommunications cable will be bonded to the equipment grounding system.
All conduits shall have a pull string installed.

11) Conduit hangers.
Conduits are suspended from the building structure using a variety of hangers. These hangers are available in many sizes and types depending on the type of conduit and method used to install the hangers. Refer to the manufacturer's specifications for use of the type and size for the conduit hanger to be installed.

12) Installing wireway.
Wireways are different from cable trays in that they are completely enclosed pathways. They usually feature a hinged cover or one which snaps in place. They are available in a number of sizes and shapes, depending on the manufacturer. As with cable trays, the installation methodology is directly related to the manufacturer's guidelines. All metallic wireways installed for the placement of telecommunications cable shall be bonded to the equipment grounding system.

13) Pathway documentation.
The pathway shall be identified on the construction drawings and physically marked with a label that identifies it and states its origin and terminus. (See ANSI/TIA 606-A.)

14) General housekeeping.
It is important to clean up after a work operation when installing pathways. In general, equipment of sufficient size is required to install pathways and the materials are bulkier – thereby taking up space in the hallways and passageways of the building. This causes congestion and, if left in place, can impact the work efforts of others.
Hangers, their associated hardware, anchors, screws, and other materials can present a safety hazard to workers and should be stored during work operations and upon completion of the day's activities. If a work area cannot be cleaned, safety cones and barricades should be placed to prevent accidental intrusion into the work area by others until the work is complete and the area is cleaned.

9. Pulling Cable

9.1 General

Backbone cable is typically a high pair count copper cable (25- to 2400-pair), or high strand count optical fiber cable. Horizontal cable is typically 4-pair balanced twisted-pair with a performance level of category 3, 5e, or 6, or 2- to 6-strand optical fiber. For indoor optical fiber cable, the preferred color-coding scheme and written nomenclature for premises cable jackets are specified in ANSI/TIA 598-C *(see Table 3)*. An example of the nomenclature used is that of a 12-fiber cable containing eight 50/125 µm and four 62.5/125 µm fibers. The nomenclature for such a cable may include "12 Fiber — 8 x 50/125, 4 x 62.5/125" in the jacket print statement. For ultraviolet (UV) stabilized indoor/outdoor cable, the preferred color is black. The City Of San Antonio standard for multimode optical fiber cable is 62.5/125 µm or unless otherwise identified by the City..

When cable is received at the job site, the cable length should be verified to ensure the cable will reach between the end points. Inspect both ends of the cable to verify the footage markings on the outer jacket and compute the actual length of the jacket. The cable shall be identified, labeled, and the as built updated to reflect the work operation. As built plans shall be provided to the owner as a permanent record.

Table 3. Preferred color coding scheme for premises cable jackets (ANSI/TIA 598-C)

Fiber Type	Non-Military Applications	Military Applications	Suggested Print Nomenclature
Multimode (50/125)	Orange	Orange	50/125
Multimode (50/125) (850 nm laser optimized	Aqua		850 LO 50/125
Multimode (62.5/125)	Orange	Slate	62.5/125
Multimode (100/140)	Orange	Green	100/140
Single-mode	Yellow	Yellow	SM/NZDS SM
Polarization Maintaining Single-mode	Blue		Undefined

9.2 Cable Pulling Setup

9.2.1 Overview

A good cable pulling setup means all materials are in place so the cables can be handled properly and safely. A cabling contractor may need specialized equipment capable of holding large reels. Smaller equipment, such as cable trees, may be used to handle the many reels of cable containing low pair count cable.

The pathway of a cable shall be free of sharp bends and turns. The manufacturer's recommended pulling tension and minimum bend radius (while under tension) shall not be exceeded. The use of cable lubricants can significantly reduce friction and speed cable

installation (e.g., within a conduit). A lubricant should be selected based on cable manufacturer's recommendations.

When large, high pair count copper cables are installed in conduits, the pulling of the cable places significant tension on the conduit. A winch is generally employed in this high pair count placing operation. Sometimes the winch is anchored to the building or attached directly to the conduit. This tension causes swinging and swaying of the conduit and its hangers. Excessive movement of the conduit can cause the hangers to loosen and possibly come free. If this happens, the conduit and its cable could fall to the floor resulting in damage to the cable, the building, or injury to individuals.

Communication with co-workers is essential in every cable pull. Each co-worker should be prepared to alert the person pulling the cable, to ensure the cable is traversing the route smoothly without twisting, kinking, or getting bound up.

9.2.2 Pulling Horizontal Cable in Conduit

9.2.2.1 Overview

Horizontal cable is installed between the telecommunications room and work area outlets. Cable shall not be bent or kinked. Should the cable be damaged during installation, do not attempt to repair it but replace the entire cable.

It is recommended that cables and their reels be labeled prior to pulling cable into place. It is easier to identify and label the cables before they are pulled through the conduit.

9.2.3 Pulling Horizontal Cable in Open Ceiling

The procedure for cable installation in open ceilings is different from that in conduits. Cables shall be supported by cable tray, conduits, or J-hooks.

9.2.4 Pulling Backbone in Vertical Pathway—From Top Down

It is generally easier to install cable from the top down rather than from the bottom up because gravity helps with the pull. When pulling cable from top down, a reel brake may be needed. A reel brake is a mechanical device used to stop or slow a freewheeling reel, thus keeping it from unreeling too fast due to gravity. Pulleys may be needed to handle the cable from the reel location to the point where it will be lowered to lower floors. In the room where the cable will enter the vertical pathway, a bullwheel may be required to ensure that the jacket is not damaged as it enters the pathway.

9.2.5 Pulling Backbone in Vertical Pathway—From Bottom Up

When pulling cable from bottom up, a winch may be needed. Cable sheaves may be necessary to handle the cable from the reel location to the point where it will be pulled up to upper floors. In the room where the cable will enter the vertical pathway, a bullwheel may be required to ensure that the jacket is not damaged as it enters the pathway. Installers should be located on each floor through which the cable will pass as well as the top floor where it will terminate.

These individuals shall be equipped with tools to perform critical tasks during the placing operation.

9.2.6 Pulling Backbone—Horizontal

Backbone cable is used to interconnect telecommunications rooms on the same floor.

Cable sheaves may be necessary to handle the cable from the reel location to the point where it will be pulled. In the room where the cable will enter the horizontal pathway, a bullwheel may be required to ensure that the jacket is not damaged as it enters the pathway.

9.2.7 Cable Pulling Precautions

To verify receipt of undamaged cable, while the cable is still on the reel, the installer should verify that there is continuity with the cable still on the reel. For copper cable, continuity can be verified by use of an ohm-meter.

For optical fiber cable, continuity can be verified by shining a light source into the fiber strands or using a power meter or optical time domain reflectometer (OTDR), prior to installation.

Innerduct may be placed inside conduit, through sleeves, or placed in cable trays to facilitate cable pulls, cable removal, and to relax pulling tension exerted on the cable.

10. Firestopping

10.1 General

A **firestop** is a passive fire protection system of various components used to seal openings and joints in fire-resistance rated wall and/or floor assemblies, based on fire testing and certification listings. Re-establishing the integrity of fire rated walls, floors, and ceilings is an essential part of a cabling installation.

Penetrations through fire-rated assemblies made during the installation and any holes created by the removal of existing penetrents shall be sealed to the original rating of the fire rated architectural structures and assemblies using manufacturer approved methods in accordance with local code requirements. See ANSI/TIA 569-B, Annex A for information regarding firestops.

The term firestop refers to the installation of "qualified/listed" firestop materials in holes made through fire-rated floors, walls, or ceilings for the penetration of pipes, cables, or other construction/building, service/utility items. Firestop products are used to restore the opening to the original fire-rated integrity. Most common requirements are for 1, 2, or 3 hours. In rare instances, a 4-6 hour rating will be provided.

There are two basic types of penetrations:

- Through penetration is a hole made in a fire-rated wall or floor to run pipes, cables, or any type of building service, completely through from one side of the fire barrier to the other side.
- Membrane penetration is a hole in one side of a fire-rated wall or floor for a single surface-barrier penetration. (i.e., an electrical outlet/switch box).

Therefore, the installer:

- Cannot substitute products that are not part of the qualified assembly.
- Cannot add more of a product to get a higher rating.
- Can be held personally responsible for improperly firestopping or not firestopping.
- Can contact the manufacturers to get written assistance for situations not covered in their installation practices for qualified assemblies.
- Shall follow manufacturer requirements for conduit fill ratios.

There are ten basic types of firestop products:

- Mechanical systems
- Mortar/compounds
- Composite sheets
- Collar/devices
- Blankets
- Caulks/sealants

• Putty
• Wrap strips
• Pillows/bags
• Sprays

Mechanical systems consist of manufactured elastomeric components pre-sized and shaped to fit around standard cables, tubes, and conduits. These products are made of several substances which resemble rubber and are flexible. These systems use mechanical pressure to hold the elastomeric components in place and to provide a tight seal around the penetrating devices. Whether or not frames are included, some means of applying compression to the modules is required.

Non-mechanical firestop systems are generally pliable. These include products such as putties, caulks, blankets, silicone foam, pillows, and other types of materials that can be molded to fit into an opening to seal it.

When firestopping conduits, fill ratios provided by the manufacturer shall not be exceeded. Failure to comply with these requirements will prevent the application of the proper amount of firestop being installed around the penetrating cables and not allow the intumescent properties of the firestop material to be realized. This will lead to failure of the firestop.

10.2 Typical Installations

10.2.1 Sealing a Floor Penetration With Putty

The following describes an example of installing a putty seal from one side of a floor penetration.

1) Tear off a small portion of the putty.

NOTE: Use a drop cloth or other cover to protect the floor surface from the putty and insulation material.

2) Use the putty to build a bottom in the penetration, according to the manufacturer's instructions.

3) Fill the penetration with ceramic fiber or rock wool fill, stopping far enough from the upper rim to allow for a top layer of putty at the manufacturer's recommended thickness.

4) Use the putty to build a top on the penetration, according to the manufacturer's instructions

10.2.2 Sealing an Outlet Box With Putty

To seal an outlet box, follow the steps below.

1) Press a pad of putty into place, covering one side of the outlet box. Ensure that the pad overlaps at the top, bottom, and sides

2) Press a second pad of putty, if needed, into place on the other side of the box

3) Press the seams together to join the two pads.

10.2.3 Steps—Restore Penetrations (general)

1) Firestop conduits, pipes, and innerducts in brick, concrete block, or concrete wall.

The requirements for firestopping are variable and are directly dependent upon:

• Fire-barrier construction
• Material passing through the firewall
• Hourly rating required
• Opening size
• Installing the materials according to manufacturer tested methods

2) Firestop floor penetrations.

Sealing of cored or sleeved openings in floor slabs containing pipes, cables, or innerducts requires knowledge of floor thickness, floor construction, hourly fire rating required, opening size, annular space, sleeves, and materials selection.

3) Firestopping drywall.

• Requirements for firestopping are variable and are directly dependent upon hourly rating, opening size, annular space, sleeves, along with type and number of penetrants.
• Drywall penetrations are typically required to have firestopping installed symmetrically on both sides of the wall to restore fire rating.

4) Firestopping all applicable penetrations.

• Inspect all cable runs for any openings made through fire-rated walls as part of structured cabling system.
• If sleeves have been used, be sure to firestop the wall penetrations on both sides and each end of the sleeve itself.

5) Firestop cable tray.

Penetration by a cable tray in a firewall is only permitted by The City of San Antonio with prior approval. Generally the tray is placed against each side of the firewall and a number of appropriately sized sleeves are installed for cables to pass through.

If a cable tray penetrates directly through firewalls, specific manufactured seal systems should be obtained.

11. Cable Terminations

11.1 General

Cable termination involves the organizing of cables by destination, forming and dressing cables, labeling, and creating a connection with a copper or fiber conductor.

11.2 Pre-Termination Functions

Cable termination preparation not only improves the quality of the job but also decreases the amount of time required for termination.

The performance of pre-termination functions involves organizing the cable by destination. Cable to be terminated should be placed at the point of termination and shall be identified to ensure it is terminated in the designated position. Cable connection is not complete until all terminations are identified and labeled.

Alien crosstalk is associated with copper balanced twisted-pair cabling and an issue of which the installer must be aware. This issue can be mitigated by allowing cables to have a more natural lay rather than forming tight bundles and allowing cables to be run next-and-parallel to each other. While forming and dressing the cable at the point of termination may be visually pleasing, doing so for longer distances, such as within a cable tray, may lead to alien crosstalk performance issues. Separation of balanced UTP cables should follow the guidance of ANSI/TIA 568-B.1-10 and TIA/TSB 155.

11.3 Copper IDC Termination

11.3.1 General

Copper terminations are used for balanced twisted pair cabling and the use of insulation displacement contact (IDC) is recommended. When terminating balanced twisted-pair copper cable:

• Remove only as much cable jacket as is required for termination and trimming.
• Follow the manufacturer's instructions for mounting, termination, and cable management.
• Minimize the amount of untwisting in a pair as a result of termination to connecting hardware. For untwisting cabling, maintain pair twists as close as possible to the termination point. The amount of untwisting will not exceed:
• 1 inch for category 3 cables.
• 0.5 inch for category 5e and higher cables.

NOTE–This requirement is intended to minimize untwisting of cable pairs and the separation of conductors within a pair. It is not intended as a twist specification for cable of jumper construction.

The T568A and the optional T568B wiring schemes are recognized for use with horizontal copper cable. Only one of the wiring schemes will be used in a project.

11.3.2 Steps—IDC Termination

1) Using a sheath removal tool, remove the cable sheath in accordance with the termination equipment manufacturer's specifications.

2) Binder groups are found in 50 pair cables and above. Separate and identify binder groups. See Table 4.

3) Limit the untwisting of cable pairs to the minimum length required to make the termination. The untwist of cable pairs shall not exceed 0.5 inch.

4) Terminate cable according to connecting hardware manufacturer's recommendations.

Table 4. Color-code chart up to 600 pair

Pair Number	Tip	Ring	Binder Group	Pair Count
1	White	Blue	White-blue	001-025
2	White	Orange	White-orange	026-050
3	White	Green	White-green	051-075
4	White	Brown	White-brown	076-100
5	White	Slate	White-slate	101-125
6	Red	Blue	Red-blue	126-150
7	Red	Orange	Orange-red	151-175
8	Red	Green	Red-green	176-200
9	Red	Brown	Red-brown	201-225
10	Red	Slate	Red-slate	226-250
11	Black	Blue	Black-blue	251-275
12	Black	Orange	Black-orange	276-300
13	Black	Green	Black-green	301-325
14	Black	Brown	Black-brown	326-350
15	Black	Slate	Black-slate	351-375
16	Yellow	Blue	Yellow-blue	376-400
17	Yellow	Orange	Yellow-orange	401-425
18	Yellow	Green	Yellow-green	426-450
19	Yellow	Brown	Yellow-brown	451-475
20	Yellow	Slate	Yellow-slate	476-500
21	Violet	Blue	Violet-blue	501-525
22	Violet	Orange	Violet-orange	526-550
23	Violet	Green	Violet-green	551-575
24	Violet	Brown	Violet-brown	576-600
25	Violet	Slate		

11.4 Fiber Termination

In telecommunications, there are two specific types of optical fiber used: multimode and single-mode. Each specific type of fiber has its own characteristics. Multimode optical fiber has an outside diameter of 125 µm. The glass core of the fiber, which carries the optical signal, has a diameter of 50 µm or 62.5 µm. Single mode optical fiber has an outside diameter of 125 µm. The glass core of the fiber, which carries the optical signal, has a diameter of 8-9 µm. The optical fibers within cables are color coded as shown in Table 5. The City Of San Antonio standard for multimode optical fiber cable is 62.5/125 µm or unless otherwise identified by the City..

Optical fiber cores shall be precisely aligned between connecting cables to ensure that the maximum transfer of light energy is obtained. Termination procedures for optical connectors in the field vary by manufacturer. Listed below are some of the various methods:

• Heat-cured termination: A fiber connector termination method requiring field polishing using an adhesive that requires heat for curing.
• Crimp termination: A fiber connector termination method requiring field polishing using a mechanical means to secure the fiber.
• Anaerobic termination: A fiber connector termination method requiring field polishing using an adhesive and catalyst that cures very quickly.
• Pre-polished connectors: A fiber connector termination method using mechanical means to hold the fiber against a preinstalled and factory polished fiber sub in the ferrule of the connector.

The City Of San Antonio standard for optical fiber termination is fusion spliced cable assemblies (pigtails). See section 8.6.

Warning:
1) Care should be used when handling fibers so as not to break them, or to handle them in such a way that they could penetrate your skin. Safely dispose of fiber shards per the City's practice.
2) **Never look into the ends of an optical fiber as the transmitted light may be invisible and cause eye damage**.

Table 5. Optical fiber color code chart (ANSI/TIA-598-C)

Fiber No.	Color	Fiber No.	Color	Fiber No.	Color
1	Blue	13	Blue/Black Tracer	25	Blue/Double Black Tracer
2	Orange	14	Orange/Black Tracer	26	Orange/Double Black Tracer
3	Green	15	Green/Black Tracer	27	Green/Double Black Tracer
4	Brown	16	Brown/Black Tracer	28	Brown/Double Black Tracer
5	Slate	17	Slate/Black Tracer	29	Slate/Double Black Tracer
6	White	18	White/Black Tracer	30	White/Double Black Tracer
7	Red	19	Red/Black Tracer	31	Red/Double Black Tracer
8	Black	20	Black/Yellow Tracer	32	Black/Double Yellow Tracer
9	Yellow	21	Yellow/Black Tracer	33	Yellow/Double Black Tracer
10	Violet	22	Violet/ Black Tracer	34	Violet/Double Black Tracer
11	Rose	23	Rose/Black Tracer	35	Rose/Double Black Tracer

12	Aqua	24	Aqua/Black Tracer	36	Aqua/Double Black Tracer

11.5 Copper Cable Splicing

Copper cable splicing is allowed only in backbone cable—never for horizontal cable which extends between the telecommunications room and the work area.

Two common modular (groups of pairs) splicing techniques are in-line and foldback. Foldback splicing is the preferred method, where practicable.

With the in-line splicing method, wire is placed in a straight-across arrangement and provides for little wire slack. The in-line method is not designed to be rearranged and should receive minimum handling.

The foldback splicing method allows the conductors to be folded into the splice which in turn provides for maintenance, rearrangement, and transfer of the conductors. The foldback method typically requires more cable be stored within the splice and could increase the size of the needed splice closure.

The splice connecting hardware shall be selected by the designer to meet the application requirements. Follow the equipment manufacturer's installation guidelines.

The installer should pay particular attention to:

• Check cable shield for presence of unsafe voltages.
• Bond cable shields across the splice before splicing.
• Bond cable shields to ground.

11.6 Optical Fiber Cable Splicing

There are two major categories of field-splicing methods for optical fibers—fusion and mechanical. Both single-fiber and multiple-fiber (typically 6- or 12-fibers) splicing methods are available.

Only fibers with the same core and cladding dimensions and similar performance characteristics (bandwidth) shall be spliced (e.g., 50 µm core to 50 µm core; 2000 MHz/km to 2000 MHz/km).

The splice hardware shall be selected by the designer to meet the application requirements. Follow the equipment manufacturer's installation guidelines.

12. Installation Verification

Installation conformance is performed through a systematic method that ensures the installation has been completed in accordance with industry standards and the terms and conditions of the installation contract. Visual inspection and documentation are required for proof of proper installation conformance (See ANSI/TIA 606-A for administrative requirements such as labeling).

Performance test documentation of the installed cabling shall be provided to the City Of San Antonio per contract requirements, or, in lieu of contract requirements, in the format delivered by the certification test instrument and Adobe PDF format. Certification of the cabling in the City buildings determines whether the cabling meets expected ANSI/TIA 568-B Series performance (e.g., category 5e, category 6).

Field testing of installed cabling shall be performed in accordance with Appendix A.

13. Safety And Cautions For Fiber Optic Installation

13.1 Fiber Optic Installation Safety

13.1.1 General

Safety in fiber optic installations includes avoiding exposure to invisible light radiation carried in the fiber; proper disposal of fiber scraps produced in cable handling and termination; and safe handling hazardous chemicals used in termination, splicing or cleaning.

The following are examples of safety precautions that should be followed during fiber optic cable installations. This is not a comprehensive list of OSHA regulations governing fiber optic installations.

13.1.2 Eye Protection

a) Always wear safety glasses with side shields. Always ensure that safety eyewear complies with relevant requirements including OSHA.

b) After handling fiber, wash hands thoroughly before touching eyes or contact lenses.

c) Never look directly into the end of any optical fiber unless it is certain that no light is present in the fiber. The light used for signal transmission in fiber optics is generally invisible to the human eye but may operate at power levels that can be harmful to the eye. Inspection microscopes can concentrate the light in the fiber and increase the danger. Use an optical power meter to verify that no light is present in the fiber.

d) When using an optical tracer or continuity checker, look at the fiber from an angle at least 12 inches away from the eye to determine if the visible light is present.

13.1.3 Protection From Fiber Scraps

Small scraps of bare fiber produced as part of the termination and splicing process shall be disposed of properly in a safe container and marked according to local regulations, as it may be considered hazardous waste.

a) Do not drop fiber scraps on the floor where they will stick in carpets or shoes and be carried elsewhere. Place them in a marked container or stick them to double-sided adhesive tape on the work surface.

b) Thoroughly clean the work area when finished. Do not use compressed air to clean off the work area. Sweep all scraps into a disposal container.

c) Do not eat, drink or smoke near the working area. Fiber particles can be harmful if ingested.

d) Wash hands well after working with fibers.

e) Carefully inspect clothing for fiber scraps when finished working with fiber.

13.1.4 Other Safety Issues

a) Work only in well-ventilated areas. Confined spaces, such as equipment vaults, manholes can contain toxic or explosive gases or insufficient air to sustain life.

b) Materials and chemicals used in installation processes may be hazardous. Request Material Safety Data Sheets (MSDS) on all chemicals used.

c) Fusion splicers create an electric arc. Ensure that no flammable vapors and/or liquids are present. Do not use in confined spaces as defined by OSHA.

13.2 Cleanliness

The small size of optical fibers makes them very sensitive to dust and dirt. Maintain the highest standards of cleanliness when working with fiber to optimize its performance.

13.2.1 Guidelines For Cleanliness

a) Try to work in clean areas.

b) Always keep protective dust caps on connectors, mating adapters, patch panels, or test and network equipment.

c) Do not touch the ends of the connectors.

d) Use lint-free wipes and pure reagent grade isopropyl alcohol to clean connectors. Other solvents can attack adhesives or leave a residue. Cotton swabs or pads may leave threads behind and are not recommended.

e) "Canned air" can be used to blow dust out of mating adapters or equipment inputs/outputs.

f) Test equipment fiber inputs/outputs and test cables should be cleaned periodically.

14. Fiber Optic Installation Requirements

14.1 General Guidelines

14.1.1 Receiving Fiber Optic Cabling and Equipment on Site

Fiber optic equipment and components are subject to damage by improper handling and shall be handled accordingly.

When initially received on the job site all fiber optic components should be carefully inspected for damage and tested for continuity or loss if damage is suspected.

Ensure that all components and parts have been received, match quantities ordered (e.g., fiber optic cable contains the number and type of fiber ordered and is the length ordered), and that any discrepancies or damaged goods are noted and replaced as required.

All equipment and cabling shall be stored in a clean and dry location, protected from harsh environments and extremes of cold and heat.

14.1.2 Handling Fiber Optic Cables

Handle reels of fiber optic cable with care. All reels, regardless of size or length, shall have both ends of the cable available for the testing. A fiber tracer or visual fault locator and bare fiber adapters can be used for continuity testing.

Move small, lightweight spools of fiber optic cable by hand. Move larger reels with appropriate lifting equipment or using two or more installers skilled in the moving operation.

Lifting equipment shall only be reels with a matched set of slings or chokers, attached to an appropriately sized piece of pipe inserted into the hole in the center of the reel. Slings and chokers shall never be attached around the spooled area of the reel. The cable reels shall be moved carefully to avoid damage to the cable.

14.2 Support Structures

Install support structures for fiber optic cable installations before the installation of the fiber optic cable itself. These structures should follow the guidelines of TIA/EIA 569-A and NECA/BICSI 568-2001.

Allow for future growth in the quantity and size of cables when determining the size of the pathway bend radius requirements.

Do not install a fiber optic cable in a conduit or duct that already contains cabling, regardless of the cable type. Existing or new empty ductwork can be modified to accept several different installations by placing innerduct within it.

14.3 Removal of Abandoned Cables

Unless directed by the City that unused cables are reserved for future use, remove abandoned optical fiber cable (cable that is not terminated at equipment other than a connector and not identified for future use with a tag) as required by the National Electrical Code.

14.4 Fire Stopping

14.4.1 General

All telecommunications firestopping shall comply with applicable codes and standards, including TIA/EIA 569-A- Annex A and NECA/BICSI 568-2001.

All penetrations shall be protected by approved firestops. Fire stopping compounds and devices shall be used whenever a fire separation has been breached by an installation.

In most geographical locals the breaching of a fire separation will require physical monitoring until it has been repaired.

Check with the City Of San Antonio for specific requirements on the project before commencing work.

14.5 Grounding and Bonding

14.5.1 General

Ground systems shall be designed as specified by the NEC and other applicable codes and standards (ANSII/TIA/EIA 607-A, NECA/BICSI-568-2001).

Although most fiber optic cables are not conductive, any metallic hardware used in fiber optic cabling systems (such as wall-mounted termination boxes, racks, and patch panels) shall be grounded.

Conductive cables require proper grounding and bonding for applicable conductors.

15. Fiber Optic Cables

15.1 Cable Types

Fiber optic cables are available in many types, for different applications. Premises cables are usually tight buffer designs that include jackets rated for flammability. OSP cables are generally loose tube designs with water blocking and may also have an armored jacket.

Some cables are usable for either OSP or premises applications. These include dry-water blocked tight buffered cables that can be used for short outdoor runs and double jacketed asp cables that have a removable outside jacket and an inner jacket that is rated a flame retardant.

15.1.1 Cables by Fiber Types

Fiber optic cables may contain multimode fibers, singlemode fibers or a combination of the two, in which case it is referred to as a "hybrid" cable. The type of cable shall be positively identified and, if hybrid, the type of each fiber, since multimode and singlemode fiber are terminated in different manners. See Section 14 for more information on termination.

15.1.2 Fiber Optic Cables by Construction Type

a) Tight Buffered Cables

Tight buffered fiber optic cable contains fiber with a soft 900-micron diameter coating that protects the fiber and is color-coded for identification. Tight buffered fibers are cabled with strength members (usually aramid fibers) in simplex or zip cord cables for use as patch cords.

Multiple tight buffered fibers may be cabled with aramid fiber strength members and a central stiffener in a cable type called a distribution cable, often used for premises backbones, horizontal runs or general building cabling.

Several simplex cables can be bundled in a single cable called a breakout cable. Simplex, zipcord and breakout cables may be directly terminated for connection to a patch panel or network equipment as the cable provides adequate protection for the fibers.

Fibers in distribution cables are terminated directly, but the lack of protection for the fibers requires they be placed inside patch panels or wall-mounted boxes.

b) Loose Tube Cable

Loose tube (also called loose buffer) fiber optic cable consists of one or more protective tubes, each containing one or more fibers with only 250-micron primary coating over the fiber.

Loose-tube cable is primarily used for outside plant installations where low attenuation and high cable pulling strength are required.

Many fibers can be incorporated into the same tube, providing a small-size, high-fiber density construction. The tubes are usually filled with a gel, which prevents water from entering the cable. The fibers in loose tube cables are protected from the outside environment and can be installed with higher pulling tensions than tight-buffered cables.

Fiber in loose tube cables may be spliced directly and placed in appropriate protective enclosures. Fibers in loose tube cables which have only the 250 micron primary coating should be sleeved with a break out kit for protection before termination and placed in patch panels or wall-mounted boxes for protection.

15.2 Flammability - Cable Ratings and Markings

All premises cables shall be listed and have flammability ratings per NEC 770.50. Cables without markings should never be installed inside buildings, as they do not comply with the National Electrical Code. Optical cable markings are as follows:

OFN	optical fiber nonconductive
OFC	optical fiber conductive
OFNG or OFCG	general purpose
OFNR or OFCR	riser rated cable for vertical runs
OFNP or OFCP	plenum rated cables for use in air-handling plenums
OFN-LS	low smoke density

15.3 Fiber Optic Cable Color Codes

15.3.1 Cable Jackets

Colors of cable jackets for identifying indoor fiber optic cable are not standardized. Typical colors are as follows:

Premises cables:

Orange or gray	Multimode fiber
Yellow	Singlemode fiber

Outside plant cables:
These are typically black to prevent UV radiation damage.

Some military cables are color-coded for fiber type:

Orange	50/125 micron
Slate	62.5/125
Green	100/140

Some indoor cables are black or other colors. Refer to manufacturer's datasheets or cable jacket markings to determine the fibers in the cable.

15.3.2 Fiber Color Codes

Fiber color codes are specified by TIA/EIA 598-A. In loose tube cables, this color code shall be used for tubes as well as fibers within the tubes and subgroups.

Fiber No.	*Color*
1	Blue
2	Orange
3	Green
4	Brown
5	Slate
6	White
7	Red
8	Black
9	Yellow
10	Violet
11	Rose
12	Aqua

15.4 Installing Fiber Optic Cable

15.4.1 General

Fiber optic cable may be installed indoors or outdoors using several different installation processes. Outdoor cable may be direct buried, pulled or blown into conduit or innerduct, or installed aerially between poles. Indoor cables can be installed in raceways, cable trays, placed in hangers, pulled into conduit or innerduct or blown though special ducts with compressed gas. The installation process will depend on the nature of the installation and the type of cable being used.

Installation methods for both wire and optical fiber communications cables are similar. Fiber cable is designed to be pulled with much greater force than copper wire if pulled correctly, but excess stress may harm the fibers, potentially causing eventual failure.

15.4.2 Installation Guidelines

a) Follow the cable manufacturer's recommendations. Fiber optic cable is often custom-designed for the installation and the manufacturer may have specific instructions on its installation.

b) Check the cable length to make sure the cable being pulled is long enough for the run to prevent having to splice fiber and provide special protection for the splices.

c) Try to complete the installation in one pull. Prior to any installation, assess the route carefully to determine the methods of installation and obstacles likely to be encountered.

15.4.2.1 Pulling tension

a) Cable manufacturers install special strength members, usually aramid yarn, for pulling. Fiber optic cable should only be pulled by these strength members. Any other method may put stress on the fibers and harm them.

b) Swivel pulling eyes should be used to attach the pulling rope or tape to the cable to prevent cable twisting during the pull.

c) Cables should not be pulled by the jacket unless it is specifically approved by the cable manufacturers and an approved cable grip is used.

d) Tight buffer cable can be pulled by the jacket in premises applications if a large (~40 cm, 8 in.) spool is used as a pulling mandrel. Wrap the cable around the spool 5 times and hold gently when pulling.

e) Do not exceed the maximum pulling tension rating. Consult the cable manufacturer and suppliers of conduit, innerduct, and cable lubricants for guidelines on tension ratings and lubricant use.

f) On long runs (up to approximately 3 miles or 5 kilometers), use proper lubricants and make sure they are compatible with the cable jacket. If possible, use an automated puller with tension control and/or a breakaway pulling eye. On very long runs (farther than approximately 2.5 miles or 4 kilometers), pull from the middle out to both ends or use an automated fiber puller at intermediate point(s) for a continuous pull.

g) When laying loops of fiber on a surface during a pull, use "figure-8" loops to prevent twisting the cable.

15.4.2.2 Bend Radius

a) Do not exceed the cable bend radius. Fiber optic cable can be broken when kinked or bent too tightly, especially during pulling.

b) If no specific recommendations are available from the cable manufacturer, the cable should not be pulled over a bend radius smaller than twenty (20) times the cable diameter.

c) After completion of the pull, the cable should not have any bend radius smaller than ten (10) times the cable diameter.

15.4.2.3 Twisting Cable

a) Do not twist the cable. Twisting the cable can stress the fibers. Tension on the cable and pulling ropes can cause twisting.

b) Use a swivel pulling eye to connect the pull rope to the cable to prevent pulling tension causing twisting forces on the cable.

c) Roll the cable off the spool instead of spinning it off the spool end to prevent putting a twist in the cable for every turn on the spool.

d) When laying cable out for a long pull, use a "figure 8" on the ground to prevent twisting. The figure 8 puts a half twist in on one side of the 8 and takes it out on the other, preventing twists.

15.4.2.4 Vertical Cable Runs

a) Drop vertical cables down rather than pulling them up whenever possible.

b) Support cables at frequent intervals to prevent excess stress on the jacket. Support can be provided by cable ties (tightened snugly, not tightly enough to deform the cable jacket) or Kellems grips.

c) Use service loops to assist in gripping the cable for support and provide cable for future repairs or rerouting.

15.5 Cable Plant Hardware

All hardware and support structures should follow the recommendations of TIA/EIA 569 and NECA/BICSI 568-2001.

15.5.1 Cable Racks, Trays, Conduit and Innerduct

a) Outside plant cables can be installed in conduit or innerduct or direct buried, depending on the cable type.

b) Premises cabling can be installed in cable trays, ladder racks, I-hooks, or other appropriate support structures.

c) Building cables can be installed directly, but installing them inside plenum-rated innerduct provides extra protection for the fiber cable. Innerduct is bright orange and will provide a good way to identify fiber optic cable and protect it from damage.

15.5.2 Fiber Optic Splicing and Termination Hardware

a) Breakout kits: The fibers in loose tube cables have only the 250 micron primary buffer coating. Use breakout kits to separate and protect individual fibers in a loose tube cable for termination.

b) Splice enclosures: For long cable runs outside, splices are necessary to connect lengths of cable. Splices require protection that is provided by a sealed splice closure. Choose closures with adequate space for the number of fibers in the cables and port locations appropriate for the

final mounting. Splice closures can be sealed and buried in the ground, placed in a vault or suspended aerially.

c) Splice panels and patch panels: Terminate or splice distribution cables inside panels or boxes to protect the fibers from damage. Boxes or panels may be rack-or wall-mounted. All should have locks to prevent unauthorized entry.

d) Racks and cabinets: Enclosures for patch panels and splice panels are used to terminate and organize cables. Use appropriate cable management hardware on the racks to route and separate cables to minimize potential for damage and facilitate moves, adds and changes.

e) Take care with all splicing and termination hardware to maintain cable bend radiuses, prevent pinching or kinking of fibers and separate fibers to allow for future restoration, moves or other work.

15.6 Use Of Cable Ties

a) Fiber optic cables, like all communications cables, are sensitive to compressive or crushing loads. Cable ties used with many cables, especially when tightened with an installation tool, are harmful to fiber optic cables, causing attenuation and potential fiber breakage.

b) When used, cable ties should be hand tightened to be snug but loose enough to be moved along the cable by hand. Then the excess length of the tie should be cut off to prevent future tightening.

c) Hook-and-Loop fastener ties are preferred for fiber optic cables, as they cannot apply crush loads sufficient to harm the cable.

16. Fiber Optic Termination

16.1 General

Fiber optic termination processes vary according to the types of fiber being terminated, the style of connectors or splices used and the termination process appropriate for that connector. Fiber optic cable can be terminated in two ways, using:

- Connectors that mate two fibers to create a temporary joint and/or connect the optical fiber to network equipment.
- Splices which create a permanent joint between two fibers.

The decision whether to use connectors or splices depends on the application. All terminations must be of the right style, installed in a manner that provides low light loss and back reflection and protected against the expected environment, dirt or damage while in use.

16.2 Fiber Optic Connectors

16.2.1 Choice of Connector

Fiber optic connectors are manufactured in a number of different styles (e.g., ST, SC, LC, MT-RJ) that attach to the fibers in a fiber optic cable by a number of different methods (e.g., epoxy polish, prepolished/splice, etc.)

The connectors used in the cable plant being installed should:

1) Be compatible with the fiber optic cabling,

2) Be compatible with the equipment intended for use on the cabling

3) Provide adequate optical performance (loss and return loss)

4) Be compatible with the operating environment (temperature, humidity, etc.) of the installation and

5) Be compatible with like style connectors.

All fiber optic connectors used should have a reference FOCIS document (Fiber Optic Connector Intermateability Standard) published by TIA/EIA.

Fiber optic connectors may be field installed by direct attachment to the cable or by splicing preterminated pigtails onto the installed cable. Multimode connectors are generally installed

directly onto fibers in the field while singlemode cables are more likely to be terminated by splicing on preterminated pigtails.

16.2.2 Termination Types

Several different types of terminations are available for optical fibers. Follow the manufacturer's directions exactly for the termination process used to insure best connector performance and reliability.

a) Adhesive Terminations

Many connectors use epoxies or other adhesives to hold the fiber in the connector. Use only the specified epoxy, as the fiber-to-ferrule bond is critical for low loss and long term reliability.

1. *Epoxy/Polish:* The fiber is glued into the connector with two-part epoxy and the end polished with special polishing film. This method provides the most reliable connection and lowest losses. The epoxy can be allowed to set overnight or cured in a special oven. A "heat gun" should not be used to cure the epoxy as the uneven heat may not cure all the epoxy or may overheat it which will prevent curing.

2. *Hot Melt:* This connector is similar to the epoxy/polish connector but already has the adhesive (a heat set glue) inside the connector. The adhesive is liquefied in an oven before the fiber can be inserted. The fiber is secured when the adhesive cools.

3. *Anaerobic Adhesives:* These connectors use a quick-setting adhesive instead of the epoxy. They may use a single part adhesive or an adhesive and setting agent. Some adhesives do not have the wide temperature range of epoxies, so they should only be used indoors unless otherwise specified.

b) Crimp/Polish or Crimp/Cleave Terminations
These connectors use a crimp on the fiber to hold it in the connector ferrule. The fiber can be polished like an adhesive connector or cleaved with a special tool. Insure the crimp is made properly to prevent fiber pistoning (pulling back or pushing forward in the connector ferrule.)

c) Prepolished/Splice These connectors have a short stub of fiber already epoxied into the ferrule and polished. Termination requires cleaving a fiber, inserting it into the back of the connector like a splice and crimping. The loss of these connectors will generally be higher than adhesive connectors, since they include a connector loss plus a splice loss in every connector.

To achieve low loss, the fiber must be cleaved properly, which requires a good cleaver and good technique. Insure the crimp is made properly to prevent fiber pistoning (pulling back in the connector ferrule.) The termination process can be monitored with a visual fault locator.

16.2.3 Termination Process

Whichever process is used for termination, follow the manufacturer's instructions carefully. Use only adhesives approved by the manufacturer, and employ adhesive curing times in accordance with the manufacturer's instructions.

When special tools are required, use them in the appropriate manner.

Once installation is completed, connectors should be covered with an appropriate dust cap and stored in a safe location for testing or connection to network equipment.

16.2.4 Connector Performance

Connector performance shall be within industry standard limits as specified in TIA/EIA 568-B.3. Connector performance may be specified by the City at a different value, and if so, those values shall be used for acceptance.

16.2.5 Performance Verification

Following completed installation and termination, all terminated cables shall be tested. Section 15 provides more detail on testing requirements at the conclusion of installation.

Examine all connectors requiring polishing with a microscope for proper end finish, cracks, scratches or dirt per FOTP-57.

Test all fibers in all cables for loss using an OLTS power meter and source. Test multimode cables using TIA/EIA 526-14 Method B, and singlemode cables using TIA/EIA 526-7 (single mode). Total loss shall be less than the calculated maximum loss for the cable based on appropriate standards or customer specifications.

16.2.6 Fiber Polarization

In fiber networks, separate fibers are typically used for transmission in each direction, therefore it is necessary to identify the fiber connected to the transmitter and receiver at each end.

Duplex connectors such as the duplex SC or MT-RJ are polarized, that is they are keyed to allow connection in only one orientation. Follow the polarization rules given in TIA/EIA 568-B3, Section 12.2.4.

Simplex connectors should be documented for connections and when allocated to the transceiver of networking equipment, marked for transmit and receive at each end of the link.

16.3 Fiber Optic Splices

16.3.1 Types of Splices

Splices are a permanent joint or connection between two fibers. There are two basic types of splices, fusion and mechanical.

1. Fusion Splices: These "weld" the two fibers together usually in an electric arc. Fusion splicers are generally automated and produce splices that have minimal losses. Fusion splicing

should not be performed in a dusty or explosive atmosphere as the electric arc may cause an explosion or fire.

2. Mechanical Splices: These align two fibers in a ferrule or v-groove with index-matching gel or adhesive between the fibers to reduce loss and back reflection. Mechanical splices are used for temporary restoration as well as permanent joints.

16.3.2 Splice Performance

Splice performance shall be within industry standard limits as specified in TIA/ElA 568-B.3. If splice performance may be specified by end users at a different value, and if so, those values shall be used for acceptance.

16.3.3 Splice Performance Verification

End-to-end tests of fiber optic cable loss include the losses caused by splices. If the cable loss exceeds the calculated maximum value, or if the customer requires splice loss verification, test the cable with an OTDR to analyze the loss of individual components (fiber, connectors, and splices) in the cable. Test splice loss in both directions and average the measured values to reduce the directional effects of OTDR measurements.

17. Testing The Installed Fiber Optic Cable Plant

17.1 General

After installation, test each fiber in all fiber optic cables for verification of proper installation. Perform the following tests:

a) Continuity testing to determine that the fiber routing and/or polarization is correct and documentation is proper.

b) End-to-end insertion loss using an OLTS power meter and source. Test multimode cables using TIA/EIA 526-14 Method B, and singlemode cables using TIA/EIA 526-7 (single mode). Total loss shall be less than the calculated maximum loss for the cable based on appropriate standards or customer specifications.

c) Optional OTDR testing may be used to verify cable installation and splice performance. However, OTDR testing shall not be used to determine cable loss.

d) If the design documentation does not include cable plant length, and this is not recorded during installation, test the length of the fiber using the length feature available on an OTDR, or some OLTSs.

e) If testing shows variances from expected losses, troubleshoot the problems and correct them.

17.2 Continuity Testing

Perform continuity testing of optical fibers using a visual fiber tracer, visual fault locator, or OLTS power meter and source. Trace the fiber from end to end through any interconnections to insure that the path is properly installed, and that polarization and routing are correct and documented.

17.3 Insertion Loss

a) Insertion loss refers to the optical loss of the installed fibers when measured with a test source and power meter (OLTS). Test multimode cables using Teal 526-14 Method B, and singlemode cables using TIA/EIA 526-7 (single mode). See Appendix B.

b) Test multimode fiber at 850 and 1300 nm, and singlemode fiber at 1310 and 1550 nm, unless otherwise required by other standards or customer requirements.

c) Test reference test cables to verify quality and clean them often.

d) Cabling intended for use with high speed systems using laser sources may be tested with appropriate laser sources to ensure that tests verify performance with that type of source.

17.4 OTDR Testing

a) The optical time domain reflectometer (OTDR) uses optical radar-like techniques to create a picture of a fiber in an installed fiber optic cable. The picture, called a signature or trace, contains data on the length of the fiber, loss in fiber segments, connectors, splices and loss caused by stress during installation.

b) OTDRs are used to verify the quality of the installation or for troubleshooting. However, OTDR testing shall not be used to determine cable loss.

c) OTDR testing should only performed by trained personnel, using certified equipment designed for the purpose. The technicians performing the tests should be trained not only in operation of the OTDR equipment, but also in the interpretation of OTDR traces.

d) See Appendix A for more information on OTDR testing.

18. Administration, Management, And Documentation For Fiber Optics

18.1 Guidelines

a) Documentation of the fiber optic cable plant is an integral part of the design, installation and maintenance process for the fiber optic network. Documenting the installation properly will facilitate installation, allow better planning for upgrading, simplify testing and future moves, adds and changes.

b) Documentation of the fiber optic cable plant should follow ANSI/TIA/EIA-606, *Administration Standard for the Telecommunications Infrastructure of Commercial Buildings.*

c) Fiber optic cables, especially those used for backbone cables, may contain many fibers that connect a number of different links going to several different locations with interconnections at patch panels or splice closures. The fiber optic cable plant should be documented as to the exact path that every fiber in each cable follows, including intermediate connections and every connector type.

d) Documentation should also include insertion loss data and optional OTDR traces.

19. Labels And Labeling

19.1 Visibility and Durability

The size, color, and contrast of all labels should be selected to ensure that the identifiers are easily read. Labels should be visible during the installation of and normal maintenance of the infrastructure.

Labels should be resistant to the environmental conditions at the point of installation (such as moisture, heat, or ultraviolet light), and should have a design life equal to or greater than that of the labeled component.

19.2 Specifications

Adhesive labels that meet the legibility, defacement and adhesion requirements specified in UL 969 for indoor use shall be provided. Outside plant labels shall meet exposure requirements listed in UL 969 for indoor and outdoor use.

Labels shall have a durable vinyl substrate suitable for wrapping. Labels shall have a white printing area and a clear tail that self-laminates the printer area when wrapped around the cable. Tail shall be of sufficient length to wrap around cable at least one and one-half time.

19.3 Mechanical Generation

All labels shall be printed or generated by a mechanical device.

19.4 Approved Manufacturer's

Any manufacturer that meets the above criteria and specifications and is approved by the City/ITSD shall be considered acceptable unless specifically excluded.

19.5 Label scheme

the City labeling scheme shall be separated into two categories, Legacy and Hierarchical. The Legacy labeling scheme follows a sequential numbering that starts at one (1) and sequences through as many outlets as are installed in a facility. The Hierarchical labeling scheme will be implemented for all new installations where patch panels are being used.

19.5.1 Legacy scheme

The Legacy scheme will have as the first characters the the City building code. The building code is a series of alpha numeric characters that indicate the individual building. The second set of characters, separated by a hyphen, will be a series of digits that indicate the outlet number. The numbers will have three places with leading zeros as place holders for numbers less than three digits.

Example:

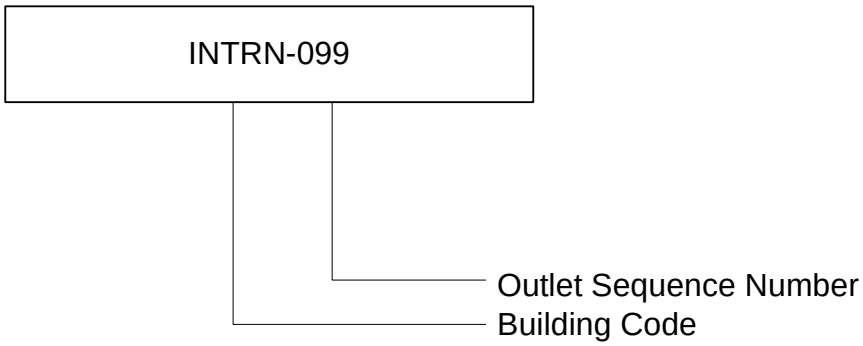

19.5.2 Hierarchical scheme

The Hierarchical scheme will have three series of characters. The first series is the the City building code. The building code is a series of alpha numeric characters that indicate the individual building. The second set of characters, separated by a hyphen, will be the floor number, followed by the room (MDF/IDF) number. The third series indicate the rack, patch panel, and patch panel port number.

Example:

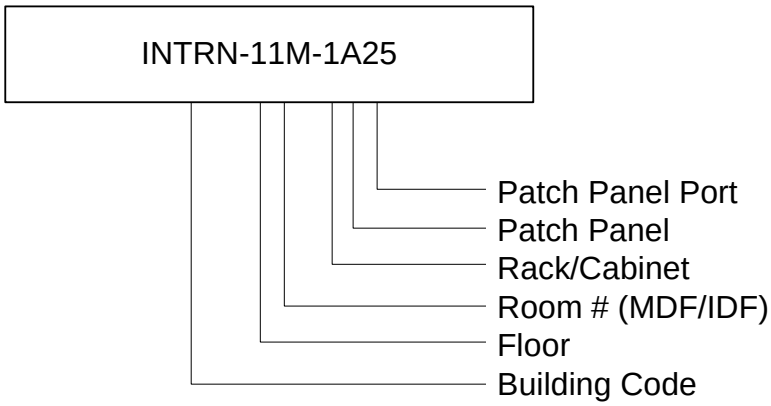

Appendix A: Field Test Requirements

A.1 General

Transmission performance depends on cable characteristics, connecting hardware, patch cords and cross connect wiring, the total number of connections, and the care with which they are installed and maintained.

Field test instruments shall be calibrated and maintained at intervals specified by the manufacturer.

A.2 100 Ohm Balanced UTP and ScTP Cabling

A.2.1 Test instruments

For field testing of the categories of cabling (e.g., categories 3, 5e and 6), test instruments shall meet or exceed the applicable requirements in ANSI/TIA 568-B.1 and
ANSI/TIA 568-B.2, including their addenda.

Commercially available certification test instruments specify their Level of performance attainment to ensure that the installed cabling meets the transmission characteristics found in ANSI/TIA 568-B.1 and ANSI/TIA 568-B.2, including their addenda. Fluke DTX 1800, Lantek 6, Wirescope 350 are examples.

A.2.2 Performance parameters

The field tests required for balanced twisted-pair cabling are specified in ANSI/TIA 568-B.1 and ANSI/TIA 568-B.2, including their addenda.

A.2.3 Permanent link test configuration

Installed cabling shall be certified in accordance with the permanent link test configuration unless specified to be tested as a channel.

A.2.4 Channel test configuration

When a channel is specified for testing, it shall be certified in accordance with the channel test configuration.

A.2.5 Backbone and other cabling test configuration

The wire map test for all pairs in backbone and other than horizontal cabling shall be performed and recorded for all segments. Wire map tests include:

• Continuity to the remote end
• Shorts between any two or more conductors
• Crossed pairs
• Reversed pairs
• Split pairs
• Any other miswiring

The length of each backbone cable segment should be measured and recorded.

A.3 Optical Fiber Cabling

TIA/TSB-140 describes the methods by which optical fiber cabling is to be tested. An optical fiber cabling link may consist of a fiber or concatenated fibers (spliced, cross-connected or interconnected) with a connector or adapter on each end. The fiber type, link length, the number and quality of terminations and splices, cable stresses, and wavelength can all affect attenuation measurements.

Testing conducted on optical fiber cabling should be in accordance with a published standard. As noted in TIA/TSB-140, testing installed optical fiber cabling for attenuation with an OLTS, as described in cabling standards, and verifying the cabling length and polarity constitutes Tier 1 testing. Tier 2 testing, which is optional, includes the Tier 1 tests plus the addition of an optical time domain reflectometer (OTDR) trace. An OTDR trace can be used to characterize the installed fiber link. These traces provide an indication of the uniformity of cable attenuation, and indicate events along the fiber link. These events may be characterized as insertion loss associated with severe bends in a cable run, connector insertion loss and splice insertion loss.

Tier 1 criteria, as specified in TIA/TSB-140, constitutes conformance testing in accordance with this standard. The attenuation measurement result, using the Tier 1 criteria, shall be less than the designed attenuation budget (also known as loss budget) that is based on the number of terminations and cable length.

A.3.1 Test instruments

OLTS field test instruments for multimode optical fiber shall meet the requirements as specified in ANSI/TIA 526-14-A. OLTS field test instruments for single-mode shall meet the requirements as specified in ANSI/TIA 526-7. Additionally, the light source is to meet the launch requirements of ANSI/TIA 455 78B. This launch condition can be achieved either within the field-test instrument by the manufacturer, or by use of an external mandrel wrap applied to the source test jumper with a Category 1 Coupled Power Ratio (CPR) light source.

NOTE–Refer to ANSI/TIA 526-14-A for details on measuring source CPR.

The mandrel-wrap is installed on the transmit test jumper of an OLTS having an overfilled launch when it is used to measure the link loss of multimode fiber links. The installation of the mandrel wrap is performed by wrapping a length of fiber around a smooth round mandrel (rod) for a total of five (5) non-overlapping wraps. A mandrel wrap is never installed on the receive test jumper (optical power meter). Table 6 shows mandrel diameters for typical cabled fiber types.

NOTE – The mandrel diameters are based on nominal values of 20 mm and 25 mm reduced by the cable diameter and rounded up.

A.3.2 Performance parameters

OLTS field tests required for optical fiber cabling are as follows:

• Length
• Polarity
• Attenuation

A.3.3 Cabling test configuration

ANSI/TIA 568-B.1 specifies the use of a one jumper reference as described in ANSI/TIA-14-A for multimode cabling and ANSI/TIA 526-7 for single-mode cabling. The following subclauses describe the process for testing multimode fiber cabling with a one jumper reference and the test jumper connected to the source having five non-overlapping wraps of multimode fiber on a mandrel. The procedure is also applicable to single-mode cabling, however, the five non-overlapping wraps of multimode fiber would be replaced with a single 1.2 inch diameter loop of single-mode fiber.

A.3.3.1 Verifying test jumper quality

To verify that the test jumpers are in acceptable condition, first reference the light source to the optical power meter . Disconnect test jumper (J1) from the power meter (only) and insert a second test jumper (J2) by connecting it to the power meter and to (J1) with a mating adapter and record the measurement. Disconnect both ends of J2, interchange the ends, and reconnect it and record the measurement. The resulting measurements, P_{verify}, should be within the appropriate connector loss specification. For example, if the connector used is specified at 0.75 dB, the reading on the power meter should be within 0.75 dB of P1.

Table 6. Acceptable mandrel diameters for common multimode cable types (five wraps)

Fiber Core/Cladding Size (µm)	900 µm Buffered Fiber (mm)	2.0 mm Jacketed Cable (mm)	2.4 mm Jacketed Cable (mm)	3.0 mm Jacketed Cable (mm)
50/125	25	23	23	22
62.5/125	20	18	18	17

A.3.3.2 Steps to measure the cabling optical loss

The one jumper reference is used to measure the cabling optical loss. The test jumpers shall be 3.3 ft to 16.4 ft in length and shall be verified to ensure they are of acceptable quality. The basic steps taken to measure and calculate multimode cabling attenuation include:

1) Verifying test jumper quality (once before testing)

2) Setting the reference (once before testing)

3) Measuring link attenuation (each link)

4) Calculating link attenuation (each link)

A.3.3.3 Setting the reference

When referencing the light source to the power meter, one test jumper (J1) is to be connected between the light source and the power meter and a reference measurement taken (P1[dBm]).

NOTE – To improve the stability of the reference reading and for easier handling, it may be helpful to secure the mandrel to the light source by some means such as a cable tie or tape. Care should be taken to ensure that the fiber jacket is not deformed or damaged when using a cable tie or tape.

A.3.3.4 Measuring link attenuation

Connect the end of test jumper (J1) (source end) to one end of the link, and connect an acceptable test jumper (J2) between the other end of the link and the meter *(see Figure 28 on next page)*. The optical power reading is P2 (dBm).

A.3.3.5 Calculating link attenuation

Equation 1 is used to determine the fiber cabling link loss (attenuation).

where:
P1 = Reference power measurement
P2 = Cabling test power measurement

$$Attenuation(dB) = P_1(dBm) - P_2(dBm)$$

Appendix B: Calculating The Loss Budget For A Fiber Optic Cable Plant

Calculating the loss budget for a fiber optic link determines what is the maximum loss expected in a normal installation. The loss measured by an OLTS (Optical Loss Test Set) should be less than the loss calculated by the following method:

B.1 Information Necessary:

Length of the link
Number of connectors Number of splices.

B.2 Process:

Calculate the loss of the fiber
Calculate the loss of all connections
Calculate the loss of all splices
Add all losses to get the total loss

B.3 To calculate the fiber loss:

Multiply the length of the fiber times the attenuation at each wavelength:
850 nm: (length in km) X (3.5 dB/km @ 850 nm) = fiber dB loss @ 850 nm
1300 nm: (length in km) X (1.5 dB/km @ 1300 nm) = fiber dB loss @ 1300 nm

B.4 To calculate the connector loss:

Multiple the number of connectors times the maximum allowable loss of 0.75 dB (count the connectors on each end as one each and each mated pair as one connector loss)
(Number of connectors) X (0.75 dB) = Connector loss in dB

B.5 To calculate the splice loss:

Multiple the number of splices times the maximum allowable loss of 0.3 dB
(Number of splices) X (0.3 dB) = Splice loss in dB

B.6 To calculate the total cable loss, add the losses calculated above:

Total fiber loss in dB = (fiber loss) + (connector loss) + (splice loss)

B.7 Interpreting the result:

Use these numbers as "pass/fail" limits for testing. If the field-measured loss is higher than the calculated value, troubleshoot the installation

Appendix C: Definitions, Acronyms, Abbreviations, And Units Of Measure

C.1 Definitions

For the purposes of this document, the following definitions apply:

Administration
The method for labeling, documentation, and usage needed to implement moves, additions, and changes of the telecommunications infrastructure.

Alien Crosstalk
A measure of the unwanted signal coupling between adjacent cabling or components.

All-Thread-Rod
A straight section of round rod stock that has threads installed over its entire length. Also known as a threaded rod (ATR).
American wire gauge:

Anchor
1. A fastening device.
2. In an outside plant environment, a device made up of a single plate or series of flat plates and combined with a rod having a connecting eye.

Architectural Structures
Walls, floors, floor/ceilings, and roof/ceilings that are load bearing.

As-built
The documentation of measurements, location, and quantities of material work performed. May be in the form of marked up documents or other work order forms.

Attenuation
The decrease in magnitude of transmission signal strength between points, expressed as the ratio of output to input. Measured in decibels (dB), usually at a specific frequency for copper or wavelength for optical fiber, the signal strength may be power or voltage.

Authority Having Jurisdiction (AHJ)
The entities responsible for interpretation and enforcement of local building and electrical codes.

Backboard
A panel (e.g., wood, metal) used for mounting connecting hardware and equipment.

Backbone
1. A facility (e.g., pathway, cable, conductors) between any of the following spaces: telecommunications rooms, telecommunications enclosures, common telecommunications rooms, floor-serving terminals, entrance facilities, equipment rooms, and common equipment rooms.
2. In a data center, a facility (e.g., pathway, cable, conductors) between any of the following spaces: entrance rooms or spaces, main distribution areas, horizontal distribution areas, and telecommunications rooms.

Backbone Cable
See *Backbone* and *Backbone Cabling.*

Backbone Cabling
Cable and connecting hardware that provides interconnections between telecommunications rooms, equipment rooms, and entrance facilities. *See backbone.*

Backbone Pathway
The portion of the pathway system that permits the placing of backbone cables between the entrance location and all crossconnect points within a building and between buildings.

Bandwidth
1. A range of frequencies available for signaling expressed in hertz.
2. The information handling capability of a medium, expressed in units of frequency (hertz).

Beam Clamp
A device attached to a building structure to hold cable supports or equipment.

Bend Radius
The radius of curvature that a media can bend without signal degradation.

Binder Group
One of two or more bound copper pairs or optical fiber strands within a cable.

Blueprint
A reproduction of an architectural plan and/or technical drawing that provides details of a construction project or an existing structure.

Bonding
The permanent joining of metallic parts to form an electrically conductive path that will ensure electrical continuity and the capacity to conduct safely any current likely to be imposed.

Bonding Conductor
A conductor used specifically for the purpose of bonding.

Bonding Conductor for Telecommunications
A conductor that interconnects the building's service equipment (power) ground to the telecommunications grounding system.

Braid
A group of non-insulated conductors interwoven to surround one or more insulated conductors.

Bullwheel
A large wheel used to maintain an arc when feeding large cables into a backbone pathway.

Bundle
1. Many individual optical fibers contained within a single jacket or buffer tube. Also, a group of buffered optical fibers distinguished in some fashion from another group in the same cable core.
2. Also used to indicate time and common handling of multiple cables routed together.

Cabinet
A container that may enclose connection devices, terminations, apparatus, wiring, and equipment.

Cable
An assembly of one or more insulated conductors or optical fibers within an enveloping sheath.

Cable Run
A length of installed media, which may include other components along its path.

Cable Sheath
A covering over the optical fiber or conductor assembly that may include one or more metallic members, strength members, or jackets.

Cable Support System
A combination of conduits, cable trays, support hooks, tie wraps, and any other hardware pieces used in a cabling installation to support cables. Cable support systems keep excess stress off the cables and may provide some mechanical protection to the cables being supported.

Cable Termination
The connecting or termination hardware applied to the end of a cable for the purpose of facilitating connection to active or passive transmission equipment.

Cable Tray
A rigid structure for supporting, housing and protecting cables or conductors. Usually consists of one-piece solid or ventilated bottom or individual transverse members with two side rails.

Cable Tree
A vertical rack with multiple arms for holding small reels of cable.

Cabling
A system of cables, cords, and connecting hardware. Equipment/patch cords, and connecting hardware.

Cabling System
A specific system of cables, equipment/patch cords, connecting hardware, and other components supplied as a single entity.

Channel
1. The end-to-end transmission path connecting interfaces of any two pieces of application-specific equipment. Equipment cords and work area cords are included in the channel.
2. In frequency division multiplexing, a band in the frequency spectrum that is assigned to a specific logical connection.
3. In time division multiplexing, a time that is assigned to a specific logical connection.

Channel Stock
A metallic U-shaped bar with or without evenly spaced holes. Often hung in a trapeze configuration for support of pathway systems, such as conduits and cable trays.

Circuit
The electrical or optical path used for communications between two devices.

Code
A rule intended to ensure safety during the installation and use of materials, components, fixtures, systems, premises, and related subjects. Codes are typically invoked and enforced through government regulation.

Commercial Building Conduit
A building, or portion thereof, that is intended for office use.
1. A raceway of circular crosssection.
2. A structure containing one or more ducts.

Conduit Stub-out
A short section of conduit that is installed from a receptacle box, usually in a wall, curved into an accessible ceiling space.

Conduit Stub-up
A short section of conduit that is installed from a receptacle box, usually in a wall, into an accessible ceiling space directly above the receptacle box.

Cone
Safety marker that is used to designate a secure off-limits area for non-workers.

Connecting Hardware
A device, or combination of devices, used to connect two cables or cable elements.

Connector
A mechanical device used to provide a means for aligning, attaching, and achieving continuity between conductors or optical fibers.

Consolidation Point
A location for interconnection between horizontal cables extending from building pathways and horizontal cables extending into furniture pathways.

Core
The central, light-carrying part of an optical fiber through which light pulses are transmitted.

Crimp
The act of clamping connectors to a cable.

Cross-connect
A facility enabling the termination of cable elements and their interconnection or cross-connection.

Cross-connection
A connection scheme between cabling runs, subsystems, and equipment using patch cords or jumpers that attach to connecting hardware on each end.

Crossed Pairs
An error condition where physical connection of a wire or wires in a pair of wires is made to another wire or wires in yet another pair of wires generally found in the same cable.

Decibel
A logarithmic unit for measuring the relative voltage, power (in watts) or strength (in voltage or current) of a signal. A decibel is one tenth of a bel.

Distribution Ring
Wire management ring shaped like the letter D for routing and supporting distribution cables and jumpers/patch cables on a backboard.

Dressing
Placing cables into a neat and symmetrical pattern for proper alignment and positioning for termination.

Drywall
An interior wall construction consisting of gypsum or plasterboard.

Duct
1. A single enclosed raceway for conductors, wires, or cables. See also raceway.
2. An enclosure in which air is moved. Generally part of the heating, ventilating, and air-conditioning system of a building.

Entrance Facility (Telecommunications)
An entrance to a building for both public and private net work service cables (including antennae) including the entrance point at the building wall and continuing to the entrance room or space.

Entrance Room (Telecommunications)
A space in which the joining of campus or building telecommunications backbone facilities takes place.

Equipment Room (Telecommunications)
An environmentally controlled centralized space for telecommunications equipment that usually houses a main or intermediate cross-connect.

Fire Retardant
Any substance added to delay the start of fire ignition or to slow the spread of flame by the burning material.

Firestop
A fire-rated material, device, or assembly of parts installed in a penetration of a fire-rated barrier.

Firestop System
A specific listed assembly consisting of the material(s) (firestop penetration seals)
that fill the opening in the wall or floor assembly, and around and between any items that penetrate the wall or floor (e.g., cables, cable trays, conduit, ducts, pipes), and any termination devices (e.g., electrical outlet boxes) along with their means of support.

Firewall
1. A continuous barrier used to prevent fire spreading from one fire zone or area to another.
2. One or more security mechanisms (hardware and/or software) designed to prevent, detect, suppress, and/or contain unauthorized access to a network.

Floor Slab
1. That part of a reinforced concrete floor, which is carried on beams below.
2. A concrete mat poured on subgrade serving as a floor rather than as a structural member.

Foldback Splicing
Process of folding back conductors in a splice for future maintenance or rearrangements.

Ground
A conducting connection, whether intentional or accidental, between an electrical circuit or equipment and the earth, or to some conducting body that serves in place of earth.

Ground Electrode
A conductor, usually a rod, pipe, or plate (or group of such conductors), in direct contact with the earth for the purpose of providing a low-impedance connection to earth.

Grounded
Connected to earth or to some conducting body that serves in place of the earth.

Ground Wire
See *bonding conductor* and *bonding conductor for telecommunications*

Grounding System
A system of hardware and wiring that provides an electrical path from a specified location to an earth ground point.

Horizontal Cable
Distribution media that connect the telecommunications outlet/ connector at the work area and the first piece of connecting hardware in the horizontal cross-connect.

Horizontal Cross-connect
A group of connectors (e.g., patch panel, punch-down block) that allows equipment and backbone cabling to be cross-connected with patch cords or jumpers. Floor distributor is the international equivalent term for horizontal cross-connect.

Infrastructure (Telecommunications)
A collection of those telecommunications components, excluding equipment, that together provide the basic support for the distribution of all information within a building or campus.

In-line Splice
A splice in which cable enters one endcap and, after splicing the cable, exits the other endcap of the closure.

Innerduct
A non-metallic pathway, usually circular, placed within a larger pathway.

Insertion Loss
The signal loss resulting from the insertion of a component, or link, or channel, between a transmitter and receiver (compare "Jumper" and "Mushroom"). See *Attenuation*.

Insulation
The dielectric material that physically separates wires and prevents conduction between them.

Insulation Displacement Contact
A type of wire termination in which the insulation that is surrounding a conductor is displaced at the connection point without physically stripping the insulation from the conductor and consequently makes a gas-tight connection to the conductor.

Interconnection
1. A connection scheme that employs connecting hardware for the direct connection of a cable to another cable without a patch cord or jumper.
2. A type of connection in which single-port equipment connections (e.g., 4-pair and optical fiber connectors) attach to horizontal or backbone cabling by means of patch cord or jumper.

Intermediate Cross-connect
The connection point between a backbone cable that extends from the main cross-connect (first-level backbone) and the backbone cable from the horizontal cross-connect (second level backbone).

Jacket
The outer layer of a cable. See *Cable Sheath.*

J-hook
A supporting device for horizontal cables that is shaped like a "J." It is attached to some building structures. Horizontal cables are laid in the opening formed by the "J" to provide support for the cables.

Jumper
1. An assembly of twisted pairs without connectors, used to join telecommunications circuits/links at the cross-connect.

2. An optical fiber cable with connectors installed on both ends. See *Cable Assembly.*

Ladder Rack
A device similar to a cable tray but more closely resembles a single section of a ladder. It is constructed of metal with two sides affixed to horizontal cross members.

Link
A transmission path between two points, not including terminal equipment, work area cables, patch cables, and equipment cables. Can be up to 90 m (295 ft) in length for horizontal cabling.

Local Area Network
The standard industry term for a network installation that serves a relatively small area (e.g., structured cabling installation serving a building).

Loss
Attenuation of a signal, usually measured in dB.

Main Cross-connect
The cross-connect normally located in the (main) equipment room for cross-connection and interconnection of entrance cables, first-level backbone cables, and equipment cables.

Membrane Penetration
An opening through only one surface or side of a barrier.

Multimode Optical Fiber
An optical wave guide that allows many bound modes to propagate.

Mushroom
See *Spool*.

Network
A series of controllers, all connected via a telecommunications cable.

Optical Fiber
A transmission media using a thin filament of glass or plastic to transmit pulse light signals. Its bandwidth is higher than copper and not subject to electromagnetic interference. The optical fiber consists of a central core (glass or plastic) and an outer cladding.

Optical Fiber Cable
Cable made up of one or more strands of glass consisting of a central core and outer cladding (optical fibers), strength members, and an outer jacket.

Outlet Box (Telecommunications)
A metallic or non-metallic box mounted within a floor, wall, or ceiling and used to hold telecommunications outlets/connectors or transition devices.

Outlet/Connector (Telecommunications)
A connecting device in the work area on which horizontal cable or outlet cable terminates.

Pair
1. Two insulated wires commonly joined. They can be twisted around each other or mated together as in flat cable.
2. One side circuit (two diametrically facing conductors) in a star quad.

Pair Count
1.Indicates how many pairs of grouped conductors are in a cable.
2. The pair identification of cable and pairs serving a location.

Patch Cord
A length of cable with connectors on both ends used to join telecommunications circuits/links at the cross-connect.

Pathway
1. A sequence of connections that provides the connectivity between devices on a network or between networks on an internetwork.
2. The vertical and horizontal route of the telecommunications cable.
3. A facility for the placement of telecommunications cable.

Premises
Building, or set of buildings on common property, that are occupied by a single tenant or landlord.

Pull
1. The act of placing cable by pulling.
2. The longitudinal force acting on a pole as a result of horizontal loading.

Raceway
Any enclosed channel designed for holding wires or cables.

Rack
See *Cable Rack.*

Reel Brake
A device used to control the rate of removal of a cable from a cable reel.

Reversed Pair
A condition in which the conductors in a pair are terminated in the wrong sequence (i.e., tip connects to ring and ring connects to tip).

Ring
A means for identification of one conductor of a pair. Historically associated with the wire connected to the "ring" portion of an operator's telephone plug. See also *Tip*.

Scope of Work
A document that provides detailed statements and descriptions of the work content for the project requirements.

Screened Twisted-pair Cable
A cable with one or more pairs of twisted copper conductors covered with an overall metallic shield. See *Foiled Twisted pair Cable.*

Sheath
See *Cable Sheath.*

Shield
A metallic layer (e.g., copper braids, metal foils, solid tubing) placed around a conductor or group of conductors.

Short
An unintentional low-resistance connection between two conducting materials.

Single-mode Optical Fiber
Optical fiber with a relatively small core diameter of 8–9 micron (micrometers) and a cladding diameter of 125 micron; lightwave propagation is restricted to a single path, or mode, in single-mode optical fiber.

Sleeve
An opening, usually circular, through the wall, ceiling, or floor to allow the passage of cables.

Slot
An opening though a wall, floor, or ceiling usually rectangular, to allow the passage of cables.

Space (Telecommunications)
An area used for housing the installation and termination of telecommunications equipment and cable.

Splice
1. A joining of conductors in a splice closure, meant to be permanent.
2. A device that joins conducting or transmitting media.

Splice Case
A metal or plastic housing with a semi-cylindrical cavity used in identical pairs to clamp around a cable splice to provide a closure.

Splice Closure
A device used to protect a splice. See *Splice Case.*

Split Pair
Transposition of two conductors of separate pairs.

Spool
1. A combination of hardware and software commonly used by print servers to redirect requests destined for a printer.
2. Cylindrical containers of cable. See cable reel.
3. A cylindrical guide, typically used for routing jumpers, cross-connects, and patch cords.

Standard
A collection of requirements that encompass properties of components and systems that are intended to ensure an accepted degree of functionality and longevity.

Stub-out
See *Conduit Stub-out*.

Stub-up
See *Conduit Stub-up*.

Suspended Ceiling
A ceiling that creates an area or space between the ceiling material and the building structure above.

Telecommunications
Any transmission, emission, and reception of signs, signals, writings, images, and sounds; that is, information of any nature by cable, radio, optical, or other electromagnetic systems.

Telecommunications Enclosure
A case or housing for telecommunications equipment, cable terminations, and crossconnect cabling.

Telecommunications Entrance Facility
See *Entrance Facility (Telecommunications).*

Telecommunications Entrance Room
See *Entrance Room (Telecommunications).*

Telecommunications Equipment Room
See *Equipment Room (Telecommunications).*

Telecommunications Grounding Busbar
A common point of connection for telecommunications system and equipment bonding to ground; located in the telecommunications room or equipment room.

Telecommunications Main Grounding Busbar
A busbar placed in a convenient and accessible location and bonded, by means of the bonding conductor for telecommunications, to the building service equipment (power) ground.

Telecommunications Outlet
See *Outlet/Connector (Telecommunications).*

Telecommunications Room
An enclosed space for housing telecommunications equipment, cable terminations, and cross-connects. The room is the recognized cross-connect between the backbone cable and horizontal cabling.

Tie Wrap
Plastic or hook and loop strip used for binding and dressing cable.

Tip
A means for identification of one conductor of a pair. Historically, associated with the wire connected to the tip portion of an operator's telephone plug. See *Ring*.

Trapeze
A support device using threaded rod and channel stock.

Twisted-pair
Two individually insulated copper wires physically twisted together to form a balanced pair.

Twisted-pair Cable
A multiconductor cable comprising two or more copper conductors twisted in a manner designed to cancel electrical interference. Also called *balanced twisted-pair cable.*

Underfloor Raceway
A pathway placed within the floor and from which wires and cables emerge to a specific floor area.

Unshielded Twisted-pair Cable
Cable containing one or more pairs of twisted copper without metallic shielding. The entire assembly is covered with an insulating sheath (cable jacket).

Volt (V)
A unit of electromotive force or potential difference that will cause a current of one ampere to flow through a resistance of one ohm.

Wavelength
The distance between two points in the same phase in consecutive cycles measured in the direction of propagation.

Wire
An individually insulated solid or stranded metallic conductor.

Wireway
An enclosed pathway for cables.

Work Area (Workstation)
A building space where the occupants interact with telecommunications terminal equipment.

Work Area Outlet
A connecting device for termination of horizontal media. See also telecommunications outlet/connector.

C.2 Fiber Optic Definitions

Attenuation
The reduction in optical power as it passes along a fiber, usually expressed in decibels per kilometer (db/km). See *optical loss*.

Attenuation Coefficient
The *optical* loss of fiber per unit length, expressed in db/km.

Backscattering
The scattering of light in a fiber back toward the source, used to make OTDR (Optical Time Domain Reflectometer) measurements.

Bandwidth
The range of signal frequencies or bit rates within which a fiber optic component, link, or network will operate.

Bending or Microbending Loss
Loss in fiber caused by stress on the fiber bent around a restrictive radius. Most fiber optic cables are specified for a radius of 10 times the cable diameter unloaded or 20 times the cable diameter under pulling tension.

Buffer
A protective plastic coating applied directly to the optical fiber. Also called *primary coating.*

Cable
One or more fibers enclosed in protective coverings and strength members.

Cable Plant
The combination of fiber optic cable sections, connectors and splices forming the optical path between two terminal devices.

Cladding
The lower refractive index optical cladding over the core of the fiber that "traps" light back into the core.

Composite Cable
A cable containing both optical fibers and electrical conductors.

Connector
A device that provides a demountable connection between two fibers or a fiber and an active device.

Continuity Tester
A visible light source used to confirm continuity and trace fibers.

Core
The center of the optical fiber through which light is transmitted.

Decibel (dB)
A unit of measurement of optical power that indicates relative power on a logarithmic scale. dB=10 log (power ration).

Dispersion
The spreading of a pulse in an optical wave-guide that affects bandwidth. May be caused by modal or chromatic effects.

End Finish
The quality of the end surface of a fiber prepared for splicing or terminated in a connector, tested by visual inspection in a microscope.

Ferrule
A precision tube, which holds a fiber in alignment for interconnection or termination. A ferrule may be part of a connector or mechanical splice.

Fiber Optics
Light transmission through flexible transmissive fibers for communications or lighting.

Fiber Tracer
An instrument that couples visible light into the fiber to allow visual checking of continuity and tracing for correct connections.

Fresnel Reflection
Light reflected from the cleaved or polished end of a fiber caused by the difference of refractive indices of air and glass. Also called *Back Reflection* or *Optical Return Loss.*

Fusion Splicer
A precision instrument that joins two fibers together by melting and fusing them, typically with an electric arc.

Graded Index Fiber
A type of multimode fiber, which uses a graded profile of refractive index in the core material to correct for modal dispersion.

Hybrid Cable
An optical cable containing both singlemode and multimode fibers.

Index Matching Fluid Or Gel
A fluid or gel with a refractive index similar to the fiber used to match the materials at the ends of two fibers to reduce loss and back reflection.

Insertion Loss
The loss caused by the insertion of a component such as a splice or connector in an optical fiber. Also refers to the loss of a cable or cable plant when tested with an optical loss test set.

Jacket
The protective outer coating of the cable.

Lambda (λ)
Greek letter used as a symbol for wavelength.

Launch Cable
A high quality fiber optic reference jumper cable used for loss testing, attached to a source and calibrated for output power.

Link, Fiber Optic
A combination of transmitter, receiver and fiber optic cable capable of transmitting data.

Loss Budget
The estimated amount of power lost in the link.

Loss Margin
The additional amount of loss that can be tolerated in a link. Also the difference between the loss acceptable to the networking equipment and the actual loss of the link.

Mechanical Splice
A permanent joint between two fibers made with a mechanical alignment device that usually contains index matching gel or adhesive.

Microscope, Fiber Optic Inspection
A microscope used to inspect the end surface of a connector for flaws or contamination, or a fiber for cleaves quality.

Multimode Fiber
A fiber with core diameter much larger than the wavelength of light transmitted. It allows many modes (rays) of light to propagate.

Optical Fiber
An optical waveguide comprised of a light carrying core, surrounding cladding which traps light in the core and the primary coating.

Optical Loss
The amount of optical power lost as light is transmitted through fiber, splices, couplers, etc.

Optical Loss Test Set (OLTS)
Tester comprised of fiber optic power meter and test source used to test the loss of components or cable plants.

Optical Power
The amount of radiant energy per unit time, expressed in linear units or watts or on a logarithmic scale in dBm (where dB=10 log (power/1 mW), 0 db=1 mw.

Optical Time Domain Reflectometer (OTDR)
An instrument that uses backscattered light to find faults in optical fiber and to infer loss for troubleshooting.

Overfilled Launch
A condition for launching light into the fiber where the incoming light has a spot size and NA larger than acceptance cone of the fiber, thereby filling all modes in the fiber.

Pigtail
A short length of fiber attached to a fiber optic component such as a connector, laser, or coupler. Pigtails with connectors can be spliced onto cables as an alternative to direct termination.

Power Budget
For network equipment, the difference (in db) between the transmitted optical power (in dbm) and the receiver sensitivity (in dbm).

Power Meter, Fiber Optic
An instrument that measures optical power emanating from the end of a fiber.

Receive Cable
A high quality fiber optic reference jumper cable, attached to a power meter used for loss testing.

Reference Test Cable
A short single fiber jumper cable with connectors on both ends used for testing. The fiber and connectors must match the cables to be tested.

Singlemode Fiber
A fiber with a small core, only a few times the wavelength of light transmitted, that only allows one mode of light to propagate.

Splice
A joint or permanent connection between two fibers. *See Fusion Splice* and *Mechanical Splice.*

Step Index Fiber
A multimode fiber where the core is composed of a material with the same index of refraction.

Termination
Preparation of the end of a fiber to allow non-permanent joining to another fiber or an active device, sometimes called *connectorization.*

Test Source
A laser diode or LED used to inject an optical signal into fiber for testing loss of the fiber or other components.

Visual Fiber Tracer
A device that couples low power visible light from a lamp or LED to allow tracing fibers and testing continuity.

Visual Fault Locator
A device that couples high power visible light from a laser into the fiber to allow finding breaks, stress loss, visual tracing and testing continuity.

Wavelength
A measure of the color of light, usually expressed in nanometers (nm) or microns (µm).

Wavelength Division Multiplexing (WDM)
A technique of sending signals of several different wavelengths of light into a fiber simultaneously.

Working Margin
The difference (in dB) between the power budget and the loss budget (i.e. The excess power margin).

C.3 Acronyms, abbreviations and units of measure

AHJ Authority Having Jurisdiction

ATR All Threaded Rod

the City City Of San Antonio

CPR Coupled Power Ratio

dB decibel

dBm decibel milliwatt

EF Entrance Facility

EMI Electro-Magnetic Interference

EMT Electrical Metallic Tubing

ER Equipment Room

ft feet, foot

HC Horizontal Cross-connect

HVAC Heating, Ventilation, and Air Conditioning

IC Intermediate Cross-connect

IDC Insulation Displacement Contact

IDF Intermediate Distribution Facility

IMC Intermediate Metal Conduit

in inch

km kilometer

kVA kiloVolt Amp

LIU fiber optic interconnect unit

m meter

µm micron; one millionth of a meter (0.000001 meter); also called *micrometer*

MC main cross-connect

MDF Main Distribution Facility

MHz megahertz

mm millimeter

NEC National Electrical Code

NECA National Electrical Contractors Association

NESC National Electrical Safety Code

NFPA National Fire Protection Association

OLTS Optical Loss Test Set

OTDR Optical Time Domain Reflectometer

RMC Rigid Metal Conduit

ScTP Screened Twisted-Pair

TBB Telecommunication Bonding Backbone

TGB Telecommunications Grounding Busbar

TIA Telecommunications Industry Association

TMGB Telecommunications Main Grounding Busbar

TR Telecommunications Room

TSB Telecommunications Systems Bulletin

UTP Unshielded Twisted-Pair

Appendix D: Bibliography And References

This appendix contains information on the documents that are related to or have been referenced in this document. Many of the documents are in print and are distributed and maintained by national or international standards organizations. These documents can be obtained through contact with the associated standards body or designated representatives. The applicable electrical code in the United States is the NEC.

American National Standards Institute (ANSI)
25 West 43rd St., 4th Floor
New York, NY 10036
USA
(212) 642-4900
www.ansi.org

X3.166-1990, *ANSI Standard for Token Ring FDDI Physical Layer Medium Dependent (PMD)*

Z136.2-1997, *American Standard for the Safe Operation of Optical Fiber Communication Systems Utilizing Laser Diode and LED Sources*

American Society for Testing and Materials (ASTM)
100 Barr Harbor Drive
West Conshohocken, PA 19428-2959
USA
(610) 832-9585
www.astm.org

ASTM B539 2002, *Measuring Contact Resistance of Electrical Connections (Static Contacts)*
BICSI a Telecommunications Association
8610 Hidden River Parkway
Tampa, FL 33637-1000
USA
(800) 242-7405
www.bicsi.org

BICSI *Telecommunications Distribution Methods Manual*
BICSI *Information Transport Systems Installation*
BICSI *Customer-owned Outside Plant Methods Manual*

Telecommunications Industry Association (TIA)
2500 Wilson Blvd., Suite 300
Arlington, VA 22201-3836
USA
(703) 907-7700
www.tiaonline.org

ANSI/TIA 492AAAB-1998 (r2002), *Detail Specification for 50 µm Core Diameter/125 µm Cladding Diameter Class of Multimode, Graded-Index Optical Waveguide Fibers*

TIA 455-B-1998, *Standard Test Procedures for Fiber Optic Fibers, Cables and Transducers, Sensors, Connecting and Terminating Devices, and other Fiber Optic Components*

ANSI/TIA 492AAAA-A-1997 (r2002), *Detail Specification for 62.5 µm Core Diameter/125 µm Cladding Diameter Class Ia Graded-Index Multimode Optical Fibers*

ANSI/TIA 492CAAA-1998 (r2002), *Detail Specification for Class IVa Dispersion-Unshifted Single-mode Optical Fibers*

ANSI/TIA/EIA 526-7-2003, *OFSTP 7-Optical Power Loss Measurements of Installed Single-mode Fiber Cable Plant*

ANSI/TIA/EIA 526-14-A-1998 (r2003), *OFSTP 14-Optical Power Loss Measurements of Installed Multimode Fiber Cable Plant*

ANSI/TIA 568-B Series 2003, *Commercial Building Telecommunications Cabling Standard*

ANSI/TIA 598-B-2001, *Optical Fiber Cable Color Coding*

ANSI/TIA 604-3-A-2000, *FOCIS 3 Fiber Optic Interconnector Intermateability Standard*

ANSI/TIA 606-A, *Administration Standard for the Telecommunications Infrastructure of Commercial Buildings*

ANSI J-STD-607-A 2002, *Commercial Building Grounding and Bonding Requirements for Telecommunications*

ANSI/TIA-758 A 2004, *Customer-owned Outside Plant Telecommunications Cabling Standard*

ANSI/TIA-569-B-2004, *Commercial Building Standard for Telecommunications Pathways and Spaces*

TIA/TSB 31-B, FCC 47 CFR 68, *Rationale and Measurement Guidelines*

TIA/TSB-140, 2004; *Additional Guidelines for Field-Testing Length, Loss and Polarity of Optical Fiber Cabling Systems*

Federal Communications Commission (FCC)
445 12th Street SW
Washington, DC 20554
USA
(888) 225-5322
www.fcc.org

Federal Communications Commission (FCC) Washington D.C., *"The Code of Federal Regulations, FCC 47 CFR 68"*

Federal and Military Specifications
National Communications System (NCS)
Technology and Standards Division
701 South Court House Road
Arlington, VA 22204-2198
USA
(703) 607-6200
www.ncs.gov

FIPS PUB 174, *Commercial Building Telecommunications Wiring Standard*

Insulated Cable Engineers Association, Inc. (ICEA)
PO Box 1568
Carrolton, GA 30112
USA
(770) 830-0369
www.icea.net

ANSI/ICEA S-80-576-2002, *Category 1 & 2 Individually Unshielded Twisted Pair Indoor Cables for use in Communications Wiring Systems*

ANSI/ICEA S-83-596-2001, *Fiber Optic Premises Distribution Cable*

ICEA S-87-640-1999, *Fiber Optic Outside Plant Communications Cable*

International Electrotechnical Commission (IEC)
Sales Department
PO Box 131
3 rue de Varembe
1211 Geneva 20
Switzerland
+41 22 34 01 50
www.iec.ch

IEC 60603-7-1996, *Detail Specification for Connectors, 8 Way, Including Fixed and Free Connectors with Common Mating Features*

The Institute of Electrical and Electronic Engineers, Inc (IEEE)
IEEE Operations Center
445 Hoes Ln., PO Box 1331
Piscataway, NJ 08854-1331
USA
(732) 981-0060
www.ieee.org

ANSI/IEEE C2-2002, *National Electrical Safety Code*

ANSI/IEEE C62.11-2005, *Metal Oxide Surge Arrestors for AC Power Circuits*

IEEE 802.3-2005 (also known as ISO 8802-3:2003), Part 3: *Carrier Sense Multiple Access with Collision Detection (CSMA/CD) Access Method and Physical Layer Specifications*

IEEE 802.7-1989 (R1997) *IEEE Recommended Practices for Broadband Local Area Networks*

National Electrical Manufacturers Association (NEMA)
1300 N. 17th Street, Suite 1847
Rosslyn, VA 22209
USA
(703) 841-3200
www.nema.org

NEMA 250-2003, *Enclosures for Electrical Equipment (1000 Volts Maximum)*

National Fire Protection Association (NFPA)
Batterymarch Park
Quincy, MA 02269
USA
(617) 770-3000
www.nfpa.org

ANSI/NFPA 70-2005, *National Electrical Code*

ANSI/NFPA 75-2003; *Standard for the Protection of Information Technology Equipment*

NFPA/NESC-2002, *National Electrical Safety Code*

NFPA 101-2005, *Life Safety Code*

Society of Cable Telecommunications Engineers (SCTE)
140 Philips Rd.
Exton, PA 19341-1318
USA
(800) 542-5040
www.scte.org

ANSI/SCTE 74-2003, (formerly IPS SP 001), *Specification for 75-Ohm Braided Flexible RF Coaxial Drop Cable*

ANSI/SCTE 15-2001 (formerly IPS SP 100), *Specification for Trunk, Feeder and Distribution Coax Cable*

Telcordia (formerly BELLCORE)
Telcordia Corporate Headquarters
One Telcordia Drive
Piscataway, NJ 08854-4157
USA
(732) 699-2000

www.telcordia.com

Bellcore GR 1503 CORE,March 1995, *Bellcore Generic Requirements for Coaxial Connectors (Series 59, 6, 7 and 11)*

Underwriters Laboratories, Inc. (UL)
333 Pfingsten Road
Northbrook, IL 60062-2096
USA
(847) 272-8800
www.ul.com

UL 444/CSA C22.2 No. 214 02, *Communications Cables*
The organizations listed below can be contacted to obtain reference information.
Canadian Standards Association (CSA)
5060 Spectrum Way
Mississauga, Ontario
L4W 5N6 Canada
(800)-463-6727
www.csa.ca

Electronic Industries Alliance (EIA)
2500 Wilson Blvd., Suite 400
Arlington, VA 22201-3836
USA
(703) 907-7500
www.eia.org

IPC, Association Connecting Electronics Industries
3000 Lakeside Dr. 309 S
Bannockburn, IL 60015
USA
(847) 615-7100
www.ipc.org

International Organization for Standardization (ISO)
1, Rue de Varembé
Case Postale 56
CH-1211 Geneva 20
Switzerland
+41 22 749 01 11
www.iso.org

Current *NEIS* Published by NECA:

National Electrical Contractors Association
3 Bethesda Metro Center, Suite 1100
Bethesda, MD 20814
(301) 657-3110 tel

(301) 215-4500 fax
www.neca-neis.org

NECA 1-2000, *Standard Practices for Good Workmanship in Electrical Contracting* (ANSI)

NECA 90-2004, *Recommended Practice for Commissioning Building Electrical Systems* (ANSI)

NECA 100-1999, *Symbols for Electrical Construction Drawings* (ANSI)

NECA 101-2001, *Standard for Installing Steel Conduits (Rigid, IMC, EMT)*

NECA 102-2004, *Standard for Installing Aluminum Rigid Metal Conduit* (ANSI)

NECA/AA 104-2006, *Recommended Practice for Installing Aluminum Building Wire and Cable* (ANSI)

NECA/NEMA 105-2002, *Recommended Practice for Installing Metal Cable Tray Systems* (ANSI)

NECA 111-2003, *Standard for Installing Nonmetallic Raceways (RNC, ENT, LFNC)* (ANSI)

NECA/NACMA 120-2006, *Standard for Installing Armored Cable (AC) and Metal-Clad Cable (MC)* (ANSI)

NECA 200-2002, *Recommended Practice for Installing and Maintaining Temporary Electrical Power at Construction Sites* (ANSI)

NECA 202-2001, *Recommended Practice for Installing and Maintaining Industrial Heat Tracing Systems* (ANSI)

NECA 230-2003, *Standard for Selecting, Installing, and Maintaining Electric Motors and Motor .Controllers* (ANSI)

NECA/FOA 301-2004, *Standard for Installing and Testing Fiber Optic Cables* (ANSI)

NECA 303-2005, *Standard for Installing Closed-Circuit Television (CCTV) Systems* (ANSI)

NECA 305-2001, *Standard for Fire Alarm System Job Practices* (ANSI)

NECA 331-2004, *Standard for Building and Service Entrance Grounding and Bonding*

NECA 400-1998, *Standard for Installing and Maintaining Switchboards* (ANSI)

NECA 402-2001, *Recommended Practice for Installing and Maintaining Motor Control Centers* (ANSI)

NECA/EGSA 404-2000, *Recommended Practice for Installing Generator Sets* (ANSI)

NECA 405-2001, *Recommended Practice for Installing and Commissioning Interconnected Generation Systems* (ANSI)

NECA 406-2003, *Standard for Installing Residential Generator Sets* (ANSI)

NECA 407-2002, *Recommended Practice for Installing and Maintaining Panelboards* (ANSI)

NECA 408-2002, *Recommended Practice for Installing and Maintaining Busways* (ANSI)

NECA 409-2002, *Recommended Practice for Installing and Maintaining Dry-Type Transformers* (ANSI)

NECA 410-2005, *Standard for Installing and Maintaining Liquid-Filled Transformers* (ANSI)

NECA/IESNA 500-1998, *Recommended Practice for Installing Indoor Commercial Lighting Systems* (ANSI)

NECA/IESNA 501-2000, *Recommended Practice for Installing Exterior Lighting Systems* (ANSI)

NECA/IESNA 502-1999, *Recommended Practice for Installing Industrial Lighting Systems* (ANSI)

NECA 503-2005, *Standard for Installing Fiber Optic Lighting Systems*

NECA/BICSI 568-2006, *Standard for Installing Commercial Building Telecommunications Cabling* (ANSI)

NECA/MACSCB 600-2003, *Recommended Practice for Installing and Maintaining Medium-Voltage Cable* (ANSI)

NECA/NEMA 605-2005, *Recommended Practice for Installing Underground Nonmetallic Utility Duct* (ANSI)

Project Name: Culebra Road Bulky Waste Facility
Pre-Submittal Date: October 29, 2013
SBEDA Requirements: 29% SBE Subcontracting Goal; 21% M/WBE Subcontracting Goal

CITY OF SAN ANTONIO
CAPITAL IMPROVEMENTS MANAGEMENT SERVICES

I. Small Business Economic Development Advocacy (SBEDA) Program API's Applied:

- **SBE Subcontracting Program - 29%** must be subcontracted to certified SBE(s) designated within the San Antonio Metropolitan Statistical Area (SAMSA)
- **M/WBE Subcontracting Program - 21%** must be subcontracted to certified M/WBE(s) designated within the San Antonio Metropolitan Statistical Area (SAMSA)
  - All M/WBE's must also be certified as SBE's; therefore participation by M/WBE's automatically count towards the SBE goal
- Respondents must demonstrate their commitment to meeting the subcontracting requirements by submitting a signed **Subcontractor/Supplier Utilization Plan** form with their response
  - Failure of a respondent to submit the **Subcontractor/Supplier Utilization Plan** form or meet the subcontracting goals will deem its response NON-RESPONSIVE
- Only first tier certified SBE(s) and M/WBE(s) will count toward the subcontracting goals
- ***SBE or M/WBE Prime participation does NOT count toward the Subcontracting goals***

II. Eligibility Criteria

- Eligibility Certification:
  - SBE
  - SBE and M/WBE (AABE/ABE/HABE/NABE/WBE)
  - Certified through the South Central Texas Regional Certification Agency (SCTRCA) to perform commercially-useful function
- Be considered small under SBA size standards for specific industry category of work being proposed
- Headquartered or demonstrate "significant business presence" in the SAMSA (20% of total company employees regularly based in the SAMSA for at least one year) (SAMSA counties are: Atascosa, Bandera, Bexar, Comal, Guadalupe, Kendall, Medina, or Wilson)
- SBEDA staff can assist with priority certification while solicitation is open

III. Waivers & Exceptions

- A full or partial waiver of a specified subcontracting goal may be requested, for good cause, by submitting the *Respondent Subcontracting Waiver Request* form with the solicitation response
  - Form is available at: **http://www.sanantonio.gov/SBO/SmallBusinessDevelopmentAdvocacyProgram/RevisedSBEDAOrdinanceForms.aspx**
  - Waiver request must fully document subcontractor unavailability despite good faith efforts to comply with the goal
- Respondent may request, for good cause, an Exception to the application of the SBEDA Program by submitting the *Exception to SBEDA Program Requirements Request* form with the solicitation response
  - Form is available at: **http://www.sanantonio.gov/SBO/SmallBusinessDevelopmentAdvocacyProgram/RevisedSBEDAOrdinanceForms.aspx**
  - Exception request must fully document why:
    - Value of contract is below $50,000;
    - No commercially-useful subcontracting opportunities exist; or
    - Type of contract is outside scope of the SBEDA Ordinance

IV. Central Vendor Registry (CVR)

- All contractors/consultants (Prime or Sub) wishing to do business with the City must first register in the CVR
- To begin the registration process, please go to http://www.sanantonio.gov/purchasing/SAePS.aspx
- For technical assistance please call (210) 207-0118

V. Contact Information

- David Rios (210) 207-1339 or david.rios@sanantonio.gov
- Sylvia Ibarra (210) 207-5442 or sylvia.ibarra@sanantonio.gov
- Ruben A. Flores (210) 207-3923 or ruben.a.flores@sanantonio.gov

Good Faith Effort Tips for SBEDA Waivers

1. **Attend Pre-Submission Meeting:** Bidder should indicate whether they attended the relevant pre-bid conference.

Tip: To receive credit for attending a pre-bid meeting, the attendee must be a person who will be directly involved with the project (i.e., owner, project manager, estimator, etc.). The Economic Development Department's (EDD) Small Business Office (SBO) will obtain a copy of the sign-in sheet to confirm attendance.

2. **Subdivide the Work:** Bidder should demonstrate subdivision of the work into commercially useful disciplines or work elements that can be economically performed by S/M/WBEs, when feasible. It is the bidder's responsibility to demonstrate that sufficient work was made available to S/M/WBEs to meet specified SBEDA requirements.

Tip: The work should be subdivided into categories or disciplines to allow for maximum SBE and M/WBE participation. For example:

Project Name:	*San Antonio Blvd. Sidewalks and Traffic Signal Project*
Work Elements:	*Existing Curb and Sidewalk removal – 20%*
	New Curb and Sidewalk construction – 35%
	New Traffic Signal Installation – 30%
	Hauling Services – 10%
	Landscaping – 5%

3. **Advertise:** Bidder should advertise in general circulation, trade publications, or minority/women's business focused media for S/M/WBE subcontractors at a reasonable time prior to the bid due date. A copy of the advertisement, showing the advertisement date(s), name of publication, type of work and amount of work being solicited, must be provided.

Tip: A copy of the advertisement should be submitted, including the date(s) of advertisement and name of publication.

4. **Use Public Databases and Minority/Women's Business Focused Organizations/Services:** Bidder should provide evidence of using the City's Central Vendor Registry, the South Central Texas Regional Certification Agency (SCTRCA), and other organizations' vendor directories/ listings to solicit S/M/WBE subcontractors.

Tips: a.) Bidders may request a list of potential S/M/WBE subcontractors from the EDD's SBO or the Capital Improvements Management Services Department's (CIMS) Small Business Division; b.) SCTRCA's online listing of S/M/WBEs is available at www.sctrca.org; c.) Bidders may use the services and assistance of the SBA, local chambers of commerce, S/M/WBE business associations, and other local outreach programs for locating and contacting S/M/WBEs; d.) To confirm a potential S/M/WBE subcontractor meets the City's SBEDA program eligibility, the bidder may contact EDD's SBO or the CIMS Small Business Division.

5. **Provide Relevant Information to Small Businesses:** Provide documentation that bidder provided S/M/WBEs with information about the requirements of the contract, solicitation timing, and how to obtain plans and specifications, at a reasonable time prior to the bid due date.

Tip: Providing this information in the ad copy, emails and/or fax correspondences during S/M/WBE outreach efforts satisfies this requirement.

6. **Directly Solicit Small Businesses:** Provide documentation of directly soliciting S/M/WBE subcontractors. Copy of emails and fax notices sent directly to SBEs and M/WBEs should be provided. A direct solicitation may include the type of work, amount of work, and a brief specific description of the work being solicited.

Tip: Send email or fax to S/M/WBEs detailing the specific scope of work determined would lend to a subcontracting opportunity. Follow-up with a call to the S/M/WBEs to make sure they received your email or fax (some emails go directly to spam boxes). Document the S/M/WBE company name, contact person, phone number/email address, certifications, result of contact (left message, no answer, etc.) bid received and reason for rejection.

7. **Offer Assistance:** Provide documentation that bidder has offered to assist S/M/WBEs in obtaining bonding, insurance or equipment.

Tip: Submitting the offer to assist with bonding/insurance/equipment included in the ad copy, emails and/or fax correspondences during S/M/WBE outreach efforts satisfies this requirement.

8. **Document bid and negotiation results:** Bidder should negotiate in good faith with interested S/M/WBEs. For any negotiations with S/M/WBEs which were unsuccessful and/or bids received but not accepted, the bidder should document the unsuccessful S/M/WBE subcontractor's company name, telephone number, contact person, price bid (if applicable), and the reason for rejecting the bid.

Tip: If price was the reason for rejecting the bid, the bidder should document the price bid by both the rejected S/M/WBE subcontractor and the accepted low bidder for that particular scope of work.

General Decision Number: TX130002 11/01/2013 TX2

Superseded General Decision Number: TX20120002

State: Texas

Construction Type: Building

County: Bexar County in Texas.

BUILDING CONSTRUCTION PROJECTS (does not include single family homes and apartments up to and including 4 stories). (Use current heavy & highway general wage determination for Paving & Utilities Incidental to Building Construction).

Modification Number	Publication Date
0	01/04/2013
1	03/29/2013
2	04/12/2013
3	07/26/2013
4	11/01/2013

ASBE0087-001 01/01/2012

	Rates	Fringes
Asbestos/Insulator Worker (Includes application of all insulating materials, protective coverings, coatings, and finishings to all types of mechanical systems.)	$ 21.87	8.07

BRTX0001-004 05/01/2011

	Rates	Fringes
BRICKLAYER	$ 24.50	1.97

ELEC0060-001 06/03/2013

	Rates	Fringes
CABLE SPLICER	$ 25.20	3.75+12%
ELECTRICIAN	$ 25.60	4.65+8%

ELEC0060-002 06/01/2009

	Rates	Fringes
ELECTRICIAN (Low Voltage including pulling & installing cable through conduit)	$ 19.51	8%+4.92

ELEV0081-001 01/01/2013

	Rates	Fringes
Elevator Constructor		
MECHANIC	$ 35.89	25.185+a

FOOTNOTE; A. 6% under 5 years based on regular hourly rate for all hours worked. 8% over 5 years based on regular hourly rate for all hours worked.

New Year's Day, Memorial Day, Independence Day, Labor Day, Thanksgiving Day, Friday after Thanksgiving Day, Christmas Day, and Veterans Day.

ENGI0450-001 07/01/2009

	Rates	Fringes
Power equipment operators:		
Cranes	$ 29.75	8.75

---

* IRON0066-001 06/01/2013

	Rates	Fringes
IRONWORKER (Excluding metal building erectors)		
Structural	$ 19.60	5.95

MARB0002-001 07/01/2005

	Rates	Fringes
TILE SETTER	$ 18.50	6.10

PLUM0142-001 07/01/2012

	Rates	Fringes
Plumbers and Pipefitters (Including HVAC WORK)	$ 29.78	9.35

SFTX0669-001 07/01/2013

	Rates	Fringes
SPRINKLER FITTER (Fire Sprinklers)	$ 26.36	16.62

SHEE0067-001 04/01/2009

	Rates	Fringes
Sheet metal worker (Including HVAC Duct Work)	$ 25.18	10.75

SUTX1988-002 11/01/1988

	Rates	Fringes
Acoustical Ceiling Installer.....	$ 12.26	
CARPENTER (Excluding Acoustical Ceiling Installer & Drywall Hanger).....	$ 10.64	
CEMENT MASON/CONCRETE FINISHER...	$ 11.46	
DRYWALL HANGER.....	$ 11.88	
GLAZIER.....	$ 10.78	1.40
IRONWORKER (Excluding Metal Building Assemblers)		
Reinforcing.....	$ 10.19	3.57
Laborers:		
Mason Tenders.....	$ 8.36	1.78
Mortar Mixers.....	$ 8.99	
PLASTERER'S TENDERS.....	$ 8.68	
Unskilled.....	$ 7.25	
LATHER.....	$ 15.25	
PAINTER (Excluding Tapers/Finishers).....	$ 8.01	
PLASTERER.....	$ 15.25	
Power equipment operators:		
Front End Loader.....	$ 7.36	
Roofers:		
Kettlemen.....	$ 8.85	
Roofers.....	$ 8.14	
Waterproofers.....	$ 7.25	
Sheet Metal Worker		
Other Work.....	$ 11.62	
Taper/Finisher.....	$ 7.99	
TRUCK DRIVER.....	$ 7.25	

WELDERS - Receive rate prescribed for craft performing operation to which welding is incidental.

==========

Unlisted classifications needed for work not included within the scope of the classifications listed may be added after award only as provided in the labor standards contract clauses (29CFR 5.5 (a) (1) (ii)).

The body of each wage determination lists the classification and wage rates that have been found to be prevailing for the cited type(s) of construction in the area covered by the wage determination. The classifications are listed in alphabetical order of "identifiers" that indicate whether the particular rate is union or non-union.

Union Identifiers

An identifier enclosed in dotted lines beginning with characters other than "SU" denotes that the union classification and rate have found to be prevailing for that classification. Example: PLUM0198-005 07/01/2011. The first four letters , PLUM, indicate the international union and the four-digit number, 0198, that follows indicates the local union number or district council number where applicable , i.e., Plumbers Local 0198. The next number, 005 in the example, is an internal number used in processing the wage determination. The date, 07/01/2011, following these characters is the effective date of the most current negotiated rate/collective bargaining agreement which would be July 1, 2011 in the above example.

Union prevailing wage rates will be updated to reflect any changes in the collective bargaining agreements governing the rates.

0000/9999: weighted union wage rates will be published annually each January.

Non-Union Identifiers

Classifications listed under an "SU" identifier were derived from survey data by computing average rates and are not union rates; however, the data used in computing these rates may include both union and non-union data. Example: SULA2004-007 5/13/2010. SU indicates the rates are not union majority rates, LA indicates the State of Louisiana; 2004 is the year of the survey; and 007 is an internal number used in producing the wage determination. A 1993 or later date, 5/13/2010, indicates the classifications and rates under that identifier were issued as a General Wage Determination on that date.

Survey wage rates will remain in effect and will not change until a new survey is conducted.

WAGE DETERMINATION APPEALS PROCESS

1.) Has there been an initial decision in the matter? This can be:

* an existing published wage determination
* a survey underlying a wage determination
* a Wage and Hour Division letter setting forth a position on a wage determination matter
* a conformance (additional classification and rate) ruling

On survey related matters, initial contact, including requests for summaries of surveys, should be with the Wage and Hour Regional Office for the area in which the survey was conducted because those Regional Offices have responsibility for the Davis-Bacon survey program. If the response from this initial contact is not satisfactory, then the process described in 2.) and 3.) should be followed.

With regard to any other matter not yet ripe for the formal process described here, initial contact should be with the Branch of Construction Wage Determinations. Write to:

Branch of Construction Wage Determinations
Wage and Hour Division
U.S. Department of Labor
200 Constitution Avenue, N.W.
Washington, DC 20210

2.) If the answer to the question in 1.) is yes, then an interested party (those affected by the action) can request review and reconsideration from the Wage and Hour Administrator (See 29 CFR Part 1.8 and 29 CFR Part 7). Write to:

Wage and Hour Administrator
U.S. Department of Labor
200 Constitution Avenue, N.W.
Washington, DC 20210

The request should be accompanied by a full statement of the interested party's position and by any information (wage payment data, project description, area practice material, etc.) that the requestor considers relevant to the issue.

3.) If the decision of the Administrator is not favorable, an interested party may appeal directly to the Administrative Review Board (formerly the Wage Appeals Board). Write to:

Administrative Review Board
U.S. Department of Labor
200 Constitution Avenue, N.W.
Washington, DC 20210

4.) All decisions by the Administrative Review Board are final.

==========

END OF GENERAL DECISION

General Decision Number: TX130016 01/04/2013 TX16

Superseded General Decision Number: TX20120016

State: Texas

Construction Types: Heavy and Highway

Counties: Atascosa, Bandera, Bastrop, Bell, Bexar, Brazos, Burleson, Caldwell, Comal, Coryell, Guadalupe, Hays, Kendall, Lampasas, McLennan, Medina, Robertson, Travis, Williamson and Wilson Counties in Texas.

HEAVY (excluding tunnels and dams, not to be used for work on Sewage or Water Treatment Plants or Lift / Pump Stations in Bell, Coryell, McClennon and Williamson Counties) and HIGHWAY Construction Projects

Modification Number	Publication Date
0	01/04/2013

* SUTX2011-006 08/03/2011

	Rates	Fringes
CEMENT MASON/CONCRETE FINISHER (Paving and Structures)	$ 12.56	
ELECTRICIAN	$ 26.35	
FORM BUILDER/FORM SETTER		
Paving & Curb	$ 12.94	
Structures	$ 12.87	
LABORER		
Asphalt Raker	$ 12.12	
Flagger	$ 9.45	
Laborer, Common	$ 10.50	
Laborer, Utility	$ 12.27	
Pipelayer	$ 12.79	
Work Zone Barricade Servicer	$ 11.85	
POWER EQUIPMENT OPERATOR:		
Asphalt Distributor	$ 15.55	
Asphalt Paving Machine	$ 14.36	
Boom Truck	$ 18.36	
Broom or Sweeper	$ 11.04	
Concrete Pavement Finishing Machine	$ 15.48	
Front End Loader, 3 CY or Less	$ 13.04	
Front End Loader, Over 3 CY	$ 13.21	

Loader/Backhoe.....$ 14.12
Motor Grader, Fine Grade....$ 18.51
Motor Grader, Rough.....$ 14.63
Pavement Marking Machine....$ 19.17
Roller, Asphalt.....$ 12.78
Roller, Other.....$ 10.50
Trenching Machine, Heavy....$ 18.48

Servicer.....$ 14.51

Steel Worker
Reinforcing.....$ 14.00
Structural.....$ 19.29

TRAFFIC SIGNAL INSTALLER
Traffic Signal/Light Pole
Worker.....$ 16.00

TRUCK DRIVER
Single Axle.....$ 11.79
Single or Tandem Axle Dump
Truck.....$ 11.68
Tandem Axle Tractor w/Semi
Trailer.....$ 12.81

WELDER.....$ 15.97

WELDERS - Receive rate prescribed for craft performing operation to which welding is incidental.

==========

Unlisted classifications needed for work not included within the scope of the classifications listed may be added after award only as provided in the labor standards contract clauses (29CFR 5.5 (a) (1) (ii)).

The body of each wage determination lists the classification and wage rates that have been found to be prevailing for the cited type(s) of construction in the area covered by the wage determination. The classifications are listed in alphabetical order of "identifiers" that indicate whether the particular rate is union or non-union.

Union Identifiers

An identifier enclosed in dotted lines beginning with characters other than "SU" denotes that the union classification and rate have found to be prevailing for that classification. Example: PLUM0198-005 07/01/2011. The first four letters , PLUM, indicate the international union and the

four-digit number, 0198, that follows indicates the local union number or district council number where applicable , i.e., Plumbers Local 0198. The next number, 005 in the example, is an internal number used in processing the wage determination. The date, 07/01/2011, following these characters is the effective date of the most current negotiated rate/collective bargaining agreement which would be July 1, 2011 in the above example.

Union prevailing wage rates will be updated to reflect any changes in the collective bargaining agreements governing the rates.

0000/9999: weighted union wage rates will be published annually each January.

Non-Union Identifiers

Classifications listed under an "SU" identifier were derived from survey data by computing average rates and are not union rates; however, the data used in computing these rates may include both union and non-union data. Example: SULA2004-007 5/13/2010. SU indicates the rates are not union majority rates, LA indicates the State of Louisiana; 2004 is the year of the survey; and 007 is an internal number used in producing the wage determination. A 1993 or later date, 5/13/2010, indicates the classifications and rates under that identifier were issued as a General Wage Determination on that date.

Survey wage rates will remain in effect and will not change until a new survey is conducted.

WAGE DETERMINATION APPEALS PROCESS

1.) Has there been an initial decision in the matter? This can be:

* an existing published wage determination
* a survey underlying a wage determination
* a Wage and Hour Division letter setting forth a position on a wage determination matter
* a conformance (additional classification and rate) ruling

On survey related matters, initial contact, including requests for summaries of surveys, should be with the Wage and Hour Regional Office for the area in which the survey was conducted because those Regional Offices have responsibility for the Davis-Bacon survey program. If the response from this initial contact is not satisfactory, then the process described in 2.) and 3.) should be followed.

With regard to any other matter not yet ripe for the formal process described here, initial contact should be with the

Branch of Construction Wage Determinations. Write to:

Branch of Construction Wage Determinations
Wage and Hour Division
U.S. Department of Labor
200 Constitution Avenue, N.W.
Washington, DC 20210

2.) If the answer to the question in 1.) is yes, then an interested party (those affected by the action) can request review and reconsideration from the Wage and Hour Administrator (See 29 CFR Part 1.8 and 29 CFR Part 7). Write to:

Wage and Hour Administrator
U.S. Department of Labor
200 Constitution Avenue, N.W.
Washington, DC 20210

The request should be accompanied by a full statement of the interested party's position and by any information (wage payment data, project description, area practice material, etc.) that the requestor considers relevant to the issue.

3.) If the decision of the Administrator is not favorable, an interested party may appeal directly to the Administrative Review Board (formerly the Wage Appeals Board). Write to:

Administrative Review Board
U.S. Department of Labor
200 Constitution Avenue, N.W.
Washington, DC 20210

4.) All decisions by the Administrative Review Board are final.

==========

END OF GENERAL DECISION

STRUCTURAL NOTES

GENERAL:

GN-1 BUILDING CODE: IBC 2012 EDITION WITH CITY OF SAN ANTONIO AMENDMENT.

GN-2 THE DETAILS DESIGNATED AS "TYPICAL DETAILS", APPLY GENERALLY TO THE DRAWINGS IN ALL AREAS WHERE CONDITIONS ARE SIMILAR TO THOSE DESCRIBED IN DETAILS.

GN-3 THE GENERAL CONTRACTOR SHALL VERIFY AND COORDINATE REQUIREMENTS OF OTHER TRADES (ARCHITECTURAL, MECHANICAL, ELECTRICAL, PLUMBING, ETC.) WITH THE STRUCUTRAL DOCUMENTS PRIOR TO FABRICATION OR INSTALLATION OF OF ANY STRUCTURAL MEMBERS.

GN-4 THE CONTRACTOR AND FABRICATOR SHALL VERIFY ALL QUANTITIES, DIMENSIONS AND CONDITIONS THOROUGHLY WITH THE CONTRACT DOCUMENTS AND THEN NOTIFY THE ARCHITECT/ENGINEER OF ANY DISCREPANCIES OR INCONSISTENCIES BEFORE SUBMITTING SHOP DRAWINGS AND PROCEEDING WITH THE WORK. DO NOT SCALE DRAWINGS FOR DIMENSIONS.

GN-5 COMPLETED SHOP DRAWINGS SHALL BE PROVIDED, AS SPECIFIED, FOR ALL FABRICATED ITEMS AND SHALL BE REVIEWED BY THE GENERAL CONTRACTOR PRIOR TO FABRICATION. STRUCTURAL DRAWINGS SHALL NOT BE REPRODUCED FOR SHOP DRAWINGS. USE OF STRUCTURAL DRAWINGS WITHOUT PERMISSION IS GROUNDS FOR REJECTION OF SHOP DRAWINGS. THE STRUCTURAL ENGINEER WILL REVIEW SHOP DRAWINGS FOR THE LIMITED PURPOSE OF CHECKING FOR CONFORMANCE WITH INFORMATION GIVEN AND THE DESIGN CONCEPT EXPRESSED IN THE CONTRACT DOCUMENTS. THEREFORE, ALL CLOUDED DIMENSIONS, INDICATED ON ANY SHOP DRAWINGS, THAT ARE RELATIVE TO EXISTING STRUCTURES SHALL BE VERIFIED BY THE CONTRACTOR AND FABRICATOR. AS A MINIMUM, THE FOLLOWING SHOP DRAWINGS SHALL BE SUBMITTED:

A. CONCRETE MIX DESIGN FOR EACH TYPE OF CONCRETE TO BE USED.
B. CONCRETE REINFORCING STEEL SHOP DRAWINGS INCLUDING PLACEMENT DRAWINGS AND CUT SHEETS.
C. PREFABRICATED WOOD TRUSSES. (GENERAL CONTRACTOR SHALL SUBMIT TO THE CITY PRIOR TO CERTIFICATE OF OCCUPANCY)
D. PRE-ENGINEERED STEEL FRAMED STRUCTURES (GENERAL CONTRACTOR SHALL SUBMIT TO THE CITY PRIOR TO CERTIFICATE OF OCCUPANCY)

GN-6 SHOP DRAWINGS NOT PREVIOUSLY REVIEWED BY THE GENERAL CONTRACTOR SHALL BE RETURNED WITHOUT REVIEW BY STRUCTURAL ENGINEER. STRUCTURAL ENGINEER DOES NOT BEAR ANY RESPONSIBILITY TO THE STRUCTURAL MEMBERS BUILT WITHOUT APPROVED SHOP DRAWINGS.

GN-7 GENERAL CONTRACTOR SHALL INSPECT JOB FOR COMPLETION BEFORE SCHEDULING ANY OBSERVATION BY THE ENGINEER.

GN-8 SEE ARCHL. AND MEP DRAWINGS FOR LOCATIONS AND SIZES OF SLAB OPENINGS, SLEEVES, INSERTS, ANCHORS AND BOLTS REQUIRED BY VARIOUS TRADES.

GN-9 ALL PLUMBING CONDUITS AT FOUNDATION SHOULD HAVE FLEXIBLE CONNECTIONS TO SUSTAIN A MAXIMUM DIFFERENTIAL MOVEMENT OF 1 INCH.

GN-10 THE STRUCTURE HAS BEEN DESIGNED TO RESIST DESIGN LOADS ONLY AS A COMPLETED STRUCTURE. CONTRACTOR SHALL CONSIDER ALL CONSTRUCTION LOADS APPLIED TO THE PARTIALLY COMPLETED STRUCTURE UNTIL ALL PERMANENT CONNECTIONS ARE MADE, AND ENCLOSED PERMANENTLY AS PER CONSTRUCTION DOCUMENTS. TEMPORARY BRACING SHALL BE PROVIDED BY THE CONTRACTOR IN ALL DIRECTIONS. WHEN REQUIRED, BY THE CONSTRUCTION DOCUMENTS OR THE STRUCTURAL ENGINEER, CONTRACTOR SHALL PROVIDE CALCULATIONS SEALED BY A LICENSED STRUCTURAL ENGINEER IN THE STATE OF TEXAS WHICH VERIFY THE MEANS OF STRUCTURALLY MAINTAINING THE INTEGRITY OF THE COMPLETED PORTION OF THE STRUCTURE.

GN-11 THE CONTRACTOR IS SHALL BE RESPONSIBLE FOR CHECKING THE ADEQUACY OF THE STRUCTURE TO SUPPORT ALL CONSTRUCTION LOADS. THE STRUCUTRAL ENGINEER IS NOT RESPONSIBLE TO DESIGN OR CHECK THE STRUCUTRE FOR CONSTRUCTION ACTIVITIES.

GN-12 ALL EXPOSED MISCELLANEOUS STEEL AND LINTEL ANGLES SHALL BE CLEANED AND GALVANIZED. APPLY ZINC COATING BY THE HOT-DIP PROCESS AND ACCORDING TO A.S.T.M. A123. WHEN APPLICABLE FIELD WELDS, BOLTED CONNECTIONS AND ABRADED AREAS SHALL BE CLEANED AND "TOUCHED UP" WITH GALVANIZING REPAIR PAINT IN ACCORDANCE WITH A.S.T.M. A780. THE GALVANIZING REPAIR PAINT SHALL HAVE A HIGH ZINC-DUST CONTENT WITH DRY FILM CONTAINING NO LESS THAN 95% ZINC-DUST BY WEIGHT, AND COMPLYING WITH THE DOD-P-21035A OR SSPC-PAINT 20.

GN-13 THE ENGINEER SHALL NOT HAVE CONTROL OF, AND SHALL NOT BE RESPONSIBLE FOR, CONSTRUCTION MEANS, METHODS, TECHNIQUES, SEQUENCES, OR PROCEDURES, FOR SAFETY PRECAUTIONS AND PROGRAMS IN CONNECTION WITH THE WORK, FOR THE ACTS OR OMISSIONS OF THE CONTRACTOR, SUBCONTRACTOR, OR ANY OTHER PERSONS PERFORMING ANY OF THE WORK, OR FOR THE FAILURE OF ANY OF THEM TO CARRY OUT THE WORK IN ACCORDANCE WITH THE CONTRACT DOCUMENTS.

GN-14 PERIODIC SITE OBSERVATIONS BY FIELD REPRESENTATIVES OF ALPHA CONSULTING ENGINEERS, INC. ARE SOLELY FOR THE PURPOSE OF DETERMINING IF THE WORK OF THE CONTRACTOR IS PROCEEDING IN ACCORDANCE WITH THE STRUCTURAL CONTRACT DOCUMENTS. THESE LIMITED SITE OBSERVATIONS ARE NOT INTENDED TO BE A CHECK OF THE QUALITY OR QUANTITY OF THE WORK, BUT RATHER PERIODIC IN AN EFFORT TO INFORM THE OWNER OF DEFECTS AND DEFICIENCIES IN THE WORK OF THE CONTRACTOR.

GN-15 PROVIDE CONTROL JOINTS AT 15'-0" ON CENTER MAXIMUM FOR ALL BRITTLE FINISHES.

SCHEDULE OF SITE OBSERVATIONS BY ENGINEER:

SO-1 ALL STRUCTURAL ELEMENTS OF THE BUILDING SHALL BE OBSERVED BY THE STRUCTURAL ENGINEER'S REPRESENTATIVE DURING THE CONSTRUCTION PHASE, SO THAT A FINAL LETTER OF COMPLIANCE CAN BE PROVIDED TO THE OWNER AND/OR BUILDING AUTHORITY.

SO-2 PRIOR TO THE BEGINNING OF CONSTRUCTION, THE CONTRACTOR SHALL ARRANGE A MEETING WITH THE STRUCTURAL ENGINEER TO SET UP A SCHEDULE FOR THE FOLLOWING OBSERVATIONS, NOT TO EXCEED THE SPECIFIED NUMBER OF VISITS:

A. CONCRETE: FOR EACH CONCRETE POUR UNLESS NOTED OTHERWISE BY THE ENGINEER. SEE NOTE 5 OF CONCRETE AND CONCRETE REINFORCEMENT - FIVE VISITS.

B. WOOD ROOF FRAMING: PRIOR TO COVER W/ FINISH MATERIAL & ALL CONNECTIONS ARE VISUAL - ONE VISIT

C. NOTIFY ARCHITECT AT LEAST 24 HOURS BEFORE EACH SITE OBSERVATION IS REQUIRED TO ALLOW TIME FOR ARRANGEMENTS TO BE MADE WITH ENGINEER FOR SITE OBSERVATION.

NOTE: THESE STRUCTURAL OBSERVATIONS ARE THE REQUIREMENTS OF THE STRUCTURAL ENGINEER AND DOES NOT INCLUDE OR WAIVE THE RESPONSIBILITY FOR THE SPECIAL INSPECTIONS REQUIRED BY CHAPTER 17 OF THE 2012 INTERNATIONAL BUILDING CODE. SPECIAL INSPECTION SHALL BE PERFORMED BY THE SPECIAL INSPECTOR WHO SHALL BE HIRED BY OWNER TO MEET CHAPTER 17 OF IBC 2012.

SITE PREPARATION FOR SOIL SUPPORTED FOUNDATIONS:

THE FOUNDATION DESIGN IS BASED ON THE GEOTECHNICAL STUDY PREPARED BY GEOTECHNICAL CONSULTANTS, INC. PROJECT NO. 13116, DATED JUNE 5, 2013. THE GEOTECHNICAL REPORT SHALL CONTROL IN CASE OF CONFLICT WITH THESE NOTES.

UF-1 PROVIDE TEMPORARY PROVISION FOR DRAINAGE OF THE BUILDING PAD AREA DURING CONSTRUCTION AND PERMANENT DRAINAGE AWAY FROM BUILDING AFTER CONSTRUCTION.

UF-2 AT THE ENTIRE AREA OCCUPIED BY THE BUILDING (AND FOR A DISTANCE OF 5.0 FT. OUTSIDE OF THE BUILDING), REMOVE ALL VEGETATION AND SOILS WITH SIGNIFICANT AMOUNTS OF ORGANIC MATERIAL. DO NOT USE FOR UNDERFLOOR FILL. EXPOSED SUBGRADE SHALL BE RELATIVELY LEVEL.

UF-3 THE EXPOSED SUBGRADE SHALL BE SCARIFIED AT LEAST 8 INCHES AND COMPACTED BETWEEN OPTIMUM AND +4 PERCENTAGE POINTS OF THE OPTIMUM MOISTURE CONTENT. COMPACT THE SUBGRADE AT LEAST 95% OF THE MAXIMUM DRY DENSITY DETERMINED IN ACCORDANCE WITH ASTM D698.

UF-4 BRING THE BUILDING PAD TO UNDERSIDE OF SLAB WITH SELECT STRUCTURAL FILL AS SPECIFIED ON NOTE UF-5. COMPACT THE SELECT MATERIAL TO AT LEAST 95% OF THE MAXIMUM DRY DENSITY AS DETERMINED BY ASTM D698. MAINTAIN COMPACTIVE LIFT THICKNESS TO 6 INCHES OR LESS AND MOISTURE CONTENT BETWEEN -2 AND +2 PERCENTAGE POINTS OF THE OPTIMUM MOISTURE CONTENT.

UF-5 SELECT FILL MATERIALS. ALL SELECT FILL SOILS SHOULD HAVE A PLASTICITY INDEX (PI) OF LESS THAN 12 AND LIQUID LIMIT OF 30. FILL MATERIAL SHALL BE APPROVED BY THE GEOTECHING ENGINEER. THE SELECT FILL MATERIALS SHOULD BE FREE OF ORGANIC MATERIAL AND DEBRIS, AND SHOULD NOT CONTAIN STONES LARGER THAN (3) INCHES IN MAXIMUM DIMENSION.

UF-6 PERFORM ALL EARTHWORK DESCRIBED ABOVE BEFORE TRENCHING FOR GRADE BEAMS OR MECHANICAL LINES.

UF-7 EXCAVATE BEAM TRENCHES TO MEET PLANNED DIMENSIONS. PRIOR TO PLACEMENT OF CONCRETE, HAND COMPACT BOTTOM OF BEAM TRENCHES TO AT LEAST 95% OF THE MAXIMUM DRY DENSITY DETERMINED USING ASTM D698. STANDING WATER SHOULD NOT BE PERMITTED IN THE BEAM TRENCHES AFTER FINAL COMPACTION AND BEFORE PLACEMENT OF CONCRETE. REMOVE ALL LOOSE MATERIALS AND UNSUITABLE SOILS DUE TO RAINFALL OR BY DESICCATION.

UF-8 PLACE 15 MIL "STEGO WRAP" OR REVIEWED EQUIVALENT ON TOP OF SELECT FILL SMOOTH SUBGRADE TO PREVENT PROTRUSIONS THAT MAY CAUSE DAMAGE OR RUPTURE FILM. LAY FILM ON SUBGRADE INCLUDING BEAM AND FOOTING SOFFITS AND SIDES OF BEAMS AND FOOTINGS USING WIDEST PRACTICAL WIDTHS. LAP EDGES OF FILM 6" WITH TOP LAP PLACED IN DIRECTION OF CONCRETE FLOW AND TAPE ALL JOINTS. CUT FILM AROUND PIPES AND ROUGH-INS AND SEAL CUTS WITH PRESSURE SENSITIVE TAPE.

UF-9 AT AREA OUTSIDE BUILDING LINE, SLOPE TOP SURFACE OF FILL TO MATCH FINISH GRADE SLOPE AND HOLD DOWN A MINIMUM OF 10 INCHES BELOW FINISH FLOOR LINE.

UF-10 EMPLOY AN INDEPENDENT TESTING LABORATORY TO TAKE 3 (THREE) DENSITY TESTS FOR SUBGRADE (NOTE UF-3) & EACH LIFT OF SELECT FILL (NOTE UF-4).

UF-11 SOIL BEARING CAPACITY - 2500 PSF FOR TOTAL LOAD.

UF-12 WHEN SOLID ROCK IS ENCOUNTERED AT BEAM TRENCHES, THE DEPTH OF THE GRADE BEAM MAY BE REDUCED TO TOP OF SOLID ROCK BUT NOT LESS THAN 18" DEEP. PROVIDE MIN. 6" COMPACTED STRUCTURAL FILL UNDER BEAM.

UF-13 IF THE DECISION IS MADE TO USE GRANULAR MATERIALS IN THE UTILITY TRENCHES, WE RECOMMEND THAT MEASURES BE TAKEN TO PROHIBIT TRANSMITTING WATER UNDER THE BUILDING PAD. THIS CAN BE ACCOMPLISHED BY CONSTRUCTING A FULL DEPTH PLUG OF CLAY SOIL IN THE TRENCH. THE PLUG SHOULD BE LOCATED OUTSIDE THE BUILDING PAD AND TWO (2) FOOT OVERBUILD. THE THICKNESS OF THE PLUG SHOULD BE AT LEAST TWO (2) FEET. THE CLAY SHOULD HAVE A PI OF 20 TO 40 AND SHOULD BE MOISTURE CONDITIONED TO BETWEEN PLUS TWO (+2) TO PLUS SIX (+6) PERCENTAGE POINTS OF OPTIMUM AND COMPACTED TO 8 INCH MAXIMUM LIFTS TO AT LEAST 95 PERCENT OF ASTM D698 MAXIMUM DENSITY. A SHEET OF 10 MIL VISQUEEN MAY BE USED IN CONJUNCTION WITH THE CLAY TO HELP FORM A MORE WATER TIGHT PLUG.

UF-14 BUILDING PAD DETAIL:

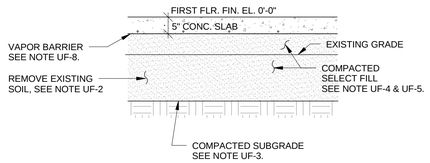

DESIGN LOADS:

DL-1 DEAD LOADS INCLUDE THE WEIGHT OF CONSTRUCTION MATERIALS INCORPORATED INTO THE BUILDING, INCLUDING BUT NOT LIMITED TO WALLS, FLOORS, ROOFS, CEILINGS, STAIRWAYS, BUILT-IN PARTITIONS, FINISHES, CLADDING AND OTHER SIMILARLY INCORPORATED ARCHITECTURAL AND STRUCTURAL ITEMS, AND FIXED SERVICE EQUIPMENT. ALL DEAD LOADS ARE CONSIDERED PERMANENT LOADS. MINIMUM ROOF DEAD LOAD IS 20 PSF OR ACTUAL LOAD WHICHEVER IS LARGER.

DL-2 DEAD LOADS FOR MECHANICAL UNITS ARE BASED ON THE WEIGHTS OF EQUIPMENT, AS INDICATED ON THE STRUCTURAL DRAWINGS (INCLUDING THE WEIGHT OF CONCRETE PADS, WHERE INDICATED). ANY CHANGES IN TYPE, SIZE, LOCATION OR NUMBER OF PIECES OF EQUIPMENT SHOULD BE REPORTED TO THE ARCHITECT FOR VERIFICATION OF THE ADEQUACY OF SUPPORTING MEMBERS PRIOR TO THE PLACEMENT OF SUCH EQUIPMENT.

DL-3 UNIFORM DESIGN LIVE LOADING IS AS FOLLOWS:
- o ROOF .....20 PSF
- o FIRST FLOOR.....100 PSF

DL-4 ROOF LIVE LOADS MAY BE REDUCED.

DL-5 SNOW LOAD:
- o GROUND SNOW LOAD, Pg.....5 PSF

DL-6 WIND LOADS:
- o RISK CATEGORY.....III
- o ULTIMATE DESIGN WIND SPEED, Vult.....120 MPH
- o ALLOWABLE DESIGN WIND SPEED, Vasd.....90 MPH
- o EXPOSURE CATEGORY.....“B”
- o INTERNAL PRESSURE COEFFICIENT..... +/- 0.18 , 0.55, 0.00
- o FOR COMPONENTS AND CLADDING GROSS WIND PRESSURE, SEE SHEET S1.03.

DL-7 EARTHQUAKE DESIGN DATA:
- o SEISMIC IMPORTANCE FACTOR Ie.....1.0
- o RISK CATEGORY.....III
- o MAPPED SPECTRAL RESPONSE ACCELERATIONS:
  - Ss.....0.13g
  - S1.....0.03g
- o SITE CLASS "C"
- o SPECTRAL RESPONSE COEFFICIENTS
  - Sds.....0.13g
  - Sd1.....0.04g
- o SEISMIC DESIGN CATEGORY "A"
- o BASIC SEISMIC FORCE RESISTING SYSTEM - STRUCTURAL STEEL SYSTEM NOT SPECIFICALLY DETAILED FOR SEISMIC RESISTANCE
- o DESIGN BASE SHEAR, V = N/A
- o SEISMIC RESPONSE COEFFICIENT, Cs = N/A
- o SEISMIC MODIFICATION FACTOR, R = N/A
- o ANALYSIS PROCEDURE - N/A

DL-8 UNLESS SPECIFICALLY NOTED, THERE ARE NO PROVISIONS FOR FUTURE FLOORS, ROOFS OR OTHER LOADS.

CONCRETE AND CONCRETE REINFORCEMENT:

CN-1 STRUCTURAL CONCRETE SHALL BE IN ACCORDANCE WITH THE CODE APPLICABLE EDITION OF "BUILDING CODE REQUIREMENTS FOR STRUCTURAL CONCRETE (ACI 318)", THE AMERICAN CONCRETE INSTITUTE.

CN-2 ALL CONCRETE REINFORCEMENT SHALL BE NEW DOMESTIC DEFORMED BILLET STEEL, CONFORMING TO ASTM A 615, GRADE 60, EXCEPT WELDABLE REBARS ASTM A706, GR. 60, WELDED WIRE FABRIC SHALL COMFORM TO ASTM A185, GRADE 70"

CN-3 DETAIL REINFORCING BARS AND PROVIDE BAR SUPPORTS AND SPACERS IN ACCORDANCE WITH ACI 315.

CN-4 ALL REINFORCING SHALL BE PROPERLY CHAIRED AND TIED PER ACI 315 (SP66) AND CRSI (PLACING REINFORCING BARS) PRIOR TO PLACING CONCRETE.

CN-5 PLACEMENT OF ALL REINFORCING STEEL SHALL BE OBSERVED BY THE ENGINEER PRIOR TO CONCRETE PLACEMENT UNLESS APPROVED OTHERWISE.

CN-6 ALL CONCRETE SHALL BE NORMAL WEIGHT STONE AGGREGATE CONCRETE UNLESS NOTED OTHERWISE. AGGREGATE SHALL MEET ASTM C33 REQUIREMENTS, AND SHALL BE 3/4" TO 1 1/2" NOMINAL AGGREGATE SIZE. PROVIDE WATER REDUCING ADMIXTURES AS REQUIRED TO IMPROVE WORKABILITY. MAX. SLUMP SHALL NOT EXCEED 5 INCHES EXCEPT AT PIERS, 6" TO 8". PLASTIC CONCRETE TEMPERATURE SHALL NOT EXCEED 90 DEGREES PRIOR TO PLACEMENT. ALL CONCRETE SHALL BE CURED FOR A MINIMUM OF 7 DAYS USING MOIST CURING PROCEDURES, OR CURING COMPOUNDS WHICH WILL NOT INTERFERE WITH THE BONDING OF FINISH TILE FLOORS. MAXIMUM AMOUNT OF FLY ASH SHALL NOT EXCEED 25% OF CEMENT BY WEIGHT. MINIMUM CONCRETE COMPRESSIVE STRENGTH WHEN TESTED AT 28 DAYS SHALL BE AS FOLLOWS:

o SLAB-ON-GRADE ..... 3,000 PSI

CN-7 PROVIDE A SET OF FIVE CYLINDERS IN ACCORDANCE WITH ASTM C 31 TO BE TAKEN BY AN INDEPENDENT TESTING LAB AT THE FOLLOWING FREQUENCY FOR EACH CLASS OF CONCRETE:
A. ONCE EACH DAY A GIVEN CLASS IS PLACED, NOR LESS THAN
B. ONCE FOR EACH 150 YD^3 OF EACH CLASS PLACED EACH DAY, NOR LESS THAN
C. ONCE FOR EACH 5,000 FT^2 OF SLAB OR WALL SURFACE AREA PLACED EACH DAY.
REPORT COMPRESSION TEST RESULTS TO THE ENGINEER WITHIN 24 HOURS.

CN-8 NO SUBSEQUENT CONSTRUCTION WILL BE ALLOWED UNTIL CONCRETE HAS CURED A MINIMUM OF 7 DAYS AT A TEMPERATURE OF 50°F OR ABOVE.

CN-9 PORTLAND CEMENT SHALL CONFORM TO ASTM - C150, TYPE II.

CN-10 NO WELDING OF REINFORCING BARS OR TORCHING TO BEND REINFORCING BARS SHALL BE ALLOWED WITHOUT THE SPECIFIC APPROVAL OF THE STRUCTURAL ENGINEER.

CN-11 CONCRETE COVER SHOULD BE AS FOLLOWS:

A. FOOTINGS AND OTHER PRINCIPAL STRUCTURAL MEMBERS IN WHICH CONCRETE IS CAST AGAINST AND PERMANENTLY EXPOSED TO EARTH - 3 INCHES.

B. WHERE CONCRETE SURFACES, AFTER REMOVAL OF FORMS, ARE EXPOSED TO WEATHER OR EARTH:

- o BARS 3/4" AND LARGER IN DIAMETER.....2 INCHES
- o BARS SMALLER THAN 5/8" IN DIAMETER.....1 1/2 INCHES

C. WHERE SURFACES ARE NOT DIRECTLY EXPOSED TO WEATHER OR EARTH:

- o SLAB ON GRADE (FROM TOP OF SLAB).....1 1/2 INCHES
- o SLABS, WALLS, JOISTS
  - No. 14 AND No. 18 BARS.....1 1/2 INCHES
  - No. 11 BARS AND SMALLER.....3/4 INCHES
- o BEAMS, COLUMNS
  - PRIMARY REINF., TIES, STIRRUPS, SPIRALS.....1 1/2 INCHES

CN-12 MECHANICAL AND ELECTRICAL CONDUIT IN BEAMS SHALL RUN UNDER TOP LAYER OF REINFORCEMENT OR WIRE MESH. PROVIDE A MINIMUM OF 1 1/2" CLEAR BETWEEN CONDUIT AND PARALLEL REINFORCING. DO NOT "BUNDLE" CONDUITS. CONDUITS SHALL BE PLACED BELOW SLAB REINFORCEMENT.

CN-13 SET AND BUILD INTO FORM WORK ANCHORAGE DEVICES AND OTHER EMBEDDED ITEMS REQUIRED FOR OTHER WORK THAT IS ATTACHED TO OR SUPPORTED BY CAST-IN-PLACE CONCRETE. REBAR PROJECTING FROM CONCRETE SHALL BE SECURED IN PLACE PRIOR TO PLACING CONCRETE.

PRE-ENGINEERED SUPERSTRUCTURE:

PE-1 THE CONTRACTOR SHALL VERIFY ALL DIMENSIONS AND SITE CONDITIONS PRIOR TO DESIGN, FABRICATION OR ERECTION OF PRE-ENGINEERED BUILDING.

PE-2 ENGINEER OF RECORD (E.O.R.) DISCLAIMS ANY RESPONSIBILITY FOR THE DESIGN OF PRE-ENGINEERED METAL BUILDING. PRE-ENGINEERED METAL BUILDING SHALL BE DESIGNED AND SEALED BY A REGISTERED ENGINEER LICENSED IN THE STATE OF TEXAS AND HAVING THREE (3) OR MORE YEARS EXPERIENCE IN THE DESIGN OF THE TYPE OF BUILDING INDICATED ON THE CONTRACT DOCUMENTS.

PE-3 THE METAL BUILDING AND COMPONENTS SHALL COMPLY WITH LOCAL CODES MINIMUM, REQUIREMENTS SHALL BE AS FOLLOWS:
- BUILDING DRIFT
  - WITH METAL SIDING.....H/180
  - WITH MASONRY VENEER.....H/300
- GIRT DEFLECTION
  - METAL SIDING.....L/180
  - MASONRY VENEER.....L/600

PE-4 THE METAL BUILDING AND COMPONENTS SHALL BE DESIGNED TO CARRY THEIR OWN WEIGHT PLUS ALL SUPERIMPOSED DEAD AND LIVE LOADS INCLUDING WIND LOADS FROM ALL DIRECTIONS AND INCLUDING ALL MECHANICAL, ELECTRICAL AND ARCHITECTURAL LOADS. VERIFY ALL LOADS WITH MECHANICAL, ELECTRICAL AND ARCHITECTURAL PLANS. MIN. COLLATERAL LOADS SHALL BE 12 PSF.

PE-5 DESIGN AND MEMBERS FOR ALL FRAMED OPENINGS SHALL BE PROVIDED AS PART OF THE METAL BUILDING DESIGN. PROVIDE ADDITIONAL FRAMING NOTED AS P/E MEMBERS ON PLAN DETAILS

PE-6 THE CONTRACTOR SHALL PROVIDE (E.O.R.) WITH DOCUMENTATION INDICATING DESIGN LOADS, DESIGN ASSUMPTIONS, INTENT AND CRITERIA USED PRIOR TO FABRICATION OF METAL BUILDING AND COMPONENTS.

PE-7 QUANTITIES AND DIAMETER OF THE ANCHOR RODS FOR THE CONNECTION OF THE PRE-ENGINEERED BUILDING FRAMES AND END WALL COLUMNS TO THE FOUNDATION SHALL BE FURNISHED BY THE PRE ENGINEERED METAL BUILDING'S ENGINEER. SEE DETAIL S/S4.00 FOR REQUIRED EMBEDMENT AND HOOK INTO THE FOUNDATION. THE CONTRACTOR SHALL COORDINATE THE CONNECTION OF THE BUILDING FRAME WITH THE SUPPLIER AND (E.O.R.) PRIOR TO CONSTRUCTION.

PE-8 THIS FOUNDATION HAS BEEN DESIGNED USING THE SCHEDULED ESTIMATED REACTIONS FROM THE PRE-ENGINEERED BUILDING COMPONENTS AND IS FOR BID PURPOSE ONLY. THE CONTRACTOR SHALL SUBMIT BASE CONNECTION DETAILS AND REACTIONS OF THE BUILDING FRAMES TO (E.O.R.) PRIOR TO CONSTRUCTION SO THE DESIGN ASSUMPTIONS AND FOUNDATION CONNECTIONS CAN BE VERIFIED. ALL COLUMNS SHALL BE DESIGNED WITH PINNED BASES. FOUNDATION HAS NOT BEEN DESIGNED TO RESIST ANY APPLIED MOMENT.

PE-9 ANY ADDITIONAL COST OF FOUNDATION WORK REQUIRED BY REVISIONS OF THE FOUNDATION DESIGN AFTER PRE-ENGINEERED BUILDING REACTIONS AND DETAILS ARE SUBMITTED SHALL NOT BE THE RESPONSIBILITY OF (E.O.R.) AND SHALL BE INCLUDED IN CONTRACTOR'S BID.

PE-10 THE EXTERIOR OR INTERIOR WALLS SHALL NOT BE USED AS BRACING BY THE METAL BUILDING. THIS APPLIES TO MAIN FORCE RESISTANCE SYSTEMS AS WELL AS MEMBERS SUPPORTING COMPONENTS.

PE-11 REFER TO THE ARCHITECTURAL/STRUCTURAL PLANS FOR MAXIMUM SIZES OF COLUMNS, AND LOCATIONS OF SPECIAL STRAIGHT LEG COLUMNS. ALL COLUMNS SHALL BE DESIGNED TO FIT IN FURROUTS AS DETAILED ON ARCH'L. DRAWINGS. INCREASE THICKNESS OF PLATES IF REQUIRED BY DESIGN.

PE-12 AS PART OF THIS CONTRACT THE PRE-ENGINEERED BUILDING MANUFACTURER SHALL OBSERVE ALL FINAL FRAMING PRIOR TO COVERING THE STRUCTURE WITH FINISHES AND PROVIDE A FINAL LETTER OF COMPLIANCE FOR THE SUPERSTRUCTURE.

PE-13 METAL BUILDING SHOP DRAWINGS SHALL USE GRID DESIGNATIONS ESTABLISHED ON THE CONTRACT DOCUMENTS.

Alpha Consulting Engineers F-1010

ALPHA Consulting Engineers, Inc.
STRUCTURAL ENGINEERS
13300 OLD BLANCO RD, SUITE 326 SAN ANTONIO, TEXAS 78216
TEL: (210) 227-3647
www.alphaconsultingengineers.com

STATE OF TEXAS
SCOTT S. TAK
52345
LICENSED
PROFESSIONAL ENGINEER
10/23/13

DEBRA J. DOCKERY, ARCHITECT, P.C.
118 BROADWAY, SUITE 516
SAN ANTONIO, TX 78205
PHONE (210) 225-6130
FAX (210) 225-7588

CITY OF SAN ANTONIO SOLID WASTE MANAGEMENT DEPARTMENT
CULEBRA HHW AND BULKY WASTE FACILITY
7030 CULEBRA ROAD
SAN ANTONIO, TEXAS 78227

REVISIONS

PROJECT NO. 132257

PHASE CONSTRUCTION DOCUMENTS

DATE OCTOBER 2013

DESCRIPTION STRUCTURAL NOTES

S1.00

STRUCTURAL NOTES

FASTENING SCHEDULE:

CONNECTION	FASTENING [a,m]	LOCATION
1. Joist to sill or girder	3 - 8d common (2 1/2"x0.131") 3 - 3"x0.131" nails 3 - 3" 14 gage staples	toenail
2. Bridging to joist	2 - 8d common (2 1/2"x0.131") 2 - 3"x0.131" nails 2 - 3" 14 gage staples	toenail each end
3. 1"x6" Subfloor or less to each joist	2 - 8d common (2 1/2"x0.131")	face nail
4. Wider than 1"x6" subfloor to each joist	3 - 8d common (2 1/2"x0.131")	face nail
5. 2" Subfloor to joist or girder	2 - 16d common (3 1/2"x0.162")	blind and face nail
6. Sole plate to joist or blocking	16d (3 1/2" x 0.135") at 16"o.c. 3" x 0.131" nails at 8"o.c. 3" 14 gage staples at 12"o.c.	typical face nail
Sole plate to joist or blocking at braced wall panel	3" - 16d (3 1/2"x0.135") at 16"o.c. 4 - 3"x0.131" nails at 16" 4 - 3" 14"gage staples per 16"	braced wall panels
7. Top plate to stud	2 - 16d common (3 1/2"x0.162") 3 - 3" x0.131" nails 3 - 3" 14 gage staples	end nail
8. Stud to sole plate	4 - 8d common (2 1/2"x0.131") 4 - 3"x0.131" nails 3 - 3" 14 gage staples	toe nail
	2 - 16d (3 1/2"x0.162") 3 - 3"x0.131" nails 3 - 3" 14 gage staples	end nail
9. Double Studs	16d (3 1/2" x 0.135") at 24"o.c. 3" x 0.131" nails at 8"o.c. 3" 14 gage staples at 8"o.c.	face nail
10. Double top plates	16d (3 1/2"x0.135") at 16"o.c. 3"x0.131" nails at 12" o.c. 3" 14 gage staples at 12"o.c.	typical face nail
Double top plates	8 - 16d common (3 1/2"x0.162") 12 - 3" x0.131" nails 12 - 3" 14 gage staples	lap splice
11. Blocking between joists or rafters to top plate	3 - 8d common (2 1/2"x0.131") 3 - 3" x0.131" nails 3 - 3" 14 gage staples	toenail
12. Rim joist to top plate	8d (2 1/2"x0.131") at 6"o.c. 3"x0.131" nails at 6"o.c. 3" 14 gage staples at 6"o.c.	toenail
13. Top plates, laps and intersections	2 - 16d common (3 1/2"x0.162") 3 - 3" x0.131" nails 3 - 3" 14 gage staples	face nail
14. Continuous header, two pieces	16d common (3 1/2"x0.162")	16"o.c. along edge
15. Ceiling joists to plate	3 - 8d common (2 1/2"x0.131") 5 - 3" x0.131" nails 5 - 3" 14 gage staples	toenail
16. Continuous header to stud	4 - 8d common (2 1/2"x0.131")	toenail
17. Ceiling joists, laps over partitions	3 - 16d common (3 1/2"x0.162") minimum, 4 - 3"x0.131" nails 4 - 3" 14 gage staples	face nail
18. Ceiling joists to parallel rafters	3 - 16d common (3 1/2"x0.162") minimum, 4 - 3"x0.131" nails 4 - 3" 14 gage staples	face nail
19. Rafter to plate	3 - 8d common (2 1/2"x0.131") 3 - 3"x0.131" nails 3 - 3" 14 gage staples	toenail
20. 1" Diagonal brace to each stud and plate	2 - 8d common (2 1/2"x0.131") 2 - 3"x0.131" nails 3 - 3" 14 gage staples	face nail
21. 1"x8" Sheathing to each bearing	3 - 8d common (2 1/2"x0.131")	face nail
22. Wider than1"x8"sheathing to each bearing	3 - 8d common (2 1/2"x0.131")	face nail
23. Built-up corner studs	16d common (3 1/2"x0.162") 3" x0.131" nails 3" 14 gage staples	24"o.c. 16"o.c. 16"o.c.

FASTENING SCHEDULE: (CONT.)

CONNECTION	FASTENING [a,m]	LOCATION
24. Built-up girder and beams	20d common (4"x0.192") 32"o.c. 3"x0.131" nails at 24"o.c. 3" 14 gage staples at 24"o.c.	face nail at top and bottom staggered on opposite sides
	2 - 20d common (4"x0.192") 3 - 3"x0.131" nails 3 - 3" 14 gage staples	face nail at ends and at each splice
25. 2" Planks	16d common (3 1/2"x0.162")	at each bearing
26. Collar tie to rafter	3 - 10d common (3"x0.148") 4 - 3"x0.131" nails 4 - 3" 14 gage staples	face nail
27. Jack rafter to hip	3 - 10d common(3"x0.148") 4 - 3"x0.131" nails 4 - 3" 14 gage staples	toenail
	2 - 16d common (3 1/2"x0.162") 3 - 3" x0.131" nails 3 - 3" 14 gage staples	face nail
28. Roof rafter to 2-by ridge beam	2 - 16d common (3 1/2"x0.162") 3 - 3" x0.131" nails 3 - 3" 14 gage staples	toenail
	2 - 16d common (3 1/2"x0.162") 3 - 3" x0.131" nails 3 - 3" 14 gage staples	face nail
29. Joist to band joist	3 - 16d common (3 1/2"x0.162") 4 - 3" x0.131" nails 4 - 3" 14 gage staples	face nail
30. Ledger strip	3 - 16d common (3 1/2"x0.162") 4 - 3" x0.131" nails 4 - 3" 14 gage staples	face nail
31. Wood structural panels and particleboard Subfloor, roof and wall sheathing (to framing)	1/2" and less 19/32" TO 3/4" 7/8" TO 1" 1 1/8" TO 1 1/4" 3/4" and less 7/8" TO 1" 1 1/8" TO 1 1/4"	6d [c,1] 2 3/8"x0.113" nail [n] 1 3/4" 16 gage [o] 8d [a] or 6d [e] 2 3/8"x0.113" nail [p] 2" 16 gage [p] 8d [e] 10d [d] or 8d [d] 6d [e] 8d [d] 10d [d] or 8d [e]
Single floor (Combination subfloor-underlayment to framing)		
32. Panel siding (to framing)	1/2" and less 5/8"	6d [f] 8d [f]
33. Fiberboard sheathing [g]	1/2" 25/32"	No. 11 gage roofing nail [h] 6d common nail (2"x0.113") No. 16 gage staple [i] No. 11 gage roofing nail [h] 8d common nail (2 1/2"x0.131") No. 16 gage staple [i]
34. Interior paneling	1/4" 3/8"	4d [j] 6d [k]

For SI: 1 inch = 25.4 mm.

a. Common or box nails are permitted to be used except where otherwise stated.
b. Nails spaced at 6 inches on center at edges, 12 inches at intermediate supports except 6 inches at supports where spans are 48 inches or more. For nailing of wood structural panel and particleboard diaphragms and shear walls, refer to section 2305. Nails for wall sheathing are permitted to be common, box or casing.
c. Common or deformed shank (6d - 2"x0.113"; 8d - 2 1/2"x0.131"; 10d - 3"x0.148").
d. Common (6d - 2" x0.113"; 8d - 2 1/2"x0131"; 10d - 3"x0.148").
e. Deformed shank (6d - 2"x0.113"; 8d - 2 1/2"x0.131"; 10d - 3"x0.148").
f. Corrosion-resistant siding (6d - 1 7/8"x0.106"; 8d - 2 3/8"x0.128") or casing (6d - 2"x0.099"; 8d - 2 1/2"x0.113") nail.
g. Fasteners spaced 3 inches on center at exterior edges and 6 inches on center at intermediate supports, when used as structural sheathing. Spacing shall be 6 inches on center on the edges and 12 inches on center at intermediate supports for nonstructural applications.
h. Corrosion-resistant roofing nails with 7/16-inch-diameter head and 1 1/2-inch length for 1/2-inch sheathing and 1 3/4-inch length for 25/32-inch sheathing.
i. Corrosion-resistant staples with nominal 7/16-inch crown and 1 1/8-inch length for 1/2-inch sheathing and 1 1/2-inch length for 25/32-inch sheathing. Panel supports at 16 inches (20 inches if strength axis in the long direction of the panel, unless otherwise marked).
j. Casing (1 1/2"x0.080") or finish (1 1/2"x0.072") nails spaced 6 inches on panel edges, 12 inches at intermediate supports.
k. Panel supports at 24 inches. Casing or finish nails spaced 6 inches on panel edges, 12 inches at intermediate supports.
l. For roof sheathing applications, 8d nails (2 1/2"x0.113") are the minimum required for wood structural panels.
m. Staples shall have minimum crown width of 7/16 inch.
n. For roof sheathing applications, fasteners spaced 4 inches on center at edges, 8 inches at intermediate supports.
o. Fasteners spaced 4 inches on center at edges, 8 inches at intermediate supports for subfloor and wall sheathing and 3 inches on center at edges, 6 inches at intermediate supports for roof sheathing.
p. Fasteners spaced 4 inches on center at edges, 8 inches at intermediate supports.

TIMBER FRAMING:

TF-1 TIMBER FRAMING AND PLYWOOD SHEATHING SHALL CONFORM TO THE CODE APPLICABLE EDITIONS OF THE AMERICAN PLYWOOD ASSOCIATION (APA) PLYWOOD DESIGN SPECIFICATION, AND THE NATIONAL DESIGN SPECIFICATION FOR WOOD CONSTRUCTION WITH THE N.F.P.A. SUPPLEMENT.

TF-2 STUDS SHALL BE DOUBLED AT ALL ANGLES, CORNERS, BEAM SUPPORTS AND AROUND ALL OPENINGS. REFER DETAIL 1/S5.01.

TF-3 BEAMS MADE UP OF SEVERAL 2X PIECES SHALL HAVE NO SPLICES EXCEPT OVER SUPPORTS. NAIL BOARDS TOGETHER, REFER DETAIL 2/S5.01.

TF-4 ALL SILL PLATES SHALL BE #2 TREATED SOUTHERN PINE AND SHALL BE ATTACHED TO THE FOUNDATION WITH 1/2" DIAMETER BOLTS WITH A MINIMUM OF 7" EMBEDMENT INTO THE CONCRETE AT 4'-0"o.c. THERE SHALL BE A MINIMUM OF 2 BOLTS PER PIECE WITH ONE BOLT LOCATED WITHIN 12" OF EACH END OF EACH PIECE UNLESS NOTED OTHERWISE ON THE FRAMING PLANS OR DETAILS IF GREATER.

TF-5 PLACE SINGLE PLATE AT BOTTOM OF ALL STUD WALLS.

TF-6 NAILING AND THE ATTACHMENT OF ALL FRAMING MEMBERS SHALL BE AS SPECIFIED ON THE FASTENING SCHEDULE. COMMON WIRE NAILS OR SPIKES OR GALVANIZED BOX NAILS SHALL BE USED FOR ALL FRAMING UNLESS NOTED OTHERWISE.

TF-7 ALL EXTERIOR WALLS SHALL BE BRACED WITH 1/2" THICK PLYWOOD DIAPHRAGM FROM THE TOP PLATE TO THE BOTTOM PLATE.

TF-8 ALL TIMBER FRAMING (EXCEPT WALL STUDS) MEMBERS SHALL BE NO.2 SOUTHERN YELLOW PINE WITH 15% MAXIMUM MOISTURE UNLESS NOTED OTHERWISE. STUDS SHALL BE S-F-P, NO. 2 GRADE AND COLUMNS SHALL BE NO.2 DOUGLAS FIR-LARCH WITH 15% MAX. MOISTURE.

TF-9 ALL HEADERS AND BEAMS INCLUDING PARALLAM BEAMS SHALL BE LATERALLY SUPPORTED ON THEIR COMPRESSION EDGE AT INTERVALS OF 24"o.c. OR CLOSER.

TF-10 ALL EXTERIOR STUD WALLS SHALL BE 2x6 SPACED AT 16"o.c. ALL STUD WALLS SHALL BE CONTINUOUS AND HAVE SOLID BLOCKING AT MID-HEIGHT, BUT NOT TO EXCEED 6' VERTICALLY.

TF-11 SOLID 2x BLOCKING SHALL BE PROVIDED AT ENDS AND AT POINT OF SUPPORTS OF ALL WOOD JOISTS AND SHALL BE PLACED BETWEEN SUPPORTS IN ROWS NOT EXCEEDING 8'-0" APART.

TF-12 ROOF SHEATHING
PLYWOOD ROOF SHEATHING SHALL BE 3/4" THICK APA STRUCTURAL 1 32/16 RATED SHEATHING EXTERIOR WITH EXTERIOR GLUE. PLYWOOD SHEATHING EXPOSED AT OVERHANGS OR OTHERWISE PERMANENTLY EXPOSED TO WEATHER SHALL BE C-C EXT. - DFPA GRADE OR BETTER. INSTALL WITH LONG DIMENSION OF PANEL ACROSS SUPPORTS. SPACE PANEL ENDS AND PANEL EDGES 1/8" UNLESS OTHERWISE RECOMMENDED BY THE PANEL MANUFACTURER. SUITABLE EDGE SUPPORT SHALL BE PROVIDED IN ACCORDANCE WITH RECOMMENDATIONS OF THE AMERICAN PLYWOOD ASSOCIATION BY USE OF PLY CLIPS, TONGUE AND GROOVE PANELS, OR LUMBER BLOCKING BETWEEN JOIST. PANEL END JOINTS SHALL OCCUR OVER FRAMING. PLYWOOD ROOF SHEATHING SHALL BE ATTACHED TO SUPPORT FRAMING USING 8d NAILS. NAIL SPACING SHALL BE 6" ALONG PANEL EDGES AND 12" AT INTERMEDIATE SUPPORTS.

TF-13 USE THE FOLLOWING MINIMUM MEMBERS UNLESS NOTED OTHERWISE.
2x8 ROOF RAFTERS @ 24"o.c.
2x6 CEILING JOISTS @ 16"o.c.

TF-14 ALL WOOD IN CONTACT WITH STEEL, MASONRY CONCRETE, AND/OR GROUND SHALL BE PRESSURE PRESERVATIVE TREATED AND RATED FOR GROUND CONTACT.

TF-15 UNLESS OTHERWISE SHOWN ON PLANS, WOOD LINTELS OVER OPENINGS SHALL BE DOUBLE 2x8 WITH 1/2" PLYWOOD HEADERS FOR SPANS UNDER 6'-0". FOR SPANS 6'-0" TO 8'-0", WOOD LINTELS SHALL BE DOUBLE 2x12 WITH 1/2" PLYWOOD HEADERS.

TF-16 ALL FRAMING MEMBERS FRAMING INTO THE SIDE OF A HEADER AND WALL SHALL BE ATTACHED WITH METAL HANGERS.

PREFABRICATED WOOD ROOF TRUSSES:

WT-1 PREFABRICATED WOOD TRUSSES SHALL BE DESIGNED BY A REGISTERED PROFESSIONAL ENGINEER, LICENSED IN TEXAS, IN ACCORDANCE WITH THE DESIGN SPECIFICATION FOR LIGHT METAL PLATE CONNECTED WOOD TRUSSES, CODE APPLICABLE TPI EDITION FOR THE TRUSS PLATE INSTITUTE.

WT-2 TRUSS MEMBERS AND CONNECTIONS SHALL BE PROPORTIONED, WITH A MAXIMUM ALLOWABLE STRESS INCREASE FOR LOAD DURATION OF 25 PERCENT, TO WITHSTAND THE FOLLOWING SUPERIMPOSED LOADS. LOADS SHOWN DO NOT INCLUDE TRUSS SELF WEIGHT.

DEAD LOAD.....5 P.S.F.
(INCLUDING TRUSS OWN WEIGHT & METAL ROOF)
APPLIED TO TOP CHORD OF TRUSS
.....10 P.S.F.
APPLIED TO BOTTOM CHORD OF TRUSS

LIVE LOAD.....20 P.S.F.
APPLIED TO TOP CHORD OF TRUSS
.....10 P.S.F.
APPLIED TO BOTTOM CHORD OF TRUSS (NOT ACTING SIMULTANEOUSLY WITH TOP CHORD LIVE LOADS)
.....17 P.S.F.
NET UPLIFT APPLIED TO TOP CHORD OF TRUSS

WT-3 THE TRUSS MANUFACTURER SHALL SUBMIT THE FOLLOWING CERTIFICATIONS, SEALED BY THE ENGINEER RESPONSIBLE FOR DESIGN, FOR THE ARCHITECTS APPROVAL PRIOR TO FABRICATION OF ANY MATERIALS:

A. CERTIFICATION THAT THE MANUFACTURER IS LICENSED TO FABRICATE TRUSSES UTILIZING THE CONNECTOR SYSTEM PROPOSED.

B. CERTIFICATION THAT THE TRUSSES ARE DESIGNED TO MEET THE LOAD CRITERIA SPECIFIED HEREIN.

WT-4 FABRICATION AND INSTALLATION DRAWINGS SHALL BE SUBMITTED TO THE CONTRACTOR FOR APPROVAL OF SIZE, SHAPE, TEMPORARY BRACING AND LAYOUT PRIOR TO FABRICATION OF MATERIALS.

WT-5 TOP CHORDS SHALL BE DESIGNED TO RESIST BENDING INDUCED BY THE ROOF DEAD LOAD AND LIVE LOAD.

WT-6 DEFLECTIONS DUE TO LIVE LOAD SHALL BE LIMITED TO L/360.

WT-7 CONNECT ROOF TRUSSES TO THE BEARING WALL OR SUPPORT BEAM AT EACH END WITH SIMPSON'S H2.5 CONNECTOR OR FRAMING ANCHOR TO BE SPECIFIED AFTER TRUSS SHOP DRAWING SUBMITTAL. CONTRACTOR SHOULD INCLUDE **$200** ALLOWANCE FOR MATERIALS AND INCLUDE ALL LABOR IN HIS BID.

WT-8 PROVIDE LONGITUDINAL WOOD DIAGONAL BRACES TO TRUSSED RAFTER RIDGES AT 20'-0" o.c. MAXIMUM. TRUSSED RAFTER CONNECTIONS SHALL HAVE A MINIMUM OF 2 - 16D NAILS UNTIL PERMANENT ROOF SHEATHING IS APPLIED. SEE DETAIL 5/S5.01.

WT-9 PROVIDE BOTTOM CHORD BRACING AS SHOWN ON DETAIL 6/S5.01 AS TRUSSES ARE SET IN PLACE. BOTTOM CHORD BRACING TO BE LEFT IN PLACE AFTER ERECTION IS COMPLETED EXCEPT SOLID SHEATHING IS ATTACHED DIRECTLY TO BOTTOM OF TRUSS TO ACT AS BRACING.

WT-10 CARE SHALL BE TAKEN DURING THE DELIVERY AND INSTALLATION OF THE TRUSSES TO PREVENT EXCESSIVE LATERAL BENDING AND POSSIBLE JOINT DAMAGE. TRUSSES SHALL BE HANDLED, INSTALLED, AND BRACED IN ACCORDANCE WITH TRUSS PLATE INSTITUTE HIB-91 COMMENTARY AND RECOMMENDATIONS FOR HANDLING INSTALLING AND BRACING METAL PLATE CONNECTED WOOD TRUSSES. DESIGN FOR TRUSS BRACING SHALL BE IN ACCORDANCE WITH TRUSS PLATE INSTITUTE DSB-89 RECOMMENDED DESIGN SPECIFICATION FOR TEMPORARY BRACING OF METAL PLATE CONNECTED WOOD TRUSSES. ALL DAMAGED TRUSSES SHALL BE REPLACED. ONLY REPAIRS AUTHORIZED BY THE TRUSS MANUFACTURER'S ENGINEER WILL BE ALLOWED.

WT-11 ALL TRUSSES SHALL BE INSTALLED PLUMB, SQUARE AND PROPERLY ALIGNED AT THE SPECIFIED SPACING. BRACING SHALL BE PROVIDED BOTH DURING ERECTION AND AFTER PERMANENT INSTALLATION HAS BEEN COMPLETED. GABLE END OR FIRST TRUSS BRACING, LATERAL BRACING, CROSS BRACING AND DIAGONAL BRACING CAN BE USED TO PROVIDE TEMPORARY AND/OR PERMANENT BRACING.

SPECIAL INSPECTIONS

SPECIAL INSPECTIONS NOTES:

SP-1 SPECIAL INSPECTION WORK IS NOT INCLUDED IN THE STRUCTURAL ENGINEER'S SCOPE OF SERVICES. THE OWNER WILL ENGAGE A TESTING AGENCY TO CONDUCT SPECIAL TESTS AND INSPECTIONS REQUIRED BY AUTHORITIES HAVING JURISDICTION AS THE RESPONSIBILITY OF THE OWNER. ALL INSPECTION REPORTS SHALL BE COPIED TO THE STRUCTURAL ENGINEER, AND A FINAL LETTER OF COMPLIANCE SHALL BE PROVIDED BY THE REGISTERED DESIGN PROFESSIONAL IN RESPONSIBLE CHARGE (TYPICALLY ARCHITECT) TO THE OWNER OR BUILDING AUTHORITY.

SPECIAL INSPECTION SHALL INCLUDE:

- o SITE PREPARATION
- o PIER FOUNDATION
- o CONCRETE
- o WOOD (NOT USED)
- o WELDING OF STRUCTURAL STEEL
- o STEEL ELEMENTS OF COMPOSITE CONSTRUCTION (NOT REQUIRED)
- o BOLTING OF STRUCTURAL STEEL
- o STEEL CONSTRUCTION OTHER THAN STRUCTURAL STEEL
- o MASONRY I (NOT REQUIRED)
- o MASONRY II (NOT REQUIRED)

SP-2 INSPECTOR QUALIFICATIONS: QUALIFICATIONS LISTED IN THE TESTING & INSPECTION REQUIREMENTS TABLES ARE RECOMMENDATIONS OF THE LOCAL MEMBERS OF THE TEXAS COUNCIL OF ENGINEERING LABORATORIES. IT IS ALSO RECOMMENDED THAT THE SPECIAL INSPECTORS SHOULD BE EMPLOYED BY AN AGENCY ACCREDITED BY ANY NATIONALLY RECOGNIZED ACCREDITING BODY SUCH AS AASHTO, A2LA, NVLAP, ICC ETC.

SP-3 DEFINITIONS:
ACI - AMERICAN CONCRETE INSTITUTE
ADSC-IAFD - ADSC: THE INTERNATIONAL ASSOCIATION OF FOUNDATION DRILLING
AISC - AMERICAN INSTITUTE OF STEEL CONTRUCTION
ASNT - AMERICAN SOCIETY FOR NONDESTRUCTIVE TESTING
ASTM - AMERICAN SOCIETY FOR TESTING MATERIALS
AWS - AMERICAN WELDING SOCIETY
CWI - CERTIFIED WELDING INSPECTOR
CRSI - CONCRETE REINFORCING STEEL INSTITUTE
IBC - INTERNATIONAL BUILDING CODE
PCI - PRECAST/PRESTRESSED CONCRETE INSTITUTE
PTI - POST-TENSIONING INSTITUTE

SP-4 TESTING AND INSPECTION DIRECTED BY ASTM E329 GUIDELINES WHERE NOTED ON THE TESTING & INSPECTION REQUIREMENTS TABLES.

SP-5 THE SPECIAL INSPECTOR CANNOT BE AN EMPLOYEE OF THE CONTRACTOR.

SP-6 WHERE STRUCTURAL MEMBERS AND ASSEMBLIES ARE SHOP FABRICATED, THE SPECIAL INSPECTOR SHALL VERIFY THAT THE FABRICATOR MAINTAINS DETAILED FABRICATION AND QUALITY CONTROL PROCEDURES THAT PROVIDE A BASIS FOR INSPECTION CONTROL OF THE WORKMANSHIP AND THE FABRICATOR'S ABILITY TO CONFORM TO THE CONSTRUCTION DOCUMENTS AND REFERENCED STANDARDS, UNLESS THE FABRICATOR IS REGISTERED AND APPROVED TO PERFORM SUCH WORK WITHOUT SPECIAL INSPECTION. EXCEPTION: SPECIAL INSPECTIONS SHALL NOT BE REQUIRED WHERE THE WORK IS PERFORMED ON THE PREMISES OF A FABRICATOR THAT IS ENROLLED IN A NATIONALLY ACCEPTED INSPECTIONS PROGRAM ACCEPTABLE TO THE REGISTERED DESIGN PROFESSIONAL IN CHARGE. AT THE COMPLETION OF FABRICATION, THE APPROVED FABRICATOR SHALL SUBMIT A CERTIFICATE OF COMPLIANCE TO THE BUILDING OFFICIAL UPON REQUEST AND TO THE REGISTERED DESIGN PROFESSIONAL IN RESPONSIBLE CHARGE STATING THAT THE WORK WAS PERFORMED IN ACCORDANCE WITH THE APPROVED CONSTRUCTION DOCUMENTS.

TESTING AND INSPECTION REQUIREMENTS FOR SITE PREPARATION FOR SOIL SUPPORTED FOUNDATIONS (INCLUDING SPECIAL INSPECTIONS)

Required Verification and Inspection	Frequency of Verification and Inspection	IBC Section and Reference Standard	Inspector Qualifications
SITE PREPARATION FOR SOIL SUPPORTED FOUNDATIONS		IBC 1705.6	
1. Verify materials below shallow foundations are adequate to achieve the design bearing capacity.	Periodic	Geotechnical Report; Site Preparation for Soil Supported Foundation Notes on construction documents.	* Qualifications based on ASTM D3740
2. Verify excavations are extended to proper depth and have reached proper material.	Periodic		
3. Perform classification and testing of compacted fill materials.	Periodic		
4. Verify use of proper materials, densities and lift thicknesses during placment and compaction of compacted fill.	Continuous		
5. Prior to placement of compacted fill, oberserve subgrade and verify that site has been prepared properly.	Periodic		
6. Chemical Injection: Quality controlled testing and evaluation prior and subsequent to injection shall be performed by the Geotechnical Engineer to determine the effectiveness of the chemical injection process. The Geotechnical Engineer or his representative shall monitor the injection process to verify area coverage, injection depth and to review and monitor the swell test results.	Periodic		

TESTING AND INSPECTION REQUIREMENTS FOR PIER FOUNDATION CONSTRUCTION (INCLUDING SPECIAL INSPECTIONS)

Required Verification and Inspection	Frequency of Verification and Inspection	IBC Section and Reference Standard	Inspector Qualifications
PIER FOUNDATION CONSTRUCTION		IBC 1705.8	
1. Observe drilling operations and maintain complete and accuratre records for each element.	Continuous	Geotechnical Report; Drilled Pier Notes on construction documents and Specification Section 02466	Graduate Engineer * Qualifications based on ASTM E329 & ASTM C1077
2. Verify placement locations and plumbness, confirm element diameters, bell diameters (if applicable), lengths, embedment into bedrock (if applicable) and adequate end-bearing strata capacity. Record concrete or grout volumes.	Continuous	Drilled Pier Foundation Notes and associated details on construction documents and specification Section 02466	
3. For concrete elements, perform additional inspections in accordance with section 1705.3	---	IBC 1705.3; Concrete and Concrete Reinforcement Notes on construction documents and specification Section 03300	* Qualifications based on ASTM E329 & ASTM C1077

Alpha Consulting Engineers F-1010
ALPHA Consulting Engineers, Inc.
STRUCTURAL ENGINEERS
13300 OLD BLANCO RD, SUITE 326 SAN ANTONIO, TEXAS 78216
TEL: (210) 227-3647
www.alphaconsultingengineers.com
STATE OF TEXAS SCOTT S. TAK 52345 LICENSED PROFESSIONAL ENGINEER
10/23/13

DEBRA J. DOCKERY, ARCHITECT, P.C.
118 BROADWAY, SUITE 516
SAN ANTONIO, TX 78205
PHONE (210) 225-6130
FAX (210) 225-7538

CITY OF SAN ANTONIO SOLID WASTE MANAGEMENT DEPARTMENT
CULEBRA HHW AND BULKY WASTE FACILITY
7030 CULEBRA ROAD
SAN ANTONIO, TEXAS 78227

REVISIONS

PROJECT NO. 132257

PHASE CONSTRUCTION DOCUMENTS

DATE OCTOBER 2013

DESCRIPTION STRUCTURAL NOTES

S1.01

SPECIAL INSPECTIONS (CONT.)

TESTING AND INSPECTION REQUIREMENTS FOR CONCRETE CONSTRUCTION (INCLUDING SPECIAL INSPECTIONS)

Required Verification and Inspection CONCRETE CONSTRUCTION	Frequency of Verification and Inspection	IBC Section and Reference Standard IBC 1705.3	Inspector Qualifications
1. Inspection of reinforcing steel, including prestressing tendons and placement.	Periodic	IBC 1910.4; ACI 318: 3.5, 7.1-7.7; Concrete and Concrete Reinforcement Notes on construction documents and Specification Section 03300	* Qualifications based on ASTM E329
2. Inspection of reinforcing steel welding in accordance with IBC Table 1705.2.2, Item 2b.	Continuous	AWS D1.4; ACI 318: 3.5.2; Concrete and Concrete Reinforcement Notes on construction documents and Specification Section 03300	CWI or Associate CWI
3. Inspection of anchors cast in concrete prior to and during placement of concrete where allowable loads have been increased or where strength design is used.	Periodic	IBC 1908.5, 1909.1; ACI 318: 8.1.3, 21.2.8; Specification Section 03300	Technician trained in field of work and has at least one year of experience
4. Inspection of mechanical anchors installed in hardened concrete members.	Periodic	IBC 1909.1; ACI 318: 3.8.6, 8.1.3, 21.2.8; Specification Section 03300	Technician trained in field of work and has at least one year of experience
5. Inspection of adhesive anchors installed in hardened concrete. Special Inspector must be certified by ACI/CRSI "Adhesive Anchor Installer". A report must be submitted to the licensed design professional and building official documenting, stating how anchor was installed and the Manufacturer's Printed Installation Instructions per ACI 318-11 (D.9.2.2 and D.9.2.4)	Continuous	IBC 1909.1; ACI 318: Appendix D; Post-Installed Concrete/Masonry Anchor Notes on construction documents	Technician trained in field of work and has at least one year of experience
6. Verifying use of required design mix.	Periodic	IBC 1904.2., 1910.2 and 1910.3; ACI 318: Ch. 4, 5.2-5.4 Concrete and Concrete Reinforcement Notes on construction documents and Specification Section 03300	* Qualifications based on ASTM C1077
7. At the time fresh concrete is sampled to fabricate specimens for strength tests, perform slump and air content tests and determine the temperature of the concrete.	Continuous	IBC 1910.10; ASTM C 172, C31; ACI 318: 5.6, 5.8; Concrete and Concrete Reinforcement Notes on construction documents and Project Specification Section 03300	Qualifications based on ASTM C1077
8. Inspection of concrete and shotcrete placement for proper application techniques.	N/A	IBC 1910.6, 1910.7, 1910.8; ACI 318: 5.9, 5.10; Project specification Section 03300	* Qualifications based on ASTM C1077
9. Inspection for maintenance of specified curing temperature and techniques.	Periodic	IBC 1910.9; ACI 318: 5.11-5.13; Concrete and Concrete Reinforcement Notes on construction documents and Project Specification Section 03300	* Qualifications based on ASTM C1077
10. Inspection of prestressed concrete:			
a. Application of prestressing forces.	N/A	ACI 318: 18.20, 18.18.4; Post-Tensioned Notes on construction documents and project specifications	* Qualifications based on ASTM C1077
b. Grouting of bonded prestressing tendons in the seismic-force-resisting system.	N/A		
11. Erection of precast concrete members.	N/A	ACI 318: CH. 16; Structural Notes on conctruction documents and Project Specification Section 03300	
12. Verification of in-situ concrete strength, prior to stressing of tendons in post tensioned concrete and prior to removal of shores and forms from beams and structural slabs.	N/A	ACI 318: 6.2; Post-Tensioned Notes on construction documents and project specifications	* Qualifications based on ASTM C1077
13. Inspect formwork for shape, location and dimensions of the concrete member being formed.	N/A	ACI 318: 6.1.1; Details on construction documents and Project Specification Section 03300	

VERIFICATION AND SPECIAL INSPECTION OF STEEL CONSTRUCTION OTHER THAN STRUCTURAL STEEL (IBC TABLE 1705.2.2)

Required Verification and Inspection	Frequency of Verification and Inspection	IBC Section and Reference Standard IBC 1705.2	Inspector Qualifications
1. Material verification of cold-formed steel deck:			
a. Identification markings to conform to ASTM standards specified in the approved construction documents	Periodic	IBC 1705.2.2; Applicable ASTM Materials Standards; Structural Steel Notes on construction documents and specification section 05120	CWI/Associate/ Technical Graduate, AWS or CRSI
b. Manufacturer's certified test reports	Periodic		
2. Inspection of welding other than structural steel:			
a. Cold-formed steel deck:			CWI/Associate/ Technical Graduate, AWS or CRSI
1) Floor and roof deck welds	Periodic	AWS D1.3	
b. Reinforcing steel:		IBC 1705.2.2; AWS D1.4; ACI 318: Section 3.5.2; concrete and concrete reinforcement notes on construction documents and specification section 03300	
1) Verification of weldability of reinforcing steel other than ASTM A706	Periodic		
2) Reinforcing steel resisting flexural and axial forces in intermediate and special moment frames, and boundary elements of special structural walls of concrete and shear reinforcement	Continuous		
3. Shear reinforcement	Continuous		
4. Other reinforcement steel	Periodic		

VERIFICATION AND SPECIAL INSPECTION TASKS FOR WELDING OF STRUCTURAL STEEL[1] (AISC 360-10 TABLES C-N5.4-1, C-N5.4-2, C-N5.4-3)

Required Verification and Inspection WELDING OF STRUCTURAL STEEL	Frequency of Verification and Inspection	IBC Section and Reference Standard IBC 1705.2	Inspector Qualifications
1. Inspection tasks prior to welding:			
a. Welding procedure specifications (WPSs) available.	Continuous	IBC 1705.2.1; AISC 360-10 C-N5.4-1: AWS D1.1; Structural Steel Notes on construction documents and specification section 05120	CWI and ASNT or Licensed Engineer
b. Manufacturer certifications for welding consumables available.	Continuous		
c. Material identification (type/grade) [2]	Periodic		
d. Welder identification system [2]	Periodic		
e. Fit-up of groove weld (including joint geometry) [2] 1) Joint preparation. 2) Dimensions (alignment, root opening, root face, bevel) 3) Cleanliness (condition of steel surfaces) 4) Tacking (tack weld quality and location) 5) Backing type and fit (if applicable)	Periodic		
f. Configuration and finish of access holes. [2]	Periodic		
g. Fit-up of fillet welds [2] 1) Dimensions (alignment, gaps at root) 2) Cleanliness (condition of steel surfaces) 3) Tacking (tack weld quality and location) 4) Exposure control	Periodic		
2. Inspection tasks during welding:			
a. Use of qualified welders	Periodic	IBC 1705.2.1; AISC 360-10 C-N5.4-2: AWS D1.1; Structural Steel Notes on construction documents and specification section 05120	CWI and ASNT or Licensed Engineer
b. Control and handling of welding consumables [2] 1) Packaging 2) Exposure control	Periodic		
c. No welding over cracked tack welds [2]	Periodic		
d. Environmental conditions 1) Wind speed within limits 2) Precipitation and temperature	Periodic		
e. WPS followed [2] 1) Settings on weld equipment 2) Travel speed 3) Selected welding materials 4) Shielding gas type/flow rate 5) Preheat applied 6) Interpass temperature maintained (min./max.) 7) Proper position (F, V, H, OH)	Periodic		
f. Welding Techniques [2] 1) Interpass and final cleaning 2) Each pass within profile limitations 3) Each pass meets quality requirements.	Periodic		
3. Inspection tasks after welding:			
a. Welds cleaned	Periodic	IBC 1705.2.1; AISC 360-10 C-N5.4-2: AWS D1.1; Structural Steel Notes on construction documents and specification section 05120	CWI and ASNT or Licensed Engineer
b. Size, length and location of welds	Continuous		
c. Welds meet visual acceptance criteria 1) Crack Prohibition 2) Weld/base-metal fusion 3) Crater cross section 4) Weld profiles 5) Weld size 6) Undercut 7) Porosity	Continuous		
d. Arc strikes	Continuous		
e. k-area [3]	Continuous		
f. Backing removed and weld tabs removed (if required)	Continuous		
g. Repair activities	Continuous		
h. Document acceptance or rejection of welded joint or member	Continuous		

1. Inspection tasks noted in this table are the responsibility of the Special Inspector or Quality Assurance Inspector (QAI). The fabricator and erector are responsible for all inspection tasks indicated in AISC 360-10 Section N5 and assigned to the Quality Control Inspector (QCI)

2. Inspection tasks may be coordinated with the fabricator or erector's Quality Control Inspector (QCI) where indicated with this footnote. All other tasks shall be performed by the Special Inspector.

3. When welding of doubler plates, continuity plates or stiffeners has been performed in the k-area, visually inspect the web k-area for cracks within 3 in. (75 mm) of the weld.

VERIFICATION AND SPECIAL INSPECTION TASKS FOR BOLTING STRUCTURAL STEEL[1] (AISC 360-10 TABLES C-N5.6-1, C-N5.6-2, C-N5.6-3)

Required Verification and Inspection BOLTING STRUCTURAL STEEL	Frequency of Verification and Inspection	IBC Section and Reference Standard IBC 1705.2	Inspector Qualifications
1. Inspection tasks prior to bolting:			
a. Manufacturer's certifications available for fastener materials	Periodic	IBC 1705.2.1; AISC 360-10 C-N5.6-1: Structural Steel Notes on construction documents and specification section 05120	CWI/Associate/ Technical Graduate, AWS or CRSI
b. Fasteners marked in accordance with ASTM requirements	Periodic		
c. Proper fasteners selected for the joint detail (grade, type, bolt length if threads are to be excluded from shear plane) [1]	Periodic		
d. Proper bolting procedure selected for joint detail [2]	Periodic		
e. Connecting elements, including the appropriate faying surface condition and hole preparation, if specified, meet applicable requirements.	Periodic		
f. Pre-installation verification testing by installation personnel observed and documented for fastener assemblies and methods used	Continuous		
g. Proper storage provided for bolts, nuts, washers and other fastener components	Periodic		
2. Inspection tasks during bolting:			
a. Fastener assemblies, of suitable condition, placed in all holes and washers (if required) are positioned as required [2]	Periodic	IBC 1705.2.1; AISC 360-10 C-N5.6-2: Structural Steel Notes on construction documents and specification section 05120	CWI/Associate/ Technical Graduate, AWS or CRSI
b. Joint brought to the snug-tight condition prior to the pretensioning operation [2]	Periodic		
c. Fastener component not turned by the wrench prevented from rotating. [2]	Periodic		
d. Fasteners are pretensioned in accordance with the RCSC Specification, progressing systematically from the most rigid point toward the free edges	Periodic		
3. Inspection tasks after bolting:			
a. Document acceptance or rejection of bolted connections	Continuous	AISC 360-10 C-N5.6-3	CWI/Associate/ Technical Graduate, AWS or CRSI

1. Inspection tasks noted in this table are the responsibility of the Special Inspector or Quality Assurance Inspector (QAI). The fabricator and erector are responsible for all inspection tasks indicated in AISC 360-10 Section N5 and assigned to the Quality Control Inspector (QCI)

2. Inspection tasks may be coordinated with the fabricator or erector's Quality Control Inspector (QCI) where indicated with this footnote. All other tasks shall be performed by the Special Inspector.

Alpha Consulting Engineers F-1010

ALPHA Consulting Engineers, Inc.
STRUCTURAL ENGINEERS
13300 OLD BLANCO RD, SUITE 326 SAN ANTONIO, TEXAS 78216
TEL: (210) 227-3647
www.alphaconsultingengineers.com

STATE OF TEXAS
SCOTT S. TAK
52345
LICENSED
PROFESSIONAL ENGINEER
10/23/13

DEBRA J. DOCKERY, ARCHITECT, P.C.
118 BROADWAY, SUITE 516
SAN ANTONIO, TX 78205
PHONE (210) 225-6130
FAX (210) 225-7588

CITY OF SAN ANTONIO SOLID WASTE MANAGEMENT DEPARTMENT
CULEBRA HHW AND BULKY WASTE FACILITY
7030 CULEBRA ROAD
SAN ANTONIO, TEXAS 78227

REVISIONS

PROJECT NO. 132257

PHASE CONSTRUCTION DOCUMENTS

DATE OCTOBER 2013

DESCRIPTION SPECIAL INSPECTIONS

S1.02

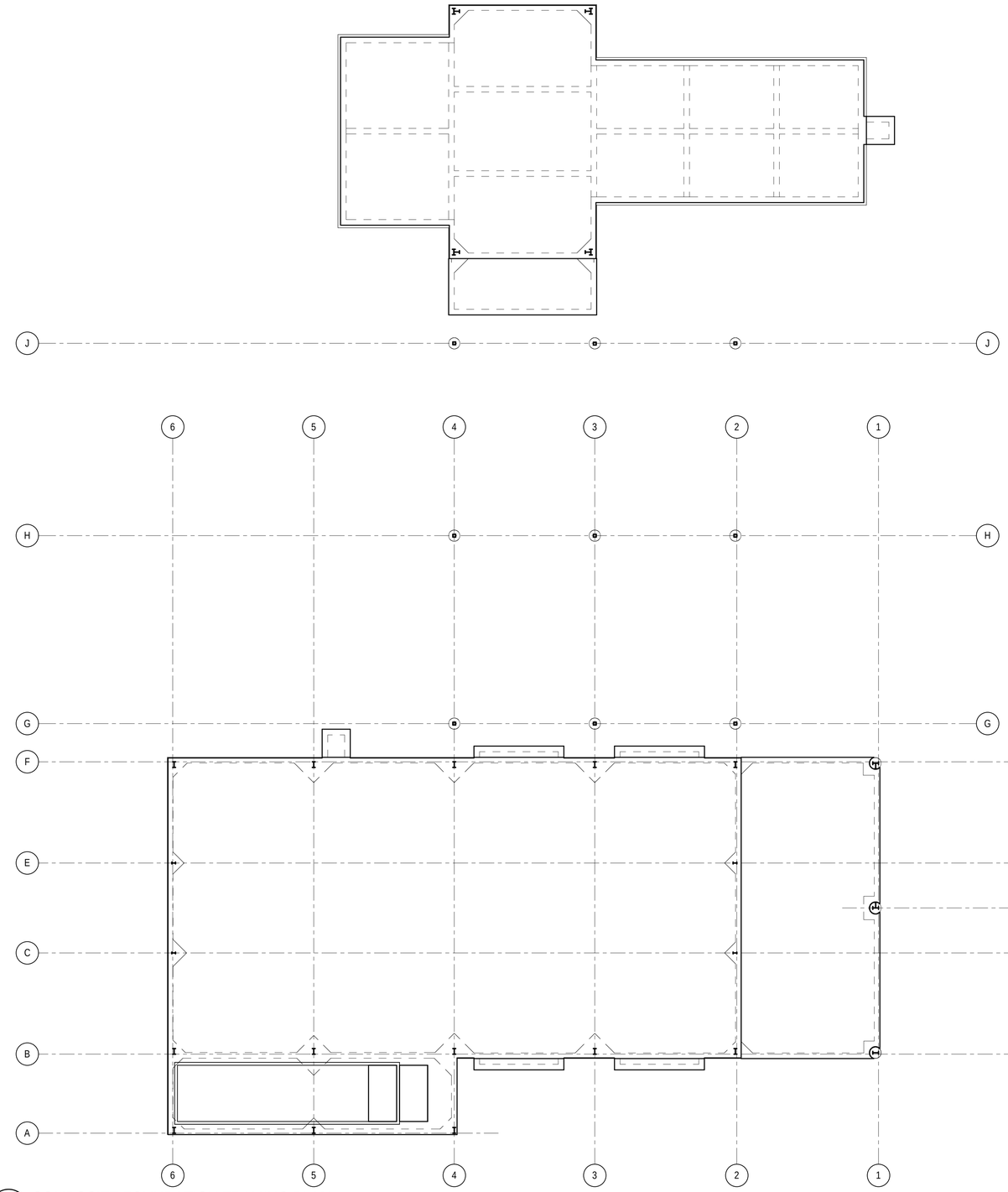

1 COMPOSITE FOUNDATION FRAMING PLAN

SCALE : 3/32" = 1'-0"

PLAN NORTH / TRUE NORTH

CONCRETE GRADE BEAM SCHEDULE

CONCRETE			REINFORCING	REMARKS
MK	"W"	"D" MIN.		
B1	12	36	2 - # 7 TOP AND BOTTOM , # 3 STIRRUPS @ 18"o.c	TYP. EXT. BEAM (U.N.O.)
B2	12	30	2 - # 6 TOP AND BOTTOM , # 3 STIRRUPS @ 18"o.c.	TYP. INT. BEAM (U.N.O.)

NOTES:
EXTERIOR SCHEDULED CONCRETE BEAM DEPTHS ARE MINIMUM. INCREASE EXTERIOR DEPTH TO MAINTAIN A MINIMUM OF 24" BELOW FINAL EXTERIOR GRADE.

ADD #3@12"o.c. EA. FACE AND #3 STIRRUPS @ 12"o.c. WHEN BEAM DEPTH BECOMES DEEPER THAN 42" DUE TO LOWER FINAL GRADE (TYPICAL).

PROVIDE 40 BAR DIAMETER LAPS AT ALL SPLICES IN CONTINUOUS TOP AND BOTTOM BARS AT GRADE BEAMS.

FOOTING SCHEDULE

TYPE	" a "	REINFORCING
F1	2'-6"	4 - # 5 E.W.
F2	3'-0"	4 - # 5 E.W.
F3	3'-6"	5 - # 5 E.W.
F4	4'-0"	5 - # 5 E.W.
F5	4'-6"	6 - # 5 E.W.
F6	5'-0"	6 - # 5 E.W.
F7	5'-6"	7 - # 5 E.W.
F8	6'-0"	7 - # 5 E.W.

LEGEND

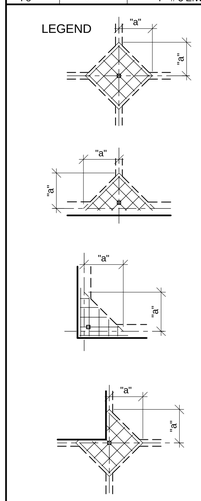

NOTES:
1. FOOTING DEPTH SHALL BE SAME DEPTH AS DEEPEST INTERSECTING BEAM.
2. "a" IS TO CENTERLINE OF BEAMS (TYP.)

FOUNDATION PLAN NOTES:

1. REF. ARCH'L/MEP FOR FLOOR DRAINS AND SLAB SLOPES TO DRAINS.
2. REF. DETAIL 1/S4.00 FOR TYPICAL CORNER BARS.
3. "SC" - DENOTES SAW CUT JOINT , SEE TYPICAL DETAIL 4/S4.00.
4. REFER TO DETAIL 3/S4.00 FOR TYPICAL GRADE BEAM AND REINFORCING REQUIREMENTS AT PLUMBING PENETRATIONS THROUGH GRADE BEAMS.
5. SEE SHEET S2.00 FOR CONCRETE BEAM SCHEDULE.
6. REF. ARCH'L FOR TOOLED JOINTS AT ALL EXTERIOR SLAB.
7. COLUMN REACTIONS FROM PRE-ENGINEERED BUILDING HAVE BEEN ASSUMED. PRIOR TO CONSTRUCTION OF FOUNDATION , SUBMIT REACTIONS SO FOUNDATION DESIGN CAN BE VERIFIED.
8. VERIFY COLUMN LOCATIONS W/ APPROVED METAL BUILDING SHOP DRAWINGS PRIOR TO FOUNDATION CONSTRUCTION.

LEGEND:

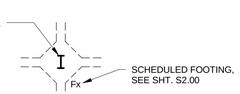

Alpha Consulting Engineers F-1010

ALPHA Consulting Engineers, Inc.
STRUCTURAL ENGINEERS
13300 OLD BLANCO RD, SUITE 326 SAN ANTONIO, TEXAS 78216
TEL: (210) 227-3647
www.alphaconsultingengineers.com

STATE OF TEXAS
SCOTT S. TAK
52345
LICENSED PROFESSIONAL ENGINEER
10/23/13

DEBRA J. DOCKERY, ARCHITECT, P.C.
118 BROADWAY , SUITE 516
SAN ANTONIO, TX 78205
PHONE (210) 225-6130
FAX (210) 225-7588

CITY OF SAN ANTONIO SOLID WASTE MANAGEMENT DEPARTMENT
CULEBRA HHW AND BULKY WASTE FACILITY
7030 CULEBRA ROAD
SAN ANTONIO, TEXAS 78227

REVISIONS

PROJECT NO. 132257

PHASE CONSTRUCTION DOCUMENTS

DATE OCTOBER 2013

DESCRIPTION COMPOSITE FOUNDATION FRAMING PLAN

S2.00

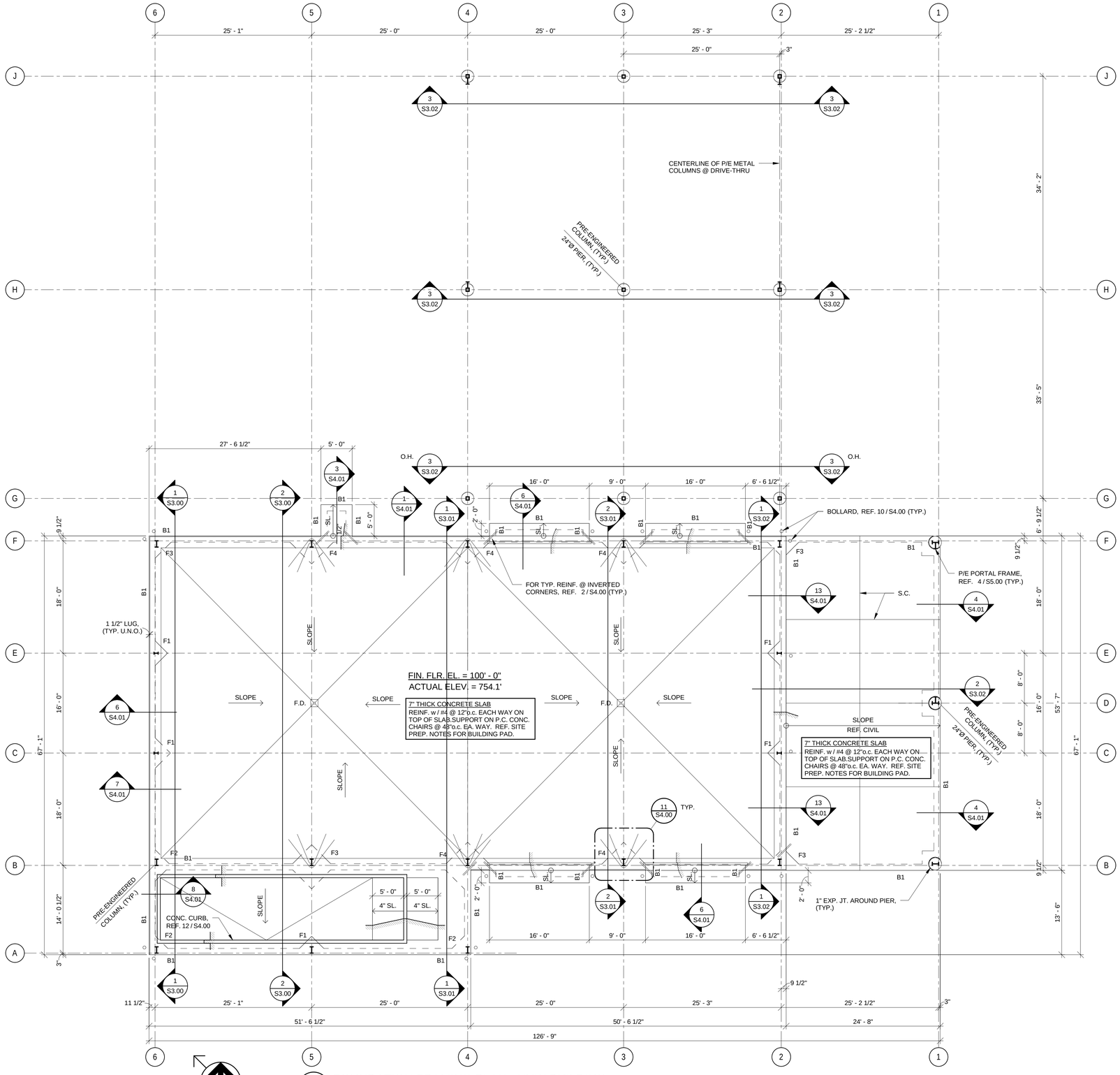

1 FOUNDATION FRAMING PLAN - HHW BUILDING

SCALE : 1/8" = 1'-0"

REFER TO SHEET S2.00 FOR FOUNDATION FRAMING PLAN NOTES

DEBRA J. DOCKERY, ARCHITECT, P.C.
118 BROADWAY , SUITE 516
SAN ANTONIO, TX 78205
PHONE (210) 225-6130
FAX (210) 225-7588

CITY OF SAN ANTONIO SOLID WASTE MANAGEMENT DEPARTMENT
CULEBRA HHW AND BULKY WASTE FACILITY
7030 CULEBRA ROAD
SAN ANTONIO, TEXAS 78227

ALPHA Consulting Engineers, Inc.
STRUCTURAL ENGINEERS
13300 OLD BLANCO RD, SUITE 326 SAN ANTONIO, TEXAS 78216
TEL: (210) 227-3647
www.alphaconsultingengineers.com
Alpha Consulting Engineers F-1010
STATE OF TEXAS — SCOTT S. TAK — 52345 — LICENSED PROFESSIONAL ENGINEER
10/23/13

REVISIONS

PROJECT NO. 132257

PHASE CONSTRUCTION DOCUMENTS

DATE OCTOBER 2013

DESCRIPTION FOUNDATION FRAMING PLAN - HHW BUILDING

S2.01

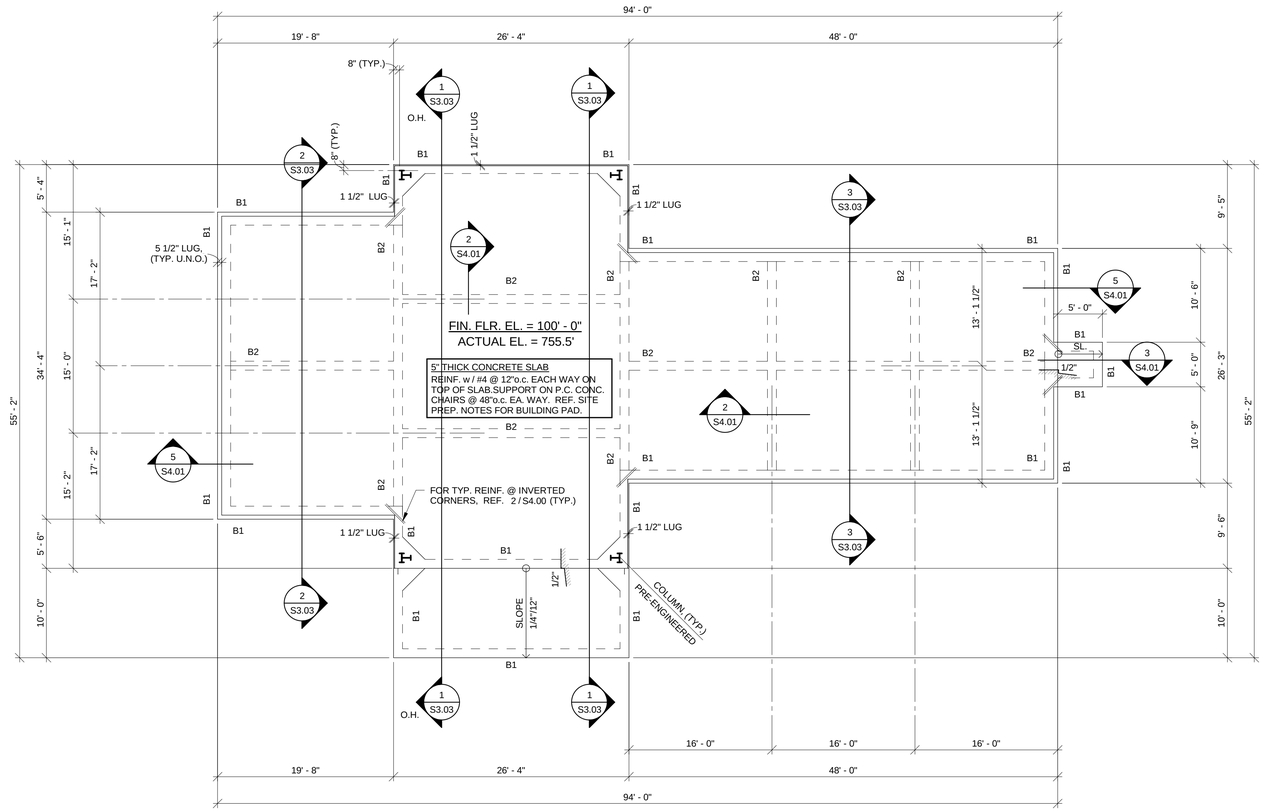

1 FOUNDATION FRAMING PLAN - CREWS QUARTERS

SCALE : 1/8" = 1'-0"

REFER TO SHEET S2.00 FOR FOUNDATION FRAMING PLAN NOTES

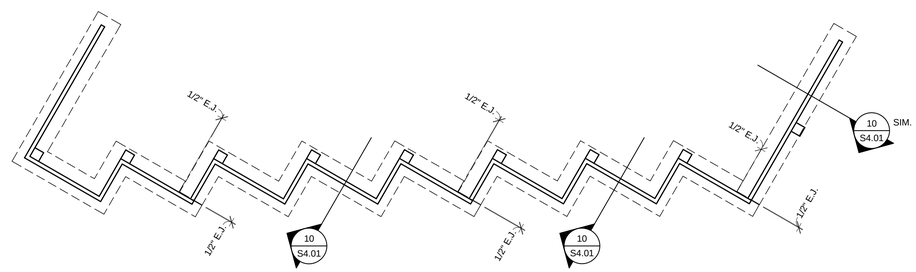

2 RETAINING WALL FRAMING PLAN

SCALE : 3/64" = 1'-0"

Alpha Consulting Engineers F-1010

ALPHA Consulting Engineers, Inc.
STRUCTURAL ENGINEERS
13300 OLD BLANCO RD, SUITE 326 SAN ANTONIO, TEXAS 78216
TEL: (210) 227-3647
www.alphaconsultingengineers.com

STATE OF TEXAS
SCOTT S. TAK
52345
LICENSED
PROFESSIONAL ENGINEER
10/23/13

DEBRA J. DOCKERY, ARCHITECT, P.C.
118 BROADWAY , SUITE 516
SAN ANTONIO, TX 78205
PHONE (210) 225-6130
FAX (210) 225-7588

CITY OF SAN ANTONIO SOLID WASTE MANAGEMENT DEPARTMENT
CULEBRA HHW AND BULKY WASTE FACILITY
7030 CULEBRA ROAD
SAN ANTONIO, TEXAS 78227

REVISIONS

PROJECT NO. 132257

PHASE CONSTRUCTION DOCUMENTS

DATE OCTOBER 2013

DESCRIPTION FOUNDATION FRAMING PLAN - CREWS QUARTERS

S2.02

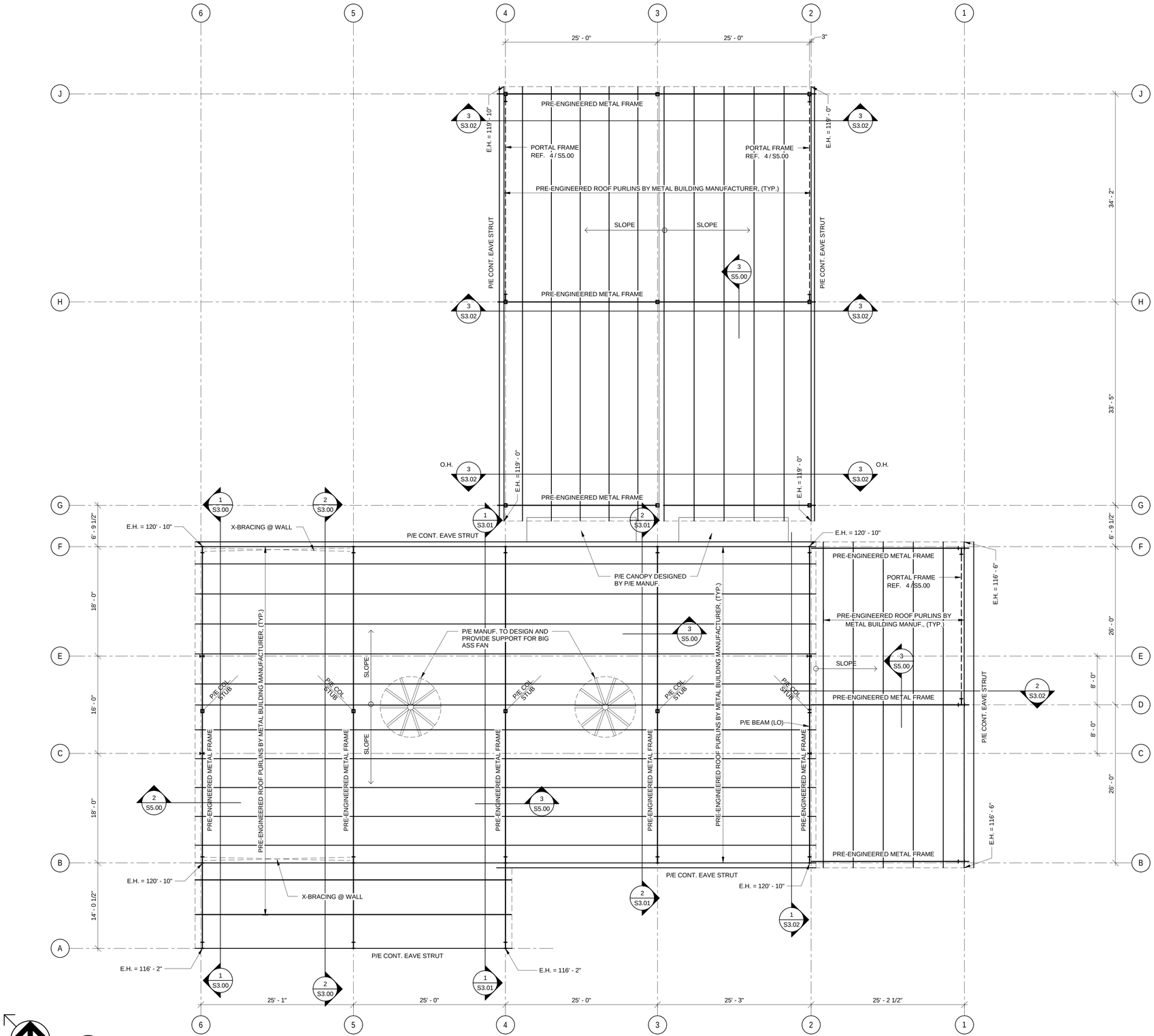

1 ROOF FRAMING PLAN - HHW BUILDING

SCALE : 1/8" = 1'-0"

ROOF PLAN NOTES:

1. VERIFY COLUMN LOCATIONS W/ APPROVED METAL BUILDING SHOP DRAWINGS PRIOR TO FOUNDATION CONSTRUCTION.
2. THIS PLAN SHOWS MINIMUM FRAMING REQUIRED. PRE-ENGINEERED BUILDING DESIGNER/SUPPLIER SHALL VERIFY ALL REQUIREMENTS W/ ARCHITECTURAL DRAWINGS AND PROVIDE ALL FRAMING AS REQUIRED TO MEET LOCAL BUILDING CODES.

Alpha Consulting Engineers F-1010

ALPHA Consulting Engineers, Inc.
STRUCTURAL ENGINEERS
13300 OLD BLANCO RD, SUITE 326 SAN ANTONIO, TEXAS 78216
TEL: (210) 227-3647
www.alphaconsultingengineers.com

STATE OF TEXAS
SCOTT S. TAK
52345
LICENSED
PROFESSIONAL ENGINEER
10/23/13

DEBRA J. DOCKERY, ARCHITECT, P.C.
118 BROADWAY, SUITE 516
SAN ANTONIO, TX 78205
PHONE (210) 225-6130
FAX (210) 225-7588

CITY OF SAN ANTONIO SOLID WASTE MANAGEMENT DEPARTMENT
CULEBRA HHW AND BULKY WASTE FACILITY
7030 CULEBRA ROAD
SAN ANTONIO, TEXAS 78227

REVISIONS

PROJECT NO. 132257

PHASE CONSTRUCTION DOCUMENTS

DATE OCTOBER 2013

DESCRIPTION ROOF FRAMING PLAN - HHW BUILDING

S2.03

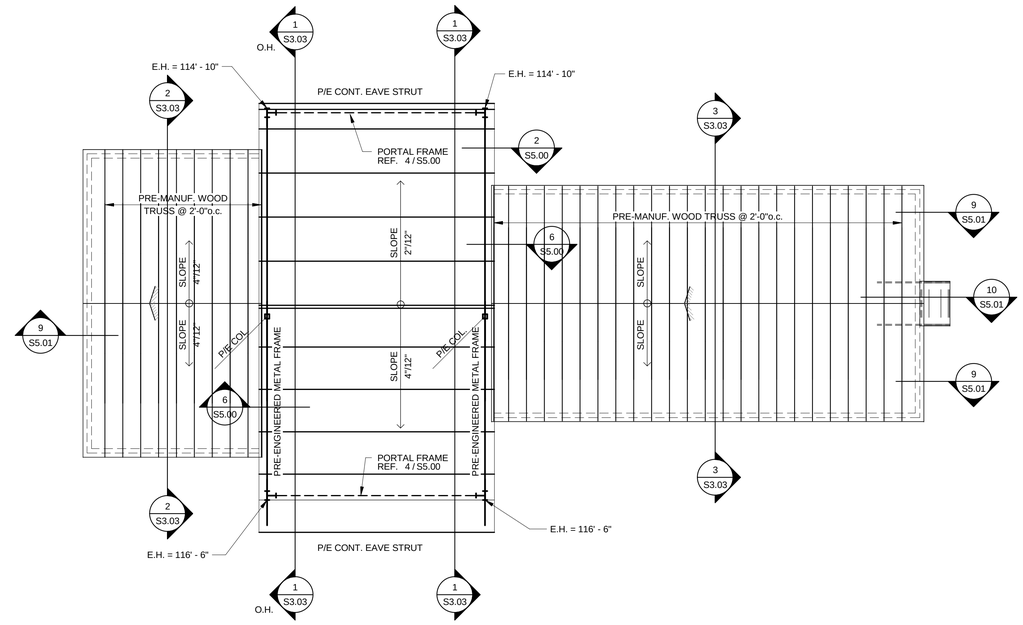

1 ROOF FRAMING PLAN - CREWS QUARTERS

SCALE : 1/8" = 1'-0"

REFER TO SHEET S2.03 FOR ROOF FRAMING PLAN NOTES.

Alpha Consulting Engineers F-1010

ALPHA
Consulting Engineers, Inc.
STRUCTURAL ENGINEERS
13300 OLD BLANCO RD. SUITE 326 SAN ANTONIO, TEXAS 78216
TEL: (210) 227-3647
www.alphaconsultingengineers.com

STATE OF TEXAS
SCOTT S. TAK
52345
LICENSED
PROFESSIONAL ENGINEER
10/23/13

DEBRA J. DOCKERY, ARCHITECT, P.C.
118 BROADWAY . SUITE 516
SAN ANTONIO, TX 78205
PHONE (210) 225-6130
FAX (210) 225-7588

CITY OF SAN ANTONIO SOLID WASTE MANAGEMENT DEPARTMENT
CULEBRA HHW AND BULKY WASTE FACILITY
7030 CULEBRA ROAD
SAN ANTONIO, TEXAS 78227

REVISIONS

PROJECT NO.
132257

PHASE
CONSTRUCTION DOCUMENTS

DATE
OCTOBER 2013

DESCRIPTION
ROOF FRAMING PLAN - CREWS QUARTERS

S2.04

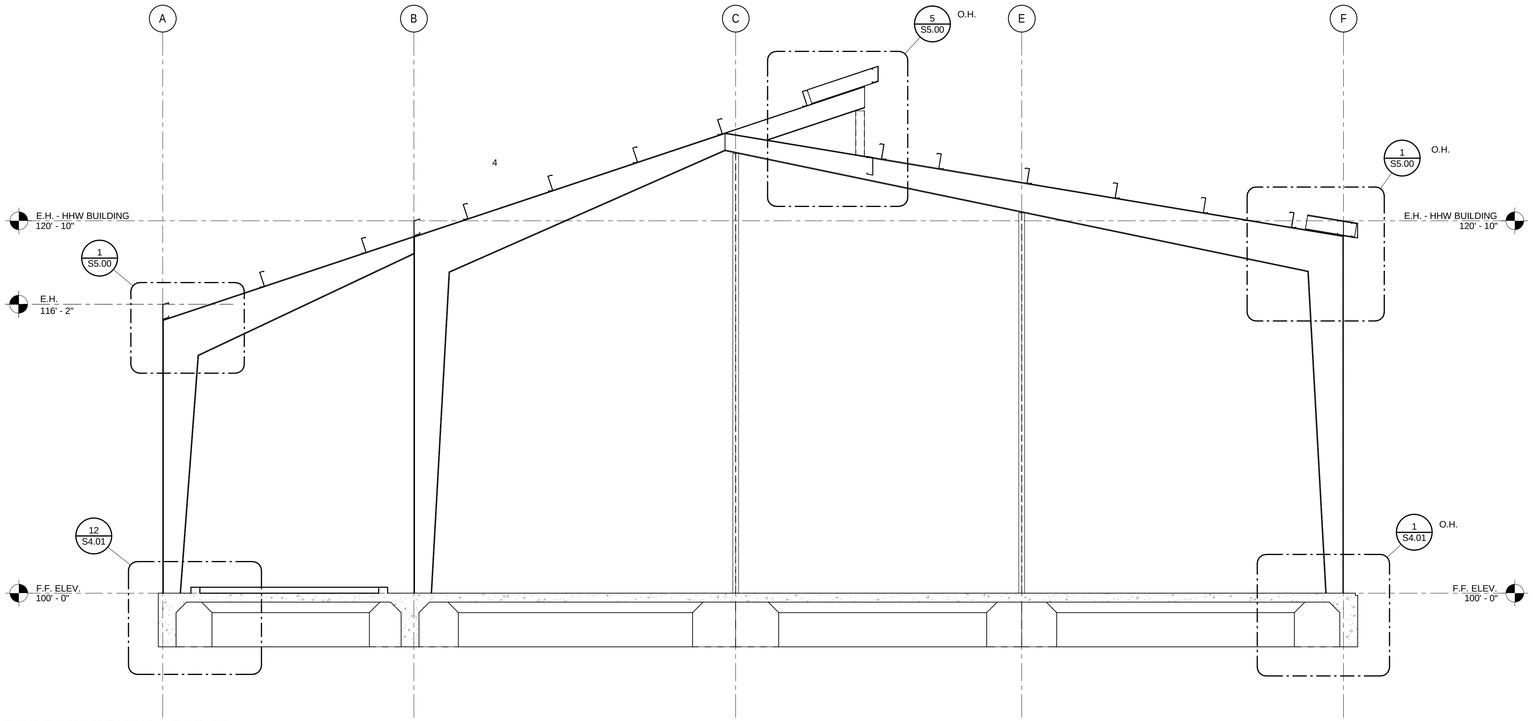

1 BUILDING CROSS-SECTION

SCALE : 1/4" = 1'-0"

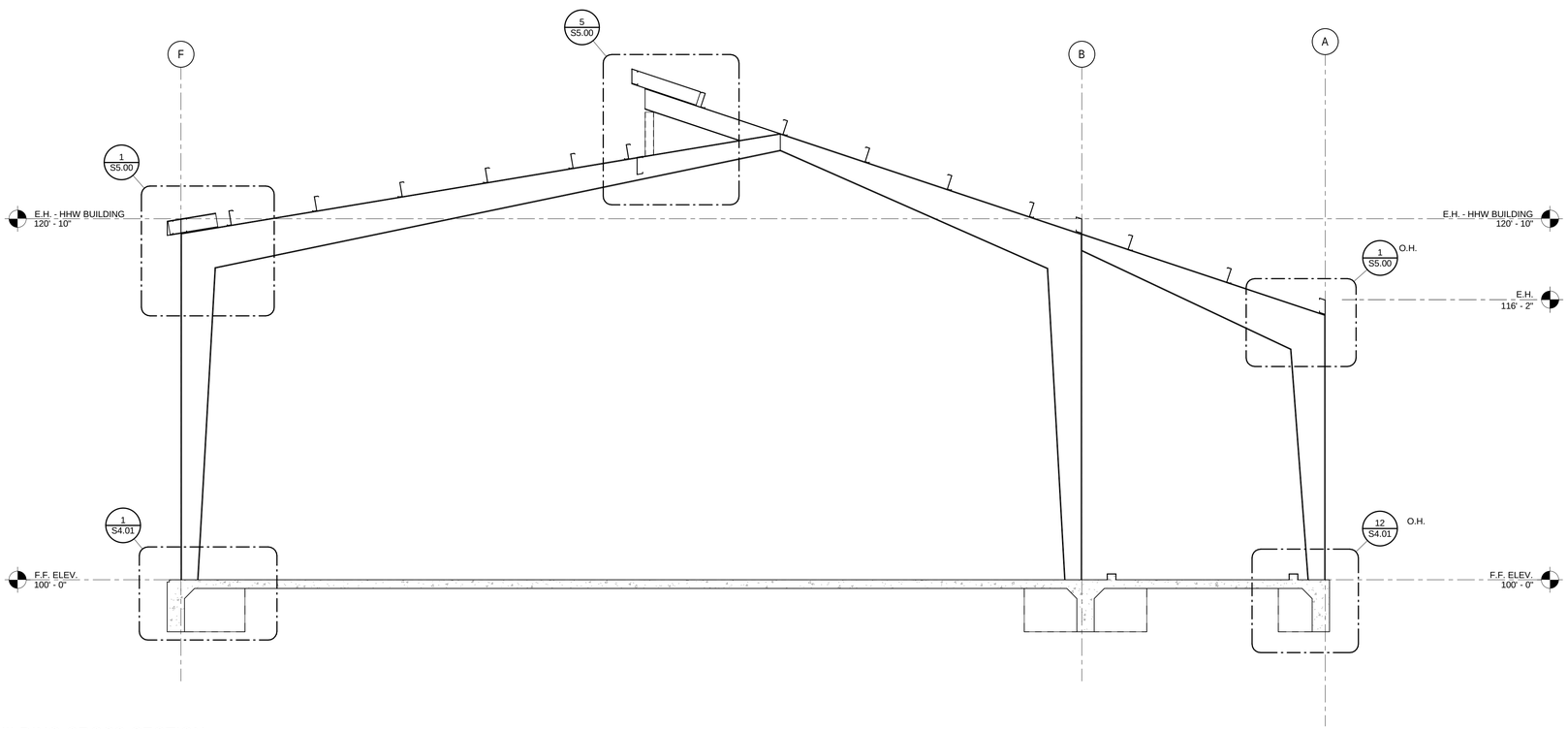

2 BUILDING CROSS-SECTION

SCALE : 1/4" = 1'-0"

ALPHA
Consulting Engineers, Inc.
STRUCTURAL ENGINEERS
13300 OLD BLANCO RD, SUITE 326 SAN ANTONIO, TEXAS 78216
TEL: (210) 227-3647
www.alphaconsultingengineers.com

Alpha Consulting Engineers F-1010

STATE OF TEXAS
SCOTT S. TAK
52345
LICENSED
PROFESSIONAL ENGINEER
10/23/13

DEBRA J. DOCKERY, ARCHITECT, P.C.
118 BROADWAY, SUITE 516
SAN ANTONIO, TX 78205
PHONE (210) 225-6130
FAX (210) 225-7588

CITY OF SAN ANTONIO SOLID WASTE MANAGEMENT DEPARTMENT
CULEBRA HHW AND BULKY WASTE FACILITY
7030 CULEBRA ROAD
SAN ANTONIO, TEXAS 78227

REVISIONS

PROJECT NO.
132257

PHASE
CONSTRUCTION DOCUMENTS

DATE
OCTOBER 2013

DESCRIPTION
BUILDING CROSS SECTIONS

S3.00

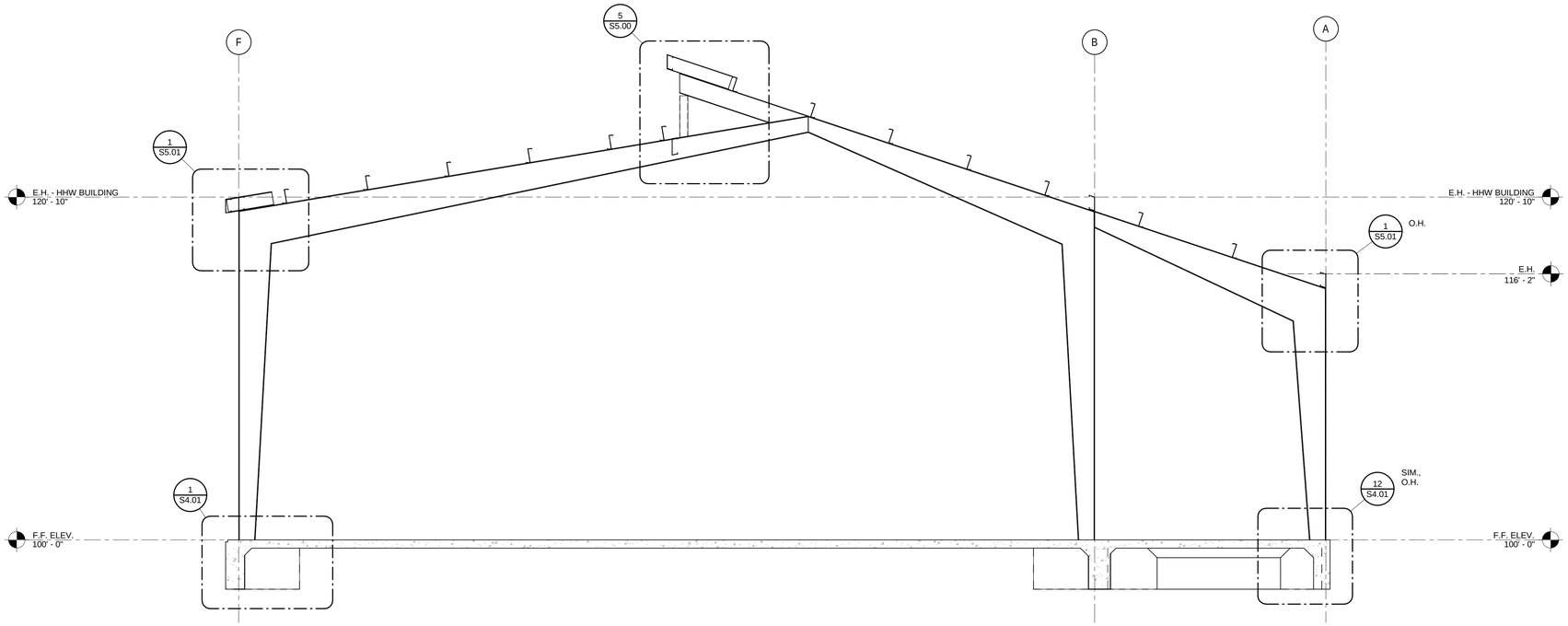

1 BUILDING CROSS-SECTION

SCALE : 1/4" = 1'-0"

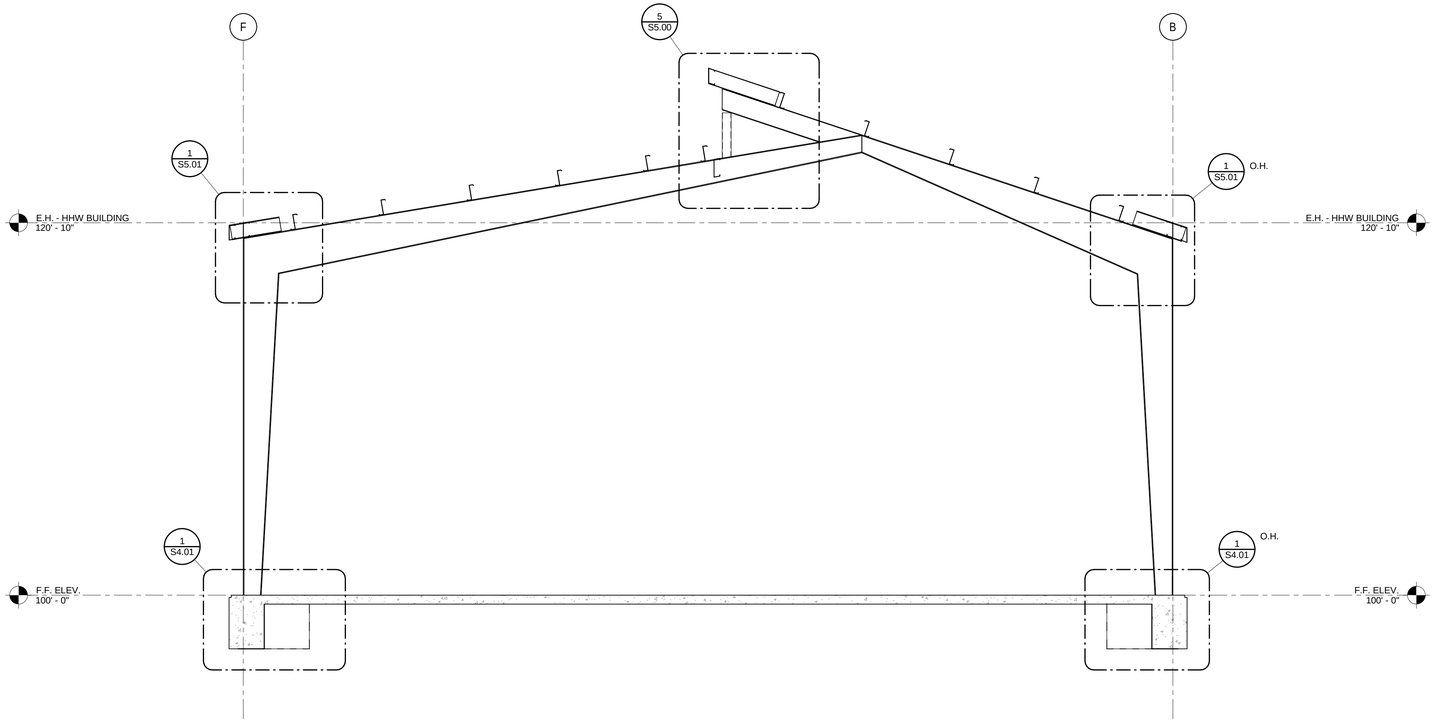

2 BUILDING CROSS-SECTION

SCALE : 1/4" = 1'-0"

DEBRA J. DOCKERY, ARCHITECT, P.C.
118 BROADWAY . SUITE 516
SAN ANTONIO, TX 78205
PHONE (210) 225-6130
FAX (210) 225-7588

CITY OF SAN ANTONIO SOLID WASTE MANAGEMENT DEPARTMENT
CULEBRA HHW AND BULKY WASTE FACILITY
7030 CULEBRA ROAD
SAN ANTONIO, TEXAS 78227

ALPHA
Consulting Engineers, Inc.
STRUCTURAL ENGINEERS
13300 OLD BLANCO RD, SUITE 326 SAN ANTONIO, TEXAS 78216
TEL: (210) 227-3647
www.alphaconsultingengineers.com
Alpha Consulting Engineers F-1010
STATE OF TEXAS
SCOTT S. TAK
52345
LICENSED
PROFESSIONAL ENGINEER
10/23/13

REVISIONS

PROJECT NO.
132257

PHASE
CONSTRUCTION DOCUMENTS

DATE
OCTOBER 2013

DESCRIPTION
BUILDING CROSS SECTIONS

S3.01

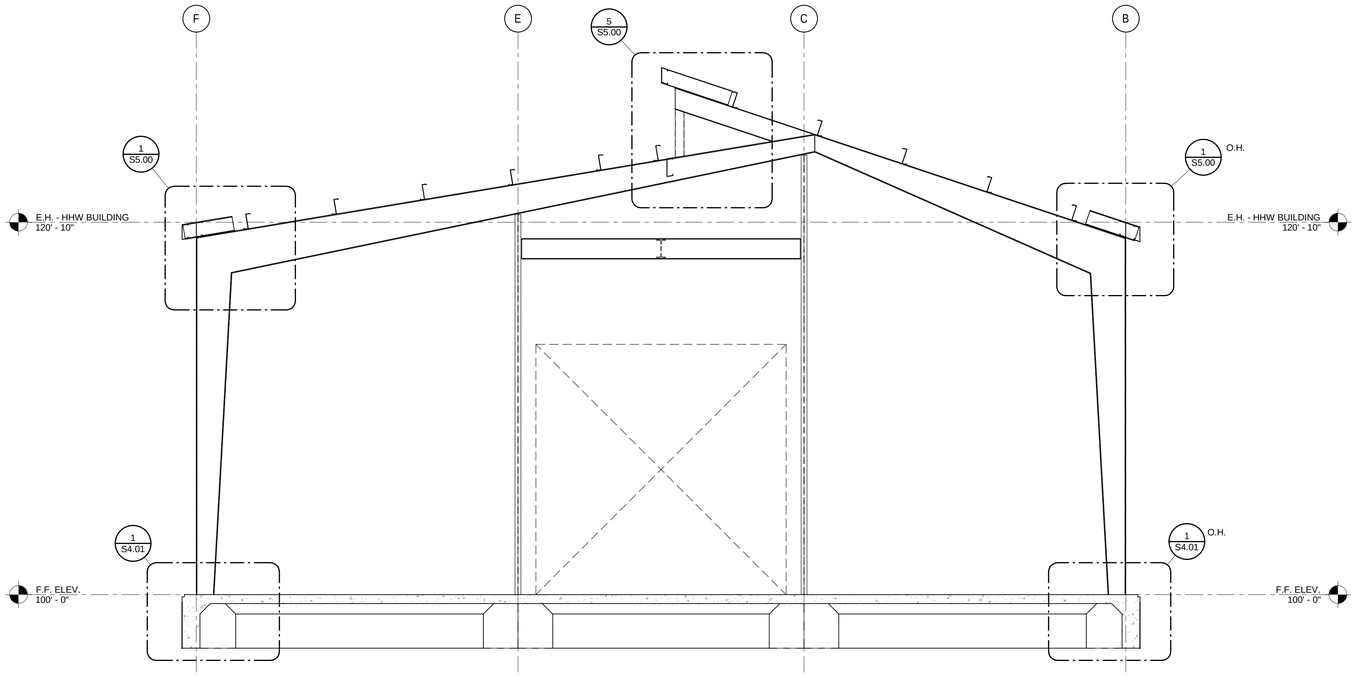

1 BUILDING CROSS-SECTION
SCALE : 1/4" = 1'-0"

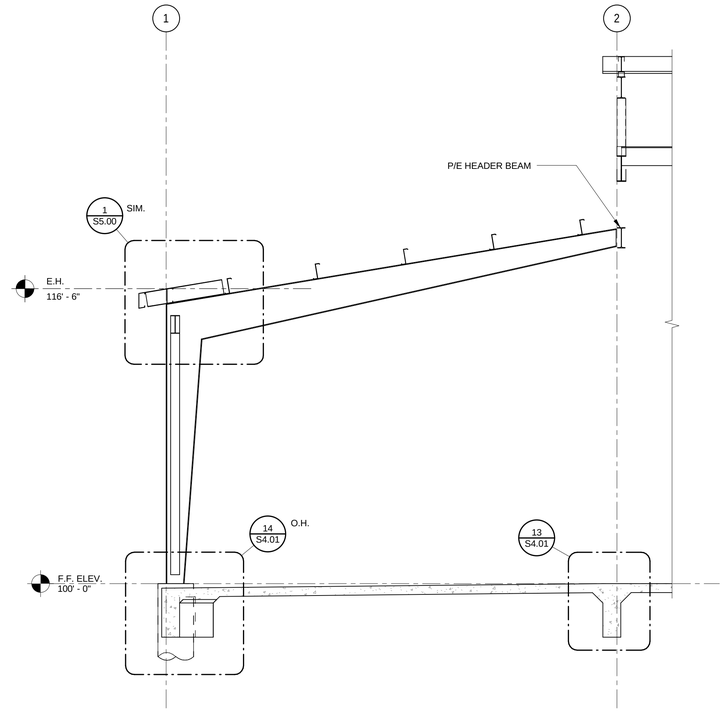

2 BUILDING CROSS-SECTION
SCALE : 1/4" = 1'-0"

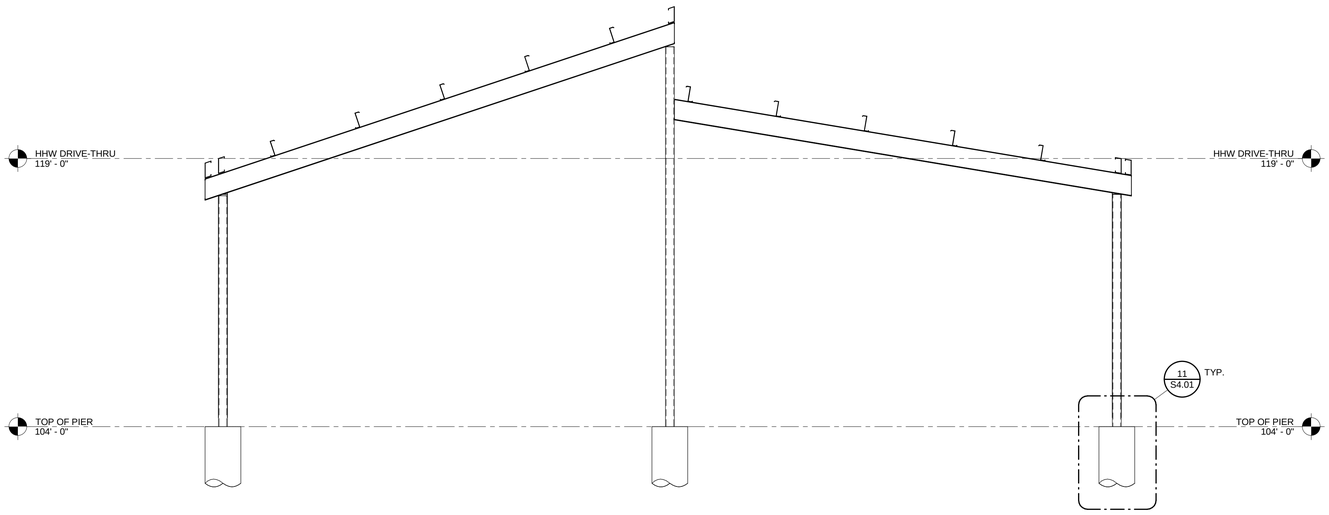

3 BUILDING CROSS-SECTION
SCALE : 1/4" = 1'-0"

DEBRA J. DOCKERY, ARCHITECT, P.C.
118 BROADWAY, SUITE 516
SAN ANTONIO, TX 78205
PHONE (210) 225-6130
FAX (210) 225-7588

CITY OF SAN ANTONIO SOLID WASTE MANAGEMENT DEPARTMENT
CULEBRA HHW AND BULKY WASTE FACILITY
7030 CULEBRA ROAD
SAN ANTONIO, TEXAS 78227

ALPHA
Consulting Engineers, Inc.
STRUCTURAL ENGINEERS
13300 OLD BLANCO RD, SUITE 326 SAN ANTONIO, TEXAS 78216
TEL: (210) 227-3647
www.alphaconsultingengineers.com
Alpha Consulting Engineers F-1010
STATE OF TEXAS
SCOTT S. TAK
52345
LICENSED
PROFESSIONAL ENGINEER
10/23/13

REVISIONS

PROJECT NO.
132257

PHASE
CONSTRUCTION DOCUMENTS

DATE
OCTOBER 2013

DESCRIPTION
BUILDING CROSS SECTIONS

S3.02

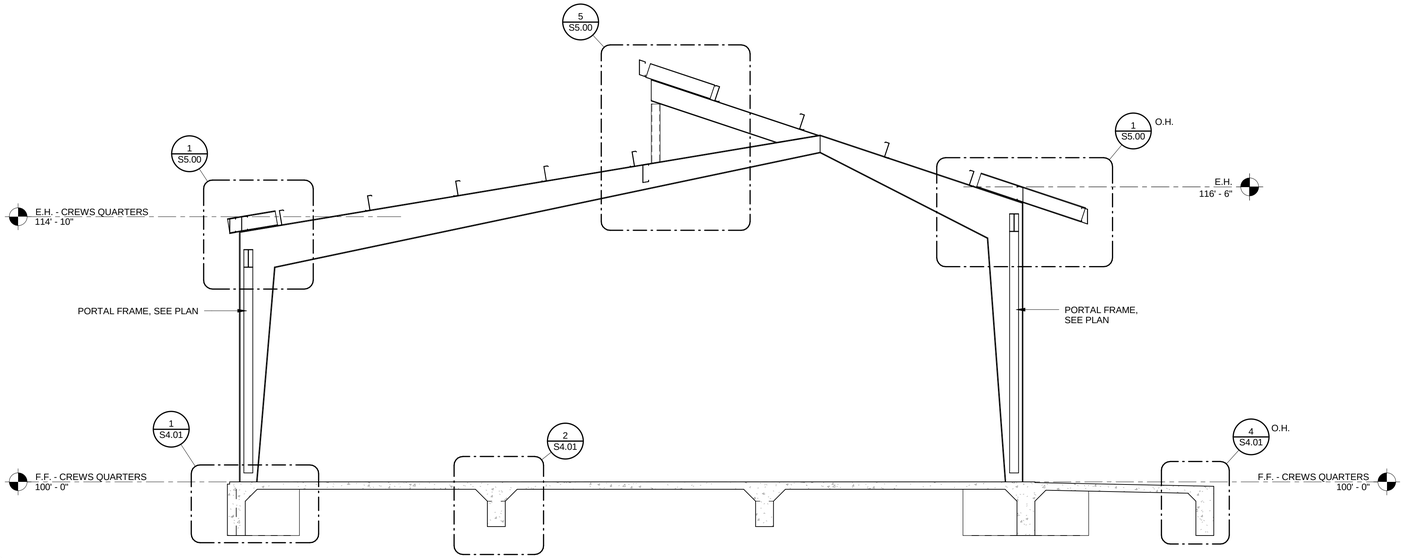

1 BUILDING CROSS-SECTION
SCALE : 1/4" = 1'-0"

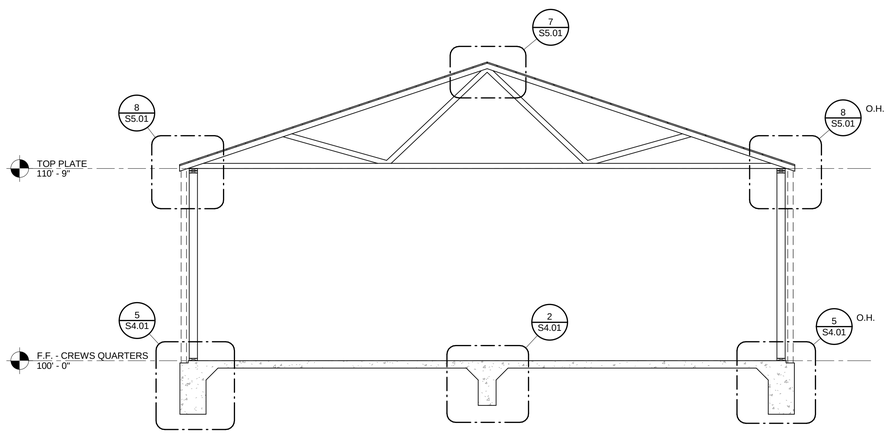

2 BUILDING CROSS-SECTION
SCALE : 1/4" = 1'-0"

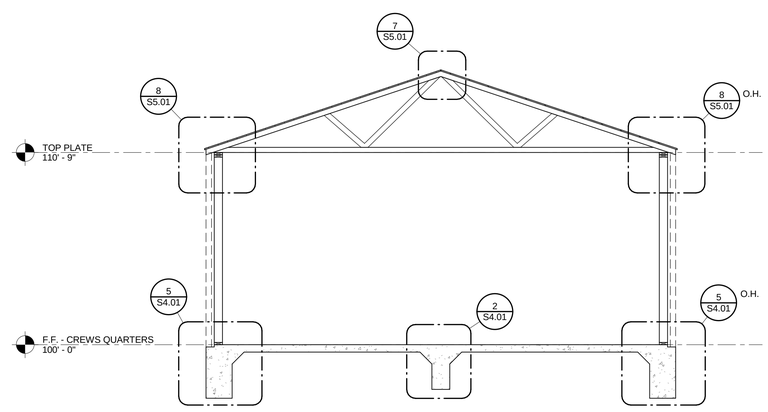

3 BUILDING CROSS-SECTION
SCALE : 1/4" = 1'-0"

DEBRA J. DOCKERY, ARCHITECT, P.C.
118 BROADWAY . SUITE 516
SAN ANTONIO, TX 78205
PHONE (210) 225-6130
FAX (210) 225-7588

CITY OF SAN ANTONIO SOLID WASTE MANAGEMENT DEPARTMENT
CULEBRA HHW AND BULKY WASTE FACILITY
7030 CULEBRA ROAD
SAN ANTONIO, TEXAS 78227

ALPHA Consulting Engineers, Inc.
STRUCTURAL ENGINEERS
13300 OLD BLANCO RD. SUITE 326 SAN ANTONIO, TEXAS 78216
TEL: (210) 227-3647
www.alphaconsultingengineers.com
Alpha Consulting Engineers F-1010
STATE OF TEXAS
SCOTT S. TAK
52345
LICENSED
PROFESSIONAL ENGINEER
10/23/13

REVISIONS

PROJECT NO.
132257

PHASE
CONSTRUCTION DOCUMENTS

DATE
OCTOBER 2013

DESCRIPTION
BUILDING CROSS SECTIONS

S3.03

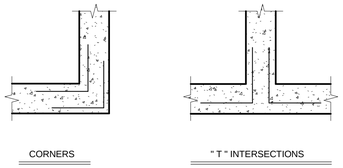

PROVIDE CORNER BARS AT ALL EXTERIOR CORNERS OF GRADE SUPPORTED BEAMS AND AT ENDS OF ALL INTERIOR GRADE BEAMS. BARS SHALL BE SAME SIZE AS BEAM REINFORCING AND SHALL LAP 40 BAR DIAMETERS WITH BEAM REINFORCING. GRADE BEAM AND SLAB REINFORCEMENT SHALL BE CONTINUOUS WITH 40 BAR DIAMETER (NOT LESS THAN 18 INCHES) LAP AT ALL SPLICES.

1 TYPICAL CORNER BAR DETAIL AT GRADE SUPPORTED FOUNDATION

SCALE : 1/2" = 1'-0"

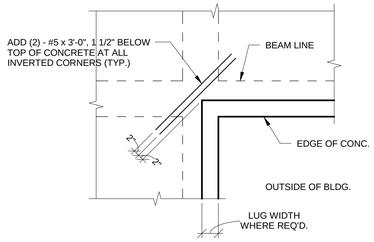

2 TYPICAL REINFORCING DETAIL AT INVERTED CORNER

SCALE : 1/2" = 1'-0"

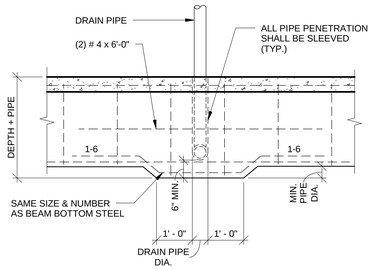

ELEVATION

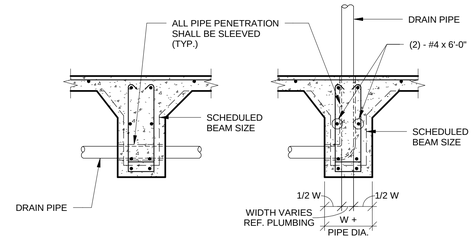

SECTION SECTION

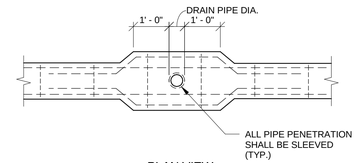

PLAN VIEW

FOR PIPES SLEEVES LARGER THAN 4" O.D.

ADJACENT PIPE PENETRATIONS SHALL HAVE A MINIMUM CLEARANCE OF THE LARGER PIPE SLEEVE DIAMETER BETWEEN THEM.

3 TYPICAL BEAM PENETRATION DETAIL

SCALE : 1/2" = 1'-0"

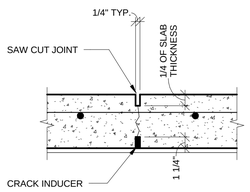

NOTES:

1. SAW JOINTS SHALL BE MADE WITHIN 12 HOURS OF CONCRETE PLACEMENT. (U.N.O.) FILL SAW CUT JOINT WITH EUCO 700 SEMI-RIGID INDUSTRIAL FLOOR JOINT FILLER BY EUCLID CHEMICAL CORP. FOR ALL EXPOSED CONCRETE WHEN CONCRETE IS AT LEAST 28 DAYS OLD. REF PLAN FOR LOCATIONS.

2. 1 1/4" DEEP PLASTIC JOINT FORM OR TOOLED JOINT MAY BE USED AS AN ALTERNATIVE TO SAW -JOINTS.

4 TYPICAL SAW CUT JOINT DETAIL

SCALE : 1 1/2" = 1'-0"

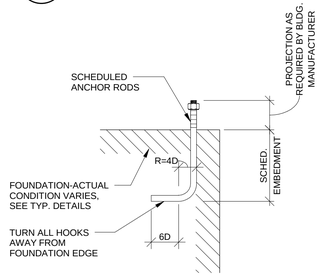

TYPICAL DETAIL 1/2" OR 5/8" RODS
END WALL COLUMNS ONLY

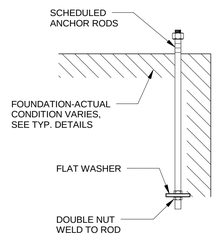

TYPICAL DETAIL RODS LARGER THAN 5/8"
USE AT ALL MAIN FRAMES

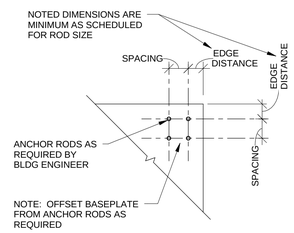

TYPICAL DETAIL
VIEW DETAIL

CORNER CONDITION SHOWN
OTHER CONDITIONS SIMILAR

PRE-ENGINEERED METAL BUILDING ANCHOR ROD SCHEDULE

ROD DIAMETER SEE NOTE #1	MINIMUM EMBEDMENT INTO CONC. FOUNDATION SEE NOTE #2	MINIMUM EDGE DISTANCE SEE NOTE #3	MINIMUM SPACING SEE NOTE #3
1/2" DIA.	12"	4"	4 1/2"
5/8" DIA.	14"	4"	5 1/2"
3/4" DIA.	12"	5"	6 1/2"
7/8" DIA.	15"	6 1/2"	9"
1" DIA.	18"	7"	9"
1 1/4" DIA.	24"	8"	10"
LARGER THAN 1 1/4"	NOTIFY ENGINEER	NOTIFY ENGINEER	NOTIFY ENGINEER

NOTE:

1. THE SIZE AND NUMBER OF RODS SHALL BE SPECIFIED BY BUILDING ENGINEER FOR THE FORCES TRANSFERED TO THE FOUNDATION FROM THE METAL BUILDING AND SUBMITTED FOR REVIEW PRIOR TO THE CONSTRUCTION OF THE FOUNDATION. THIS DETAIL ASSUMES THE RODS ARE STRESSED TO THEIR LIMIT.

2. IF THE DETAILED FOUNDATION DOES NOT ALLOW FOR THE SCHEDULED EMBEDMENT A GREATER NUMBER OF SMALLER RODS SHALL BE SPECIFIED BY THE BLDG. ENGINEER OR THE FOUNDATION ENGINEER SHALL BE NOTIFIED SO THE FOUNDATION DESIGN CAN BE REVISED.

3. ALL COLUMN BASEPLATES SHALL BE DETAILED TO PROVIDE THE SCHEDULED MINIMUM, EDGE DISTANCE AND SPACING. THIS MAY REQUIRE AN OFFSET BASEPLATE FROM THE CENTERLINE OF THE COLUMN. THE BUILDING DESIGNER SHALL COORDINATE WITH THE FOUNDATION DRAWINGS AND ARCHITECTURAL PLAN AND SUBMIT ANCHOR ROD AND BASEPLATE DETAILS FOR REVIEW PRIOR TO THE CONSTRUCTION OF THE FOUNDATION.

5 TYPICAL DETAIL FOR PRE-ENGINEERED BLDG. - ANCHOR RODS

SCALE : 1" = 1'-0"

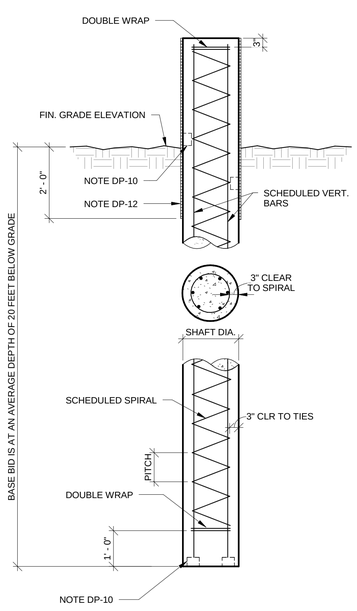

DRILLED PIER NOTES

DP-1 THE FOUNDATION PIER DESIGN IS BASED ON THE GEOTECHNICAL ENGINEERING STUDY PREPARED BY GEOTECHNICAL CONSULTANTS, INC. PROJECT NO.13116, DATED JUNE 05, 2013.

DP-2 ALL PIERS SHALL BE INSPECTED BY A GEOTECHNICAL ENGINEER OR BY HIS REPRESENTATIVE PRIOR TO PLACING REINFORCING STEEL AND CONCRETE IN ORDER TO ASSURE THAT THE BEARING SURFACES ARE CONSISTENT WITH DESIGN RECOMMENDATIONS.

DP-3 PROVIDE INSPECTING ENGINEER WITH AN ELECTRIC LIGHT AND PLUMB-BOB TO OBSERVE ALL PIER EXCAVATIONS.

DP-4 ALL PIER EXCAVATIONS SHALL BE FREE OF WATER PRIOR TO PLACING CONCRETE.

DP-5 PIER HOLES SHALL NOT BE LEFT OPEN OVERNIGHT (NO EXCEPTIONS). PIERS SHALL BE POURED THE SAME DAY THEY ARE DRILLED.

DP-6 PROVIDE STEEL CASING IF REQUIRED, TO PREVENT EXCAVATION SLOUGHING AND/ OR SUBSURFACE WATER SEEPAGE. STEEL CASING MAY BE REMOVED DURING CONCRETE PLACEMENT SEQUENCE PROVIDING THERE IS ENOUGH CONCRETE HEAD TO PREVENT SLOUGHING SOIL FROM PENETRATING INTO THE PIER AREA.

DP-7 ANY CONSTRUCTION JOINT IN THE PIER SHAFT MUST OCCUR AT LEAST 6 INCHES ABOVE GRADE ELEVATION.

DP-8 CONCRETE PLACEMENT SHALL BE MADE WITH A TREMIE WITH AT LEAST A 6 FOOT HOSE OR METAL SNOUT.

DP-9 CENTER CAGE IN HOLE WITH 3 CONC. SPACER BLOCKS EVERY 8 FT. SUPPORT CAGE ON 3 CONC. SEAT BLOCKS. DO NOT RAISE CAGE OFF DRILLED PIER BOTTOM.

DP-10 MACHINE CLEAN BOTTOM OF REAM.

DP-11 EXTEND PIER SHAFTS & REINF. SOFFIT USING SONOTUBE ABOVE WORKING GRADE. USE SONOTUBE TO AN ELEVATION 2'-0" BELOW WORKING GRADE AT TIME OF DRILLING. REFER TO SPECS. FOR CONDITIONS REQUIRING ADDITIONAL SONOTUBE AND FOR CONSTRUCTION JOINT.

DP-12 PROVIDE UNIT PRICING FOR PIERS REQUIRING TEMPORARY STEEL CASING. REFER TO PROJECT SPECIFICATIONS FOR UNIT PRICING AND CASING PROCEDURE.

DP-13 HIGH TORQUE, HIGH POWER DRILLING EQUIPMENT AND ROCK AUGERS WILL BE REQUIRED.

DP-14 BEARING PRESSURE: 15 KSF

DRILLED PIER SCHEDULE

DIAM.	VERT. BARS	SPIRAL
24"	6 -# 8	3/8 @ 12" PITCH

9 TYP. DRILLED PIER DETAIL & NOTES

SCALE : 1/2" = 1'-0"

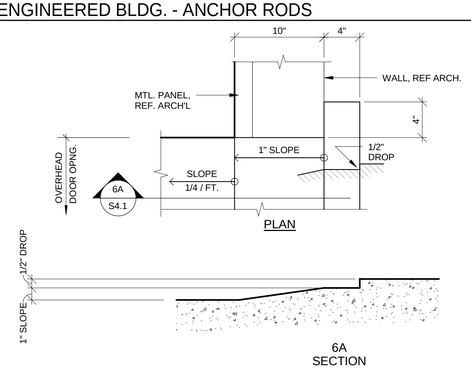

6 DETAIL @ OVERHEAD DOORS

SCALE : 1 1/2" = 1'-0"

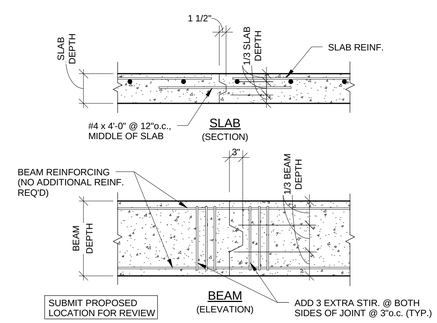

7 TYPICAL VERTICAL CONSTRUCTION JOINT DETAIL

SCALE : 3/4" = 1'-0"

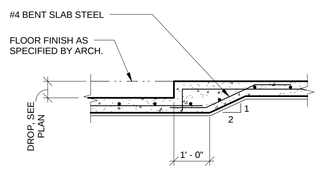

8 TYPICAL SLAB DROP DETAIL

SCALE : 1/2" = 1'-0"

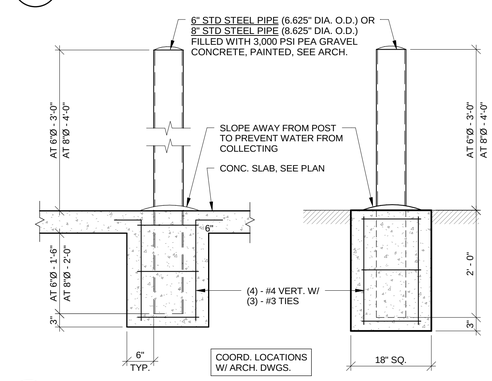

10 TYPICAL BOLLARD DETAIL

SCALE : 3/4" = 1'-0"

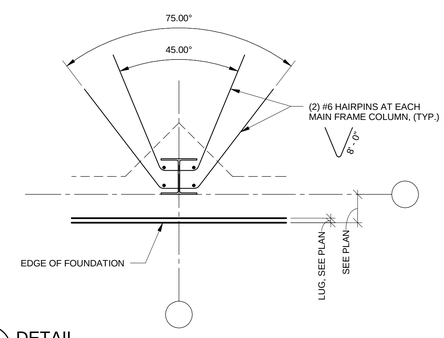

11 DETAIL

SCALE : 1/2" = 1'-0"

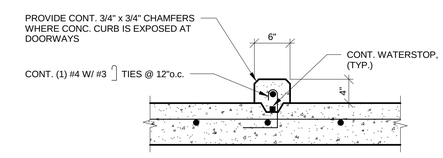

12 TYP. CURB DETAIL

SCALE : 1" = 1'-0"

DEBRA J. DOCKERY, ARCHITECT, P.C.
118 BROADWAY, SUITE 516
SAN ANTONIO, TX 78205
PHONE (210) 225-6130
FAX (210) 225-7588

Alpha Consulting Engineers F-1010
ALPHA Consulting Engineers, Inc.
STRUCTURAL ENGINEERS
13300 OLD BLANCO RD, SUITE 326 SAN ANTONIO, TEXAS 78216
TEL: (210) 227-3647
www.alphaconsultingengineers.com
STATE OF TEXAS SCOTT S. TAK 52345 LICENSED PROFESSIONAL ENGINEER
10/23/13

CITY OF SAN ANTONIO SOLID WASTE MANAGEMENT DEPARTMENT
CULEBRA HHW AND BULKY WASTE FACILITY
7030 CULEBRA ROAD
SAN ANTONIO, TEXAS 78227

REVISIONS

PROJECT NO. 132257

PHASE CONSTRUCTION DOCUMENTS

DATE OCTOBER 2013

DESCRIPTION TYPICAL FOUNDATION DETAILS

S4.00

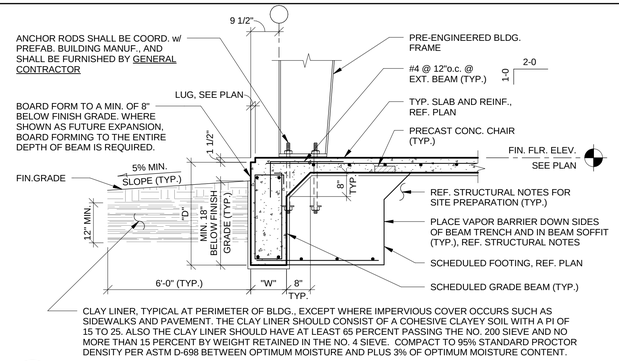

1 TYP. EXTERIOR BEAM SECTION
SCALE : 1/2" = 1'-0"

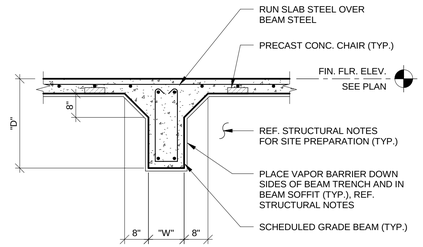

2 TYP. INTERIOR BEAM SECTION
SCALE : 1/2" = 1'-0"

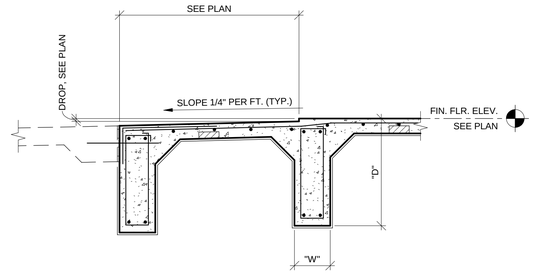

3 SECTION
SCALE : 1/2" = 1'-0"

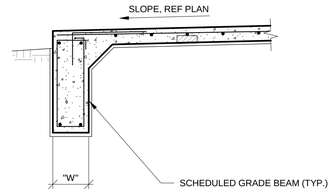

4 SECTION
SCALE : 1/2" = 1'-0"

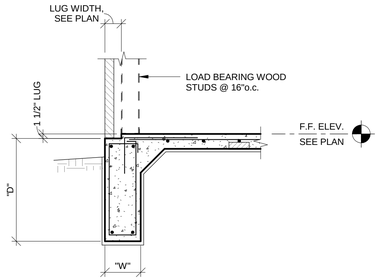

5 SECTION
SCALE : 1/2" = 1'-0"

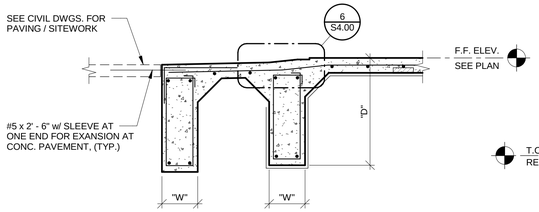

6 SECTION
SCALE : 1/2" = 1'-0"

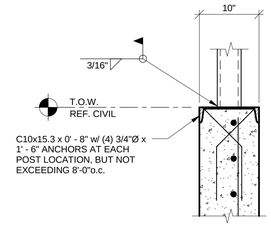

10A DETAIL
SCALE : 1" = 1'-0"

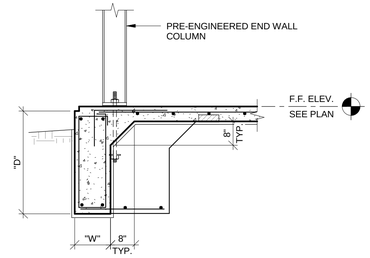

7 SECTION
SCALE : 1/2" = 1'-0"

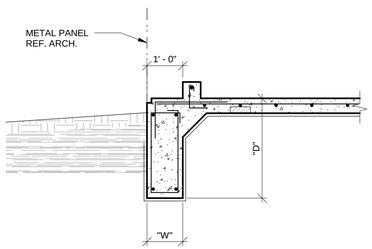

8 SECTION
SCALE : 1/2" = 1'-0"

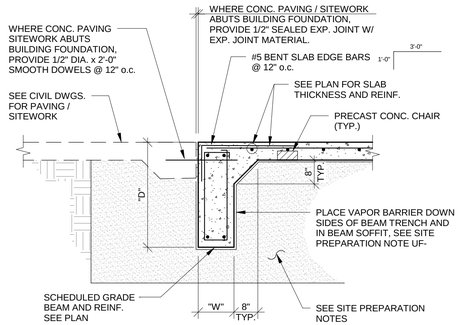

9 SECTION
SCALE : 1/2" = 1'-0"

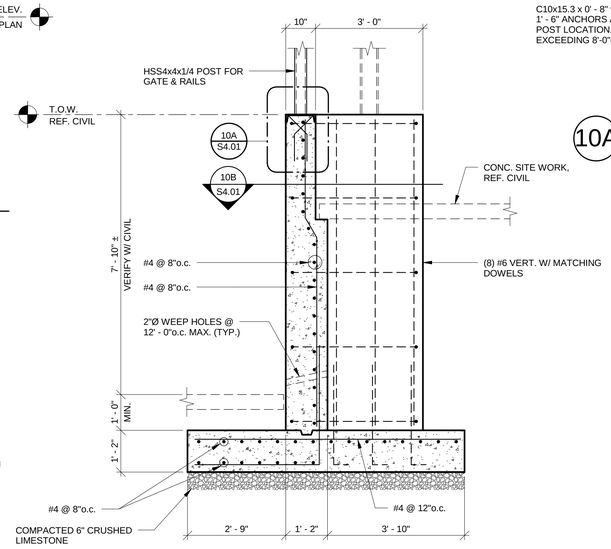

10 10A 10B SECTION
SCALE : 1/2" = 1'-0"

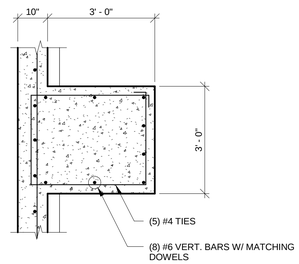

10B DETAIL
SCALE : 1/2" = 1'-0"

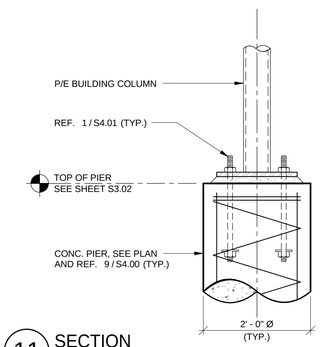

11 SECTION
SCALE : 3/4" = 1'-0"

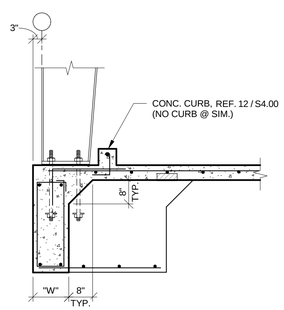

12 SECTION
SCALE : 1/2" = 1'-0"

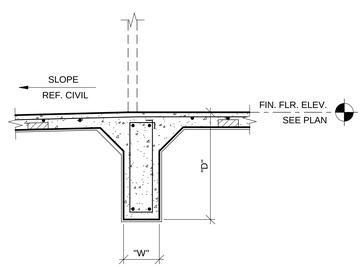

13 SECTION
SCALE : 1/2" = 1'-0"

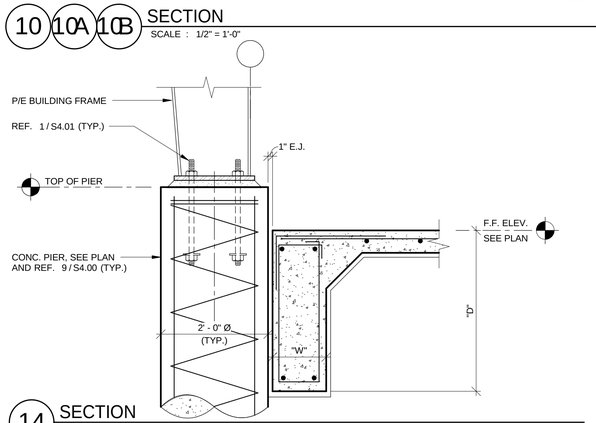

14 SECTION
SCALE : 3/4" = 1'-0"

DEBRA J. DOCKERY, ARCHITECT, P.C.
118 BROADWAY, SUITE 516
SAN ANTONIO, TX 78205
PHONE (210) 225-6130
FAX (210) 225-7588

CITY OF SAN ANTONIO SOLID WASTE MANAGEMENT DEPARTMENT
CULEBRA HHW AND BULKY WASTE FACILITY
7030 CULEBRA ROAD
SAN ANTONIO, TEXAS 78227

ALPHA Consulting Engineers, Inc.
STRUCTURAL ENGINEERS
13300 OLD BLANCO RD, SUITE 326 SAN ANTONIO, TEXAS 78216
TEL: (210) 227-3647
www.alphaconsultingengineers.com
Alpha Consulting Engineers F-1010
STATE OF TEXAS SCOTT S. TAK 52345 LICENSED PROFESSIONAL ENGINEER
10/23/13

REVISIONS

PROJECT NO. 132257

PHASE CONSTRUCTION DOCUMENTS

DATE OCTOBER 2013

DESCRIPTION FOUNDATION SECTIONS AND DETAILS

S4.01

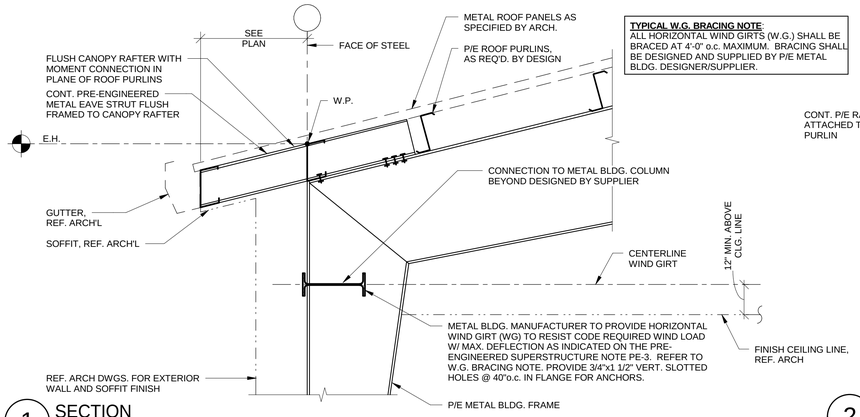

TYPICAL W.G. BRACING NOTE:
ALL HORIZONTAL WIND GIRTS (W.G.) SHALL BE BRACED AT 4'-0" o.c. MAXIMUM. BRACING SHALL BE DESIGNED AND SUPPLIED BY P/E METAL BLDG. DESIGNER/SUPPLIER.

1 SECTION
SCALE : 3/4" = 1'-0"

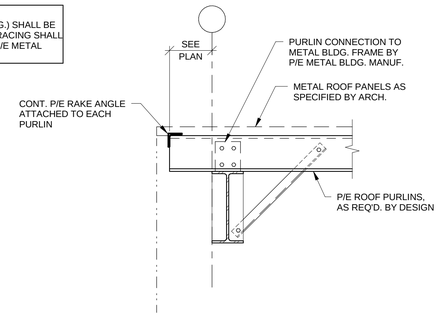

2 SECTION
SCALE : 3/4" = 1'-0"

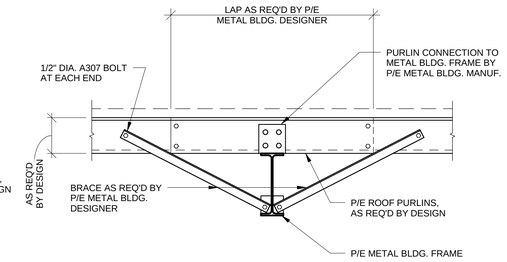

3 SECTION
SCALE : 3/4" = 1'-0"

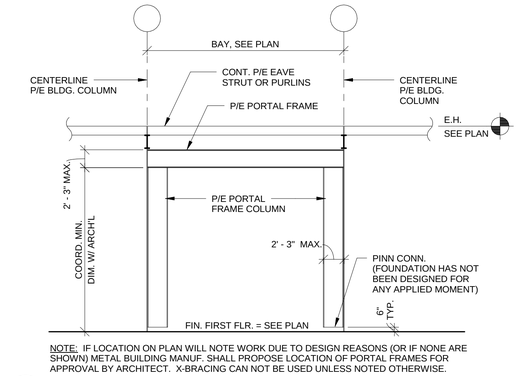

NOTE: IF LOCATION ON PLAN WILL NOTE WORK DUE TO DESIGN REASONS (OR IF NONE ARE SHOWN) METAL BUILDING MANUF. SHALL PROPOSE LOCATION OF PORTAL FRAMES FOR APPROVAL BY ARCHITECT. X-BRACING CAN NOT BE USED UNLESS NOTED OTHERWISE.

4 TYPICAL PORTAL FRAME ELEVATION
SCALE : 1/8" = 1'-0"

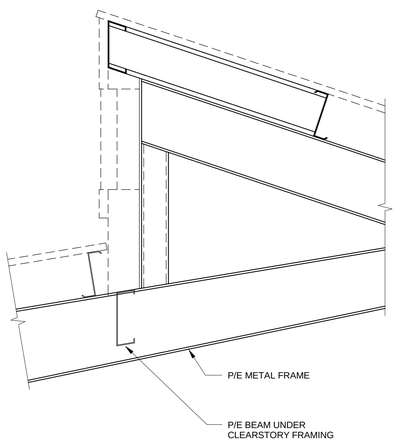

5 SECTION
SCALE : 3/4" = 1'-0"

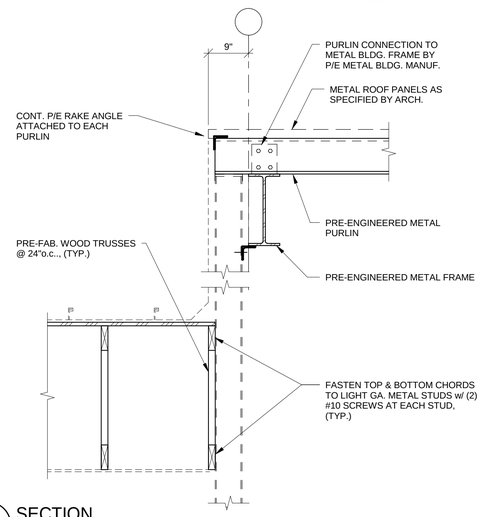

6 SECTION
SCALE : 3/4" = 1'-0"

ALPHA
Consulting Engineers, Inc.
STRUCTURAL ENGINEERS
13300 OLD BLANCO RD, SUITE 326 SAN ANTONIO, TEXAS 78216
TEL: (210) 227-3647
www.alphaconsultingengineers.com

Alpha Consulting Engineers F-1010

STATE OF TEXAS
SCOTT S. TAK
52345
LICENSED
PROFESSIONAL ENGINEER
10/23/13

DEBRA J. DOCKERY, ARCHITECT, P.C.
118 BROADWAY, SUITE 516
SAN ANTONIO, TX 78205
PHONE (210) 225-6130
FAX (210) 225-7588

CITY OF SAN ANTONIO SOLID WASTE MANAGEMENT DEPARTMENT
CULEBRA HHW AND BULKY WASTE FACILITY
7030 CULEBRA ROAD
SAN ANTONIO, TEXAS 78227

REVISIONS

PROJECT NO. 132257

PHASE CONSTRUCTION DOCUMENTS

DATE OCTOBER 2013

DESCRIPTION ROOF FRAMING SECTIONS AND DETAILS

S5.00

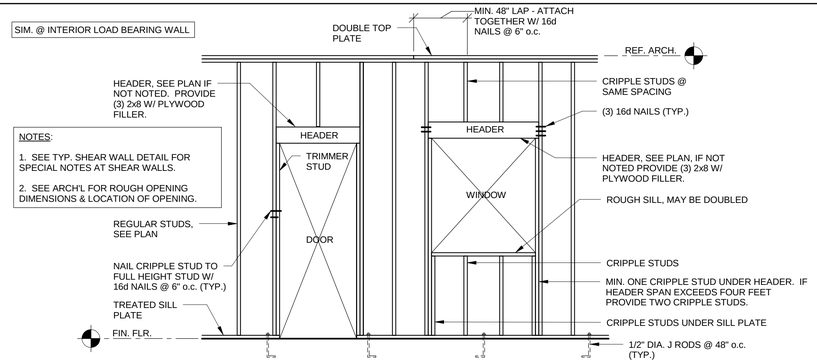

1 TYPICAL EXTERIOR FRAMED OPENING DETAILS
SCALE : 3/8" = 1'-0"

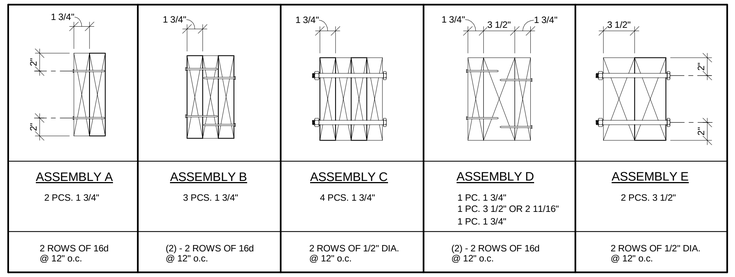

ASSEMBLY A	ASSEMBLY B	ASSEMBLY C	ASSEMBLY D	ASSEMBLY E
2 PCS. 1 3/4"	3 PCS. 1 3/4"	4 PCS. 1 3/4"	1 PC. 1 3/4" 1 PC. 3 1/2" OR 2 11/16" 1 PC. 1 3/4"	2 PCS. 3 1/2"
2 ROWS OF 16d @ 12" o.c.	(2) - 2 ROWS OF 16d @ 12" o.c.	2 ROWS OF 1/2" DIA. @ 12" o.c.	(2) - 2 ROWS OF 16d @ 12" o.c.	2 ROWS OF 1/2" DIA. @ 12" o.c.

2 TYPICAL MULTI-MEMBER BEAM ASSEMBLY DETAIL
SCALE : 1 1/2" = 1'-0"

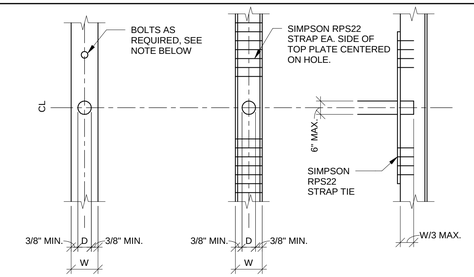

PLAN-SILL PLATE
FOR "D" GREATER THAN 1/3W PROVIDE ANCHOR BOLTS @ 12" MAX. AT EA. SIDE OF THE HOLE.

PLAN-DBL. TOP PLATE
FOR "D" GREATER THAN 1/3 W PROVIDE STRIP AT EACH SIDE AS SHOWN - 2D/3 MAX.

NOTCH ON PLATE

3 HOLE OR NOTCH THRU PLATES
SCALE : 3/4" = 1'-0"

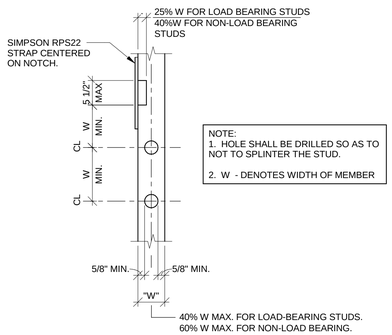

4 HOLE OR NOTCH THRU STUDS
SCALE : 3/4" = 1'-0"

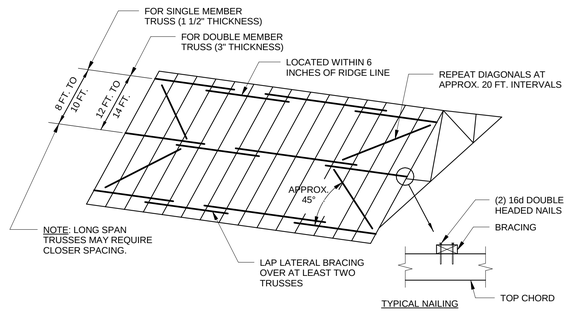

5 TYP. TEMPORARY TRUSS DIAGONAL BRACING SYSTEM FOR A COMPRESSION CHORD
SCALE : 1/2" = 1'-0"

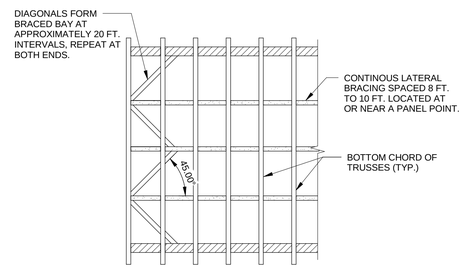

6 TYP. BOTTOM CHORD ERECTION BRACING DETAIL
SCALE : 1/4" = 1'-0"

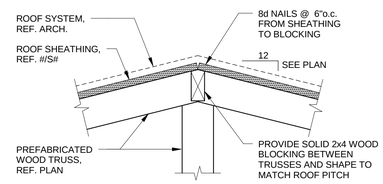

7 SECTION
SCALE : 1 1/2" = 1'-0"

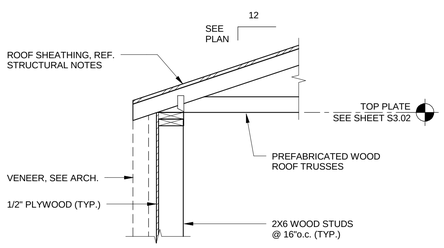

8 SECTION
SCALE : 3/4" = 1'-0"

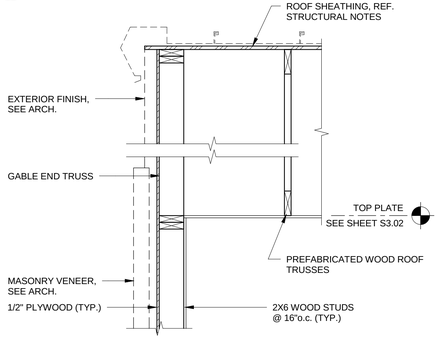

9 SECTION
SCALE : 3/4" = 1'-0"

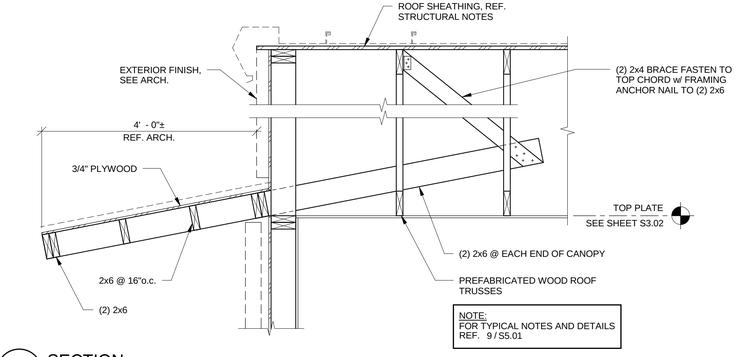

10 SECTION
SCALE : 3/4" = 1'-0"

DEBRA J. DOCKERY, ARCHITECT, P.C.
118 BROADWAY . SUITE 516
SAN ANTONIO, TX 78205
PHONE (210) 225-6130
FAX (210) 225-7588

CITY OF SAN ANTONIO SOLID WASTE MANAGEMENT DEPARTMENT
CULEBRA HHW AND BULKY WASTE FACILITY
7030 CULEBRA ROAD
SAN ANTONIO, TEXAS 78227

Alpha Consulting Engineers F-1010
ALPHA
Consulting Engineers, Inc.
STRUCTURAL ENGINEERS
13300 OLD BLANCO RD, SUITE 326 SAN ANTONIO, TEXAS 78216
TEL: (210) 227-3647
www.alphaconsultingengineers.com
STATE OF TEXAS
SCOTT S. TAK
52345
LICENSED
PROFESSIONAL ENGINEER
10/23/13

REVISIONS

PROJECT NO. 132257

PHASE CONSTRUCTION DOCUMENTS

DATE OCTOBER 2013

DESCRIPTION SECTIONS AND DETAILS

S5.01