CITY OF SAN ANTONIO
CAPITAL IMPROVEMENTS
MANAGEMENT SERVICES

ADDENDUM NO.: 4

PROJECT NAME: **POLICE TRAINING ACADEMY HVAC COMPONENT REPLACEMENT**

DATE: 7/15/2013

This Addendum should be included in and be considered part of the plans and specifications for the name of the project. The Contractor shall be required to sign an acknowledgement of the receipt of this addendum and submit with their bid.

CIMS PROJECT NO.: **35-06010**

STATE OF TEXAS
HECTOR M. CARRISALEZ
64007
LICENSED
PROFESSIONAL ENGINEER
7-11-2013
Alderson & Associates, Inc.
F-1008

<u>Formal Invitation for Bid and Contract:</u>

PROJECT MANUAL - SECTION 23 08 00

- Paragraph 1.3.B – Delete Items 9 and 10.

PROJECT MANUAL - SECTION 23 21 23

- Paragraph 1.1.A.1 – Revise to read as follows:

  "1. "Vertical In-Line Pumps."

- Paragraph 2.1 – Revise to read as follows:

  2.1 VERTICAL IN-LINE PUMPS

  A. Manufacturers:
     1. Armstrong.
     2. Aurora.
     3. Bell & Gossett.
     4. Grundfos/Paco
     5. Taco

B. Type: Vertical, single stage, close coupled, radial or horizontally split casing for in-line mounting, for 175 psig working pressure.

C. Casing: Cast iron, with suction and discharge gage port, casing wear ring, seal flush connection, drain plug, flanged suction and discharge.

D. Impeller: Bronze, fully enclosed, keyed directly to motor shaft or extension.

E. Shaft: Carbon steel with stainless steel impeller cap screw or nut and bronze sleeve.

F. Shaft Sleeve: Aluminum bronze.

G. Seal: Packing gland with minimum four rings graphite impregnated packing and lantern ring, 230 degrees F maximum continuous operating temperature.

PROJECT MANUAL - SECTION 23 34 00

- Delete section in its entirety.

PROJECT MANUAL - SECTION 23 64 11

- Paragraph 2.4.C – Insulation thickness shall be 1½" minimum.
- Paragraph 2.5.A.1 – Delete "aluminum (mircochannel) type".
- Paragraph 2.5.B.1 – Delete "Expanded metal".
- Paragraph 2.7.F – Add the following:

  "8. Hot gas bypass sized for minimum compressor loading on one compressor only, bypasses hot refrigerant gas to evaporator."

- Paragraph 2.7.H – Delete "and sounds audible alarm".

PROJECT MANUAL - SECTION 23 73 00

- Paragraph 2.1 – Delete paragraph in its entirety.
- Paragraph 2.2 – Delete subparagraphs A, B, C, D, F, G and I.
- Paragraph 2.3 – Delete paragraph in its entirety.
- Paragraph 2.5 – Delete paragraph in its entirety.
- Paragraph 2.7 – Delete subparagraphs A and D.
- Paragraph 2.7.C.1 – Revise "Merv 11" to read "Merv 8".
- Paragraph 2.8 – Delete paragraph in its entirety.
- Paragraph 2.9 – Delete paragraph in its entirety.
- Paragraph 2.10 – Delete paragraph in its entirety.
- Paragraph 3.1 – Delete subparagraphs A, B, C and D.
- Paragraph 3.4 – Delete paragraph in its entirety.

PLAN SHEETS MD1.1, MD1.2, M1.1, M1.2, M1.3, M1.4, M1.5, M1.6 and M1.7

- Revise General Mechanical Note No. 2 to read as follows:

  "2. "Existing ductwork shall be internally cleaned and vacuumed. Existing ductwork consists of internally lined sheetmetal. Clean duct systems with high power vacuum machines. Install insulated access doors/openings into existing ductwork for cleaning purposes. Duct cleaning shall be performed by a State licensed duct cleaning Contractor. Cleaning shall be in accordance with the North American Insulation Manufacturers Association (NAIMA) and the National Air Duct Cleaners Association (NADCA) standards and recommended practices."

PLAN SHEETS MD1.1, M1.1, M1.2, M1.3, M1.4, M1.5, M1.6 and M1.7

- Delete General Mechanical Note 8.

PLAN SHEET MD1.1

- Existing air handling units are to remain. Their respective coils, fan motors, condensate drain pans and piping and internal casing insulation is to be replaced with new.

PLAN SHEET MD1.2

- A small portion of the hot water piping connection to one of the boilers is to remain.
- A small portion of the chilled water piping downstream of the emergency valved taps is to remain.

PLAN SHEET M1.6

- Existing air handling units are to remain. Their respective coils, fan motors, condensate drain pan and piping and internal casing insulation is to be replaced with new.

PLAN SHEET M3.1

- Expansion Tank Schedule – Revise
- Hot Water Boiler Schedule – Revise
- Pump Schedule – Revise
- Air Handling Unit Schedule – Delete
- Air Cooled Chiller Schedule – Revise
- Add Existing Air Handling Unit Modification Schedule

PLAN SHEET M4.1

- Revise Detail No.'s 2, 3, 4 and 5.
- Delete Detail No.'s 6 and 4/M6.0.

PLAN SHEET M4.2

- Revise Detail No.'s 3 and 4.
- Delete Detail No.'s 2 and 6.

PLAN SHEET M5.2

- Revise Detail No.'s 1, 2 and 3.

PLAN SHEET M5.4

- Revise Detail No. 2.

PLAN SHEET DE1.5

- Revise Keyed Note 6 to read as follows:

  "Existing AHU-1 and AHU-2 motors to be replaced. Remove conductors back to disconnect switches. Existing 30A disconnect switches for both AHU's to remain."

- Revise Keyed Note 7 to read as follows:

  "Existing AHU-3 motor to be replaced. Remove conductors back to disconnect switch. Existing 30A disconnect switch to remain."

- Revise Keyed Note 8 to read as follows:

  "Existing AHU-4 motor to be replaced. Remove conductors back to disconnect switch. Existing 30A disconnect switch to remain."

- Revise Keyed Note 9 to read as follows:

  "Existing AHU-5 motor to be replaced. Remove conductors back to disconnect switch. Existing 60A disconnect switch to remain."

- Revise Keyed Note 10 to read as follows:

  "Existing AHU-6 motor to be replaced. Remove conductors back to disconnect switch. Existing 60A disconnect switch to remain."

- Revise Keyed Note 11 to read as follows:

  "Existing AHU-7 motor to be replaced. Remove conductors back to disconnect switch. Existing 30A disconnect switch to remain."

PLAN SHEET E1.5

- Revise Keyed Note 6 to read as follows:

  "Provide equipment connections as required for new AHU-1 and AHU-2 motors. Provide (3) #10, (1) 10 GND., ¾"C for both AHU's. Re-use existing 30A disconnect switches for both AHU's."

- Revise Keyed Note 7 to read as follows:

  "Provide an equipment connection as required for new AHU-3 motor. Provide (3) #10, (1) 10 GND., ¾"C. Re-use existing 30A disconnect switch."

- Revise Keyed Note 8 to read as follows:

  "Provide an equipment connection as required for new AHU-4 motor. Provide (3) #10, (1) 10 GND., ¾"C. Re-use existing 30A disconnect switch."

- Revise Keyed Note 9 to read as follows:

  "Provide an equipment connection as required for new AHU-5 motor. Provide (3) #8, (1) 10 GND., ¾"C. Re-use existing 60A disconnect switch."

- Revise Keyed Note 10 to read as follows:

  "Provide an equipment connection as required for new AHU-6 motor. Provide (3) #8, (1) 10 GND., ¾"C. Re-use existing 60A disconnect switch."

- Revise Keyed Note 11 to read as follows:

  "Provide an equipment connection as required for new AHU-7 motor. Provide (3) #10, (1) 10 GND., ¾"C. Re-use existing 60A disconnect switch."

Note: Addenda Acknowledgement Form for Addendum 4 is attached herein. This form must be signed and submitted with the bid package.

CITY OF SAN ANTONIO
CAPITAL IMPROVEMENTS
MANAGEMENT SERVICES

RECEIPT OF ADDENDUM NUMBER(S) **4** IS HEREBY ACKNOWLEDGED FOR PLANS AND SPECIFICATIONS FOR CONSTRUCTION OF **POLICE TRAINING ACADEMY HVAC COMPONENT REPLACEMENT 35-06010**

FOR WHICH BIDS WILL BE OPENED ON **TUESDAY, JULY 23, 2013 AT 2:00 P.M.**

THIS ACKNOWLEDGEMENT MUST BE SIGNED AND RETURNED WITH THE BID PACKAGE.

Company Name: _____

Address: _____

City/State/Zip Code: _____

Date: _____

_____
Signature

_____
Print Name/Title

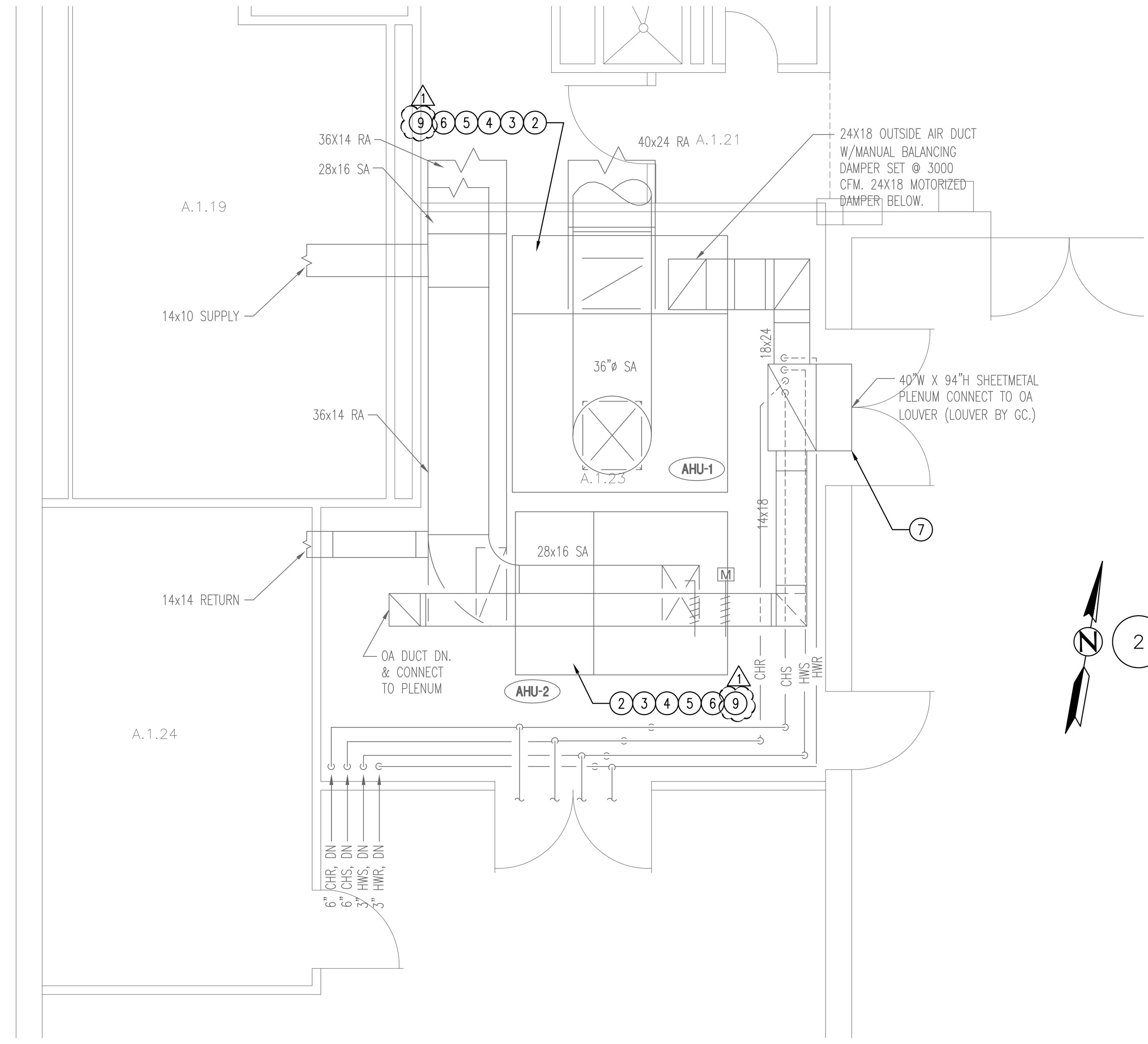

ENLARGED MECHANICAL FLOOR PLAN - 1ST FLOOR, AREA-A

SCALE: 1/4" = 1'-0"

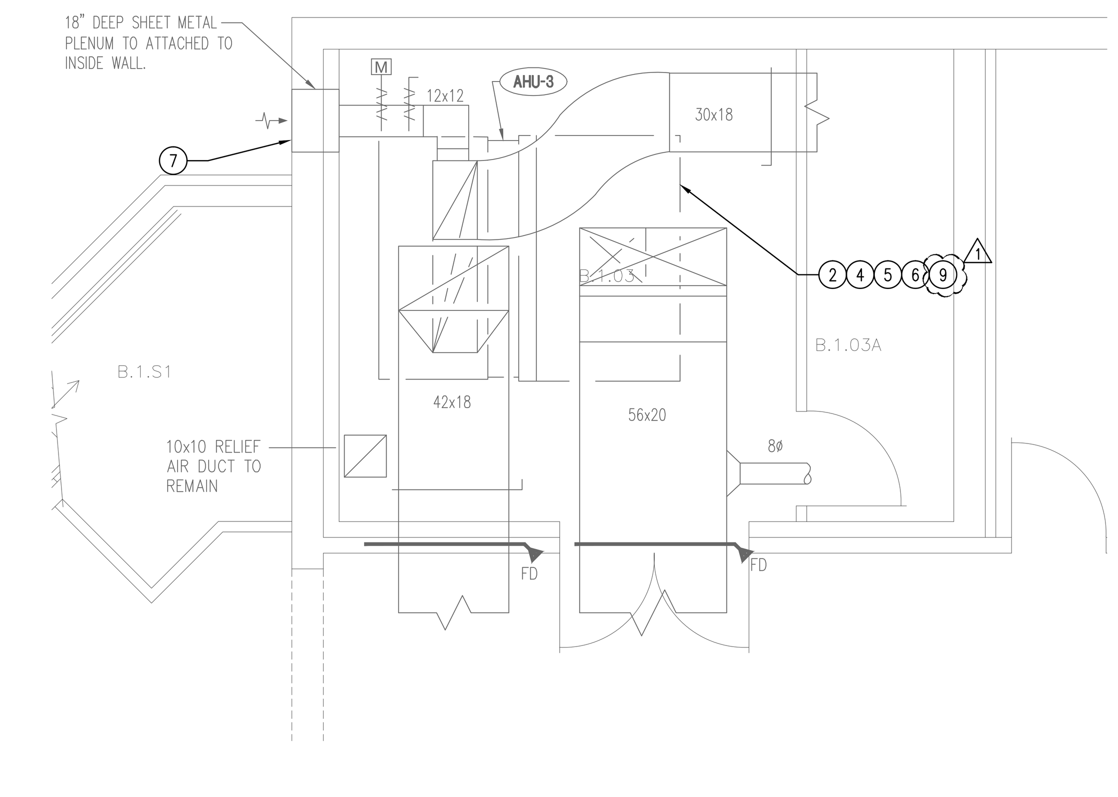

ENLARGED MECHANICAL FLOOR PLAN - 1ST FLOOR, AREA-B

SCALE: 1/4" = 1'-0"

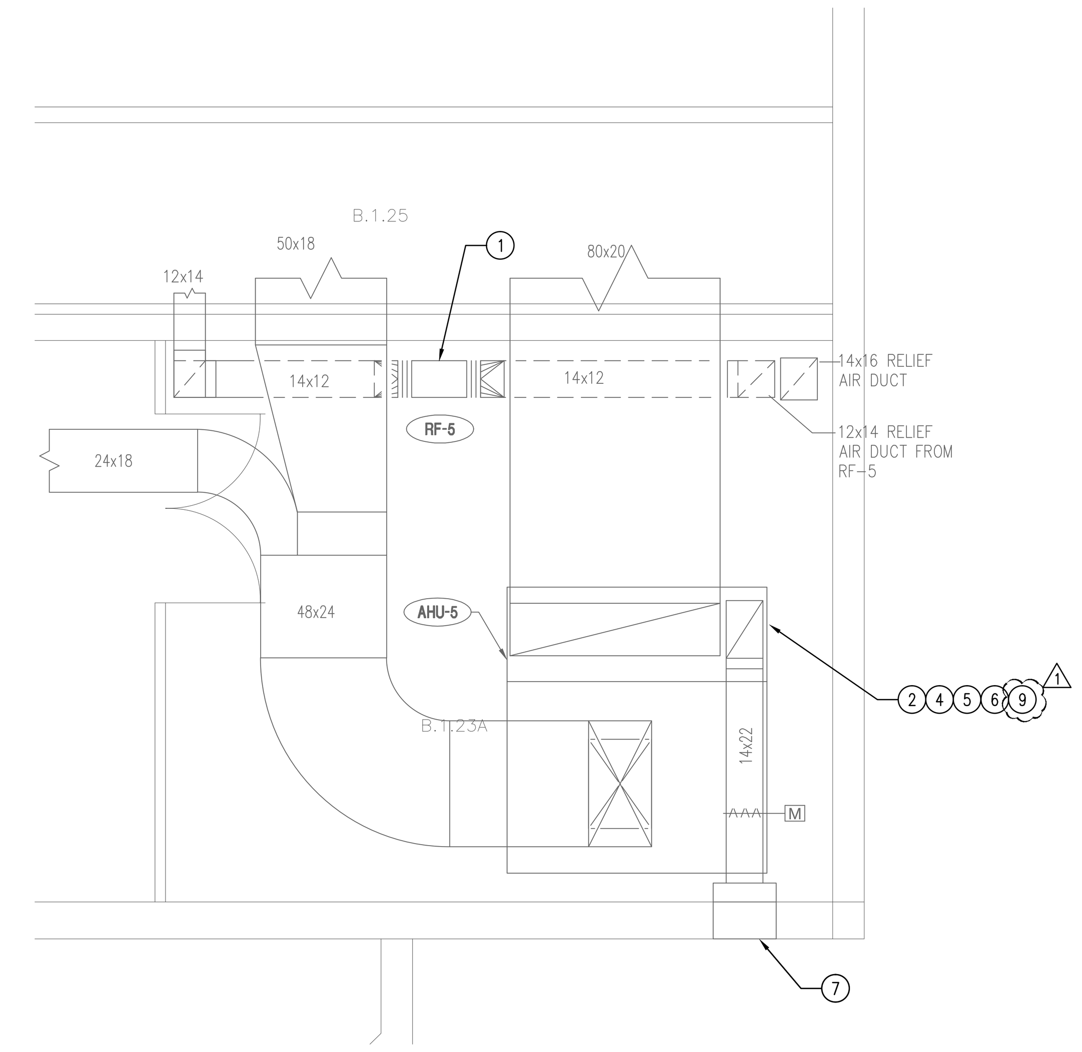

ENLARGED MECHANICAL FLOOR PLAN - 1ST FLOOR, AREA-B

SCALE: 1/4" = 1'-0"

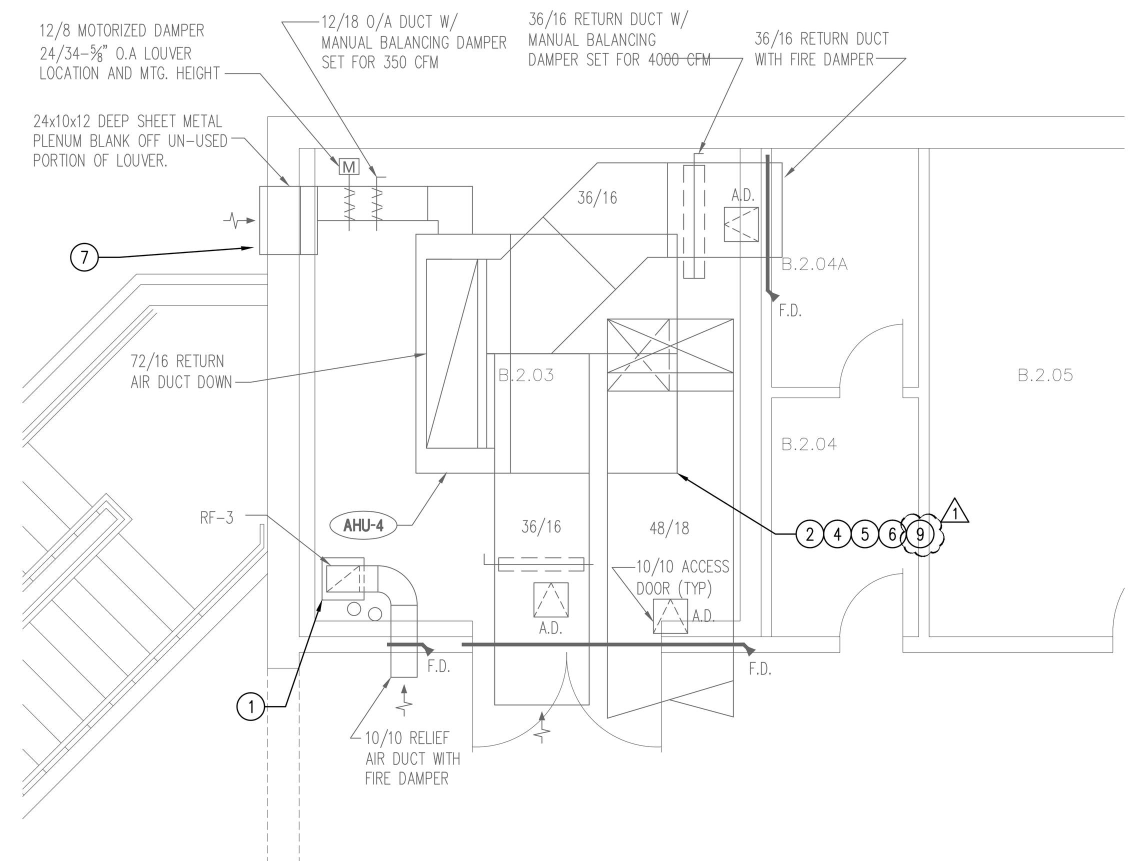

ENLARGED MECHANICAL FLOOR PLAN - 2ND FLOOR, AREA-B

SCALE: 1/4" = 1'-0"

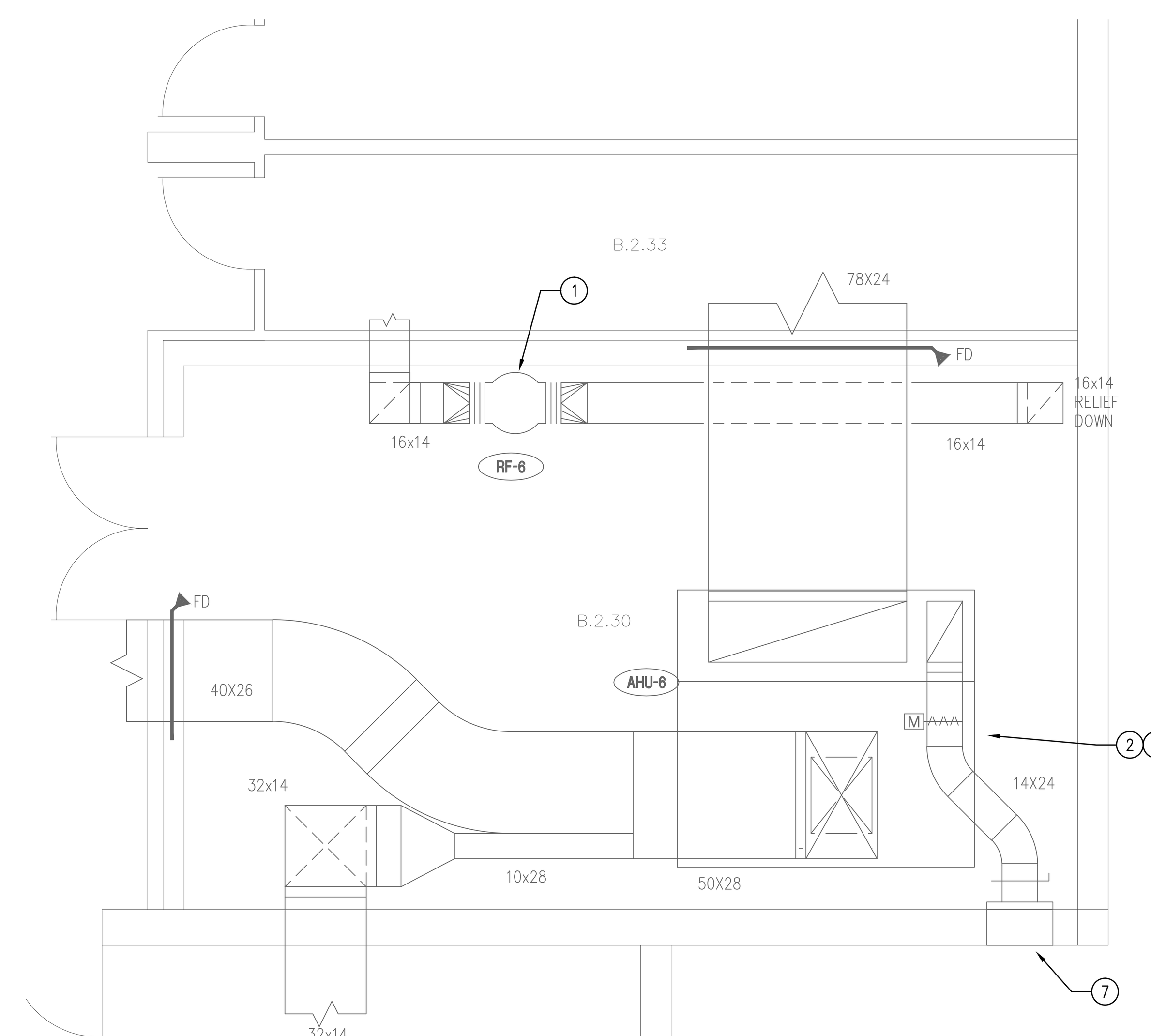

ENLARGED MECHANICAL FLOOR PLAN - 2ND FLOOR, AREA-B

SCALE: 1/4" = 1'-0"

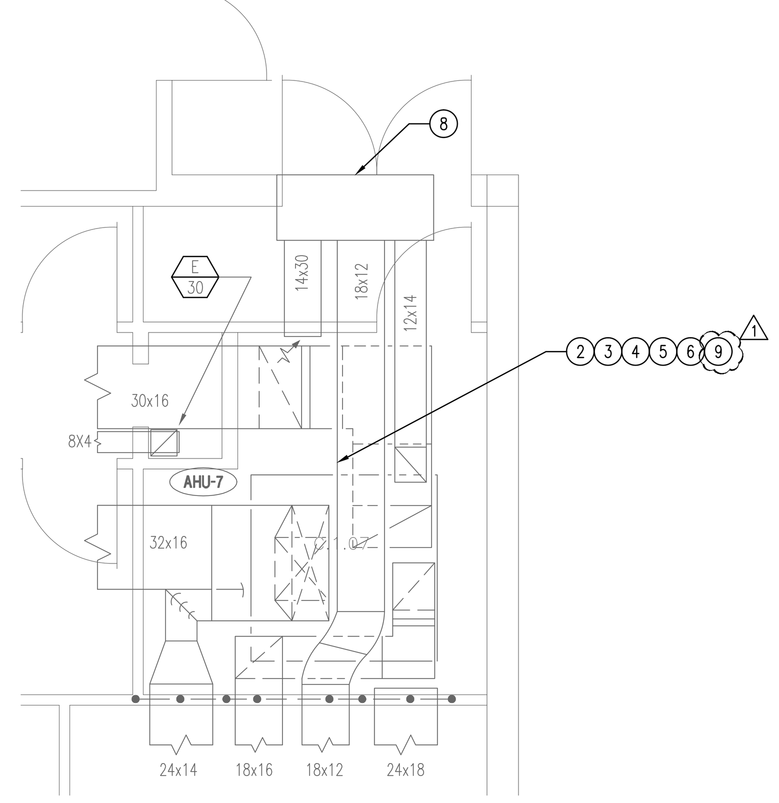

ENLARGED MECHANICAL FLOOR PLAN - 1ST FLOOR, AREA-C

SCALE: 1/4" = 1'-0"

GENERAL MECHANICAL NOTES:

1. THE DUCTWORK INDICATED ON THE FLOOR PLANS IS EXISTING. SIZES SHOWN ARE INSIDE CLEAR DIMENSIONS.
2. EXISTING DUCTWORK SHALL BE INTERNALLY CLEANED AND VACUUMED. EXISTING DUCTWORK CONSISTS OF INTERNALLY LINED SHEETMETAL. CLEAN DUCT SYSTEMS WITH HIGH POWER VACUUM MACHINES. INSTALL INSULATED ACCESS DOORS/OPENINGS INTO EXISTING DUCTWORK FOR CLEANING PURPOSES. DUCT CLEANING SHALL BE PERFORMED BY A STATE LICENSED DUCT CLEANING CONTRACTOR. CLEANING SHALL BE IN ACCORDANCE WITH THE NORTH AMERICAN INSULATION MANUFACTURERS ASSOCIATION (NAIMA) AND THE NATIONAL AIR DUCT CLEANERS ASSOCIATION (NADCA) STANDARDS AND RECOMMENDED PRACTICES.
3. AIR BALANCE THE EXISTING AIR DEVICES TO THE INDICATED AIR FLOW RATES (SUPPLY, RETURN, AND EXHAUST).
4. THE EXISTING CEILING AIR DEVICES AND THE EXISTING SIDEWALL GRILLES SHALL BE TEMPORARILY REMOVED, CLEANED AND RE-INSTALLED (SUPPLY, RETURN, AND EXHAUST). THE AIR DEVICES AND GRILLES SHALL BE CAREFULLY REMOVED AND RE-INSTALLED TO PREVENT DAMAGE TO THE AIR DEVICE/GRILLE AND TO THE SURROUNDING FINISHES. REPAIR DAMAGES TO FINISH TO MATCH EXISTING.
5. TEMPORARILY REMOVE AND RE-INSTALL EXISTING LAY-IN CEILING TILES AND GRIDS AS REQUIRED TO ACCOMMODATE THE REPLACEMENT OF THE HVAC EQUIPMENT, THE HVAC CONTROLS, AND THE CLEANING OF THE DUCTWORK. CEILING TILES AND/OR GRIDS DAMAGED DUE TO CONSTRUCTION ACTIVITIES SHALL BE REPLACED WITH NEW TO MATCH EXISTING AT NO COST TO THE OWNER OR ENGINEER.
6. REPLACE EXISTING HVAC PNEUMATIC CONTROLS SYSTEMS WITH A NEW DDC AUTOMATION SYSTEM.
7. ALL WORK SHALL BE IN ACCORDANCE WITH THE 2012 INTERNATIONAL MECHANICAL CODE AND OTHER CODES/ORDINANCES OF THE AUTHORITY HAVING JURISDICTION.
8. NOTE DELETED.
9. NEW DUCTWORK SHALL BE CONSTRUCTED OF GALVANIZED SHEETMETAL IN ACCORDANCE WITH SMACNA STANDARDS AND EXTERNALLY INSULATED AS SPECIFIED.
10. TRANSITION NEW DUCTWORK AS REQUIRED TO CONNECT TO NEW EQUIPMENT AND TO EXISTING DUCTWORK.
11. NEW HVAC EQUIPMENT MUST BE INSTALLED LEVEL, PROVIDED WITH VIBRATION ISOLATORS AND PROVIDED WITH CANVAS FLEX CONNECTION.
12. CAREFULLY PROTECT NEW EQUIPMENT AND MATERIALS PRIOR TO INSTALLATION.
13. PROVIDE MANUFACTURERS RECOMMENDED SERVICE CLEARANCE FOR NEW HVAC EQUIPMENT.
14. DRAWING DOCUMENTATION WAS OBTAINED FROM EXISTING BUILDING RECORD DRAWINGS AND FIELD SURVEY. CONTRACTOR SHALL FIELD VERIFY EXISTING CONDITIONS PRIOR TO COMMENCING WORK WITHIN PARTICULAR SPACE/AREA,
15. THE BUILDING IS TO REMAIN IN OPERATION DURING CONSTRUCTION. OUTAGES SHALL BE COORDINATED/SCHEDULED/APPROVED WITH THE OWNER AND SHALL BE KEPT TO AN ABSOLUTE MINIMUM. PERFORM NOISY OPERATIONS DURING UNOCCUPIED BUILDING HOURS.
16. CONSTRUCTION SHALL BE PHASED ON AN EQUIPMENT UNIT BASIS, SUBMIT CONSTRUCTION PHASING SCHEDULE FOR REVIEW AND APPROVAL BY OWNER AND ENGINEER. EQUIPMENT REPLACEMENT TIME SCHEDULE SHALL BE MINIMIZED BY HAVING ASSOCIATED NECESSARY PIPING, DUCTWORK, EQUIPMENT, ELECTRICAL AND CONTROLS PRE-FABRICATED AND ON-SITE PRIOR TO REMOVING EQUIPMENT ITEM. EQUIPMENT REPLACEMENT SHALL BE PERFORMED AFTER HOURS AND ON WEEKENDS/HOLIDAYS.
17. PROVIDE TEMPORARY AIR CONDITIONING EQUIPMENT (RENTAL BOILER AND CHILLER) AS REQUIRED TO MAINTAIN AIR CONDITIONING IN AFFECTED SPACES, CHILLED WATER SUPPLY TO BUILDINGS AIR HANDLING UNITS AND HOT WATER SUPPLY TO BUILDINGS TERMINAL AIR UNITS.
18. PHASE CONTROLS SYSTEM REPLACEMENT WHERE THE NEW DDC AUTOMATION SYSTEM IS INSTALLED TO OPERATE WITH THE EXISTING PNEUMATIC CONTROLS SYSTEM STILL IN OPERATION, SO THAT AS A PARTICULAR PIECE OF HVAC EQUIPMENT IS REPLACED, THE NEW REPLACEMENT EQUIPMENT CAN BE CONNECTED TO THE NEW DDC SYSTEM WHILE THE EXISTING PNEUMATIC CONTROLS SYSTEM REMAINS IN OPERATION UNTIL THE LAST PIECE OF EQUIPMENT IS FINALLY REPLACED.
19. CONTRACTOR SHALL PROVIDE PROTECTIVE COVERING OVER EXISTING FLOORING, FURNITURE AND EQUIPMENT AS REQUIRED WHEN PERFORMING WORK WITHIN AN AREA/ROOM. CONTRACTOR IS RESPONSIBLE FOR DAMAGE CAUSED TO WALL FINISHES, FLOOR FINISHES, FURNITURE AND EQUIPMENT. REPAIR DAMAGES OR REPLACE TO OWNER'S SATISFACTION AT NO ADDITIONAL COST TO THE OWNER. CONTRACTOR SHALL PROVIDE DUST BARRIERS WHERE REQUIRED TO PROHIBIT THE MIGRATION OF AIRBORNE CONSTRUCTION DUST INTO OTHER OCCUPIED AREAS.
20. CONSTRUCTION ACTIVITIES SHALL NOT IMPEDE OR OBSTRUCT THE MEANS OF EGRESS.
21. COORINATE ANY REQUIRED MOVE OR RELOCATION OF ANY OWNER EQUIPMENT AND/OR FURNITURE 7 DAYS IN ADVANCE WITH OWNER.

KEYED NOTES: (THIS SHEET ONLY)

1. EXISTING FAN AND ASSOCIATED DUCTWORK TO REMAIN. INTERFACE/CONNECT FAN TO NEW BUILDING AUTOMATION CONTROL SYSTEM.
2. EXISTING AIR HANDLING UNIT TO REMAIN. INTERIOR AND EXTERIOR OF UNIT SHALL BE CLEANED AND RE-COATED.
3. EXISTING HOT WATER COIL TO BE REMOVED FROM AIR HANDLING UNIT AND REPLACED WITH NEW. DISCONNECT AND REMOVE ASSOCIATED HOT WATER SUPPLY AND RETURN PIPING TO AIR HANDLING UNIT, INCLUDING COIL CONTROL VALVE, FROM AIR HANDLING UNIT HEATING COIL TO EXISTING RESPECTIVE ISOLATION VALVES. ISOLATION VALVES SHALL REMAIN.
4. EXISTING CHILLED WATER COIL TO BE REMOVED FROM AIR HANDLING UNIT AND REPLACED WITH NEW. DISCONNECT AND REMOVE ASSOCIATED CHILLED WATER SUPPLY AND RETURN PIPING CONNECTIONS, INCLUDING COIL CONTROL VALVE, FROM AIR HANDLING UNIT COOLING COIL TO EXISTING RESPECTIVE ISOLATION VALVES. ISOLATION VALVES SHALL REMAIN. REPLACE EXISTING DRAIN PAN WITH INSULATED STAINLESS STEEL DRAIN PAN.
5. DISCONNECT AND REMOVE ASSOCIATED CONTROLS (PNEUMATIC TUBING, CONTROL DEVICES, AND COIL CONTROL VALVES).
6. DISCONNECT AND REMOVE ASSOCIATED DUCTWORK (SUPPLY, RETURN AND OUTSIDE AIR) AND DUCT SUPPORTS/HANGERS WITHIN THE MECHANICAL ROOM. REPLACE WITH NEW DUCTWORK AS INDICATED. TRANSITION NEW DUCTWORK AS REQUIRED TO CONNECT TO EXISTING DUCTWORK.
7. EXISTING OUTSIDE AIR INTAKE WALL LOUVER TO REMAIN. REMOVE ATTACHED SHEETMETAL PLENUM. REPLACE BIRDSCREEN WITH NEW ALUMINUM TYPE. CLEAN WALL LOVER.
8. EXISTING OUTSIDE AIR LOUVER AND PLENUM TO REMAIN. REPLACE BIRDSCREEN WITH NEW ALUMINUM TYPE. CLEAN WALL LOUVER.
9. EXISTING SUPPLY FAN MOTOR SHALL BE REMOVED AND REPLACED WITH NEW PREMIUM EFFICIENCY INVERTER DUTY MOTOR.

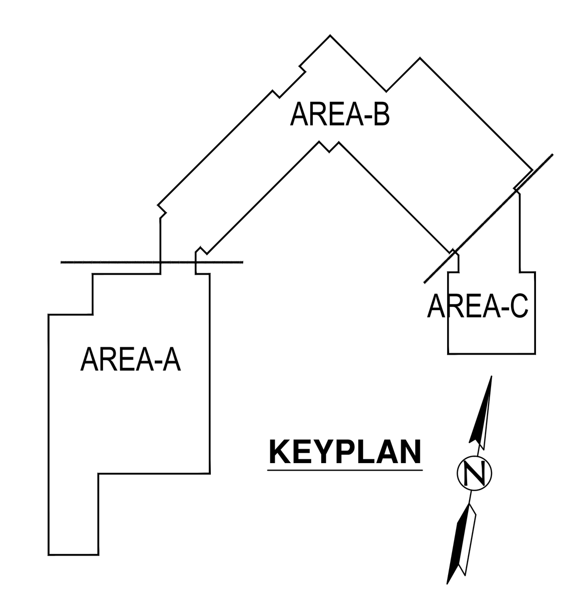

KEYPLAN

REVISIONS:
1 ADDENDUM #4, 7-11-2013

THESE DRAWINGS, ACCOMPANYING SPECIFICATIONS AND OTHER DOCUMENTS PREPARED BY THE ENGINEER FOR THIS PROJECT ARE INSTRUMENTS OF THE ENGINEER'S SERVICE FOR USE SOLELY WITH RESPECT TO THIS PROJECT AND, UNLESS OTHERWISE PROVIDED, THE ENGINEER SHALL BE DEEMED THE AUTHOR OF THESE DOCUMENTS AND SHALL RETAIN ALL COMMON LAW, STATUTORY AND OTHER RESERVED RIGHTS, INCLUDING THE COPYRIGHT. DUPLICATION OF ANY PART OR IN WHOLE OF THESE DOCUMENTS IN ANY FORM UNLESS AUTHORIZED BY CONTRACT OR OTHER WRITTEN DOCUMENT IS STRICTLY PROHIBITED BY LAW.

STATE OF TEXAS
HECTOR M. CARRISALEZ
64007
LICENSED
PROFESSIONAL ENGINEER
7-11-2013
Alderson & Associates, Inc.
F-1008

Alderson & Associates, Inc.
Consulting Engineers
7700 Torino
Suite 101
San Antonio, TX 78229
Phone (210) 614-1110
Fax (210) 615-8549
© 2012 Alderson and Associates Inc
F-1008
PROJECT # 12149

HVAC EQUIPMENT UPGRADES AND CONTROL SYSTEM UPGRADES
POLICE TRAINING ACADEMY 12200 SE LOOP 410
CITY OF SAN ANTONIO

ENLARGED MECHANICAL FLOOR PLANS - DEMOLITION

PROJECT: 12149
DRAWN: AAI
CHECKED: AAI
DATE: 2013-06-12

SHEET
MD1.1
OF:

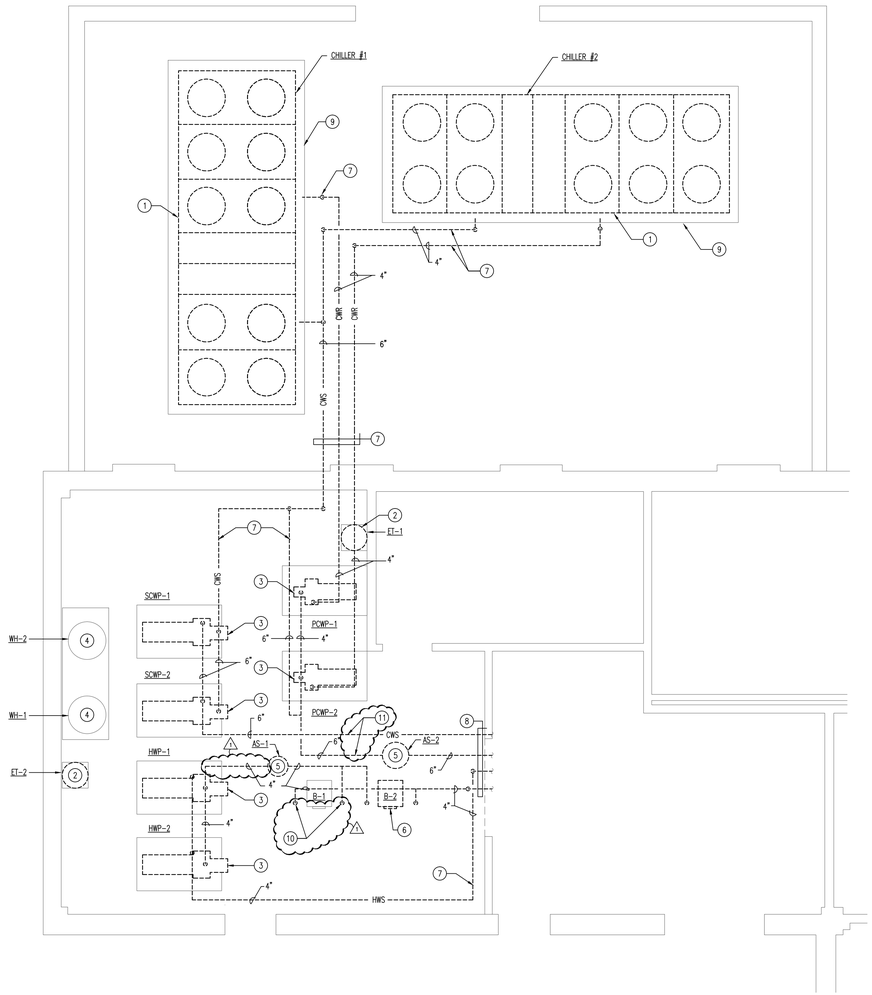

1 ENLARGED MECHANICAL ROOM & CHILLER YARD - DEMOLITION

SCALE: 1/4" = 1'-0"

KEYED NOTES: (THIS SHEET ONLY)

1. EXISTING CHILLER TO BE REMOVED. DISCONNECT WATER, ELECTRICAL, AND CONTROL CONNECTIONS.
2. EXISTING EXPANSION TANK TO BE REMOVED. HOUSEKEEPING PAD IS TO REMAIN.
3. EXISTING PUMP TO BE REMOVED. HOUSEKEEPING PAD IS TO REMAIN.
4. EXISTING WATER HEATER TO REMAIN.
5. EXISTING AIR/DIRT SEPARATOR TO BE REMOVED.
6. EXISTING BOILER TO BE REMOVED. DISCONNECT ALL WATER, ELECTRICAL, AND CONTROL CONNECTIONS.
7. EXISTING PIPING TO BE REMOVED.
8. REMOVE PIPING TO THIS LOCATION AND CAP PIPING. REFER TO NEW WORK FOR NEW PIPING LAYOUT.
9. EXISTING CHILLER CONCRETE PAD TO REMAIN.
10. EXISTING HOT WATER PIPING FROM BOILER TO FLANGE TO REMAIN.
11. EXISTING CHILLER TAPS TO REMAIN DURING DEMOLITION OF PIPING IN MECHANICAL ROOM. AFTER NEW EQUIPMENT AND PIPING IS INSTALLED, THE TAPS AND EXISTING AIR/DIRT SEPARATOR MAY BE REMOVED.

GENERAL MECHANICAL NOTES:

1. THE DUCTWORK INDICATED ON THE FLOOR PLANS IS EXISTING. SIZES SHOWN ARE INSIDE CLEAR DIMENSIONS.
2. EXISTING DUCTWORK SHALL BE INTERNALLY CLEANED AND VACUUMED. EXISTING DUCTWORK CONSISTS OF INTERNALLY LINED SHEETMETAL. CLEAN DUCT SYSTEMS WITH HIGH POWER VACUUM MACHINES. INSTALL INSULATED ACCESS DOORS/OPENINGS INTO EXISTING DUCTWORK FOR CLEANING PURPOSES. DUCT CLEANING SHALL BE PERFORMED BY A STATE LICENSED DUCT CLEANING CONTRACTOR. CLEANING SHALL BE IN ACCORDANCE WITH THE NORTH AMERICAN INSULATION MANUFACTURERS ASSOCIATION (NAIMA) AND THE NATIONAL AIR DUCT CLEANERS ASSOCIATION (NADCA) STANDARDS AND RECOMMENDED PRACTICES.
3. AIR BALANCE THE EXISTING AIR DEVICES TO THE INDICATED AIR FLOW RATES.
4. THE EXISTING CEILING AIR DEVICES AND THE EXISTING SIDEWALL GRILLES SHALL BE TEMPORARILY REMOVED, CLEANED AND RE-INSTALLED. THE AIR DEVICES AND GRILLES SHALL BE CAREFULLY REMOVED AND RE-INSTALLED TO PREVENT DAMAGE TO THE AIR DEVICE/GRILLE AND TO THE SURROUNDING FINISHES.
5. TEMPORARILY REMOVE AND RE-INSTALL EXISTING LAY-IN CEILING TILES AND GRIDS AS REQUIRED TO ACCOMMODATE THE REPLACEMENT OF THE HVAC EQUIPMENT, THE HVAC CONTROLS, THE CLEANING OF THE DUCTWORK AND THE FLUSHING OF THE CHILLED WATER AND HOT WATER HYDRONIC PIPING. CEILING TILES AND/OR GRIDS DAMAGED DUE TO CONSTRUCTION ACTIVITIES SHALL BE REPLACED WITH NEW TO MATCH EXISTING AT COST TO THE OWNER.
6. REPLACE EXISTING HVAC PNEUMATIC CONTROLS SYSTEMS WITH A NEW DDC AUTOMATION SYSTEM.
7. ALL WORK SHALL BE IN ACCORDANCE WITH THE 2012 INTERNATIONAL MECHANICAL CODE AND OTHER CODES/ORDINANCES OF THE AUTHORITY HAVING JURISDICTION.
8. NOTE DELETED.
9. TRANSITION NEW DUCTWORK AS REQUIRED TO CONNECT TO NEW EQUIPMENT AND TO EXISTING DUCTWORK.
10. NEW HVAC EQUIPMENT MUST BE INSTALLED LEVEL, PROVIDED WITH VIBRATION ISOLATORS AND PROVIDED WITH CANVAS FLEX CONNECTION.
11. CAREFULLY PROTECT NEW EQUIPMENT AND MATERIALS PRIOR TO INSTALLATION.
12. PROVIDE MANUFACTURERS RECOMMENDED SERVICE CLEARANCE FOR NEW HVAC EQUIPMENT.
13. DRAWING DOCUMENTATION WAS OBTAINED FROM EXISTING BUILDING RECORD DRAWINGS AND FIELD SURVEY. CONTRACTOR SHALL FIELD VERIFY EXISTING CONDITIONS PRIOR TO COMMENCING WORK WITHIN PARTICULAR SPACE/AREA.
14. THE BUILDING IS TO REMAIN IN OPERATION DURING CONSTRUCTION. OUTAGES SHALL BE COORDINATED/SCHEDULED/APPROVED WITH THE OWNER AND SHALL BE KEPT TO AN ABSOLUTE MINIMUM. PERFORM NOISY OPERATIONS DURING UNOCCUPIED BUILDING HOURS.
15. CONSTRUCTION SHALL BE PAHSED ON AN EQUIPMENT UNIT BASIS, SUBMIT CONSTRUCTION PHASING SCHEDULE FOR REVIEW AND APPROVAL BY OWNER. EQUIPMENT REPLACEMENT TIME SCHEDULE SHALL BE MINIMIZED BY HAVING ASSOCIATED NECESSARY PIPING, DUCTWORK, ELECTRICAL AND CONTROLS PRE-FABRICATED AND ON-SITE PRIOR TO REMOVING EQUIPMENT ITEM. EQUIPMENT REPLACEMENT SHALL BE PERFORMED AFTER HOURS AND ON WEEKENDS/HOLIDAYS.
16. PROVIDE TEMPORARY AIR CONDITIONING EQUIPMENT AS REQUIRED TO MAINTAIN AIR CONDITIONING IN AFFECTED SPACES, CHILLED WATER SUPPLY TO BUILDINGS AIR HANDLING UNITS AND HOT WATER SUPPLY TO BUILDINGS TERMINAL AIR UNITS.
17. PHASE CONTROLS SYSTEM REPLACEMENT WHERE THE NEW DDC AUTOMATION SYSTEM IS INSTALLED TO OPERATE WITH THE EXISTING PNEUMATIC CONTROLS SYSTEM STILL IN OPERATION, SO THAT AS A PARTICULAR PIECE OF HVAC EQUIPMENT IS REPLACED, THE NEW REPLACEMENT EQUIPMENT CAN BE CONNECTED TO THE NEW DDC SYSTEM WHILE THE EXISTING PNEUMATIC CONTROLS SYSTEM REMAINS IN OPERATION UNTIL THE LAST PIECE OF EQUIPMENT IS FINALLY REPLACED.
18. CONTRACTOR SHALL PROVIDE PROTECTIVE COVERING OVER EXISTING FLOORING, FURNITURE AND EQUIPMENT AS REQUIRED WHEN PERFORMING WORK WITHIN AN AREA/ROOM. CONTRACTOR IS RESPONSIBLE FOR DAMAGE CAUSED TO WALL FINISHES, FLOOR FINISHES, FURNITURE AND EQUIPMENT. REPAIR DAMAGES OR REPLACE TO OWNER'S SATISFACTION AT NO ADDITIONAL COST TO THE OWNER. CONTRACTOR SHALL PROVIDE DUST BARRIERS WHERE REQUIRED TO PROHIBIT THE MIGRATION OF AIRBORNE CONSTRUCTION DUST INTO TO OTHER OCCUPIED AREAS.
19. CONSTRUCTION ACTIVITIES SHALL NOT IMPEDE OR OBSTRUCT THE MEANS OF EGRESS.
20. COORINATE ANY REQUIRED MOVE OR RELOCATION OF ANY OWNER EQUIPMENT AND/OR FURNITURE 7 DAYS IN ADVANCE WITH OWNER.

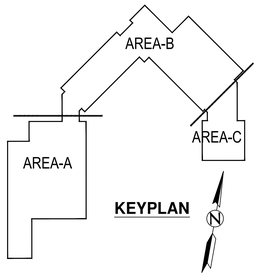

REVISIONS:
1 ADDENDUM #4, 7-11-2013

NOTE DRAWINGS, ACCOMPANYING SPECIFICATIONS AND OTHER DOCUMENTS PREPARED BY THE ARCHITECT AS AN INSTRUMENT OF SERVICE ARE THE PROPERTY OF THE ARCHITECT AND ARE TO BE USED WITH RESPECT TO THIS PROJECT ONLY. ALDERSON & ASSOCIATES, INC. ASSUMES NO RESPONSIBILITY FOR ALTERATIONS TO THESE DOCUMENTS BY OTHERS AFTER THEY LEAVE OUR OFFICE. DRAWINGS AND OTHER RESERVED RIGHTS, INCLUDING THE STATUTORY COPYRIGHT, ARE RETAINED BY THE ARCHITECT. WHOLE OR PARTIAL DOCUMENTS IN ANY FORM UNLESS AUTHORIZED BY CONTRACT OR OTHER WRITTEN DOCUMENT IS STRICTLY PROHIBITED BY LAW.

STATE OF TEXAS
HECTOR M. CARRISALEZ
64007
LICENSED PROFESSIONAL ENGINEER
7-11-2013

Alderson & Associates, Inc.
F-1008

Alderson & Associates, Inc.
Consulting Engineers
7700 Torino
Suite 101
San Antonio, TX 78229
Phone (210) 614-1410
Fax (210) 614-1412
© 2012 Alderson and Associates Inc
F-1008

PROJECT # 12149

HVAC EQUIPMENT UPGRADES AND CONTROL SYSTEM UPGRADES
POLICE TRAINING ACADEMY 12200 SE LOOP 410
CITY OF SAN ANTONIO

ENLARGED MECHANICAL ROOM & CHILLER YARD - DEMOLITION

PROJECT:	12149
DRAWN:	AAI
CHECKED:	AAI
DATE:	2013-06-12

SHEET
MD1.2
OF:

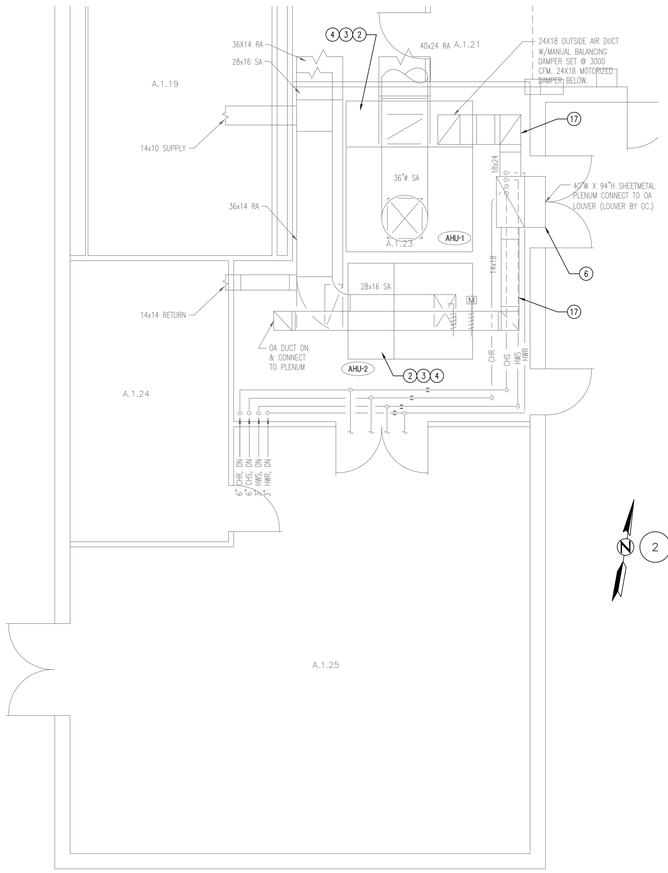

1 ENLARGED MECHANICAL FLOOR PLAN - 1ST FLOOR, AREA-A

SCALE: 1/4" = 1'-0"

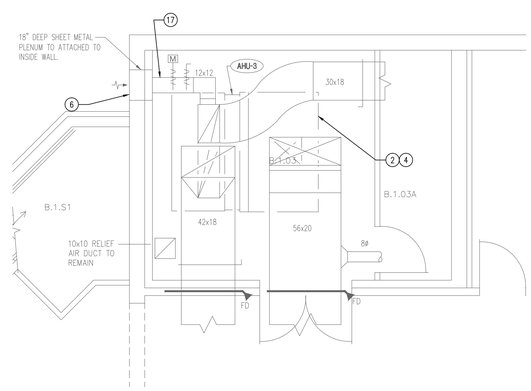

2 ENLARGED MECHANICAL FLOOR PLAN - 1ST FLOOR, AREA-B

SCALE: 1/4" = 1'-0"

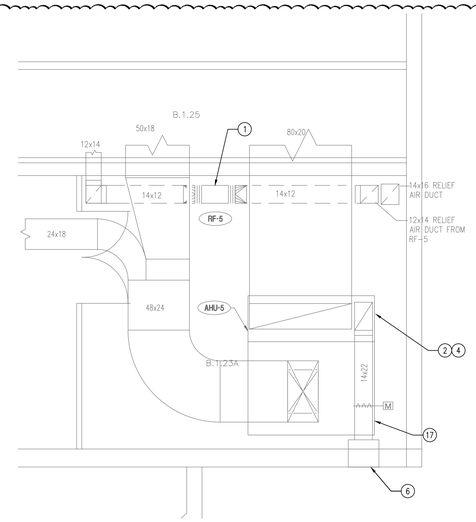

3 ENLARGED MECHANICAL FLOOR PLAN - 1ST FLOOR, AREA-B

SCALE: 1/4" = 1'-0"

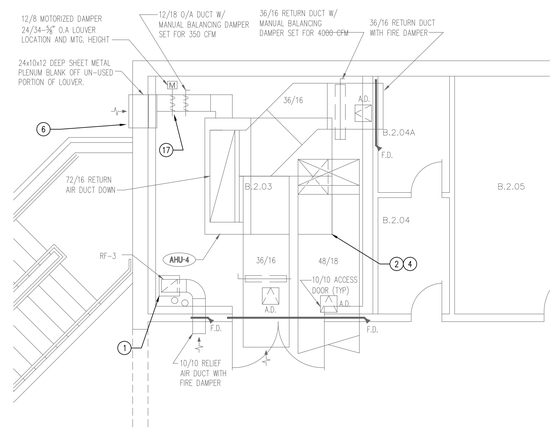

4 ENLARGED MECHANICAL FLOOR PLAN - 2ND FLOOR, AREA-B

SCALE: 1/4" = 1'-0"

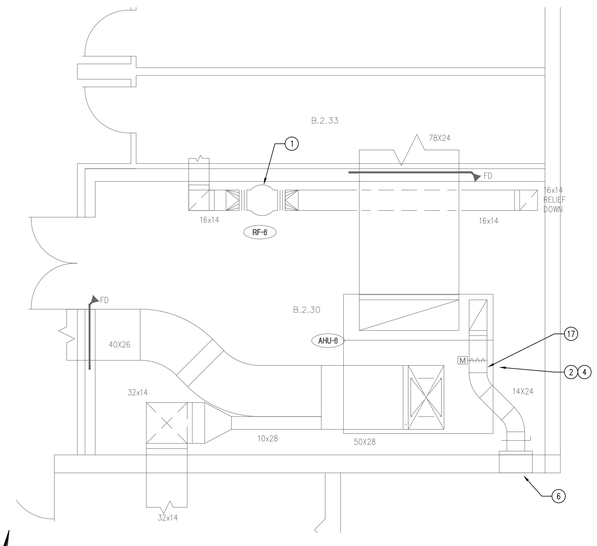

5 ENLARGED MECHANICAL FLOOR PLAN - 2ND FLOOR, AREA-B

SCALE: 1/4" = 1'-0"

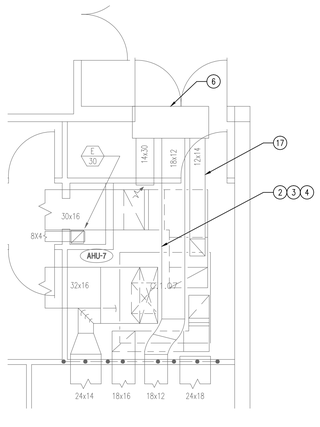

6 ENLARGED MECHANICAL FLOOR PLAN - 1ST FLOOR, AREA-C

SCALE: 1/4" = 1'-0"

GENERAL MECHANICAL NOTES:

1. THE DUCTWORK INDICATED ON THE FLOOR PLANS IS EXISTING. SIZES SHOWN ARE INSIDE CLEAR DIMENSIONS.
2. EXISTING DUCTWORK SHALL BE INTERNALLY CLEANED AND VACUUMED. EXISTING DUCTWORK CONSISTS OF INTERNALLY LINED SHEETMETAL. CLEAN DUCT SYSTEMS WITH HIGH POWER VACUUM MACHINES. INSTALL INSULATED ACCESS DOORS/OPENINGS INTO EXISTING DUCTWORK FOR CLEANING PURPOSES. DUCT CLEANING SHALL BE PERFORMED BY A STATE LICENSED DUCT CLEANING CONTRACTOR. CLEANING SHALL BE IN ACCORDANCE WITH THE NORTH AMERICAN INSULATION MANUFACTURERS ASSOCIATION (NAIMA) AND THE NATIONAL AIR DUCT CLEANERS ASSOCIATION (NADCA) STANDARDS AND RECOMMENDED PRACTICES.
3. AIR BALANCE THE EXISTING AIR DEVICES TO THE INDICATED AIR FLOW RATES (SUPPLY, RETURN, AND EXHAUST).
4. THE EXISTING CEILING AIR DEVICES AND THE EXISTING SIDEWALL GRILLES SHALL BE TEMPORARILY REMOVED, CLEANED AND RE-INSTALLED (SUPPLY, RETURN, AND EXHAUST). THE AIR DEVICES AND GRILLES SHALL BE CAREFULLY REMOVED AND RE-INSTALLED TO PREVENT DAMAGE TO THE AIR DEVICE/GRILLE AND TO THE SURROUNDING FINISHES. REPAIR DAMAGES TO FINISH TO MATCH EXISTING.
5. TEMPORARILY REMOVE AND RE-INSTALL EXISTING LAY-IN CEILING TILES AND GRIDS AS REQUIRED TO ACCOMMODATE THE REPLACEMENT OF THE HVAC EQUIPMENT, THE HVAC CONTROLS, AND THE CLEANING OF THE DUCTWORK. CEILING TILES AND/OR GRIDS DAMAGED DUE TO CONSTRUCTION ACTIVITIES SHALL BE REPLACED WITH NEW TO MATCH EXISTING AT NO COST TO THE OWNER OR ENGINEER.
6. REPLACE EXISTING HVAC PNEUMATIC CONTROLS SYSTEMS WITH A NEW DDC AUTOMATION SYSTEM.
7. ALL WORK SHALL BE IN ACCORDANCE WITH THE 2012 INTERNATIONAL MECHANICAL CODE AND OTHER CODES/ORDINANCES OF THE AUTHORITY HAVING JURISDICTION.
8. NOTE DELETED.
9. NEW DUCTWORK SHALL BE CONSTRUCTED OF GALVANIZED SHEETMETAL IN ACCORDANCE WITH SMACNA STANDARDS AND EXTERNALLY INSULATED AS SPECIFIED.
10. TRANSITION NEW DUCTWORK AS REQUIRED TO CONNECT TO NEW EQUIPMENT AND TO EXISTING DUCTWORK.
11. NEW HVAC EQUIPMENT MUST BE INSTALLED LEVEL, PROVIDED WITH VIBRATION ISOLATORS AND PROVIDED WITH CANVAS FLEX CONNECTION.
12. CAREFULLY PROTECT NEW EQUIPMENT AND MATERIALS PRIOR TO INSTALLATION.
13. PROVIDE MANUFACTURERS RECOMMENDED SERVICE CLEARANCE FOR NEW HVAC EQUIPMENT.
14. DRAWING DOCUMENTATION WAS OBTAINED FROM EXISTING BUILDING RECORD DRAWINGS AND FIELD SURVEY. CONTRACTOR SHALL FIELD VERIFY EXISTING CONDITIONS PRIOR TO COMMENCING WORK WITHIN PARTICULAR SPACE/AREA.
15. THE BUILDING IS TO REMAIN IN OPERATION DURING CONSTRUCTION. OUTAGES SHALL BE COORDINATED/SCHEDULED/APPROVED WITH THE OWNER AND SHALL BE KEPT TO AN ABSOLUTE MINIMUM. PERFORM NOISY OPERATIONS DURING UNOCCUPIED BUILDING HOURS.
16. CONSTRUCTION SHALL BE PHASED ON AN EQUIPMENT UNIT BASIS, SUBMIT CONSTRUCTION PHASING SCHEDULE FOR REVIEW AND APPROVAL BY OWNER AND ENGINEER. EQUIPMENT REPLACEMENT TIME SCHEDULE SHALL BE MINIMIZED BY HAVING ASSOCIATED NECESSARY PIPING, DUCTWORK, EQUIPMENT, ELECTRICAL AND CONTROLS PRE-FABRICATED AND ON-SITE PRIOR TO REMOVING EQUIPMENT ITEM. EQUIPMENT REPLACEMENT SHALL BE PERFORMED AFTER HOURS AND ON WEEKENDS/HOLIDAYS.
17. PROVIDE TEMPORARY AIR CONDITIONING EQUIPMENT (RENTAL BOILER AND CHILLER) AS REQUIRED TO MAINTAIN AIR CONDITIONING IN AFFECTED SPACES, CHILLED WATER SUPPLY TO BUILDINGS AIR HANDLING UNITS AND HOT WATER SUPPLY TO BUILDINGS TERMINAL AIR UNITS.
18. PHASE CONTROLS SYSTEM REPLACEMENT WHERE THE NEW DDC AUTOMATION SYSTEM IS INSTALLED TO OPERATE WITH THE EXISTING PNEUMATIC CONTROLS SYSTEM STILL IN OPERATION, SO THAT AS A PARTICULAR PIECE OF HVAC EQUIPMENT IS REPLACED, THE NEW REPLACEMENT EQUIPMENT CAN BE CONNECTED TO THE NEW DDC SYSTEM WHILE THE EXISTING PNEUMATIC CONTROLS SYSTEM REMAINS IN OPERATION UNTIL THE LAST PIECE OF EQUIPMENT IS FINALLY REPLACED.
19. CONTRACTOR SHALL PROVIDE PROTECTIVE COVERING OVER EXISTING FLOORING, FURNITURE AND EQUIPMENT AS REQUIRED WHEN PERFORMING WORK WITHIN AN AREA/ROOM. CONTRACTOR IS RESPONSIBLE FOR DAMAGE CAUSED TO WALL FINISHES, FLOOR FINISHES, FURNITURE AND EQUIPMENT. REPAIR DAMAGES OR REPLACE TO OWNER'S SATISFACTION AT NO ADDITIONAL COST TO THE OWNER. CONTRACTOR SHALL PROVIDE DUST BARRIERS WHERE REQUIRED TO PROHIBIT THE MIGRATION OF AIRBORNE CONSTRUCTION DUST INTO OTHER OCCUPIED AREAS.
20. CONSTRUCTION ACTIVITIES SHALL NOT IMPEDE OR OBSTRUCT THE MEANS OF EGRESS.
21. COORINATE ANY REQUIRED MOVE OR RELOCATION OF ANY OWNER EQUIPMENT AND/OR FURNITURE 7 DAYS IN ADVANCE WITH OWNER.

KEYED NOTES: (THIS SHEET ONLY)

1. EXISTING FAN TO REMAIN. INTERFACE/CONNECT FAN TO NEW BUILDING AUTOMATION CONTROL SYSTEM.
2. PROVIDE NEW INSULATED STAINLESS STEEL DRAIN PAN. PROVIDE NEW INSULATED CONDENSATE DRAIN LINE FULL SIZE OF UNIT CONNECTION, WITH P-TRAP. ROUTE DRAIN LINE TO NEAREST FLOOR DRAIN.
3. RECONNECT HOT WATER SUPPLY AND RETURN PIPING FROM ISOLATION VALVES TO NEW HEATING COIL CONNECTION ON AIR HANDLING UNIT. PROVIDE NEW ELECTRONIC CONTROL VALVES . REFER TO DETAIL SHEET FOR TYPICAL COIL PIPING DETAIL.
4. RECONNECT CHILLED WATER SUPPLY AND RETURN PIPING FROM ISOLATION VALVES TO NEW COOLING COIL CONNECTION ON AIR HANDLING UNIT. PROVIDE NEW ELECTRONIC CONTROL VALVES. REFER TO DETAIL SHEET FOR TYPICAL COIL PIPING DETAIL.
5. NOTE DELETED.
6. EXISTING LOUVER TO REMAIN. CONTRACTOR SHALL CLEAN DEBRIS OUT OF LOUVER AND INSTALL NEW BIRDSCREEN.
7. NOTE DELETED
8. NOTE DELETED.
9. NOTE DELETED.
10. NOTE DELETED.
11. NOTE DELETED.
12. CONNECT NEW OUTSIDE AIR DUCT FROM EXISTING LOUVER.
13. NOTE DELETED.
14. NOTE DELETED.
15. NOTE DELETED.
16. NOTE DELETED.
17. APPROXIMATE LOCATION OF NEW AIR FLOW MEASURING STATION. REFER TO MANUFACTURER'S RECOMMENDATIONS FOR MOUNTING LOCATION. MOUNT MOTORIZED DAMPER A MINIMUM OF 6" DOWNSTREAM OF AIR FLOW MEASURING STATION. CONTACT MIKE LAWLOR @ HOLLAND EQUIPMENT COMPANY (210)341-2277. MODIFY EXISTING OA DUCT AS REQUIRED TO ACCOMMODATE NEW AIR FLOW MEASURING STATION ASSEMBLY. TRANSITION DUCT AS REQUIRED TO CONNECT TO EXISTING DUCTWORK.
18. NOTE DELETED.
19. NOTE DELETED.

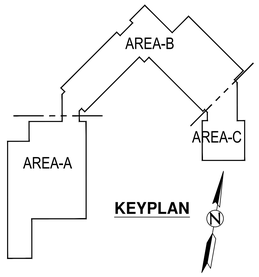

REVISIONS:
1 ADDENDUM #4, 7-11-2013

NOTE DRAWINGS, ACCOMPANYING SPECIFICATIONS AND OTHER DOCUMENTS PREPARED BY THE ARCHITECT AS AN INSTRUMENT OF SERVICE ARE THE PROPERTY OF THE ARCHITECT SERVED FOR USE SOLELY WITH RESPECT TO THIS PROJECT AND, UNLESS OTHERWISE PROVIDED FROM THE ARCHITECT, THE DRAWINGS, SPECIFICATIONS, OR OTHER DOCUMENTS ARE TO BE RETURNED UPON REQUEST. ALL RIGHTS AND OTHER RESERVED RIGHTS, INCLUDING ANY COPYRIGHT, ARE RETAINED BY THE ARCHITECT. THE WHOLE OR THOSE DOCUMENTS IN ANY FORM UNLESS AUTHORIZED BY CONTRACT OR OTHER WRITTEN DOCUMENT IS STRICTLY PROHIBITED BY LAW.

STATE OF TEXAS
HECTOR M. CARRISALEZ
64007
LICENSED PROFESSIONAL ENGINEER
7-11-2013
Alderson & Associates, Inc.
F-1008

Alderson & Associates, Inc.
Consulting Engineers
7700 Torino
Suite 101
San Antonio, TX 78229
Phone (210) 614-1310
Fax (210) 614-1312
PROJECT # 12149
© 2012 Alderson and Associates Inc
F-1008

HVAC EQUIPMENT UPGRADES AND CONTROL SYSTEM UPGRADES
POLICE TRAINING ACADEMY 12200 SE LOOP 410
CITY OF SAN ANTONIO

ENLARGED MECHANICAL FLOOR PLANS

PROJECT:	12149
DRAWN:	AAI
CHECKED:	AAI
DATE:	2013-06-12

SHEET
M1.6
OF:

VAV TERMINAL UNIT SCHEDULE

MARK	TYPE	BOX SIZE	INLET SIZE (IN)	INLET PRESSURE (IN. W.G.)	MAX. PRIMARY AIR (CFM)	MIN. PRIMARY AIR (CFM)	FAN AIRFLOW (CFM)	FAN E.S.P. (IN. W.G.)	FAN MOTOR SIZE (HP)	FAN VOLTS/PHASE	HEATING COIL HEATING CFM	HEATING COIL EAT (F)	HEATING COIL LAT (F)	HEATING COIL MIN. HEATING CAP. (MBH)	HEATING COIL GPM	HEATING COIL EWT (F)	HEATING COIL LWT (F)	MANUFACTURER	MODEL	NOTES
FPU-1	PARALLEL FAN POWERED	1011	10	0.75	1,440	432	720	0.30	1/2	277/1	720	70	103.0	25.7	2.6	160	140	JCI / ENVIRO-TEC	TVS	1,2,3,4,5
FPU-2	PARALLEL FAN POWERED	0806	8	0.75	720	216	360	0.30	1/3	277/1	360	70	103.0	12.8	1.3	160	140	JCI / ENVIRO-TEC	TVS	1,2,3,4,5
FPU-3	PARALLEL FAN POWERED	1011	10	0.75	1,200	360	600	0.30	1/2	277/1	600	70	103.0	21.4	2.1	160	140	JCI / ENVIRO-TEC	TVS	1,2,3,4,5
FPU-4	PARALLEL FAN POWERED	0811	8	0.75	940	282	470	0.30	1/2	277/1	470	70	103.0	16.8	1.7	160	140	JCI / ENVIRO-TEC	TVS	1,2,3,4,5
FPU-5	PARALLEL FAN POWERED	0806	8	0.75	700	210	350	0.30	1/3	277/1	350	70	103.0	12.5	1.2	160	140	JCI / ENVIRO-TEC	TVS	1,2,3,4,5
FPU-6	PARALLEL FAN POWERED	1011	10	0.75	1,240	372	620	0.30	1/2	277/1	620	70	103.0	22.1	2.2	160	140	JCI / ENVIRO-TEC	TVS	1,2,3,4,5
FPU-7	PARALLEL FAN POWERED	1011	10	0.75	1,200	360	600	0.30	1/2	277/1	600	70	103.0	21.4	2.1	160	140	JCI / ENVIRO-TEC	TVS	1,2,3,4,5
FPU-8	PARALLEL FAN POWERED	0606	6	0.75	360	108	180	0.30	1/3	277/1	180	70	103.0	6.4	0.6	160	140	JCI / ENVIRO-TEC	TVS	1,2,3,4,5
FPU-9	PARALLEL FAN POWERED	1011	10	0.75	1,200	360	600	0.30	1/2	277/1	600	70	103.0	21.4	2.1	160	140	JCI / ENVIRO-TEC	TVS	1,2,3,4,5
FPU-10	PARALLEL FAN POWERED	1011	10	0.75	1,350	405	675	0.30	1/2	277/1	675	70	103.0	24.1	2.4	160	140	JCI / ENVIRO-TEC	TVS	1,2,3,4,5
FPU-11	PARALLEL FAN POWERED	1411	14	0.75	1,700	510	850	0.30	1/2	277/1	850	70	103.0	30.3	3.0	160	140	JCI / ENVIRO-TEC	TVS	1,2,3,4,5
FPU-12	PARALLEL FAN POWERED	1011	10	0.75	1,410	423	705	0.30	1/2	277/1	705	70	103.0	25.1	2.5	160	140	JCI / ENVIRO-TEC	TVS	1,2,3,4,5
FPU-13	PARALLEL FAN POWERED	1011	10	0.75	1,300	390	650	0.30	1/2	277/1	650	70	103.0	23.2	2.3	160	140	JCI / ENVIRO-TEC	TVS	1,2,3,4,5
FPU-14	PARALLEL FAN POWERED	0806	8	0.75	570	171	285	0.30	1/3	277/1	285	70	103.0	10.2	1.0	160	140	JCI / ENVIRO-TEC	TVS	1,2,3,4,5
FPU-15	PARALLEL FAN POWERED	1011	10	0.75	1,300	390	650	0.30	1/2	277/1	650	70	103.0	23.2	2.3	160	140	JCI / ENVIRO-TEC	TVS	1,2,3,4,5
FPU-16	PARALLEL FAN POWERED	1011	10	0.75	1,200	360	600	0.30	1/2	277/1	600	70	103.0	21.4	2.1	160	140	JCI / ENVIRO-TEC	TVS	1,2,3,4,5
FPU-17	PARALLEL FAN POWERED	1011	10	0.75	1,300	390	650	0.30	1/2	277/1	650	70	103.0	23.2	2.3	160	140	JCI / ENVIRO-TEC	TVS	1,2,3,4,5
FPU-18	PARALLEL FAN POWERED	1011	10	0.75	1,100	330	550	0.30	1/2	277/1	550	70	103.0	19.6	2.0	160	140	JCI / ENVIRO-TEC	TVS	1,2,3,4,5
FPU-19	PARALLEL FAN POWERED	1011	10	0.75	1,300	390	650	0.30	1/2	277/1	650	70	103.0	23.2	2.3	160	140	JCI / ENVIRO-TEC	TVS	1,2,3,4,5
FPU-20	PARALLEL FAN POWERED	1418	14	0.75	2,390	717	1,195	0.30	1/2	277/1	1195	70	103.0	42.6	4.3	160	140	JCI / ENVIRO-TEC	TVS	1,2,3,4,5
FPU-21	PARALLEL FAN POWERED	0811	8	0.75	850	255	425	0.30	1/2	277/1	425	70	103.0	15.1	1.5	160	140	JCI / ENVIRO-TEC	TVS	1,2,3,4,5
FPU-22	PARALLEL FAN POWERED	1011	10	0.75	1,200	360	600	0.30	1/2	277/1	600	70	103.0	21.4	2.1	160	140	JCI / ENVIRO-TEC	TVS	1,2,3,4,5
FPU-23	PARALLEL FAN POWERED	1211	12	0.75	1,600	480	800	0.30	1/2	277/1	800	70	103.0	28.5	2.9	160	140	JCI / ENVIRO-TEC	TVS	1,2,3,4,5
FPU-24	PARALLEL FAN POWERED	0606	6	0.75	440	132	220	0.30	1/3	277/1	220	70	103.0	7.8	0.8	160	140	JCI / ENVIRO-TEC	TVS	1,2,3,4,5
FPU-25	PARALLEL FAN POWERED	1011	10	0.75	1,200	360	600	0.30	1/2	277/1	600	70	103.0	21.4	2.1	160	140	JCI / ENVIRO-TEC	TVS	1,2,3,4,5
FPU-26	PARALLEL FAN POWERED	0806	8	0.75	680	204	340	0.30	1/3	277/1	340	70	103.0	12.1	1.2	160	140	JCI / ENVIRO-TEC	TVS	1,2,3,4,5
FPU-27	PARALLEL FAN POWERED	1011	10	0.75	1,100	330	550	0.30	1/2	277/1	550	70	103.0	19.6	2.0	160	140	JCI / ENVIRO-TEC	TVS	1,2,3,4,5
FPU-28	PARALLEL FAN POWERED	1011	10	0.75	1,300	390	650	0.30	1/2	277/1	650	70	103.0	23.2	2.3	160	140	JCI / ENVIRO-TEC	TVS	1,2,3,4,5
FPU-29	PARALLEL FAN POWERED	1011	10	0.75	1,350	405	675	0.30	1/2	277/1	675	70	103.0	24.1	2.4	160	140	JCI / ENVIRO-TEC	TVS	1,2,3,4,5
FPU-30	PARALLEL FAN POWERED	1211	12	0.75	1,750	525	875	0.30	1/2	277/1	875	70	103.0	31.2	3.1	160	140	JCI / ENVIRO-TEC	TVS	1,2,3,4,5
FPU-31	PARALLEL FAN POWERED	1011	10	0.75	1,500	450	750	0.30	1/2	277/1	750	70	103.0	26.7	2.7	160	140	JCI / ENVIRO-TEC	TVS	1,2,3,4,5
FPU-32	PARALLEL FAN POWERED	0806	8	0.75	620	186	310	0.30	1/3	277/1	310	70	103.0	11.0	1.1	160	140	JCI / ENVIRO-TEC	TVS	1,2,3,4,5
FPU-33	PARALLEL FAN POWERED	1011	10	0.75	1,500	450	750	0.30	1/2	277/1	750	70	103.0	26.7	2.7	160	140	JCI / ENVIRO-TEC	TVS	1,2,3,4,5
FPU-34	PARALLEL FAN POWERED	1011	10	0.75	1,250	375	625	0.30	1/2	277/1	625	70	103.0	22.3	2.2	160	140	JCI / ENVIRO-TEC	TVS	1,2,3,4,5
FPU-35	PARALLEL FAN POWERED	1011	10	0.75	1,500	450	750	0.30	1/2	277/1	750	70	103.0	26.7	2.7	160	140	JCI / ENVIRO-TEC	TVS	1,2,3,4,5
FPU-36	PARALLEL FAN POWERED	1011	10	0.75	1,250	375	625	0.30	1/2	277/1	625	70	103.0	22.3	2.2	160	140	JCI / ENVIRO-TEC	TVS	1,2,3,4,5
FPU-37	PARALLEL FAN POWERED	1011	10	0.75	1,500	450	750	0.30	1/2	277/1	750	70	103.0	26.7	2.7	160	140	JCI / ENVIRO-TEC	TVS	1,2,3,4,5
FPU-38	PARALLEL FAN POWERED	1211	12	0.75	2,200	660	1,100	0.30	1/2	277/1	1100	70	103.0	39.2	3.9	160	140	JCI / ENVIRO-TEC	TVS	1,2,3,4,5
FPU-39	PARALLEL FAN POWERED	0806	8	0.75	820	246	410	0.30	1/3	277/1	410	70	103.0	14.6	1.5	160	140	JCI / ENVIRO-TEC	TVS	1,2,3,4,5
FPU-40	PARALLEL FAN POWERED	1011	10	0.75	1,020	306	510	0.30	1/2	277/1	510	70	103.0	18.2	1.8	160	140	JCI / ENVIRO-TEC	TVS	1,2,3,4,5
FPU-41	PARALLEL FAN POWERED	1211	12	0.75	1,850	555	925	0.30	1/2	277/1	925	70	103.0	33.0	3.3	160	140	JCI / ENVIRO-TEC	TVS	1,2,3,4,6
FPU-42	PARALLEL FAN POWERED	1011	10	0.75	1,000	300	500	0.30	1/2	277/1	500	70	103.0	17.8	1.8	160	140	JCI / ENVIRO-TEC	TVS	1,2,3,4,6

NOTES-
1. VAV BOXES SHALL BE SINGLE WALL CONSTRUCTION WITH 1/2" MATTE FACED FIBERGLASS INSULATION.
2. REFER TO PLANS TO DETERMINE "HANDEDNESS" OF VAV BOXES.
3. PROVIDE CONTROL TRANSFORMER IN VAV CONTROL PANEL.
4. MINIMUM SUPPLY AIR MIXES WITH HEATING CFM AFTER HEATING COIL TO PROVIDE 85° LAT.
5. VAV BOX SHALL HAVE 2 WAY CONTROL VALVE.
6. VAV BOX SHALL HAVE 3 WAY CONTROL VALVE

EXPANSION TANK SCHEDULE

TAG	TANK VOLUME (GAL.)	ACCEPTANCE VOLUME (GAL.)	MIN. REQ'D ACCEPT VOLUME (GAL.)	MIN. SYSTEM TEMP. (DEG. F)	MAX. SYSTEM TEMP. (DEG. F)	MAX. WORKG. PRESSURE (PSI)	MAX WEIGHT (LBS)	BASIS OF DESIGN : ARMSTRONG MOUNTING	PIPE SIZE (IN, DIA.)	MODEL
ET-1	53	53	13	40	80	125	250	FLOOR	1	A200-L
ET-2	53	53	18	60	180	125	250	FLOOR	1	A200-L

NOTES:

1. MOUNT EXPANSION TANK ON EXISTING CONCRETE HOUSEKEEPING PAD.

PUMP SCHEDULE

MARK	PCWP-1&2	SCWP-1&2	HWP-1&2
SERVICE	PRIMARY CHILLED WATER	SECONDARY CHILLED WATER	HOT WATER
TYPE	VERTICAL INLINE	VERTICAL INLINE	VERTICAL INLINE
WATER TEMPERATURE (F)	54.0	54.0	160.0
OPERATING WATER FLOW (GPM)	275.0	550.0	80.0
DESIGN HEAD (FT)	39.0	56.0	85.0
MINIMUM EFFICIENCY (%)	71	81	55
IMPELLER DIA. (IN)	6.0	10.0	6.7
SHUT-OFF HEAD (FT)	60	70	95
MAXIMUM FLOW (GPM)	350	825	140
PRESSURE AT MAX. FLOW (FT)	25	32	50
OPERATING DESIGN BRAKE HP	3.8	9.7	3.1
MOTOR SIZE (HP)	5.0	15.0	5.0
VFD	YES	YES	YES
MOTOR SPEED (RPM)	3,600	1,760	3,600
VOLTS - PHASE	480/3	480/3	480/3
MFGR	ARMSTRONG	ARMSTRONG	ARMSTRONG
MODEL #	4300 0306-005.0	4300 0610-015.0	4300 1508-005.0
NOTES:	1,2	1	1

NOTES:

1. SEE DETAIL AND SCHEMATICS FOR MOUNTING AND ACCESSORIES.
2. VFD SHALL BE UTILIZED FOR BALANCING PURPOSES ONLY.

HOT WATER BOILER SCHEDULE

MARK	B-1
SERVICE	HEATING WATER
TYPE	POWER-FIN
MINIMUM OUTPUT (MBH)	850.0
MINIMUM THERMAL EFFICIENCY (%)	85
ENTERING WATER TEMPERATURE (F)	140.0
LEAVING WATER TEMPERATURE (F)	160.0
WATER FLOW (GPM)	58
MAXIMUM WATER P.D. (FT)	2
FUEL	NATURAL GAS
NATURAL GAS INPUT (CFH)	999
CONTROL STEPS	1
DRAFT TYPE	DIRECT VENT
MANUFACTURER	LOCHINVAR
MODEL	PBN-1002
NOTES:	1,2,3,4,5,6

Notes:
1. LESS THAN 10 PPM NOX.
2. 'SMART SYSTEM' CONTROLS.
3. ASME CERTIFIED.
4. FLOW SWITCH.
5. ASME RELIEF VALVE.
6. PROVIDE LTV VALVE.

EXISTING AIR HANDLING UNIT MODIFICATION SCHEDULE

UNIT DATA							
MARK	AHU-1	AHU-2	AHU-3	AHU-4	AHU-5	AHU-6	AHU-7
SERVICE	GYMNASIUM	LOCKER ROOM	1ST FLR B WEST	2ND FLR B WEST	1ST FLR B EAST	2ND FLR B EAST	CAFETERIA
TYPE	HORIZONTAL	HORIZONTAL	HORIZONTAL	HORIZONTAL	HORIZONTAL	HORIZONTAL	HORIZONTAL
NEW OUTSIDE AIR FLOW (CFM)	3,000	2,045	700	350	2,170	2,500	850
EXISTING SUPPLY FAN							
TYPE	FORWARD CURVE	FORWARD CURVE	FORWARD CURVE	FORWARD CURVE	FORWARD CURVE	FORWARD CURVE	FORWARD CURVE
NEW SUPPLY AIR FLOW (CFM)	12,500	3,580	10,850	8,370	14,070	19,110	6,650
NEW EXT. STATIC PRESSURE (IN. W.G.)	1.0	1.0	1.75	1.75	1.75	1.75	1.0
DRIVE TYPE	BELT	BELT	BELT	BELT	BELT	BELT	BELT
EXISTING MOTOR SIZE (HP)	7.5	3.0	15.0	10.0	15.0	20.0	5.0
MOTOR SPEED (RPM)	1,750	1,750	1,750	1,750	1,750	1,750	1,750
NEW MOTOR SIZE (HP)	7.5	3.0	15.0	10.0	15.0	20.0	5.0
VOLTS - PHASE	460/3	460/3	460/3	460/3	460/3	460/3	460/3
NEW COOLING COIL							
TYPE	CHW	CHW	CHW	CHW	CHW	CHW	CHW
AIR FLOW (CFM)	12,500	3,580	10,850	8,370	14,070	19,110	6,650
CABINET DIMENSIONS (LXW) INCHES	99X56	75X36	91X47	91X47	99X56	117X52	78X31
MIN. SENSIBLE CAPACITY (MBH)	351.0	132.6	253.1	190.7	363.2	480.9	166.6
MIN. TOTAL CAPACITY (MBH)	478.5	198.4	319.5	230.6	473.2	636.9	220.9
ENTERING DRY BULB TEMPERATURE (F)	81.0	89.3	76.6	76.1	78.9	78.3	78.2
ENTERING WET BULB TEMPERATURE (F)	66.6	71.6	65.0	63.6	65.3	65.0	64.9
LEAVING DRY BULB TEMPERATURE (F)	55.0	55.0	55.0	55.0	55.0	55.0	55.0
LEAVING WET BULB TEMPERATURE (F)	54.0	54.0	54.0	54.0	54.0	54.0	54.0
MINIMUM ROWS	6	6	6	6	6	6	6
MAXIMUM FINS PER INCH	8	11	6	6	8	9	8
MAXIMUM AIR P.D. (IN. W.G.)	0.53	0.74	0.72	0.82	0.61	0.65	0.57
WATER FLOW (GPM)	95.7	39.7	63.9	46.1	94.6	127.4	44.2
ENTERING WATER TEMPERATURE (F)	44.0	44.0	44.0	44.0	44.0	44.0	44.0
MAXIMUM WATER P.D. (FT)	6.7	6.2	5.7	5.3	6.5	4.3	5.3
NEW HEATING COIL							
TYPE	HOT WATER	HOT WATER	-	-	-	-	HOT WATER
POSITION	RE-HEAT	PRE-HEAT	-	-	-	-	RE-HEAT
AIR FLOW (CFM)	12,500	3,580	-	-	-	-	6,650
CABINET DIMENSIONS (LXW) INCHES	99X56	75X36	-	-	-	-	78X31
MIN. TOTAL CAPACITY (MBH)	328.1	154.3	-	-	-	-	144.4
ENTERING AIR TEMPERATURE (F)	60.7	45.1	-	-	-	-	64.9
LEAVING AIR TEMPERATURE (F)	85.0	85.0	-	-	-	-	85.0
MINIMUM ROWS	1	2	-	-	-	-	1
MAXIMUM FINS PER INCH	7	8	-	-	-	-	6
MAXIMUM AIR P.D. (IN. W.G.)	0.11	0.28	-	-	-	-	0.12
WATER FLOW (GPM)	32.8	15.4	-	-	-	-	14.4
ENTERING WATER TEMPERATURE (F)	160.0	160.0	-	-	-	-	160.0
MAXIMUM WATER P.D. (FT)	2.6	4.3	-	-	-	-	6.4
ACCESSORIES							
CONTROL VALVE TYPE: (CHW/HW)	2-WAY/2-WAY	2-WAY/2-WAY	2-WAY	2-WAY	2-WAY	2-WAY	3-WAY/3-WAY
FILTER TYPE/EFFIC(MERV 7)	2" PLEAT/30%	2" PLEAT/30%	2" PLEAT/30%	2" PLEAT/30%	2" PLEAT/30%	2" PLEAT/30%	2" PLEAT/30%
MAX CLEAN FILTER P.D.	0.20	0.20	0.20	0.20	0.20	0.20	0.20
MAX FACE VELOCITY (FPM)	300	300	300	300	300	300	300
VARIABLE FREQUENCY DRIVE:	YES	YES	YES	YES	YES	YES	YES
DUCT SMOKE DETECTOR (SA)	YES	YES	YES	YES	YES	YES	YES
DUCT SMOKE DETECTOR (RA)	NO	NO	NO	NO	NO	YES	NO

NOTES:
1. INSULATED STAINLESS STEEL DRAIN PAN.
2. VARIABLE FREQUENCY DRIVE WITH DISCONNECT SWITCH AND BYPASS. (EQUAL TO ABB OR DANFOSS)
3. RE-INSULATE THE ENTIRE INTERIOR OF AIR HANDLING UNIT CABINET.

AIR COOLED CHILLER SCHEDULE

MARK	CH-1,2
MANUFACTURER	MCQUAY
MODEL NO.	AGZ125D
UNIT OPERATING WEIGHT (LBS)	7,800
CAPACITY AT SCHEDULED COND'S (TONS)	110.0
AMBIENT TEMPERATURE (F)	105.0
NO. OF COMPRESSORS	6
TYPE	SCROLL
NO. OF INDEP REFRIG CIRCUITS	2
REFRIGERAANT TYPE	R-410A
STEPS OF UNLOADING	6
FOULING FACTOR	0.0001
WATER FLOW (GPM)	275.0
PERCENT GLYCOL	0
ENTERING WATER TEMPERATURE (F)	54.0
LEAVING WATER TEMPERATURE (F)	44.0
MAXIMUM WATER PRESSURE DROP (FT)	11.6
VOLTS - PHASE - HZ	460/3/60
UNIT TOTAL OPERATING AMPS	226.0
UNIT MINIMUM CIRCUIT AMPACITY	266.0
UNIT MAX OVERCURRENT PROT'N (AMPS)	300.0
MINIMUM EER@ ARHI COND'S	9.8
AHRI IPLV	15.4
NOTES:	1-12

NOTES:
1. CHILLERS ARE IN PARALLEL CONFIGURATION.
2. DDC CONTROLS, OPEN PROTOCOL, TO INTERFACE WITH BAS.
3. CONDENSER COIL HAIL GUARDS.
4. INSTALLED ACOUSTICAL BLANKETS ON EACH COMPRESSOR.
5. DISCONNECT AND SINGLE POINT POWER CONNECTION.
6. WITH PHASE FAILURE/VOLTAGE PROTECTION.
7. EVAPORATOR FREEZE PROTECTION.
8. WATER FLOW SWITCH.
9. LOW AMBIENT OPERATION DOWN TO -10°F.
10. NEOPRENE IN-SHEAR VIBRATION ISOLATORS.
11. DOUBLE INSULATION THICKNESS (1 1/2") ON EVAPORATOR.
12. HOT GAS BYPASS

SINGLE DUCT VAV BOX (COOLING ONLY)

UNIT MARK	SIZE	INLET DIAM	MAX BOX AIR PR. DROP (")	COOLING CFM MIN.	COOLING CFM MAX.	BOX DISCH MAX NC	JCI/ENVIRO TEC MODEL
TU-1	8	8	0.05	250	500	<25	TSS
TU-2	8	8	0.05	250	500	<25	TSS

NOTES:
1. PROVIDE MULTI-POINT SENSOR.
2. DIGITAL CONTROL. VERIFY "HAND" CONFIGURATION FOR CONTROL MODULE.

AIR/DIRT SEPARATOR SCHEDULE

TAG	DESIGN MAX. FLOW GPM	MAX. W.P.D. (FT. WG.)	STRAINER (Y) OR (N)	MAX. WORKG. TEMP. (DEG. F)	MAX. WORKG. PRESS. (PSI)	BASIS OF DESIGN: ARMSTRONG SERVICE	PIPE SIZE	OP WT (LB)	MODEL
ADS-1	550	2.0	Y	250	125	CHILLED WATER	6	800	DASH-R
ADS-2	160	2	Y	250	125	HOT WATER	3	222	DASH-R

NOTES:
1. AIR/DIRT SEPERATOR BY ARMSTRONG OR APPROVED EQUAL.

REVISIONS:
1 ADDENDUM #4, 7-11-2013

Alderson & Associates, Inc.
Consulting Engineers
PROJECT # 12149

HVAC EQUIPMENT UPGRADES AND CONTROL SYSTEM UPGRADES
POLICE TRAINING ACADEMY 12200 SE LOOP 410
CITY OF SAN ANTONIO

MECHANICAL SCHEDULES

PROJECT: 12149
DRAWN: AAI
CHECKED: AAI
DATE: 2013-06-12

SHEET M3.1

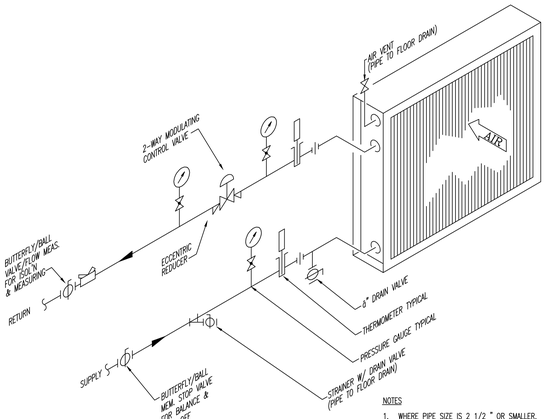

NOTES

1. WHERE PIPE SIZE IS 2 1/2 " OR SMALLER, PROVIDE BALL VALVE IN LIEU OF BUTTERFLY VALVE.
2. PROVIDE THERMOMETERS AND PRESSURE GAUGES, PER SPECS.
3. INSTALL UNIONS IN PIPE LOCATION OUT OF WAY TO PULL COIL OUT

   PROVIDE VENTURI METER IN THE SUPPLY PIPE FOR AHU COIL WITH 50 GPM OR MORE

1 WATER COIL CONNECTION WITH 2-WAY CONTROL VALVE

NOT TO SCALE

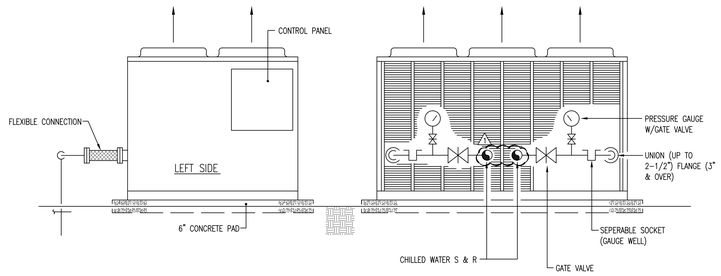

2 AIR-COOLED CHILLER PIPING CONNECTION DETAIL

NO SCALE

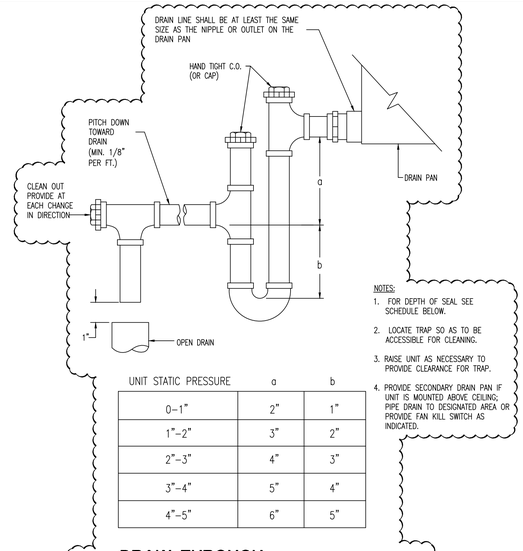

UNIT STATIC PRESSURE	a	b
0–1"	2"	1"
1"–2"	3"	2"
2"–3"	4"	3"
3"–4"	5"	4"
4"–5"	6"	5"

NOTES:

1. FOR DEPTH OF SEAL SEE SCHEDULE BELOW.
2. LOCATE TRAP SO AS TO BE ACCESSIBLE FOR CLEANING.
3. RAISE UNIT AS NECESSARY TO PROVIDE CLEARANCE FOR TRAP.
4. PROVIDE SECONDARY DRAIN PAN IF UNIT IS MOUNTED ABOVE CEILING; PIPE DRAIN TO DESIGNATED AREA OR PROVIDE FAN KILL SWITCH AS INDICATED.

3 DRAW THROUGH CONDENSATE DRAIN TRAP DETAIL

NOT TO SCALE

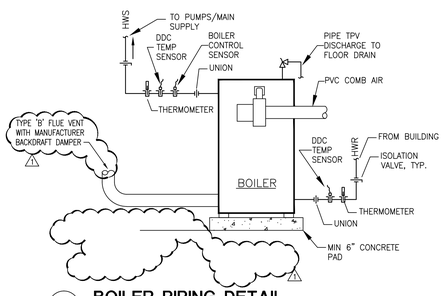

4 BOILER PIPING DETAIL

NO SCALE

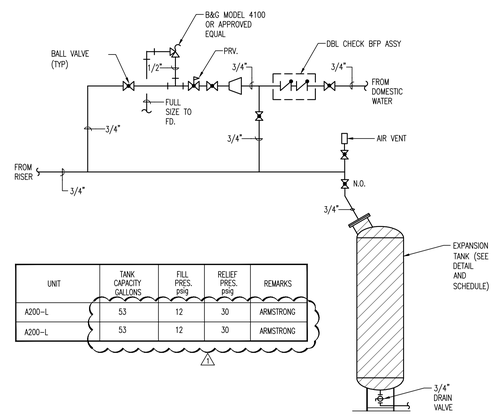

UNIT	TANK CAPACITY GALLONS	FILL PRES. PSIG	RELIEF PRES. PSIG	REMARKS
A200-L	53	12	30	ARMSTRONG
A200-L	53	12	30	ARMSTRONG

5 EXPANSION TANK PIPING

NOT TO SCALE

DELETED

6 HORIZONTAL HOT WATER UNIT HEATER DETAIL

NOT TO SCALE

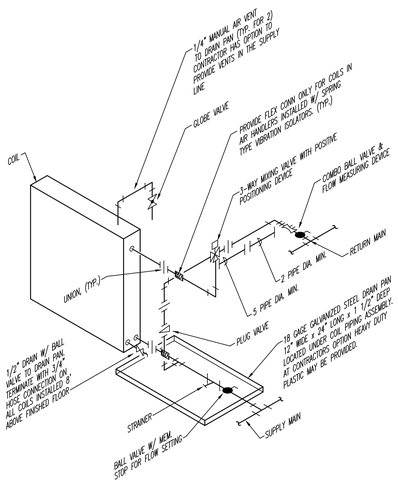

7 WATER COIL CONNECTION (3-WAY CONTROL VALVE)

NOT TO SCALE

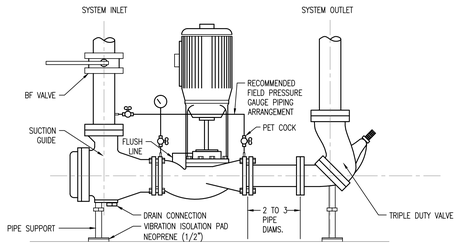

8 VERTICAL INLINE PUMP DETAIL

NOT TO SCALE

DELETED

4 SUPPLY DUCT HANGER DETAIL

M5.07

SCALE: NOT TO SCALE

REVISIONS:

1 ADDENDUM #4, 7-11-2013

THESE DRAWINGS, ACCOMPANYING SPECIFICATIONS AND OTHER DOCUMENTS PREPARED BY THE ARCHITECT OR ITS CONSULTANTS ARE INSTRUMENTS OF THE ENGINEER'S SERVICE FOR USE SOLELY WITH RESPECT TO THIS PROJECT AND, UNLESS OTHERWISE STATED, THE ENGINEER SHALL RETAIN ALL PERTINENT RIGHTS INCLUDING COPYRIGHT. THE OWNER AND OTHERS WHO ACCEPT THE CONTRACT DOCUMENTS AND OTHER RESERVED RIGHTS, INCLUDING, BUT NOT LIMITED TO, THE RIGHT TO REPRODUCE ALL OR WHOLE OF THESE DOCUMENTS IN ANY FORM UNLESS AUTHORIZED BY CONTRACT OR OTHER WRITTEN DOCUMENT IS STRICTLY PROHIBITED BY LAW.

STATE OF TEXAS
HECTOR M. CARRISALEZ
64007
LICENSED PROFESSIONAL ENGINEER
7-11-2013

Alderson & Associates, Inc.
F-1008

Alderson & Associates, Inc.
Consulting Engineers
7700 Torino
P.O. Box 170
Sam Antonio, TX 78229
Phone: (210) 614-1410
Fax: (210) 614-1412
© 2012 Alderson and Associates Inc
F-1008
PROJECT # 12149

HVAC EQUIPMENT UPGRADES AND CONTROL SYSTEM UPGRADES
POLICE TRAINING ACADEMY 12200 SE LOOP 410
CITY OF SAN ANTONIO

MECHANICAL DETAILS

PROJECT:	12149
DRAWN:	AAI
CHECKED:	AAI
DATE:	2013-06-12

SHEET

M4.1

OF:

OFFSETS 2 AND 3 AND TRANSITIONS MAY HAVE EQUAL OR UNEQUAL INLET AND OUTLET AREAS. TRANSITIONS MAY CONVERT DUCT PROFILES TO ANY COMBINATION FOR RECTANGULAR, ROUND OR FLAT OVAL SHAPES.

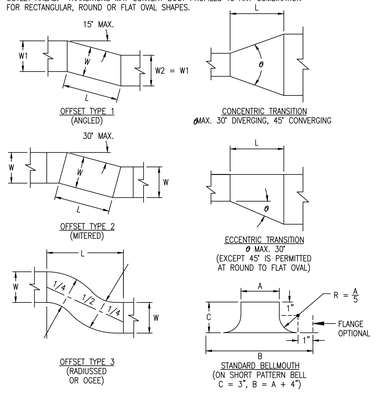

1 **OFFSETS AND TRANSITIONS**

NO SCALE

DELETED

2 **TYPICAL BRANCH CONNECTION**

NO SCALE

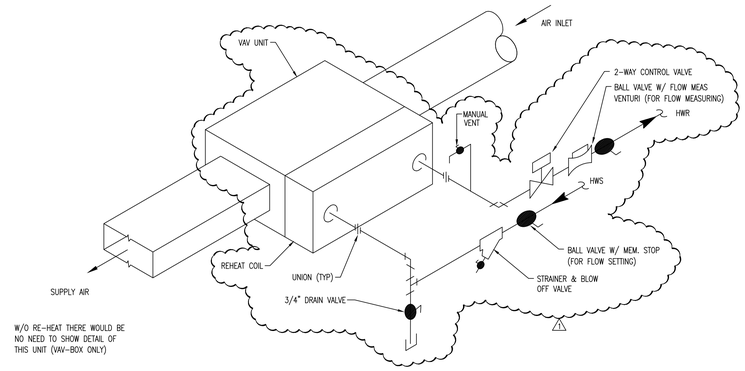

3 **VAV UNIT WITH REHEAT COIL**

NO SCALE

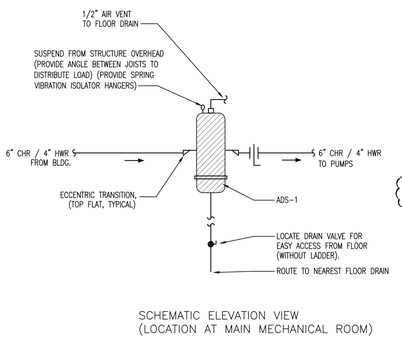

SCHEMATIC ELEVATION VIEW
(LOCATION AT MAIN MECHANICAL ROOM)

NOTE:
SIMILAR FOR HWS SYSTEM

4 **AIR/DIRT SEPARATOR DETAILS FOR CHW SYSTEM**

NO SCALE

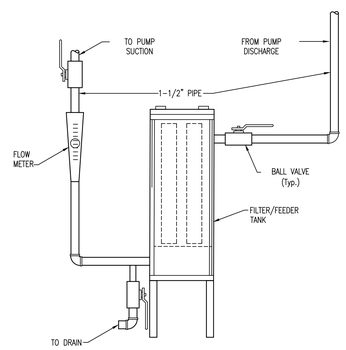

5 **FILTER FEEDER DETAIL**

NOT TO SCALE

DELETED

6 **HOT WATER COIL WITH 2-WAY CONTROL VALVE**

NOT TO SCALE

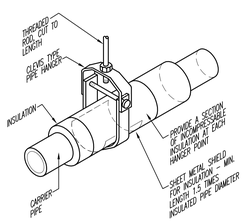

7 **PIPE HANGER DETAIL**

NOT TO SCALE

REVISIONS:
1 ADDENDUM #4, 7-11-2013

THESE DRAWINGS, ACCOMPANYING SPECIFICATIONS AND OTHER DOCUMENTS PREPARED BY THE ARCHITECT/ENGINEER ARE THE INSTRUMENTS OF THE ENGINEER'S SERVICE FOR USE SOLELY WITH RESPECT TO THIS PROJECT. THE ARCHITECT/ENGINEER SHALL BE DEEMED THE AUTHOR OF THE DOCUMENTS, SHALL RETAIN ALL COMMON LAW, STATUTORY AND OTHER RESERVED RIGHTS, INCLUDING THE COPYRIGHT THEREIN. THE REPRODUCTION OF THE WHOLE OF THESE DOCUMENTS IN ANY FORM UNLESS AUTHORIZED BY CONTRACT OR OTHER WRITTEN DOCUMENT IS STRICTLY PROHIBITED BY LAW.

STATE OF TEXAS
HECTOR M. CARRISALEZ
64007
LICENSED PROFESSIONAL ENGINEER
7-11-2013

Alderson & Associates, Inc.
F-1008

Alderson & Associates, Inc.
Consulting Engineers
7700 Torino
Suite 101
San Antonio, TX 78229
Phone (210) 614-1310
Fax (210) 614-1312

© 2012 Alderson and Associates Inc

F-1008

PROJECT # 12149

HVAC EQUIPMENT UPGRADES AND CONTROL SYSTEM UPGRADES
POLICE TRAINING ACADEMY
CITY OF SAN ANTONIO

MECHANICAL DETAILS

PROJECT: 12149
DRAWN: AAI
CHECKED: AAI
DATE: 2013-06-12

SHEET
M4.2
OF:

HEATING HOT WATER

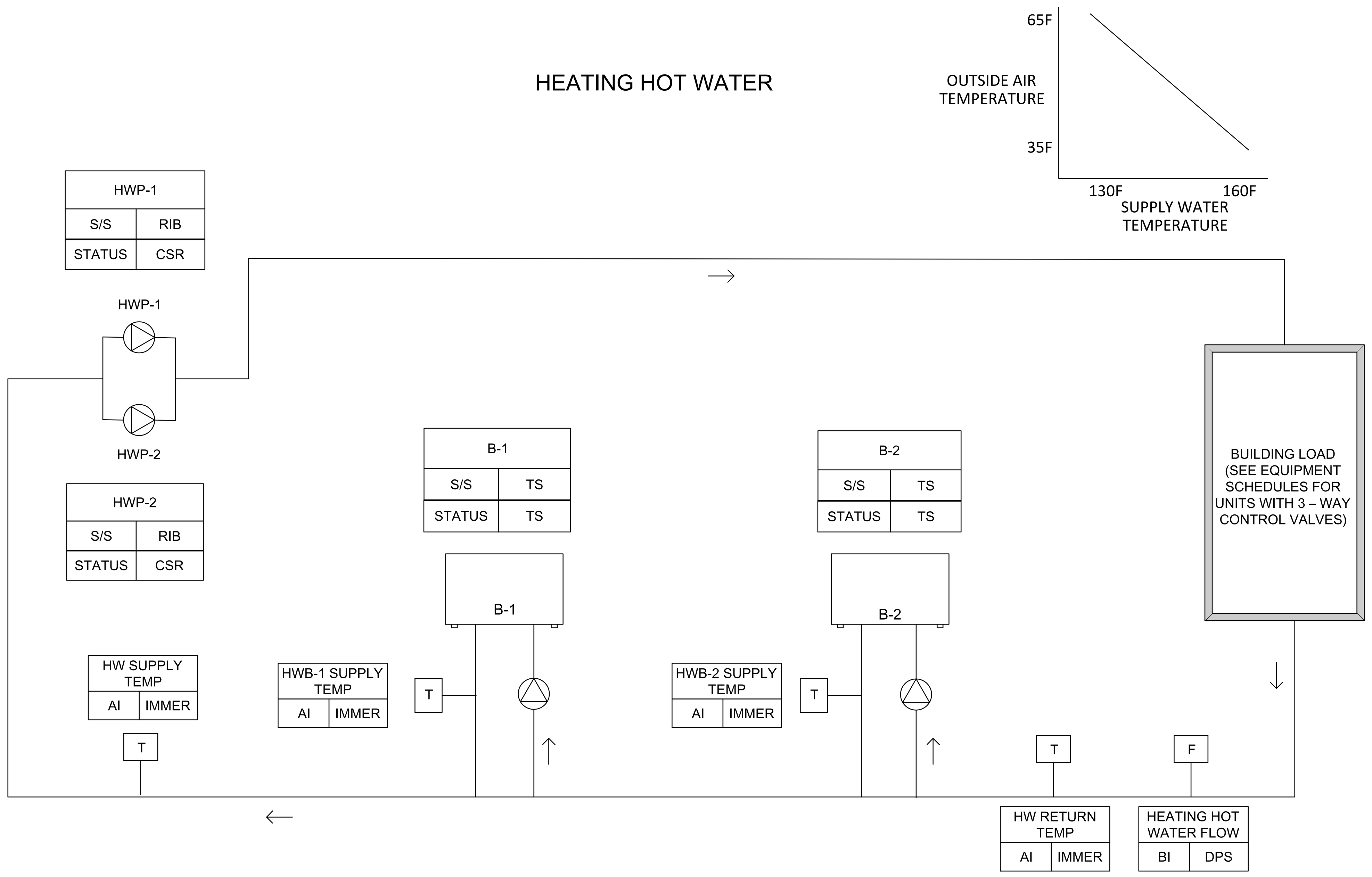

1 **BOILER CONTROL DIAGRAM**
NO SCALE

HEATING HOT WATER SYSTEM

THE HEATING HOT WATER SYSTEM CONSISTS OF TWO BOILERS, EACH WITH ITS OWN DEDICATED CIRCULATION PUMP, AND TWO HEATING HOT WATER PUMPS PIPED IN PARALLEL FOR LEAD/LAG OPERATION.

HEATING HOT WATER BOILER CIRCULATION PUMPS ARE ENABLED BY THE BOILER. THE BAS DOES NOT MONITOR THE CIRCULATION PUMPS.

WHEN A BOILER IS ENABLED, IT SHALL OPERATE ON ITS FACTORY CONTROLS TO ACHIEVE ITS HEATING WATER SETPOINT ADJUSTED BY THE OUTDOOR AIR RESET SCHEDULE.

THE HEATING HOT WATER SYSTEM SHALL OPERATE ANY TIME THE OUTSIDE AIR TEMPERATURE IS BELOW 60F UNLESS ANY AHU IS IN ZONE HUMIDITIY CONTROL DEHUMIDIFICATION MODE. IF ANY AHU IS IN ZONE HUMIDITY CONTROL DEHUMIDIFICATION MODE THE HEATING HOT WATER SYSTEM SHALL BE ENABLED AND THE HEATING HOT WATER SYSTEM SUPPLY SETPOINT SHALL BE 160F.

RUNTIME EQUALIZATION

THE BAS SHALL AUTOMATICALLY ROTATE THE LEAD PIECE OF EQUIPMENT BASED ON A RUN-TIME EQUALIZATION ROUTINE EVERY 500 HOURS.

START UP

ANYTIME THERE IS A CALL FOR HEATING, THE BAS SHALL START THE LEAD HEATING HOT WATER PUMP AND AFTER THE FLOW SWITCH INDICATES FLOW THE BAS SHALL ENABLE THE LEAD HEATING HOT WATER BOILER.

ADD BOILER

THE BAS SHALL CONTINUOUSLY MONITOR THE HEATING HOT WATER SUPPLY TEMPERATURE. ANYTIME THE HEATING HOT WATER SUPPLY TEMPERATURE IS 5F LESS THAN THE HEATING HOT WATER SUPPLY SETPOINT FOR MORE THAN 10 MINUTES THE BAS SHALL ENABLE THE LAG HEATING HOT WATER PUMP AND LAG HEATING HOT WATER BOILER.

SUBTRACT BOILER

THE BAS SHALL MONITOR THE HEATING HOT WATER SYSTEM SUPPLY AND RETURN TEMPERATURE. THE BAS SHALL SUBTRACT A HEATING HOT WATER BOILER AND HEATING HOT WATER PUMP ANYTIME THERE IS A CALL FOR HEATING, MORE THAN 1 HEATING HOT WATER BOILER IS OPERATING AND THE DIFFERENTIAL BETWEEN THE HEATING HOT WATER SUPPLY AND HEATING HOT WATER RETURN TEMPERATURE IS LESS THAN 5F FOR 15 MINUTES.

HEATING HOT WATER PUMPS

THE BAS SHALL ENABLE THE LEAD HEATING HOT PUMP WITH THE LEAD HEATING HOT WATER SYSTEM BOILER AND THE LAG HEATING HOT WATER PUMP AND LAG HEATING HOT WATER SYSTEM BOILER IN SERIES TO MAINTAIN THE HEATING HOT WATER SYSTEM SUPPLY HOT WATER SETPOINT.

OUTDOOR AIR RESET SCHEDULE

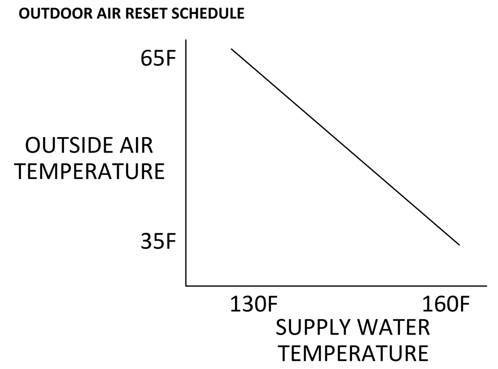

PARALLEL FAN POWERED TERMINAL UNITS

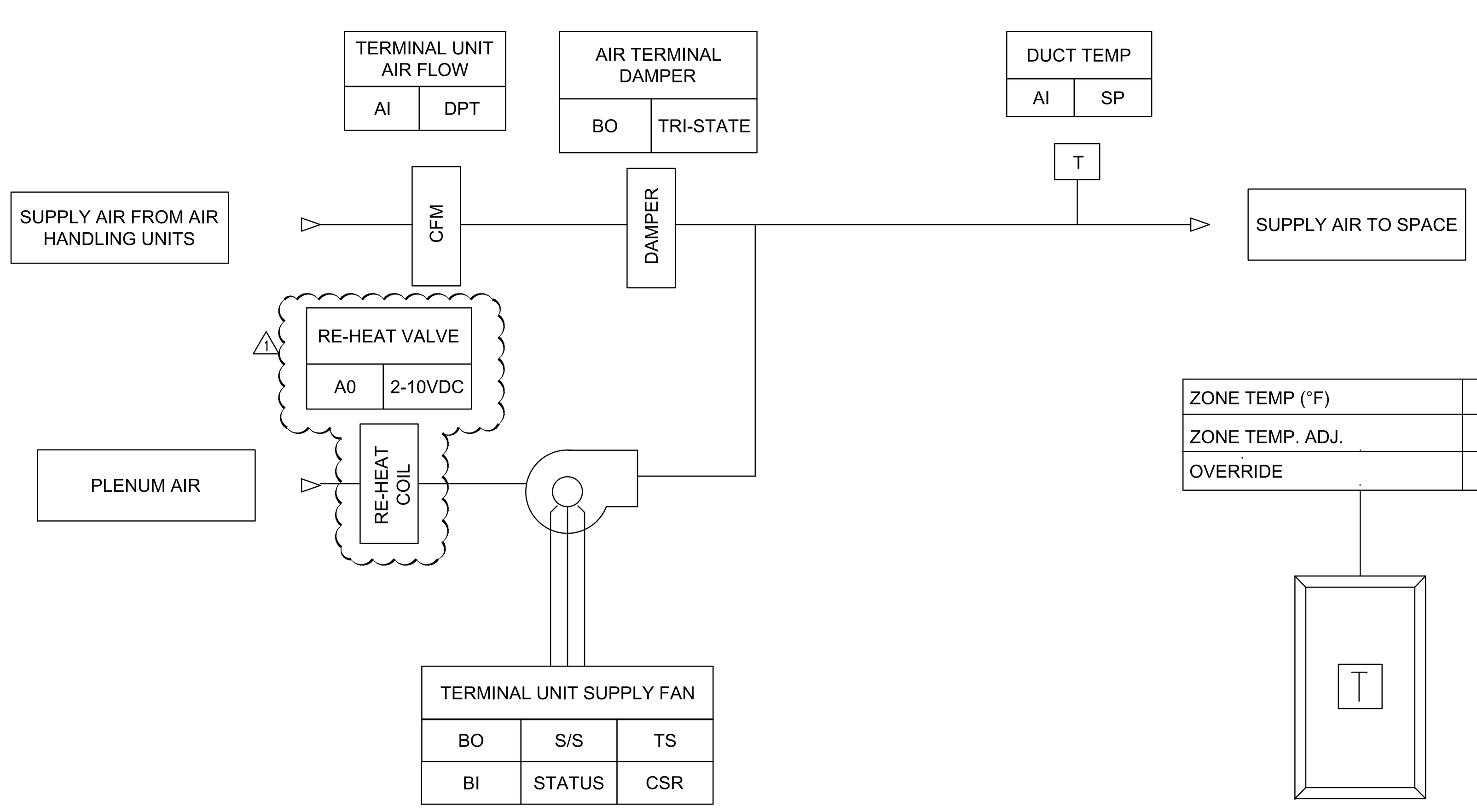

3 **FAN POWERED PARALLEL FLOW TERMINAL UNIT CONTROL DIAGRAM**
NO SCALE

FAN POWERED PARALLEL TERMINAL UNITS

THE FAN SHALL ONLY RUN DURING HEATING MODE

THE BAS SHALL MONITOR THE DISCHARGE AIR TEMPERATURE VIA DUCT MOUNTED DUCT PROBE SENSOR.

ON A RISE IN SPACE TEMPERATURE ABOVE SETPOINT THE TERMINAL UNIT CONTROLLER SHALL RESET THE SUPPLY AIR HIGHER, FURTHER OPENING THE AIR DAMPER UNTIL THE SETPOINT IS SATISFIED.

ON A FALL IN SPACE TEMPERATURE BELOW THE SETPOINT THE TERMINAL UNIT CONTROLLER SHALL RESET THE SUPPLY AIR LOWER, FURTHER CLOSING THE AIR DAMPER UNTIL THE SETPOINT IS SATISFIED. ONCE THE SUPPLY AIR DAMPER IS AT ITS SCHEDULED MINIMUM AIRFLOW AND THE SPACE TEMPERATURE IS 1F BELOW SETPOINT, THE BAS SHALL START THE FAN TO RE-CIRCULATE PLENUM AIR. IF THE ZONE TEMPERATURE REACHES 2F BELOW SETPOINT, MODULATE THE RE-HEAT VALVE TO SATISFY THE SPACE TEMPERATURE SETPOINT.

THE HOT WATER RE-HEAT VALVE SHALL NOT OPEN AND THE FAN SHALL NOT RUN UNLESS THE SUPPLY AIR DAMPER IS AT MINIMUM POSITION.

AFTER-HOURS OVERRIDE

DURING UNOCCUPIED MODE, THE HVAC SYSTEM MAY BE ENABLED FOR OCCUPIED MODE USE BY DEPRESSING THE OVERRIDE PUSH-BUTTON ON THE THERMOSTAT. THE OVERRIDE WILL BE TIMED FOR 3 HOURS.

CHILLED WATER SYSTEM

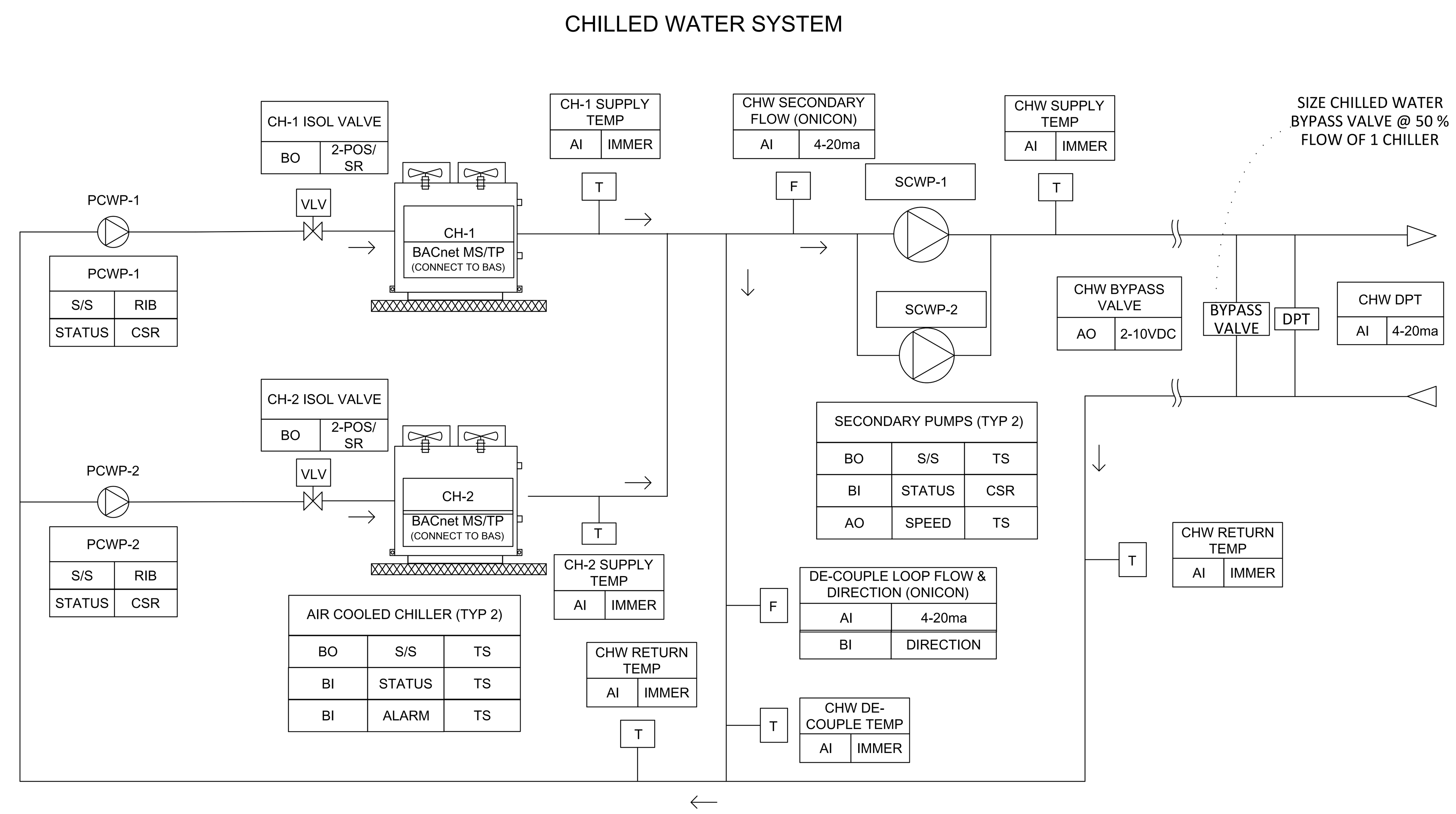

2 **CHILLER CONTROL DIAGRAM**
NO SCALE

CHILLERS

THE CHILLED WATER SYSTEM IS PIPED PRIMARY-SECONDARY AND CONSISTS OF TWO AIR-COOLED CHILLERS, TWO PRIMARY PUMPS, TWO SECONDARY PUMPS, A DE-COUPLE LOOP, CHILLED WATER BYPASS VALVE AND THE ASSOCIATED POINTS AND DEVICES TO PROVIDE FOR FULLY AUTOMATIC CONTROL.

WHEN A CHILLER IS ENABLED, IT SHALL OPERATE ON ITS FACTORY CONTROLS TO ACHIEVE ITS CHILLED WATER SETPOINT.

BACNET MS/TP: THE BAS SHALL ENABLE THE CHILLER VIA HARD-WIRED ENABLE COMMAND AND MONITOR THE CHILLER VIA BACNET MS/TP. BAS CONTRACTOR SHALL PROVIDE 10 ADDITIONAL MONITORED POINTS PER CHILLER ON THE GRAPHICS AS DESIGNATED BY THE OWNER OR ENGINEER.

1 THE CHILLER AND ITS DEDICATED PRIMARY PUMP ARE SIZED FOR LEAD/LAG OPERATION.

~~THE PRIMARY PUMPS ARE DEDICATED TO EACH CHILLER.~~

RUNTIME EQUALIZATION

THE BAS SHALL AUTOMATICALLY ROTATE THE LEAD PIECE OF EQUIPMENT BASED ON A RUN-TIME EQUALIZATION ROUTINE EVERY 500 HOURS. EXCLUDE THE PRIMARY PUMPS FROM THE RUN TIME EQUALIZATION ROUTINE AS THESE PUMPS ARE DEDICATED TO THE CHILLER IT SERVERS.

START UP

ANYTIME THERE IS A CALL FOR COOLING THE BAS SHALL OPEN THE LEAD CHILLER ISOLATION VALVE, START THE LEAD PRIMARY CHILLED WATER PUMP, ENABLE THE LEAD AIR COOLED CHILLER AND SOFT-START THE LEAD SECONDARY CHILLED WATER PUMP.

THE CHILLER SHALL OPERATE ON ITS FACTORY CONTROLS TO MAINTAIN ITS DISCHARGE CHILLED WATER TEMPERATURE SETPOINT.

CHILLED WATER SECONDARY PUMPS

1 THE SECONDARY CHILLED WATER PUMPS ARE SIZED FOR LEAD/STANDBY OPERATION.

WHEN ENABLED, THE BAS SHALL MONITOR THE CHILLED WATER SYSTEM DIFFERENTIAL PRESSURE AND MODULATE THE SPEED OF THE SECONDARY CHILLED WATER PUMP TO MAINTAIN THE CHILLED WATER SYSTEM DIFFERENTIAL PRESSURE SETPOINT.

THE LEAD SECONDARY CHILLED WATER PUMP SHALL HAVE A MINIMUM SPEED PROGRAMMED INTO THE VFD TO ENSURE CIRCULATION OF CHILLED WATER IN THE PIPING SYSTEM. THE BAS SHALL AUTOMATICALLY ADD OR SUBTRACT THE LAG SECONDARY CHILLED WATER PUMP IN SERIES AS REQUIRED TO MAINTAIN THE CHILLED WATER SYSTEM DIFFERENTIAL PRESSURE SETPOINT.

ADD CHILLER

THE BAS SHALL CONTINUOUSLY MONITOR THE CHILLED WATER SYSTEM SECONDARY FLOW. WHEN THE CHILLED WATER SYSTEM SECONDARY FLOW EXCEEDS THE FLOW OF ONE CHILLER FOR MORE THAN 2 MINUTES THE BAS SHALL OPEN THE LAG CHILLER ISOLATION VALVE, START THE LAG CHILLER AND ITS DEDICATED PRIMARY CHILLED WATER PUMP.

THE LAG CHILLER SHALL OPERATE ON ITS FACTORY CONTROLS TO MAINTAIN ITS DISCHARGE CHILLED WATER SETPOINT.

SUBTRACT CHILLER

THE BAS SHALL CONTINUOUSLY MONITOR THE CHILLED WATER SYSTEM SECONDARY FLOW. WHEN THE SECONDARY CHILLED WATER FLOW IS LESS THAN THE FLOW FOR ONE CHILLER FOR 5 MINUTES THE BAS SHALL AUTOMATICALLY SUBTRACT THE LAG CHILLER, STOP ITS DEDICATED PRIMARY CHILLED WATER PUMP AND CLOSE THE LAG CHILLER ISOLATION VALVE.

FREEZE PROTECTION

ANYTIME THE OUTSIDE AIR TEMPERATURE IS BELOW 35F THE BAS SHALL OPEN BOTH CHILLER ISOLATION VALVES, OPEN THE CHILLED WATER BYPASS VALVE 100% AND RUN THE PUMPS AT 50% TO CIRCULATE WATER IN THE CHILLED IN THE CHILLED WATER LOOP AND PREVENT FREEZING OF PIPES AND EQUIPMENT.

CHILLED WATER BYPASS VALVE

THE BAS SHALL MODULATE THE CHILLED WATER SYSTEM BYPASS VALVE AS NECESSARY TO MAINTIAN THE CHILLED WATER SYSTEM DIFFERENTIAL PRESSURE SETPOINT. WHEN THE SECONDARY CHILLED WATER PUMP VFD IS AT MINIMUM SPEED AND THE DIFFERENTIAL PRESSURE SETPOINT CANNOT BE ACHIEVED. THE BAS SHALL MODULATED THE CHILLED WATER BYPASS VALVE. 1

THE BAS SHALL EXERCISE THE CHILLED WATER BYPASS VALVE WEEKLY TO ENSURE PROPER OPERATION. ONCE A WEEK DURING UNOCCUPIED PERIODS THE BAS SHALL AUTOMATICALLY OPEN CHILLED WATER BYPASS VALVE 100% AND CLOSE THE CHILLED WATER BYPASS VALVE TO 0 %.

DURING THE CHILLED WATER SYSTEM BYPASS VALVE EXERCISE THE BAS SHALL SUSPEND AUTOMATIC CONTROL OF THE CHILLED WATER SECONDARY PUMPS BY SETTING THE OPERATING PUMPS TO 50% SPEED UNTIL THE EXERCISE IS COMPLETE. THE EXERCISE PERIOD SHALL NOT EXCEED 3 MINUTES.

SHUTDOWN

WHEN THE CHILLERS ARE COMMANDED OFF, THE CHILLERS SHALL BE OFF, THE PRIMARY CHILLED WATER PUMPS SHALL BE OFF, THE CHILLED WATER ISOLATION VALVES SHALL BE CLOSED, THE SECONDARY CHILLED WATER PUMPS SHALL BE OFF AND THE CHILLED WATER SYSTEM BYPASS VALVE SHALL BE OPEN.

EXHAUST FANS

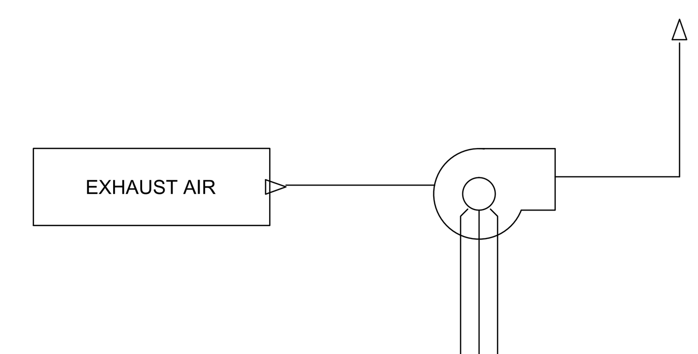

EXHAUST FANS		
BO	S/S	RIB
BI	STATUS	CSR

OUTSIDE AIR TEMPERATURE AND HUMIDITY MONITORING

OUTSIDE AIR CONDITIONS		
TEMP	AI	AVG
HUMIDITY	AI	2% RH

4 **EXHAUST FAN CONTROL DIAGRAM**
NO SCALE

EXHAUST FANS

DURING UNOCCUPIED PERIODS THE EXHAUST FANS SHALL BE OFF.

DURING OCCUPIED PERIODS THE EXHAUST FANS SHALL BE ON.

EXHAUST FAN STATUS

THE BAS SHALL GENERATE A EXHAUST FAN FAILURE ALARM IF THE EXHAUST FAN STATUS SWITCH DOES NOT MAKE VIA THE CURRENT SENSING RELAY WITHIN 30 SECONDS OF A START COMMAND BY THE BAS.

THE BAS SHALL CONTINUOUSLY MONITOR THE EXHAUST FAN STATUS CURRENT SENSING REALY AND GENERATE AN EXHAUST FAN FAILURE ALARM ANYTIME THE EXHAUST FAN IS COMMANDED TO RUN AND IT IS NOT RUNNING.

MISMATCH, THE BAS SHALL GENERATE A FAN MISMATCH ALARM IF THE FAN IS RUNNING WHEN THE BAS HAS NOT COMMANDED THE FAN TO RUN.

RELIEF FANS

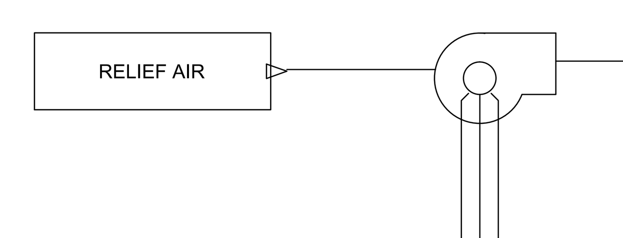

RELIEF FANS		
BO	S/S	RIB
BI	STATUS	CSR

CRAWL SPACE MONITORING – MOUNT IN CRAWL SPACE AS SHOWN ON PLANS

CRAWL SPACE AIR CONDITIONS		
TEMP	AI	AVG
HUMIDITY	AI	2% RH

5 **RELIEF FAN CONTROL DIAGRAM**
NO SCALE

RELIEF FANS

DURING UNOCCUPIED PERIODS THE RELIEF FANS SHALL BE OFF.

DURING OCCUPIED PERIODS THE RELIEF FANS SHALL BE ON.

RELIEF FAN STATUS

THE BAS SHALL GENERATE A RELIEF FAN FAILURE ALARM IF THE RELIEF FAN STATUS SWITCH DOES NOT MAKE VIA THE CURRENT SENSING RELAY WITHIN 30 SECONDS OF A START COMMAND BY THE BAS.

THE BAS SHALL CONTINUOUSLY MONITOR THE RELIEF FAN STATUS CURRENT SENSING REALY AND GENERATE AN RELIEF FAN FAILURE ALARM ANYTIME THE RELIEF FAN IS COMMANDED TO RUN AND IT IS NOT RUNNING.

MISMATCH, THE BAS SHALL GENERATE A FAN MISMATCH ALARM IF THE FAN IS RUNNING WHEN THE BAS HAS NOT COMMANDED THE FAN TO RUN.

REVISIONS:
1 ADDENDUM #4, 7-11-2013

THESE DRAWINGS, ACCOMPANYING SPECIFICATIONS AND OTHER DOCUMENTS PREPARED BY THE ENGINEER FOR THIS PROJECT ARE INSTRUMENTS OF THE ENGINEER'S SERVICE FOR USE SOLELY WITH RESPECT TO THIS PROJECT AND, UNLESS OTHERWISE PROVIDED, THE ENGINEER SHALL BE DEEMED THE AUTHOR OF THESE DOCUMENTS AND SHALL RETAIN ALL COMMON LAW, STATUTORY AND OTHER RESERVED RIGHTS, INCLUDING THE COPYRIGHT. DUPLICATION OF ANY PART OR IN WHOLE OF THESE DOCUMENTS IN ANY FORM UNLESS AUTHORIZED BY CONTRACT OR OTHER WRITTEN DOCUMENT IS STRICTLY PROHIBITED BY LAW.

STATE OF TEXAS
HECTOR M. CARRISALEZ
64007
LICENSED
PROFESSIONAL ENGINEER
7-11-2013
Alderson & Associates, Inc.
F-1008

Alderson & Associates, Inc.
Consulting Engineers
7700 Torino
Suite 101
San Antonio, TX 78229
Phone (210) 614-1110
Fax (210) 615-8549
© 2012 Alderson and Associates Inc
F-1008
PROJECT # 12149

HVAC EQUIPMENT UPGRADES AND CONTROL SYSTEM UPGRADES
POLICE TRAINING ACADEMY 12200 SE LOOP 410
CITY OF SAN ANTONIO

CONTROLS - HYDRONIC SYSTEMS

PROJECT: 12149
DRAWN: AH
CHECKED: AH
DATE: 2013-06-12

SHEET
M5.2
OF:

CONSTANT VOLUME AIR HANDLING UNIT WITH RE-HEAT

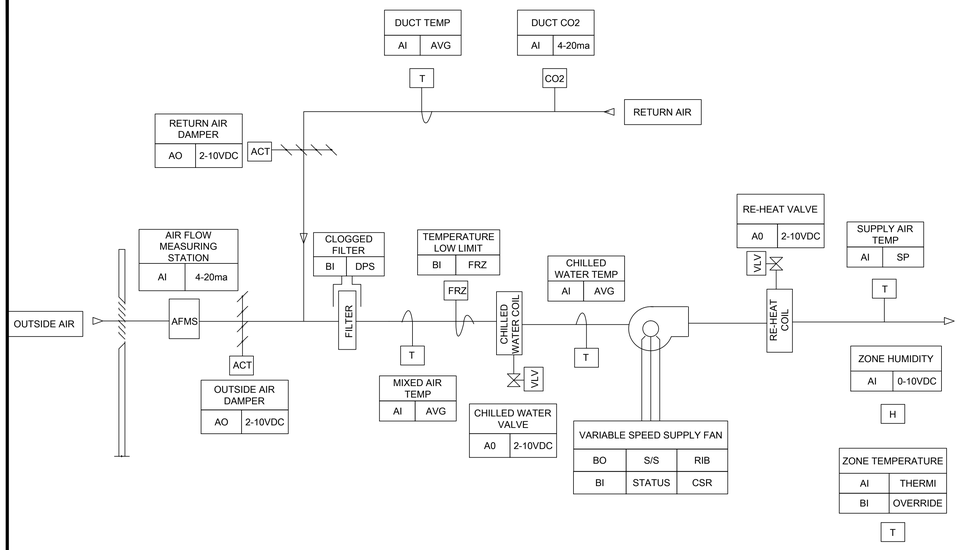

1 CV AIR HANDLING UNIT W/RE-HEAT CONTROL DIAGRAM

NO SCALE

CONSTANT VOLUME AIR HANDLING UNITS WITH RE-HEAT

START UP

SUBJECT TO THE OCCUPIED SCHEDULE AND THE OPTIMAL START PROGRAM, THE BAS SHALL OPEN THE RETURN AIR DAMPER 100% AND AFTER A 60 SECOND DELAY START THE SUPPLY FAN AND MODULATE THE CHILLED WATER VALVE AS DESCRIBED IN THE ZONE TEMPERATURE SEQUENCE BELOW.

OPTIMAL START

DURING OPTIMAL START, THE BAS SHALL OPEN THE RETURN AIR DAMPER 100%, START THE SUPPLY FAN AND MODULATE THE CHILLED WATER VALVE TO MAINTAIN THE DISCHARGE AIR TEMPERATURE AS SPECIFIED. THE BAS SHALL AUTOMATICALLY ADJUST THE THE DAILY START TIME OF THE AHU TO ACHIEVE OCCUPIED SETPOINTS JUST PRIOR TO THE SCHEDULE OCCUPIED PERIOD.

THE OUTSIDE AIR DAMPER SHALL REMAIN CLOSED DURING THE OPTIMAL START PERIOD. THE BAS SHALL OPEN THE OUTSIDE AIR DAMPER AND CONTROL TO THE OUTSIDE AIR FLOW SETPOINT AS DESCRIBED BELOW JUST PRIOR TO THE SCHEDULED OCCUPIED PERIOD.

SUPPLY FAN STATUS

THE BAS SHALL GENERATE A SUPPLY FAN FAILURE ALARM IF THE SUPPLY FAN STATUS SWITCH DOES NOT MAKE VIA THE CURRENT SENSING RELAY WITHIN 30 SECONDS OF A START COMMAND BY THE BAS.

THE BAS SHALL CONTINUOUSLY MONITOR THE SUPPLY FAN STATUS CURRENT SENSING REALY AND GENERATE A SUPPLY FAN FAILURE ALARM ANYTIME THE SUPPLY FAN IS COMMANDED TO RUN AND IT IS NOT RUNNING.

MISMATCH, THE BAS SHALL GENERATE A FAN MISMATCH ALARM IF THE FAN IS RUNNING WHEN THE BAS HAS NOT COMMANDED THE FAN TO RUN.

RE-HEAT AIR TEMPERATURE CONTROL

THE BAS SHALL MODULATE THE RE-HEAT CONTROL VALVE TO MAINTAIN THE ZONE TEMPERATURE SETPOINT.

ZONE TEMPERATURE CONTROL

THE BAS SHALL MODULATE THE CHILLED WATER CONTROL VALVE TO MAINTAIN A THE ZONE TEMPERATURE SETPOINT.

OUTSIDE AIR FLOW CONTROL

OUTSIDE AIR FLOW SHALL BE MONITORED AT THE ELECTRONIC AIR FLOW MEASURING STATION.

DURING OCCUPIED PERIODS, THE BAS SHALL MODULATE THE OUTSIDE AIR DAMPER AND RETURN AIR DAMPER IN SERIES TO MAINTAIN THE OUTSIDE AIRFLOW SETPOINT.

RETURN DUCT CO2

THE BAS SHALL CONTINUOUSLY MONITOR THE RETURN AIR DUCT CO2 SENSOR DURING OCCUPIED PERIODS.

ZONE HUMIDITY CONTROL

THE BAS SHALL CONTINUOUSLY MONITOR THE ZONE HUMIDITY SENSOR (1 PER AHU LOCATED IN LOCATION SHOWN ON DRAWINGS).

DURING UNOCCUPIED PERIODS, IF THE ZONE HUMIDITY RISES ABOVE 60% RH THE BAS SHALL AUTOMATICALLY CHANGE TO OCCUPIED SETPOINTS. THE BAS SHALL RUN THE SUPPLY FAN, OPEN THE CHILLED WATER VALVE 100% AND MODULATE THE RE-HEAT VALVE TO MAINTAIN THE ZONE TEMPERATURE SETPOINT. THE SYSTEM SHALL STAY IN DEHUMIDIFICATION MODE UNTIL THE ZONE HUMIDITY REACHES 55% RH AND THEN RETURN TO UNOCCUPIED SETPOINTS SUBJECT TO THE OCCUPIED/UNOCCUPIED SCHEDULE AND OPTIMAL START PROGRAMS.

THE OUTSIDE AIR DAMPER SHALL REMAIN CLOSED DURING ZONE HUMIDITY CONTROL DEHUMIDIFICATION.

OCCUPIED/UNOCCUPIED SCHEDULE

THE AHU SHALL BE ENABLED ON THE OCCUPIED SCHEDULE AS LISTED IN THE BAS GENERAL REQUIREMENTS - OWNERS PROGRAM REQUIREMENTS.

FREEZE PROTECTION

ALL AHU TEMPERATURE SENSORS SHALL BE CONSIDERED TEMPERATURE LOW-LIMIT DEVICES FOR THE PURPOSES OF FREEZE PROTECTION.

IF ANY TEMPERATURE SENSOR INDICATES A TEMPERATURE BELOW 35F, THE BAS SHALL AUTOMATICALLY OPEN THE RETURN AIR DAMPER, CLOSE THE OUTSIDE AIR DAMPERS, MODULATE THE CHILLED WATER VALVE OPEN 100%, MODULATE THE HOT WATER VALVE OPEN 100%, OPERATE THE CHILLED WATER PUMPS TO PROVIDE CIRULATION IN THE CHILLED WATER COIL, OPERATE THE HEATING WATER PUMPS TO PROVIDE CIRCULATION IN THE HOT WATER COIL AND STOP THE SUPPLY FAN.

A TEMPERATURE LOW LIMIT ALARM SHALL BE GENERATED AT THE BAS.

PROVIDE A MANUAL RESET THERMOSTAT AND MONITOR THE CONTACTS AS SPECIFIED.

MANUAL RESET OF THE AHU FOLLOWING A TEMPERATURE LOW-LIMIT SHALL BE REQUIRED.

DIRTY FILTER ALARM

THE BAS SHALL MONITOR THE FILTER PRESSURE SWITCH AND ALARM IF THE FILTER DIFFERENTIAL PRESSURE EXCEEDS 0.06"W.C.

UNOCCUPIED MODE OF OPERATION

DURING THE UNOCCUPIED MODE, THE SUPPLY FAN SHALL BE OFF, THE CHILLED WATER VALVE SHALL BE CLOSED, THE HEATING HOT WATER VALVE SHALL BE CLOSED, THE OUTSIDE AIR DAMPER SHALL BE CLOSED AND THE RETURN AIR DAMPER SHALL BE OPEN.

THE BAS SHALL CONTINUOUSLY MONITOR THE SPACE TEMPERATURE. THE BAS SHALL OPERATE THE SUPPLY FAN, CHILLED WATER VALVE AND HOT WATER VALVE TO MAINTAIN THE UNOCCUPIED SPACE TEMPERATURE AS REQUIRED.

THE OUTSIDE AIR DAMPER SHALL REMAIN CLOSED DURING UNOCCUPIED MODE.

SHUTDOWN

WHEN THE AHU IS COMMANDED OFF, THE OUTSIDE AIR DAMPER SHALL BE CLOSED, THE RETURN AIR DAMPER SHALL BE OPEN, THE CHILLED WATER VALVE SHALL BE CLOSED, THE HOT WATER VALVE SHALL BE CLOSED AND THE SUPPLY FAN SHALL BE OFF.

SERIES COOLING-ONLY TERMINAL UNITS

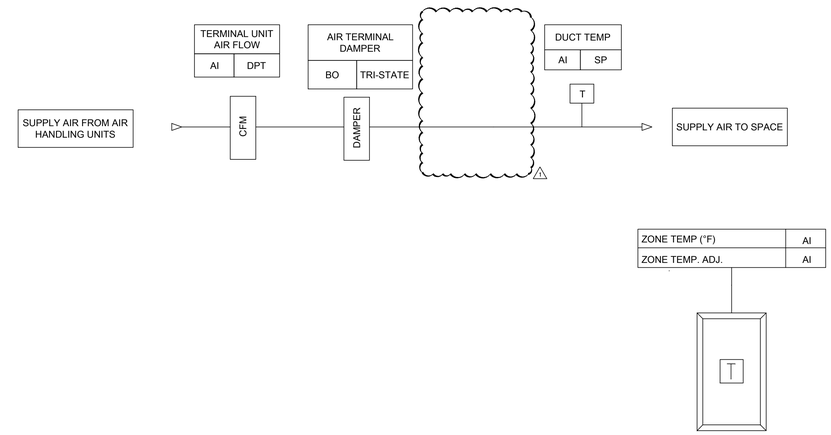

2 SERIES COOLING-ONLY TERMINAL UNITS CONTROL DIAGRAM

NO SCALE

SERIES TERMINAL UNITS

THE BAS SHALL MONITOR THE DISCHARGE AIR TEMPERATURE VIA DUCT MOUNTED DUCT PROBE SENSOR.

ON A RISE IN SPACE TEMPERATURE ABOVE SETPOINT THE TERMINAL UNIT CONTROLLER SHALL RESET THE SUPPLY AIR HIGHER, FURTHER OPENING THE AIR DAMPER UNTIL THE SETPOINT IS SATISFIED.

ON A FALL IN SPACE TEMPERATURE BELOW THE SETPOINT THE TERMINAL UNIT CONTROLLER SHALL RESET THE SUPPLY AIR LOWER, FURTHER CLOSING THE AIR DAMPER UNTIL THE SETPOINT IS SATISFIED.

3 MISCELLANEOUS CONTROL SEQUENCE

NO SCALE

OUTSIDE AIR TEMPERATURE AND HUMIDITY

THE BAS SHALL CONTINUOUSLY MONITOR THE OUTSIDE AIR TEMPERATURE AND HUMIDITY.

REVISIONS:

1 ADDENDUM #4, 7-11-2013

THESE DRAWINGS, ACCOMPANYING SPECIFICATIONS AND OTHER DOCUMENTS PREPARED BY THE ARCHITECT OR ENGINEER ARE THE INSTRUMENTS OF THE ENGINEER'S SERVICE FOR USE SOLELY WITH RESPECT TO THIS PROJECT AND, UNLESS OTHERWISE STATED, THE ENGINEER SHALL RETAIN ALL PROPERTY RIGHTS IN SUCH DRAWINGS, DOCUMENTS, SPECIFICATIONS, ESTIMATES, PROGRAMS, REPORTS AND OTHER RESERVED RIGHTS, INCLUDING THE COPYRIGHT THEREIN. REPRODUCTION OF ANY WHOLE OR PART OF THESE DOCUMENTS IN ANY FORM UNLESS AUTHORIZED BY CONTRACT OR OTHER WRITTEN DOCUMENT IS STRICTLY PROHIBITED BY LAW.

STATE OF TEXAS
HECTOR M. CARRISALEZ
64007
LICENSED PROFESSIONAL ENGINEER
7-11-2013

Alderson & Associates, Inc.
F-1008

Alderson & Associates, Inc.
Consulting Engineers
7700 Toriho
Suite 110
San Antonio, TX 78229
Phone (210) 614-1310
Fax (210) 614-1342
PROJECT # 12149

© 2012 Alderson and Associates Inc
F-1008

HVAC EQUIPMENT UPGRADES AND CONTROL SYSTEM UPGRADES
POLICE TRAINING ACADEMY 12200 SE LOOP 410
CITY OF SAN ANTONIO

CONTROLS - AIR DISTRIBUTION SYSTEMS

PROJECT:	12149
DRAWN:	AAI
CHECKED:	AAI
DATE:	2013-06-12

SHEET

M5.4

OF: