## SYSTEM B & C CONVEYANCE CALCULATIONS

| Upstream Node | Downstream Node | Actual Length | Hydraulic Length | Manning's N Value | Slope | Shape | Number of Barrels | Span | Rise | Friction Slope | Soffit Upstream | Soffit Downstream | Invert Upstream | Invert Downstream | Uniform Depth | Uniform Velocity | Actual Velocity Downstream | Actual Depth Upstream | Actual Depth Downstream | HGL Downstream | HGL Upstream | EGL Downstream | EGL Upstream | Cumulative Tc | Discharge | Cumulative Area | Cumulative C Value | Cumulative Intensity |
|---|---|---|---|---|---|---|---|---|---|---|---|---|---|---|---|---|---|---|---|---|---|---|---|---|---|---|---|---|
| B100 | Bout | 238.32 | 238.32 | 0.013 | 0.30 | Box | 1 | 6 | 4 | 0.003 | 646.08 | 645.37 | 642.08 | 641.37 | 2.78 | 8.06 | 5.61 | 3.68 | 4.00 | 645.37 | 645.76 | 645.86 | 646.41 | 28.66 | 134.64 | 27.02 | 0.75 | 0.00 |
| B110 | B100 | 95.01 | 95.01 | 0.013 | 0.30 | Box | 1 | 6 | 4 | 0.003 | 646.37 | 646.08 | 642.37 | 642.08 | 2.72 | 7.93 | 5.87 | 3.59 | 3.68 | 645.76 | 645.95 | 646.41 | 646.56 | 28.00 | 129.47 | 27.02 | 0.75 | 5.18 |
| B120 | B110 | 59.23 | 59.23 | 0.013 | 0.30 | Box | 1 | 6 | 4 | 0.003 | 646.54 | 646.37 | 642.54 | 642.37 | 2.72 | 7.93 | 6.01 | 3.92 | 3.59 | 645.95 | 646.46 | 646.56 | 647.07 | 27.04 | 129.47 | 24.09 | 0.78 | 5.30 |
| B130 | B120 | 5.00 | 5.00 | 0.013 | 0.30 | Box | 1 | 6 | 4 | 0.003 | 646.56 | 646.54 | 642.56 | 642.54 | 1.05 | 5.31 | 1.42 | 3.94 | 3.92 | 646.46 | 646.50 | 647.07 | 646.53 | 26.88 | 33.50 | 24.09 | 0.78 | 5.30 |
| B200 | B120 | 75.93 | 82.43 | 0.013 | 0.30 | Box | 1 | 4 | 3 | 0.003 | 645.77 | 645.54 | 642.77 | 642.54 | 2.65 | 6.86 | 6.04 | 3.00 | 3.00 | 646.46 | 646.98 | 647.07 | 647.55 | 26.88 | 72.54 | 24.09 | 0.78 | 5.30 |
| B210 | B200 | 140.13 | 146.63 | 0.013 | 0.35 | Circular | 1 | n/a | 3.5 | 0.0035 | 646.90 | 646.41 | 643.40 | 642.91 | 1.49 | 5.78 | 2.34 | 3.50 | 3.50 | 646.98 | 647.10 | 647.55 | 647.19 | 26.28 | 22.55 | 18.11 | 0.77 | 5.36 |
| B220 | B210 | 134.70 | 140.20 | 0.013 | 0.35 | Circular | 1 | n/a | 3 | 0.0034 | 647.37 | 646.90 | 644.37 | 643.90 | 1.32 | 5.22 | 2.21 | 2.80 | 3.00 | 647.10 | 647.17 | 647.19 | 647.25 | 20.80 | 15.62 | 4.65 | 0.87 | 6.06 |
| B227 | B220 | 110.26 | 114.76 | 0.013 | 0.35 | Circular | 1 | n/a | 2 | 0.0035 | 647.79 | 647.40 | 645.79 | 645.40 | 1.88 | 4.73 | 4.93 | 2.00 | 1.77 | 647.17 | 648.03 | 647.25 | 648.40 | 19.75 | 14.49 | 2.92 | 0.92 | 6.23 |
| B230 | B227 | 33.04 | 37.04 | 0.013 | 0.35 | Circular | 1 | n/a | 2 | 0.0034 | 647.94 | 647.82 | 645.94 | 645.82 | 0.54 | 3.09 | 0.68 | 2.00 | 2.00 | 648.03 | 648.04 | 648.40 | 648.04 | 19.34 | 2.13 | 1.62 | 0.94 | 10.27 |
| B240 | B230 | 241.45 | 245.45 | 0.013 | 0.35 | Circular | 1 | n/a | 2 | 0.0035 | 648.81 | 647.97 | 646.81 | 645.97 | 0.39 | 2.57 | 0.35 | 1.23 | 2.00 | 648.04 | 648.05 | 648.04 | 648.05 | 18.43 | 1.10 | 0.63 | 0.92 | 6.46 |
| B298 | B120 | 35.56 | 38.56 | 0.013 | 0.30 | Box | 1 | 5 | 3 | 0.003 | 645.65 | 645.54 | 642.65 | 642.54 | 1.00 | 5.00 | 1.66 | 3.00 | 3.00 | 646.46 | 646.47 | 647.07 | 646.51 | 26.88 | 24.95 | 24.09 | 0.78 | 5.30 |
| B299 | B298 | 16.15 | 16.15 | 0.013 | 0.30 | Box | 1 | 5 | 3 | 0.003 | 645.70 | 645.65 | 642.70 | 642.65 | 1.00 | 4.98 | 1.66 | 3.00 | 3.00 | 646.47 | 646.53 | 646.51 | 646.58 | 26.49 | 24.84 | 5.97 | 0.82 | 5.42 |
| B300 | B299 | 58.43 | 61.93 | 0.013 | 0.30 | Box | 1 | 5 | 3 | 0.003 | 645.87 | 645.70 | 642.87 | 642.70 | 1.00 | 4.98 | 1.66 | 3.00 | 3.00 | 646.53 | 646.55 | 646.58 | 646.59 | 26.33 | 24.84 | 5.88 | 0.81 | 5.42 |
| B320 | B310 | 192.99 | 197.49 | 0.013 | 0.51 | Circular | 1 | n/a | 2 | 0.0051 | 647.16 | 646.18 | 645.16 | 644.18 | 0.79 | 4.62 | 1.70 | 1.85 | 2.00 | 646.84 | 647.01 | 646.96 | 647.06 | 25.18 | 5.35 | 5.18 | 0.80 | 5.48 |
| B330 | B320 | 116.13 | 120.13 | 0.013 | 0.50 | Circular | 1 | n/a | 2 | 0.0049 | 648.92 | 648.34 | 646.92 | 646.34 | 0.80 | 4.57 | 4.57 | 1.22 | 0.80 | 647.14 | 648.13 | 647.46 | 648.44 | 10.71 | 5.35 | 1.38 | 0.73 | 8.45 |
| B205 | B200 | 12.76 | 17.51 | 0.013 | 0.50 | Circular | 1 | n/a | 2 | 0.0049 | 645.94 | 645.88 | 643.94 | 643.88 | 0.28 | 2.50 | 0.21 | 2.00 | 2.00 | 646.98 | 646.98 | 647.55 | 646.98 | 26.28 | 0.66 | 18.11 | 0.77 | 5.36 |
| B206 | B200 | 70.93 | 77.64 | 0.013 | 0.50 | Circular | 1 | n/a | 3.5 | 0.0051 | 646.76 | 646.40 | 643.26 | 642.90 | 2.82 | 8.47 | 7.32 | 3.50 | 3.50 | 646.98 | 647.72 | 647.55 | 648.55 | 26.28 | 70.47 | 18.11 | 0.77 | 5.36 |
| B207 | B206 | 38.22 | 42.68 | 0.013 | 0.25 | Circular | 1 | n/a | 3.5 | 0.0042 | 646.89 | 646.79 | 643.39 | 643.29 | 3.50 | 7.51 | 7.32 | 3.50 | 3.50 | 647.72 | 647.93 | 648.55 | 648.76 | 26.10 | 70.47 | 13.36 | 0.74 | 7.20 |
| B211 | B210 | 54.50 | 58.75 | 0.013 | 0.51 | Circular | 1 | n/a | 2 | 0.0052 | 647.18 | 646.90 | 645.18 | 644.90 | 1.01 | 5.20 | 2.64 | 2.00 | 2.00 | 647.10 | 647.37 | 647.19 | 647.48 | 20.80 | 8.29 | 4.65 | 0.87 | 6.06 |
| B215 | B210 | 14.18 | 20.54 | 0.013 | 0.50 | Circular | 1 | n/a | 2 | 0.0051 | 646.97 | 646.90 | 644.97 | 644.90 | 0.55 | 3.80 | 0.85 | 2.00 | 2.00 | 647.10 | 647.12 | 647.19 | 647.13 | 20.80 | 2.67 | 4.65 | 0.87 | 6.06 |
| B225 | B220 | 32.68 | 37.18 | 0.013 | 0.50 | Circular | 1 | n/a | 2 | 0.0049 | 647.56 | 647.40 | 645.56 | 645.40 | 1.14 | 5.32 | 3.36 | 1.85 | 1.77 | 647.17 | 647.41 | 647.25 | 647.61 | 19.75 | 9.88 | 2.92 | 0.92 | 6.23 |
| B231 | B227 | 32.25 | 34.87 | 0.013 | 0.46 | Circular | 1 | n/a | 1.5 | 0.008 | 647.97 | 647.82 | 646.47 | 646.32 | 1.50 | 5.88 | 5.73 | 1.50 | 1.50 | 648.03 | 648.52 | 648.40 | 649.03 | 19.34 | 10.13 | 1.62 | 0.94 | 10.27 |
| B233 | B231 | 23.54 | 30.00 | 0.013 | 0.50 | Circular | 1 | n/a | 2 | 0.005 | 669.44 | 669.32 | 667.44 | 667.32 | 0.93 | 4.93 | 4.93 | 1.31 | 0.93 | 668.26 | 668.75 | 668.63 | 669.12 | 6.10 | 7.06 | 0.99 | 0.95 | 10.27 |
| B235 | B230 | 15.52 | 19.02 | 0.013 | 0.50 | Circular | 1 | n/a | 2 | 0.005 | 648.02 | 647.95 | 646.02 | 645.95 | 0.45 | 3.37 | 0.57 | 2.00 | 2.00 | 648.04 | 648.05 | 648.04 | 648.05 | 18.43 | 1.79 | 0.63 | 0.92 | 6.46 |
| B245 | B240 | 15.50 | 19.00 | 0.013 | 0.50 | Circular | 1 | n/a | 2 | 0.005 | 648.92 | 648.84 | 646.92 | 646.84 | 0.36 | 2.92 | 0.56 | 1.14 | 1.21 | 648.05 | 648.06 | 648.05 | 648.06 | 8.59 | 1.10 | 0.22 | 0.94 | 9.21 |
| B310 | B300 | 78.68 | 84.68 | 0.013 | 0.35 | Circular | 1 | n/a | 3 | 0.0035 | 646.18 | 645.90 | 643.18 | 642.90 | 1.47 | 5.52 | 2.70 | 3.00 | 3.00 | 646.55 | 646.84 | 646.59 | 646.96 | 25.70 | 19.08 | 5.88 | 0.81 | 5.42 |
| B305 | B300 | 12.79 | 22.16 | 0.013 | 0.50 | Circular | 1 | n/a | 2 | 0.0051 | 644.96 | 644.90 | 642.96 | 642.90 | 1.06 | 5.24 | 2.80 | 2.00 | 2.00 | 646.55 | 646.70 | 646.59 | 646.83 | 25.70 | 8.81 | 5.88 | 0.81 | 5.42 |
| B302 | B305 | 26.75 | 31.08 | 0.013 | -0.50 | Circular | 1 | n/a | 2 | 0.005 | 646.09 | 645.96 | 644.09 | 643.96 | 0.60 | 3.97 | 1.00 | 2.00 | 2.00 | 647.00 | 647.02 | 647.21 | 647.04 | 7.00 | 3.16 | 0.69 | 0.94 | 9.72 |
| B306 | B310 | 4.06 | 8.40 | 0.013 | 0.49 | Circular | 1 | n/a | 2 | 0.0049 | 646.20 | 646.18 | 644.20 | 644.18 | 1.76 | 5.71 | 5.33 | 2.00 | 2.00 | 646.84 | 646.93 | 646.96 | 647.38 | 25.18 | 16.73 | 5.18 | 0.80 | 5.48 |
| B307 | B435 | 20.18 | 22.18 | 0.013 | 0.50 | Circular | 1 | n/a | 2 | 0.005 | 645.42 | 645.32 | 643.42 | 643.32 | 0.27 | 2.48 | 0.20 | 2.00 | 2.00 | 646.48 | 646.48 | 646.47 | 646.48 | 6.83 | 0.64 | 0.10 | 0.95 | 11.10 |
| B317 | B306 | 39.11 | 42.20 | 0.013 | 0.50 | Circular | 1 | n/a | 2 | 0.0051 | 646.39 | 646.20 | 644.39 | 644.20 | 1.55 | 5.83 | 4.86 | 2.00 | 2.00 | 646.93 | 647.78 | 647.38 | 648.15 | 25.15 | 15.27 | 3.80 | 0.82 | 5.49 |
| B335 | B330 | 49.06 | 52.31 | 0.013 | 0.50 | Circular | 1 | n/a | 2 | 0.0049 | 649.19 | 648.95 | 647.19 | 646.95 | 0.80 | 4.57 | 2.76 | 1.27 | 1.19 | 648.13 | 648.46 | 648.44 | 648.68 | 10.27 | 5.35 | 1.38 | 0.73 | 8.45 |
| B600 | B207 | 278.51 | 279.76 | 0.013 | 0.50 | Circular | 1 | n/a | 3 | 0.0083 | 650.39 | 649.00 | 647.39 | 646.00 | 3.00 | 9.49 | 10.07 | 3.00 | 2.59 | 648.59 | 652.81 | 648.76 | 654.14 | 26.00 | 65.39 | 13.36 | 0.74 | 7.20 |
| C90 | C130 | 100.93 | 105.93 | 0.013 | 0.50 | Circular | 1 | n/a | 2 | 0.0051 | 647.50 | 647.00 | 645.50 | 645.00 | 1.32 | 5.66 | 4.31 | 1.85 | 1.73 | 646.73 | 647.36 | 647.23 | 647.78 | 9.38 | 12.45 | 1.91 | 0.74 | 8.81 |
| C105 | C135 | 47.67 | 54.67 | 0.013 | 0.4999 | Circular | 1 | n/a | 2 | 0.005 | 647.56 | 647.32 | 645.56 | 645.32 | 0.59 | 3.89 | 3.89 | 0.82 | 0.59 | 645.91 | 646.38 | 646.14 | 646.60 | 9.47 | 2.99 | 2.36 | 0.78 | 8.64 |
| C125 | C120 | 22.51 | 25.76 | 0.013 | 0.5 | Circular | 1 | n/a | 2 | 0.005 | 641.91 | 641.80 | 639.91 | 639.80 | 0.43 | 3.27 | 3.27 | 0.60 | 0.43 | 640.23 | 640.51 | 640.40 | 640.66 | 26.13 | 1.64 | 0.37 | 0.82 | 5.39 |
| C130 | C135 | 29.39 | 33.39 | 0.013 | 0.4992 | Circular | 1 | n/a | 2 | 0.0051 | 646.97 | 646.82 | 644.97 | 644.82 | 1.32 | 5.66 | 5.92 | 1.76 | 1.27 | 646.09 | 646.73 | 645.57 | 647.23 | 9.47 | 12.45 | 2.36 | 0.78 | 8.64 |
| C135 | C150 | 24.96 | 28.96 | 0.013 | 1.2308 | Circular | 1 | n/a | 2 | 0.0123 | 645.32 | 645.02 | 643.32 | 643.02 | 1.09 | 8.27 | 7.75 | 1.63 | 1.15 | 644.16 | 644.95 | 645.10 | 645.57 | 11.62 | 14.46 | 3.16 | 0.81 | 7.96 |
| C140 | C150 | 193.39 | 195.39 | 0.013 | 0.5016 | Circular | 1 | n/a | 2 | 0.0051 | 644.51 | 643.54 | 642.51 | 641.54 | 0.85 | 4.78 | 1.94 | 1.65 | 2.00 | 643.97 | 644.16 | 644.77 | 644.24 | 11.62 | 6.08 | 3.16 | 0.81 | 7.96 |
| C150 | C160 | 304.45 | 306.45 | 0.013 | 0.9348 | Circular | 1 | n/a | 2 | 0.0094 | 643.51 | 640.66 | 641.51 | 638.66 | 1.44 | 7.85 | 7.84 | 2.00 | 1.44 | 640.10 | 643.97 | 641.06 | 644.77 | 12.81 | 18.96 | 3.16 | 0.81 | 0.00 |

SYSTEM B WAS DESIGNED FOR 4% ANNUAL CHANCE STORM, AND WAS MODELED WITH GEOPAK DRAINAGE. TXDOT SYSTEM DESIGN STANDARD IS 10% ANNUAL CHANCE STORM. COSA 4% ANNUAL CHANCE WAS GREATER AND WAS USED FOR DESIGN.

STATE OF TEXAS
JASON P. SCHEPPERS
80675
REGISTERED PROFESSIONAL ENGINEER
1/18/13

| NO | REVISION | DRAWN | APPROVED | DATE |
|---|---|---|---|---|
| | | | | / / |
| | | | | / / |
| 1 | ADDENDUM | JPS | ETM | 1/18/13 |

URS 9901 IH10 WEST, SUITE 350 SAN ANTONIO, TEXAS 78230 (FIRM # 3162)
TEL: 210.377.3764 FAX: 210.377.0622 WWW.URSCORP.COM

MAESTAS & ASSOCIATES INC. 11550 I.H. 10 WEST SUITE 320 SAN ANTONIO, TEXAS 78230 (210) 366-1088
TBPE REGISTRATION No. F-333

CITY OF SAN ANTONIO
CAPITAL IMPROVEMENTS MANAGEMENT SERVICES DEPARTMENT

MARKET STREET REALIGNMENT

SYSTEM B & C
HYDRAULIC COMPUTATIONS

SHEET 2 OF 3

| | | | |
|---|---|---|---|
| 100% SUBMITTAL | PROJECT NO.: 40-00300 | | DATE: 1/15/2013 |
| DRAWN. BY: MM | DSGN. BY: MJM | CHKD. BY: EM&JS | SHEET NO.: 311 |

DATE: 1/15/2013 8:42:43 AM
FILE: DRN_HYD_B2.dgn

SYSTEM C WAS DESIGNED FOR 4% ANNUAL CHANCE STORM, AND WAS MODELED WITH GEOPAK DRAINAGE. TXDOT SYSTEM DESIGN STANDARD IS 10% ANNUAL CHANCE STORM. COSA 4% ANNUAL CHANCE WAS GREATER AND WAS USED FOR DESIGN.

**SYSTEM B INLET CONFIGURATION**

| ID | Station | Offset | Elevation | Type | Profile Type | Composite Spread Section | Curb Length | Curb Depression | Curb Height | Curb Depression Width | Grate Type | Grate Length | Grate Width | Grate Area | Grate Perimeter | Grate Clog Area |
|---|---|---|---|---|---|---|---|---|---|---|---|---|---|---|---|---|
| B170 | 19+64.15 | -16.01 | 647.92 | Curb | On Grade | 0.02 | 20 | 0.208 | 0.518 | 2 | n/a | n/a | n/a | n/a | n/a | n/a |
| B205 | 21+48.80 | 14.51 | 647.11 | Grate | Sag | 0.02 | n/a | n/a | n/a | n/a | Parallel 1 1/8 | 6 | 2.5 | 15 | 17 | 0.5 |
| B207 | 21+18.56 | -109.94 | 651.00 | Grate | Sag | 0.01 | n/a | n/a | n/a | n/a | Parallel 1 1/8 | 6 | 2.5 | 15 | 17 | 0.5 |
| B211 | 20+02.23 | -61.74 | 649.39 | Grate | Sag | 0.01 | n/a | n/a | n/a | n/a | Parallel 1 1/8 | 6 | 2.5 | 15 | 17 | 0.5 |
| B215 | 19+98.46 | 13.67 | 652.25 | Curb | On Grade | 0.013 | 10 | 0.167 | 0.333 | 14 | n/a | n/a | n/a | n/a | n/a | n/a |
| B216 | 19+92.42 | 15.66 | 652.09 | Curb | Sag | 0.02 | 3.667 | 0 | 0.518 | 0 | n/a | n/a | n/a | n/a | n/a | n/a |
| B231 | 13+62.77 | 8.00 | 673.45 | Curb | Sag | 0.03 | 10 | 0.07 | 0.208 | 3.479 | n/a | n/a | n/a | n/a | n/a | n/a |
| B233 | 13+50.58 | -18.00 | 673.37 | Curb | Sag | 0.02 | 3.313 | 0.208 | 0.333 | 15.5 | n/a | n/a | n/a | n/a | n/a | n/a |
| B235 | 17+10.09 | 13.00 | 654.70 | Curb | On Grade | 0.02 | 5 | 0.167 | 0.333 | 8 | n/a | n/a | n/a | n/a | n/a | n/a |
| B236 | 17+07.07 | 15.00 | 654.65 | Curb | Sag | 0.02 | 3.667 | 0 | 0.518 | 0 | n/a | n/a | n/a | n/a | n/a | n/a |
| B245 | 14+64.67 | 13.00 | 656.65 | Curb | On Grade | 0.02 | 5 | 0.167 | 0.333 | 8 | n/a | n/a | n/a | n/a | n/a | n/a |
| B246 | 14+61.64 | 15.00 | 656.65 | Curb | Sag | 0.02 | 3.667 | 0 | 0.518 | 0 | n/a | n/a | n/a | n/a | n/a | n/a |
| B305 | 10+83.08 | -4.34 | 648.26 | Curb | Sag | 0.02 | 20 | 0.208 | 0.518 | 2 | n/a | n/a | n/a | n/a | n/a | n/a |
| B306 | 24+04.90 | -11.00 | 648.64 | Curb | On Grade | 0.02 | 10 | 0.208 | 0.518 | 2 | n/a | n/a | n/a | n/a | n/a | n/a |
| B307 | 11+54.11 | -23.17 | 661.90 | Grate | On Grade | 0.02 | n/a | n/a | n/a | n/a | Parallel 1 1/8 | 3.58 | 1.28 | 4.58 | 9.72 | 0.5 |
| B317 | 11+37.25 | -5.68 | 653.71 | Grate | Sag | 0.01 | n/a | n/a | n/a | n/a | Parallel 1 1/8 | 6 | 2.5 | 15 | 17 | 0.5 |
| B335 | 23+39.25 | -26.62 | 652.51 | Grate | On Grade | 0.02 | n/a | n/a | n/a | n/a | Parallel 1 1/8 | 6 | 2.5 | 15 | 17 | 0.5 |
| B400 | 16+36.00 | 6.21 | 676.82 | Grate | On Grade | 0.02 | n/a | n/a | n/a | n/a | Parallel 1 1/8 | 3.58 | 1.28 | 4.58 | 9.72 | 0.5 |
| B410 | 17+56.98 | 6.21 | 678.60 | Grate | On Grade | 0.02 | n/a | n/a | n/a | n/a | Parallel 1 1/8 | 3.58 | 1.28 | 4.58 | 9.72 | 0.5 |
| B420 | 20+90.00 | -16.21 | 679.31 | Grate | On Grade | 0.02 | n/a | n/a | n/a | n/a | Parallel 1 1/8 | 3.58 | 1.28 | 4.58 | 9.72 | 0.5 |
| B430 | 22+10.06 | -16.20 | 675.21 | Grate | On Grade | 0.02 | n/a | n/a | n/a | n/a | Parallel 1 1/8 | 3.58 | 1.28 | 4.58 | 9.72 | 0.5 |
| C90 | 29+59.27 | 43.94 | 650.29 | Grate | Sag | 0.01 | n/a | n/a | n/a | n/a | Parallel 1 1/8 | 6 | 2.5 | 15 | 17 | 0.5 |
| C105 | 26+26.93 | 8.00 | 654.55 | Curb | On Grade | 0.02 | 10 | 0.208 | 0.518 | 2 | n/a | n/a | n/a | n/a | n/a | n/a |
| C125 | 37+33.53 | 3.07 | 645.82 | Grate | Sag | 0.00 | n/a | n/a | n/a | n/a | Parallel 1 1/8 | 6 | 2.5 | 15 | 17 | 0.5 |

1

**SYSTEM B INLET HYDRAULICS**

| ID | Station | Inlet Type | Profile Type | Discharge | Capacity | By Pass Flow | By Pass Flow Into | By Pass Node ID | Curb Length | Length Required | Computed Ponded Width | Computed Ponded Depth | Longitudinal Slope |
|---|---|---|---|---|---|---|---|---|---|---|---|---|---|
| B170 | 19+64.15 | Curb | On Grade | 3.13 | 3.13 | 0.00 | 0.00 | | 20.00 | 16.47 | 10.45 | 0.21 | 1.73 |
| B205 | 21+48.80 | Grate | Sag | 0.66 | 11.59 | 0.00 | 0.00 | | n/a | n/a | 4.99 | 0.09 | n/a |
| B207 | 21+18.56 | Grate | Sag | 3.57 | 9.28 | 0.00 | 0.00 | | n/a | n/a | 8.48 | 0.17 | n/a |
| B211 | 20+02.23 | Grate | Sag | 7.59 | 9.28 | 0.00 | 0.00 | | n/a | n/a | 14.04 | 0.28 | n/a |
| B215 | 19+98.46 | Curb | On Grade | 4.75 | 2.28 | 2.47 | 1.65 | B305 | 10.00 | 32.77 | 16.87 | 0.22 | 1.37 |
| B231 | 13+62.77 | Curb | Sag | 3.13 | 3.86 | 0.00 | 0.48 | | 10.00 | 47.01 | 7.00 | 0.19 | n/a |
| B233 | 13+50.58 | Curb | Sag | 7.06 | 7.41 | 0.00 | 0.00 | | 3.31 | 47.01 | 12.11 | 0.21 | n/a |
| B235 | 17+10.09 | Curb | On Grade | 3.04 | 1.39 | 1.65 | 0.82 | B215 | 5.00 | 17.36 | 11.92 | 0.24 | 0.81 |
| B245 | 14+64.67 | Curb | On Grade | 1.84 | 1.01 | 0.82 | 0.00 | B235 | 5.00 | 13.89 | 9.87 | 0.20 | 0.81 |
| B305 | 10+83.08 | Curb | Sag | 8.81 | 20.35 | 0.00 | 2.47 | | 20.00 | 47.01 | 14.88 | 0.30 | n/a |
| B306 | 24+04.90 | Curb | On Grade | 2.84 | 2.84 | 0.00 | 0.00 | | 10.00 | 8.54 | 16.22 | 0.32 | 0.14 |
| B307 | 11+54.11 | Grate | On Grade | 1.04 | 0.64 | 0.40 | 0.00 | | n/a | n/a | 5.19 | 0.10 | 8.00 |
| B317 | 11+37.25 | Grate | Sag | 15.15 | 9.28 | 0.00 | 0.00 | | n/a | n/a | 22.26 | 0.45 | n/a |
| B335 | 23+39.25 | Grate | On Grade | 7.91 | 4.85 | 3.05 | 0.00 | | n/a | n/a | 12.12 | 0.24 | 5.00 |
| B400 | 16+36.00 | Grate | On Grade | 1.29 | 0.81 | 0.48 | 0.46 | B231 | n/a | n/a | 7.84 | 0.16 | 1.36 |
| B410 | 17+56.98 | Grate | On Grade | 1.19 | 0.73 | 0.46 | 0.00 | B400 | n/a | n/a | 7.02 | 0.14 | 2.09 |
| B420 | 20+90.00 | Grate | On Grade | 0.93 | 0.59 | 0.34 | 0.00 | B430 | n/a | n/a | 5.67 | 0.11 | 4.02 |
| B430 | 22+10.06 | Grate | On Grade | 1.17 | 0.70 | 0.47 | 0.34 | C105 | n/a | n/a | 6.10 | 0.12 | 4.28 |
| C90 | 29+59.27 | Grate | Sag | 12.45 | 11.59 | 0 | 0 | | n/a | n/a | 60.82 | 0.61 | n/a |
| C105 | 26+26.93 | Curb | On Grade | 4.93 | 2.99 | 1.94 | 0.47 | | 10.00 | 24.73 | 10.92 | 0.22 | 3.38 |
| C125 | 37+33.53 | Grate | Sag | 1.64 | 11.59 | 0.00 | 0.00 | | n/a | n/a | 0.00 | 0.16 | n/a |

1

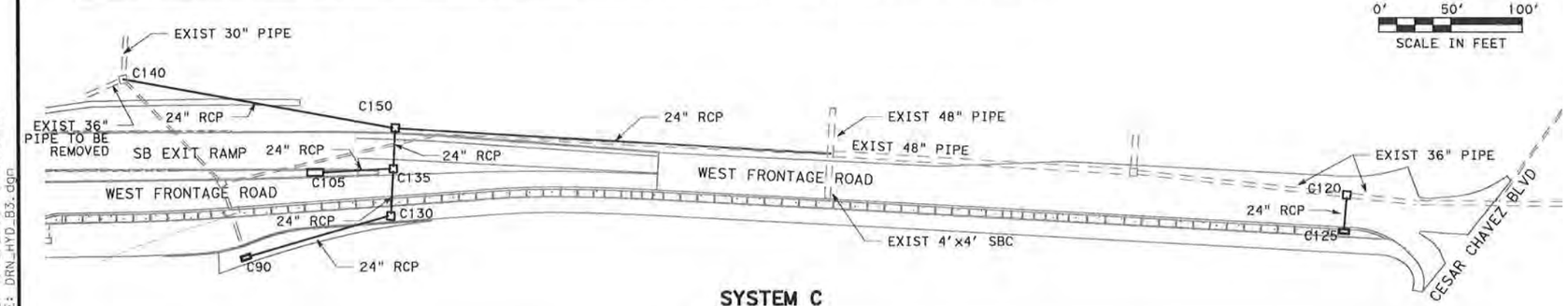


**SYSTEM C**

0' 50' 100'
SCALE IN FEET

STATE OF TEXAS
JASON P. SCHEPPERS
80675
REGISTERED PROFESSIONAL ENGINEER
1/18/13

| NO | REVISION | DRAWN | APPROVED | DATE |
|---|---|---|---|---|
| | | | | / / |
| | | | | / / |
| 1 | ADDENDUM 2 | JPS | ETM | 1/18/13 |

URS 9901 IHIO WEST, SUITE 350 SAN ANTONIO, TEXAS 78230 (FIRM # 3162)
TEL: 210.377.3764 FAX: 210.377.0622 WWW.URSCORP.COM

MAESTAS & ASSOCIATES INC. TBPE REGISTRATION No.: F-333 11550 I.H. 10 WEST SUITE 320 SAN ANTONIO, TEXAS 78230 (210) 366-1988

CITY OF SAN ANTONIO
CAPITAL IMPROVEMENTS MANAGEMENT SERVICES DEPARTMENT

MARKET STREET REALIGNMENT

SYSTEM B & C
HYDRAULIC COMPUTATIONS

SHEET 3 OF 3

| | | | |
|---|---|---|---|
| 100% SUBMITTAL | PROJECT NO.: 40-00300 | | DATE: 1/15/2013 |
| DRWN. BY: MM | DSGN. BY: MJM | CHKD. BY: EMB,JS | SHEET NO.: 312 |

DATE: 1/15/2013 8:43:37 AM
FILE: DRN_HYD_B3.dgn

EXT: URS | EXT: URS | DWG: URS | EXT: URS | DWG: URS

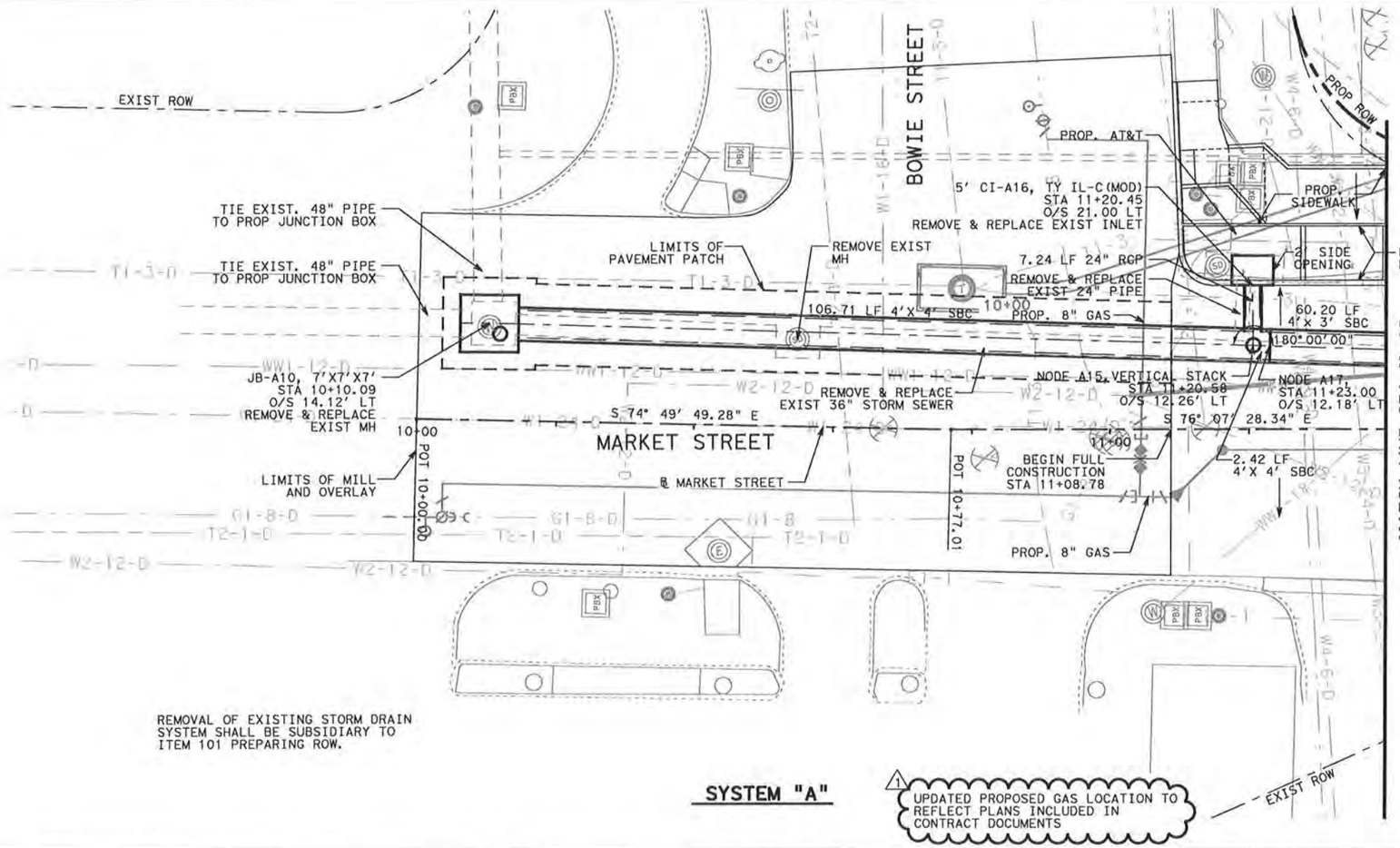


REMOVAL OF EXISTING STORM DRAIN SYSTEM SHALL BE SUBSIDIARY TO ITEM 101 PREPARING ROW.

## SYSTEM "A"

1 UPDATED PROPOSED GAS LOCATION TO REFLECT PLANS INCLUDED IN CONTRACT DOCUMENTS

HORIZ. 0' 10' 20'
VERT. 0' 5' 10'
SCALE IN FEET

## PLAN VIEW LEGEND

CI = CURB INLET DI = DROP INLET
JB = JUNCTION BOX TI = TRAFFIC INLET
MH = MANHOLE
PROPOSED STRUCTURES
EXIST EDGE OF ROADWAY/GUT
PROPOSED RIGHT OF WAY
EXIST RIGHT OF WAY
PROPOSED CONCRETE CURB
EXIST STORM SEWER
EXIST GAS LINE —G1-X-D—
EXIST SANITARY SEWER —WW1-X-D—
EXIST WATER —WX-X-D—
EXIST UNDGR TELEPHONE —TX-X-D—
EXIST UNDGR ELECTRIC —E1-1—
TIME WARNER CABLE —C1-1—
EXIST STEAM LINES —W4-X-D—
EXIST CHILLED WATER —W3-X-D—

FOR LOCATION OF UNDERGROUND ELECTRIC AND GAS FACILITIES, TELEPHONE CABLES, AND TIME WARNER CABLE TV CALL TEXAS STATE WIDE ONE CALL LOCATOR NUMBER 1-800-545-6005 48 HOURS PRIOR BEFORE BEGINNING ANY EXCAVATION.

DUE TO FEDERAL REGULATION TITLE 49, PART 192.181, C.P.S. MUST MAINTAIN ACCESS TO GAS VALVES AT ALL TIMES. THE CONTRACTOR MUST PROTECT AND WORK AROUND ANY GAS VALVES THAT ARE IN THE PROJECT AREA.

THE CONTRACTOR WILL BE RESPONSIBLE FOR PROTECTING C.P.S. OVERHEAD AND UNDERGROUND ELECTRIC FACILITIES IF ADJACENT TO WORK AREAS.

THE CONTRACTOR WILL HAVE RESPONSIBILITY TO PROTECT AND SUPPORT CABLE TV AND TELEPHONE COMPANY PLANT DURING CONSTRUCTION.

THE EXISTENCE AND LOCATION OF UTILITIES INDICATED ON THE PLAN ARE TAKEN FROM AVAILABLE RECORDS AND ARE NOT GUARANTEED TO BE ACCURATE.

CONTRACTOR AND/OR CONTRACTOR'S INDEPENDENTLY RETAINED EMPLOYEE OR STRUCTURAL DESIGN/GEOTECHNICAL/SAFETY EQUIPMENT CONSULTANT, IF ANY, SHALL REVIEW THESE PLANS AND ANY AVAILABLE GEOTECHNICAL INFORMATION AND THE ANTICIPATED INSTALLATION SITE(S) IN ORDER TO DEVELOP THE CONTRACTOR'S PLANS TO IMPLEMENT THE PROJECT DESCRIBED IN THE CONTRACT DOCUMENTS. THE CONTRACTOR'S PLANS SHALL PROVIDE FOR ADEQUATE TRENCH SAFETY SYSTEMS THAT COMPLY WITH, AS A MINIMUM, OSHA STANDARDS FOR TRENCH EXCAVATIONS. CONTRACTOR AND/OR CONTRACTOR'S INDEPENDENTLY RETAINED EMPLOYEE OR SAFETY CONSULTANT SHALL DEVELOP AND IMPLEMENT A TRENCH SAFETY PROGRAM IN ACCORDANCE WITH OSHA STANDARDS GOVERNING THE PRESENCE AND ACTIVITIES OF INDIVIDUALS WORKING IN AND AROUND TRENCH EXCAVATION.

## PROFILE VIEW LEGEND

PROPOSED STRUCTURES
PROPOSED GRADE LINE
EXISTING GRADE AT PGL
EGL
HGL

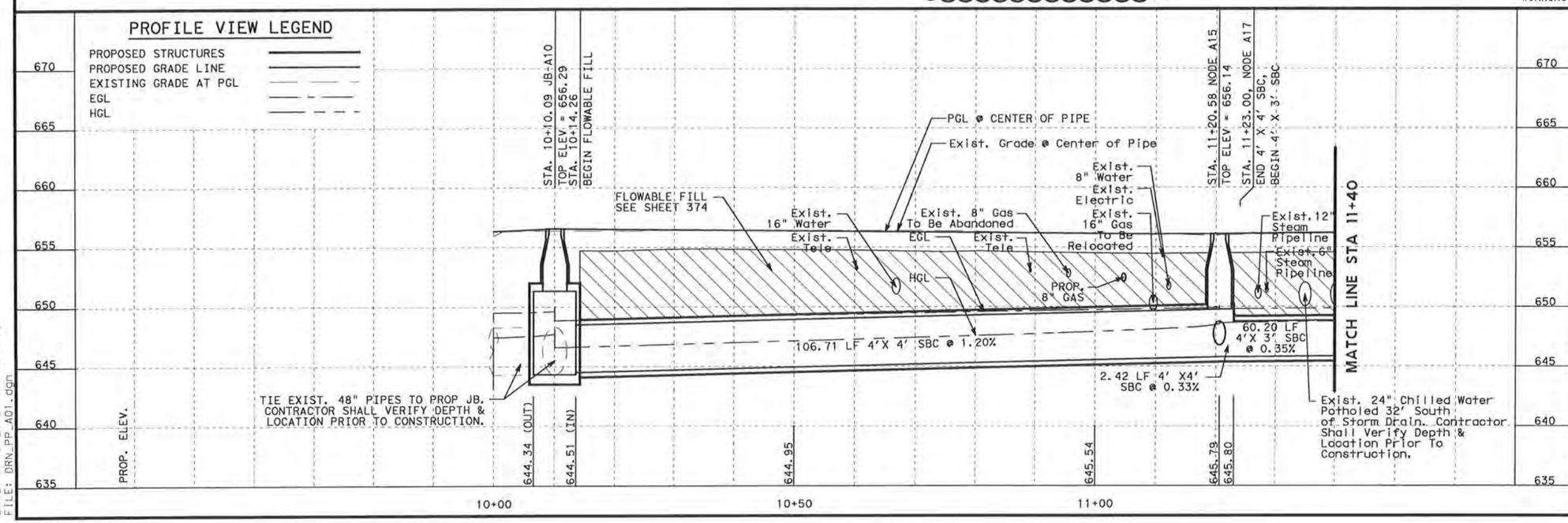


STATE OF TEXAS
ERNEST T. MAESTAS
52938
REGISTERED PROFESSIONAL ENGINEER
1-18-13

| NO | REVISION | DRAWN | APPROVED | DATE |
|---|---|---|---|---|
| 1 | ADDENDUM 2 | JPS | ETM | 1/18/13 |

URS 9901 IH10 WEST, SUITE 350 SAN ANTONIO, TEXAS 78230 (FIRM # 3162)
TEL: 210.377.3764 FAX: 210.377.0622 WWW.URSCORP.COM

MAESTAS & ASSOCIATES INC. TBPE REGISTRATION No.: F-333 11550 I.H. 10 WEST SUITE 320 SAN ANTONIO, TEXAS 78230 (210) 366-1988

CITY OF SAN ANTONIO
CAPITAL IMPROVEMENTS MANAGEMENT SERVICES DEPARTMENT

MARKET STREET REALIGNMENT
MARKET STREET
STORM SEWER SYSTEM "A"
PLAN & PROFILE
BEGIN TO STA 11+40

SHEET 1 OF 7

| 100% SUBMITTAL | PROJECT NO.: 40-00300 | DATE: 1/15/2013 |
|---|---|---|
| DRWN. BY: KG&CG | DSGN. BY: MJM | CHKD. BY: EM&JS | SHEET NO.: 313 |

DATE: 1/15/2013 8:44:22 AM
FILE: DRN_PP_A01.dgn

*CONTRACTOR SHALL TIE ALL 3" AND 4" LATERALS WITH FITTINGS AND CLEANOUTS TO THE RELOCATED DRAIN LINE AND REMOVE & REPLACE EXISTING BRICK PAVERS

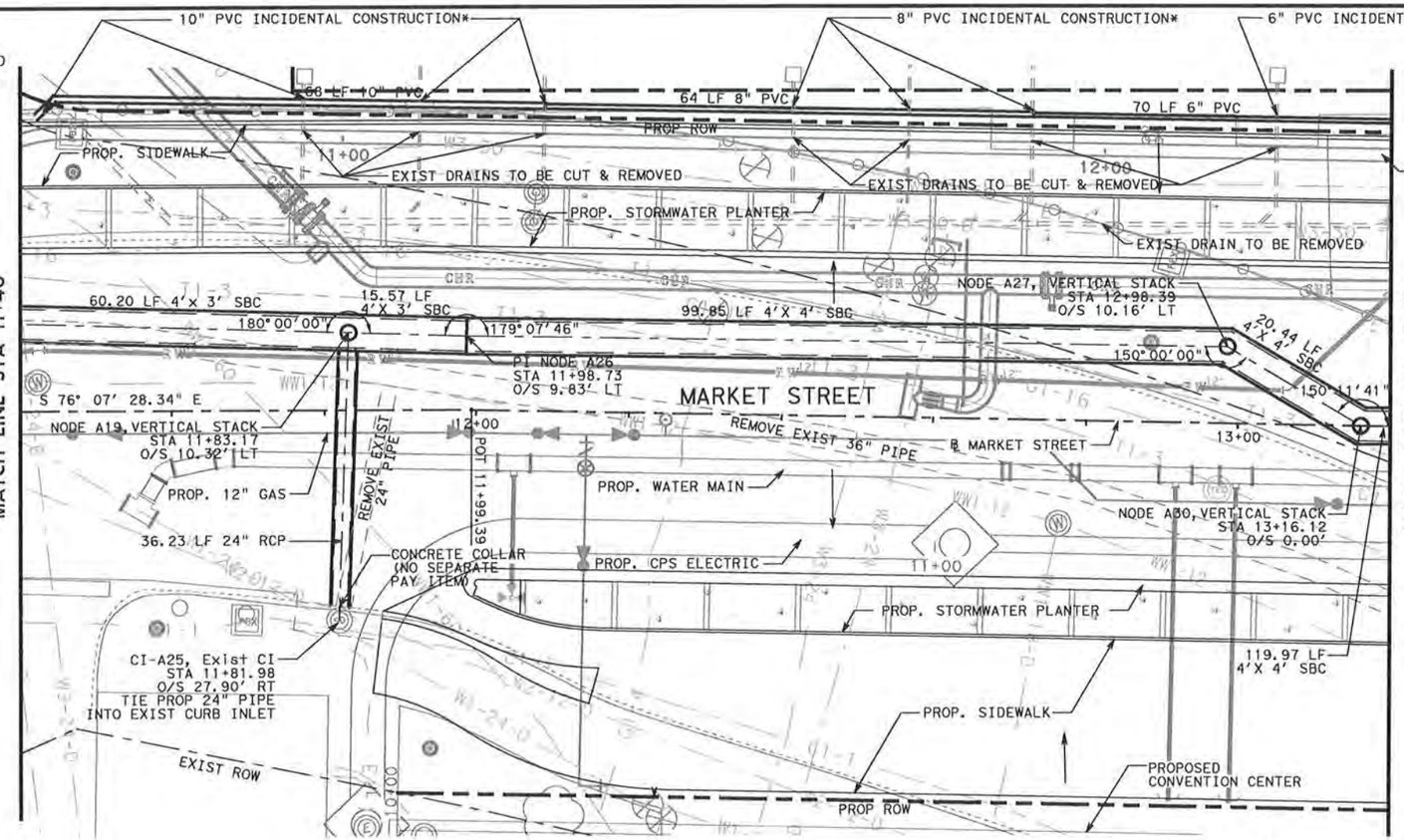


REMOVAL OF EXISTING STORM DRAIN SYSTEM SHALL BE SUBSIDIARY TO ITEM 101 PREPARING ROW.

## SYSTEM "A"

1 UPDATED PROPOSED CHILLED WATER & GAS LOCATION TO REFLECT PLANS INCLUDED IN CONTRACT DOCUMENTS

HORIZ. 0' 10' 20'
VERT. 0' 5' 10'
SCALE IN FEET

## PLAN VIEW LEGEND

| | |
|---|---|
| CI = CURB INLET | DI = DROP INLET |
| JB = JUNCTION BOX | TI = TRAFFIC INLET |
| MH = MANHOLE | |
| PROPOSED STRUCTURES | |
| EXIST EDGE OF ROADWAY/GUT | |
| PROPOSED RIGHT OF WAY | |
| EXIST RIGHT OF WAY | |
| PROPOSED CONCRETE CURB | |
| EXIST STORM SEWER | |
| EXIST GAS LINE | —G1-X-D— |
| EXIST SANITARY SEWER | —WW1-X-D— |
| EXIST WATER | —WX-X-D— |
| EXIST UNDGR TELEPHONE | —TX-X-D— |
| EXIST UNDGR ELECTRIC | —E1-1— |
| TIME WARNER CABLE | —C1-1— |
| EXIST STEAM LINES | —W4-X-D— |
| EXIST CHILLED WATER | —W3-X-D— |

FOR LOCATION OF UNDERGROUND ELECTRIC AND GAS FACILITIES, TELEPHONE CABLES, AND TIME WARNER CABLE TV CALL TEXAS STATE WIDE ONE CALL LOCATOR NUMBER 1-800-545-6005 48 HOURS PRIOR BEFORE BEGINNING ANY EXCAVATION.

DUE TO FEDERAL REGULATION TITLE 49, PART 192.181, C.P.S. MUST MAINTAIN ACCESS TO GAS VALVES AT ALL TIMES. THE CONTRACTOR MUST PROTECT AND WORK AROUND ANY GAS VALVES THAT ARE IN THE PROJECT AREA.

THE CONTRACTOR WILL BE RESPONSIBLE FOR PROTECTING C.P.S. OVERHEAD AND UNDERGROUND ELECTRIC FACILITIES IF ADJACENT TO WORK AREAS.

THE CONTRACTOR WILL HAVE RESPONSIBILITY TO PROTECT AND SUPPORT CABLE TV AND TELEPHONE COMPANY PLANT DURING CONSTRUCTION.

THE EXISTENCE AND LOCATION OF UTILITIES INDICATED ON THE PLAN ARE TAKEN FROM AVAILABLE RECORDS AND ARE NOT GUARANTEED TO BE ACCURATE.

CONTRACTOR AND/OR CONTRACTOR'S INDEPENDENTLY RETAINED EMPLOYEE OR STRUCTURAL DESIGN/GEOTECHNICAL/SAFETY EQUIPMENT CONSULTANT, IF ANY, SHALL REVIEW THESE PLANS AND ANY AVAILABLE GEOTECHNICAL INFORMATION AND THE ANTICIPATED INSTALLATION SITE(S) IN ORDER TO DEVELOP THE CONTRACTOR'S PLANS TO IMPLEMENT THE PROJECT DESCRIBED IN THE CONTRACT DOCUMENTS. THE CONTRACTOR'S PLANS SHALL PROVIDE FOR ADEQUATE TRENCH SAFETY SYSTEMS THAT COMPLY WITH, AS A MINIMUM, OSHA STANDARDS FOR TRENCH EXCAVATIONS. CONTRACTOR AND/OR CONTRACTOR'S INDEPENDENTLY RETAINED EMPLOYEE OR SAFETY CONSULTANT SHALL DEVELOP AND IMPLEMENT A TRENCH SAFETY PROGRAM IN ACCORDANCE WITH OSHA STANDARDS GOVERNING THE PRESENCE AND ACTIVITIES OF INDIVIDUALS WORKING IN AND AROUND TRENCH EXCAVATION.

## PROFILE VIEW LEGEND

| | |
|---|---|
| PROPOSED STRUCTURES | |
| PROPOSED GRADE LINE | |
| EXISTING GRADE AT PGL | |
| EGL | |
| HGL | |

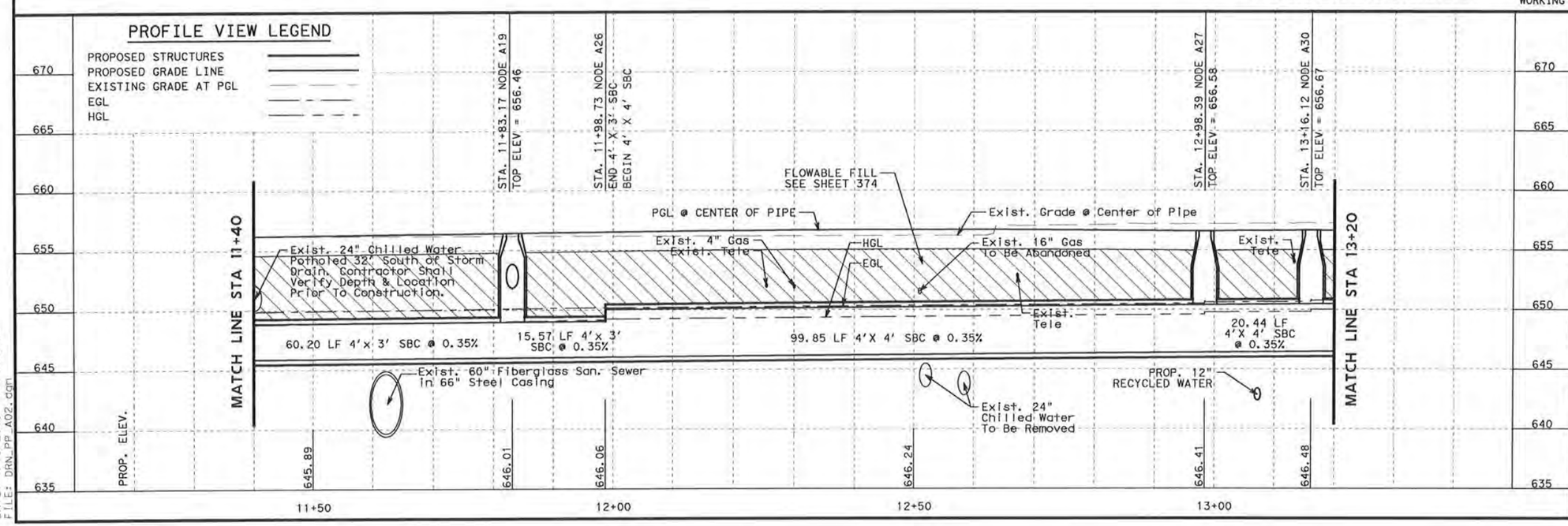


STATE OF TEXAS
ERNEST T. MAESTAS
52938
REGISTERED PROFESSIONAL ENGINEER

1-18-13

| NO | REVISION | DRAWN | APPROVED | DATE |
|---|---|---|---|---|
| 1 | ADDENDUM 2 | JPS | ETM | 1/18/13 |

URS 9901 IH10 WEST, SUITE 350 SAN ANTONIO, TEXAS 78230 (FIRM # 3162) TEL: 210.377.3764 FAX: 210.377.0622 WWW.URSCORP.COM

MAESTAS & ASSOCIATES INC. 11550 I.H. 10 WEST SUITE 323 SAN ANTONIO, TEXAS 78230 (210) 366-1888 TBPE REGISTRATION No.: F-333

CITY OF SAN ANTONIO
CAPITAL IMPROVEMENTS MANAGEMENT SERVICES DEPARTMENT

MARKET STREET REALIGNMENT

MARKET STREET
STORM SEWER SYSTEM "A"
PLAN & PROFILE
STA 11+40 TO STA 13+20

SHEET 2 OF 7

| | | |
|---|---|---|
| 100% SUBMITTAL | PROJECT NO.: 40-00300 | DATE: 1/15/2013 |
| DRWN. BY: KG&CG | DSGN. BY: MJM / CHKD. BY: EM&JS | SHEET NO.: 314 |

DATE: 1/15/2013 8:44:38 AM
FILE: DRN_PP_A02.dgn

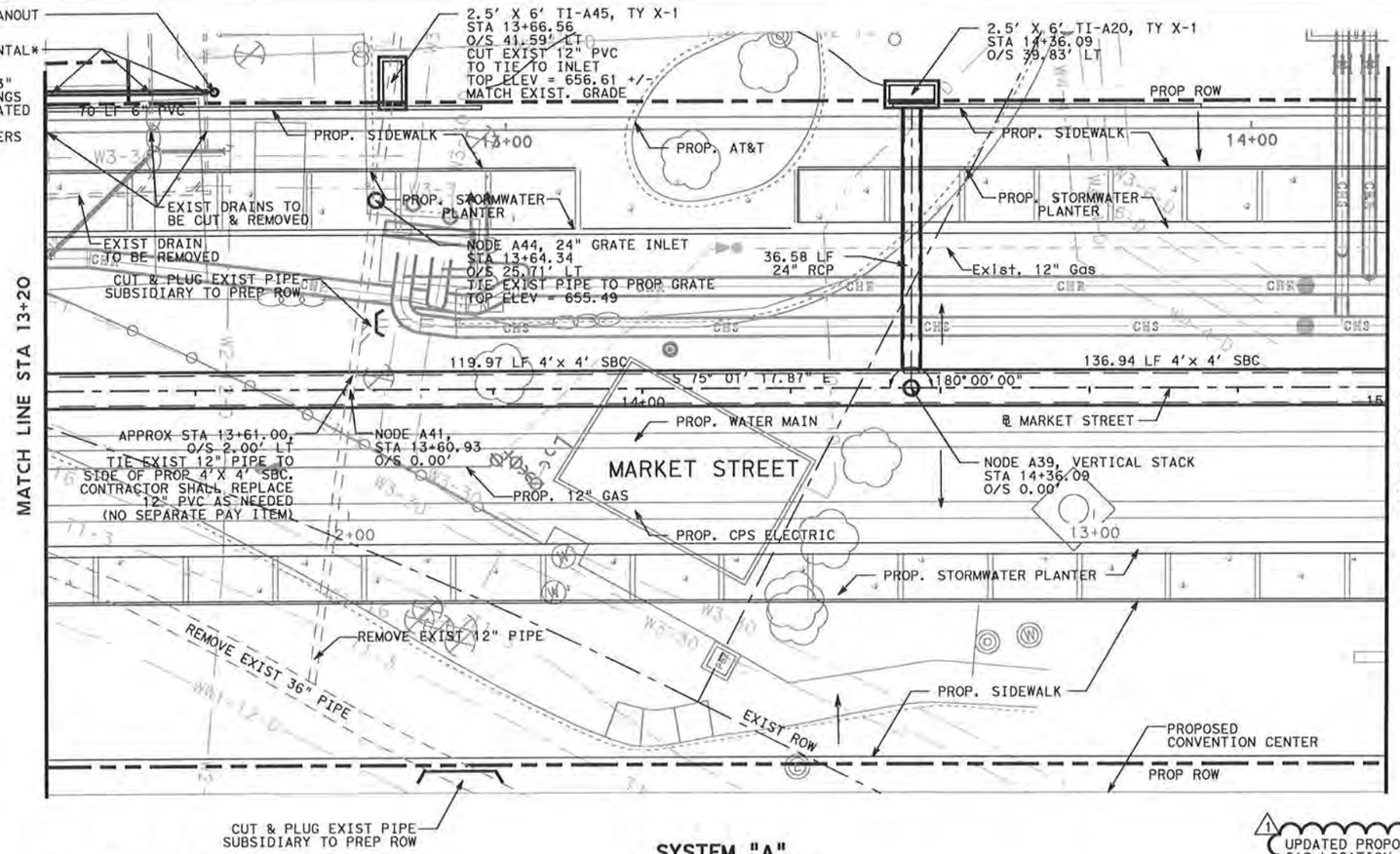


REMOVAL OF EXISTING STORM DRAIN SYSTEM SHALL BE SUBSIDIARY TO ITEM 101 PREPARING ROW.

## SYSTEM "A"

1 UPDATED PROPOSED CHILLED WATER & GAS LOCATION TO REFLECT PLANS INCLUDED IN CONTRACT DOCUMENTS

HORIZ. 0' 10' 20'
VERT. 0' 5' 10'
SCALE IN FEET

## PLAN VIEW LEGEND

| | |
|---|---|
| CI = CURB INLET | DI = DROP INLET |
| JB = JUNCTION BOX | TI = TRAFFIC INLET |
| MH = MANHOLE | |
| PROPOSED STRUCTURES | |
| EXIST EDGE OF ROADWAY/GUT | |
| PROPOSED RIGHT OF WAY | |
| EXIST RIGHT OF WAY | |
| PROPOSED CONCRETE CURB | |
| EXIST STORM SEWER | |
| EXIST GAS LINE | —GI-X-D— |
| EXIST SANITARY SEWER | —WW1-X-D— |
| EXIST WATER | —WX-X-D— |
| EXIST UNDGR TELEPHONE | —TX-X-D— |
| EXIST UNDGR ELECTRIC | —EI-I— |
| TIME WARNER CABLE | —CI-I— |
| EXIST STEAM LINES | —W4-X-D— |
| EXIST CHILLED WATER | —W3-X-D— |

FOR LOCATION OF UNDERGROUND ELECTRIC AND GAS FACILITIES, TELEPHONE CABLES, AND TIME WARNER CABLE TV CALL TEXAS STATE WIDE ONE CALL LOCATOR NUMBER 1-800-545-6005 48 HOURS PRIOR BEFORE BEGINNING ANY EXCAVATION.

DUE TO FEDERAL REGULATION TITLE 49, PART 192.181, C.P.S. MUST MAINTAIN ACCESS TO GAS VALVES AT ALL TIMES. THE CONTRACTOR MUST PROTECT AND WORK AROUND ANY GAS VALVES THAT ARE IN THE PROJECT AREA.

THE CONTRACTOR WILL BE RESPONSIBLE FOR PROTECTING C.P.S. OVERHEAD AND UNDERGROUND ELECTRIC FACILITIES IF ADJACENT TO WORK AREAS.

THE CONTRACTOR WILL HAVE RESPONSIBILITY TO PROTECT AND SUPPORT CABLE TV AND TELEPHONE COMPANY PLANT DURING CONSTRUCTION.

THE EXISTENCE AND LOCATION OF UTILITIES INDICATED ON THE PLAN ARE TAKEN FROM AVAILABLE RECORDS AND ARE NOT GUARANTEED TO BE ACCURATE.

CONTRACTOR AND/OR CONTRACTOR'S INDEPENDENTLY RETAINED EMPLOYEE OR STRUCTURAL DESIGN/GEOTECHNICAL/SAFETY EQUIPMENT CONSULTANT, IF ANY, SHALL REVIEW THESE PLANS AND ANY AVAILABLE GEOTECHNICAL INFORMATION AND THE ANTICIPATED INSTALLATION SITE(S) IN ORDER TO DEVELOP THE CONTRACTOR'S PLANS TO IMPLEMENT THE PROJECT DESCRIBED IN THE CONTRACT DOCUMENTS. THE CONTRACTOR'S PLANS SHALL PROVIDE FOR ADEQUATE TRENCH SAFETY SYSTEMS THAT COMPLY WITH, AS A MINIMUM, OSHA STANDARDS FOR TRENCH EXCAVATIONS. CONTRACTOR AND/OR CONTRACTOR'S INDEPENDENTLY RETAINED EMPLOYEE OR SAFETY CONSULTANT SHALL DEVELOP AND IMPLEMENT A TRENCH SAFETY PROGRAM IN ACCORDANCE WITH OSHA STANDARDS GOVERNING THE PRESENCE AND ACTIVITIES OF INDIVIDUALS WORKING IN AND AROUND TRENCH EXCAVATION.

## PROFILE VIEW LEGEND

| | |
|---|---|
| PROPOSED STRUCTURES | |
| PROPOSED GRADE LINE | |
| EXISTING GRADE AT PGL | |
| EGL | |
| HGL | |

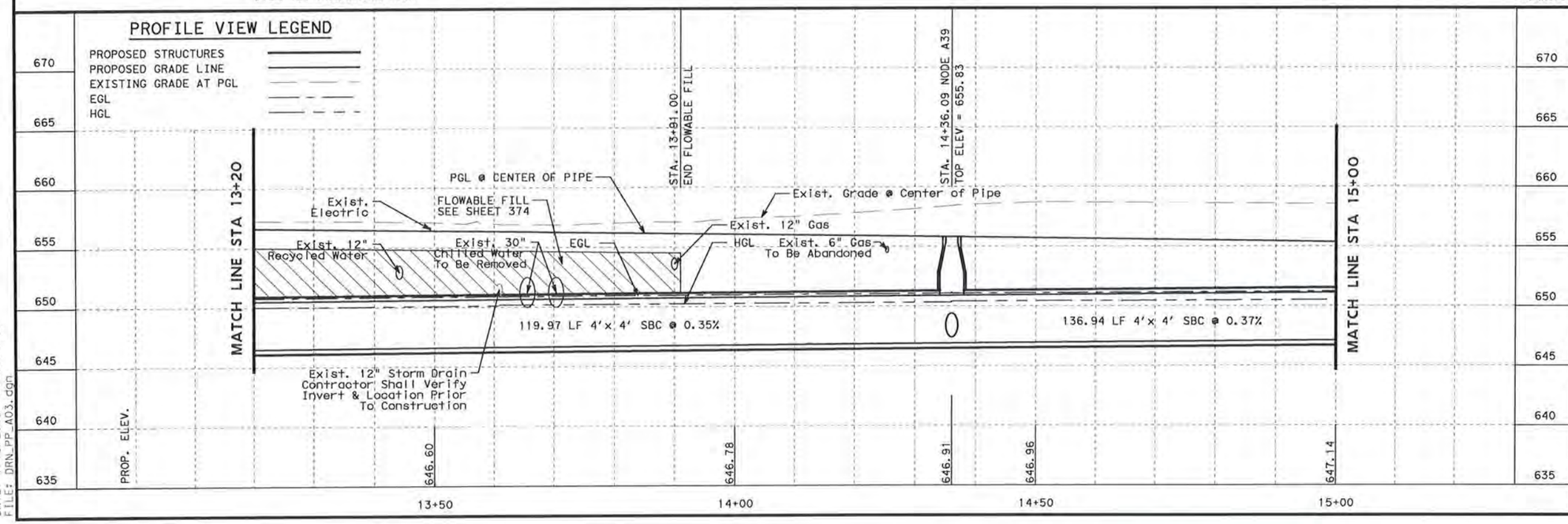


STATE OF TEXAS
ERNEST T. MAESTAS
52938
REGISTERED PROFESSIONAL ENGINEER
1-18-13

| NO | REVISION | DRAWN | APPROVED | DATE |
|---|---|---|---|---|
| | | | | / / |
| | | | | / / |
| 1 | ADDENDUM 2 | JPS | ETM | 1/18/13 |

URS 9901 IH10 WEST, SUITE 350 SAN ANTONIO, TEXAS 78230 (FIRM # 31622) TEL: 210.377.3764 FAX: 210.377.0622 WWW.URSCORP.COM

MAESTAS & ASSOCIATES INC. TBPE REGISTRATION No.: F-333 11550 I.H. 10 WEST SUITE 320 SAN ANTONIO, TEXAS 78230 (210) 366-1888

CITY OF SAN ANTONIO
CAPITAL IMPROVEMENTS MANAGEMENT SERVICES DEPARTMENT

MARKET STREET REALIGNMENT

MARKET STREET
STORM SEWER SYSTEM "A"
PLAN & PROFILE
STA 13+20 TO STA 15+00

SHEET 3 OF 7

| | | |
|---|---|---|
| 100% SUBMITTAL | PROJECT NO.: 40-00300 | DATE: 1/15/2013 |
| DRWN. BY: KG&CG | DSGN. BY: MJM CHKD. BY: EM&JS | SHEET NO.: 315 |

DATE: 1/15/2013 8:44:54 AM
FILE: DRN_PP_A03.dgn

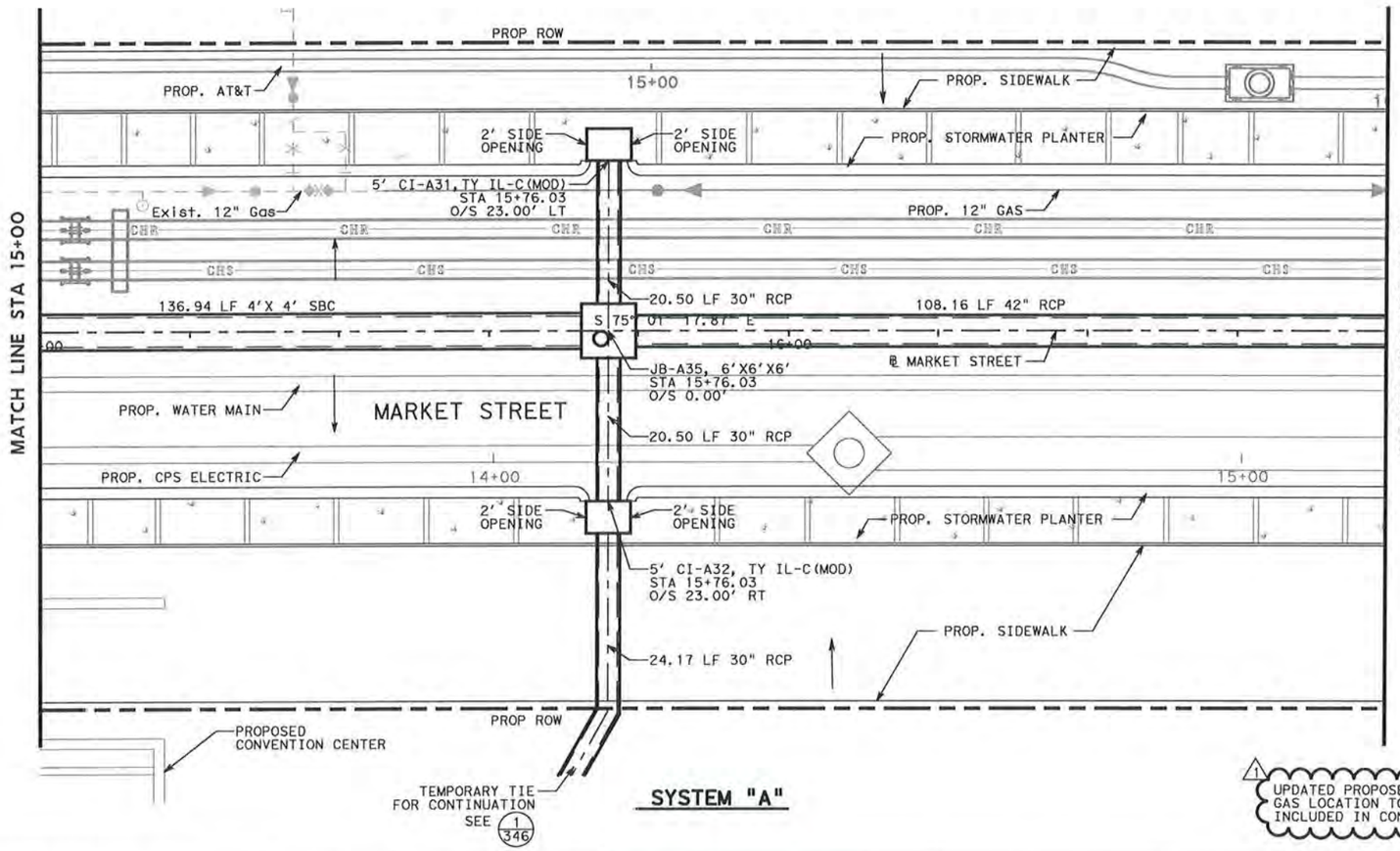


## SYSTEM "A"

1 UPDATED PROPOSED CHILLED WATER & GAS LOCATION TO REFLECT PLANS INCLUDED IN CONTRACT DOCUMENTS

HORIZ. 0' 10' 20'
VERT. 0' 5' 10'
SCALE IN FEET

## PLAN VIEW LEGEND

CI = CURB INLET
DI = DROP INLET
JB = JUNCTION BOX
TI = TRAFFIC INLET
MH = MANHOLE
PROPOSED STRUCTURES
EXIST EDGE OF ROADWAY/GUT
PROPOSED RIGHT OF WAY
EXIST RIGHT OF WAY
PROPOSED CONCRETE CURB
EXIST STORM SEWER
EXIST GAS LINE —GI-X-D—
EXIST SANITARY SEWER —WW1-X-D—
EXIST WATER —WX-X-D—
EXIST UNDGR TELEPHONE —TX-X-D—
EXIST UNDGR ELECTRIC —E1-1—
TIME WARNER CABLE —C1-1—
EXIST STEAM LINES —W4-X-D—
EXIST CHILLED WATER —W3-X-D—

FOR LOCATION OF UNDERGROUND ELECTRIC AND GAS FACILITIES, TELEPHONE CABLES, AND TIME WARNER CABLE TV CALL TEXAS STATE WIDE ONE CALL LOCATOR NUMBER 1-800-545-6005 48 HOURS PRIOR BEFORE BEGINNING ANY EXCAVATION.

DUE TO FEDERAL REGULATION TITLE 49, PART 192.181, C.P.S. MUST MAINTAIN ACCESS TO GAS VALVES AT ALL TIMES. THE CONTRACTOR MUST PROTECT AND WORK AROUND ANY GAS VALVES THAT ARE IN THE PROJECT AREA.

THE CONTRACTOR WILL BE RESPONSIBLE FOR PROTECTING C.P.S. OVERHEAD AND UNDERGROUND ELECTRIC FACILITIES IF ADJACENT TO WORK AREAS.

THE CONTRACTOR WILL HAVE RESPONSIBILITY TO PROTECT AND SUPPORT CABLE TV AND TELEPHONE COMPANY PLANT DURING CONSTRUCTION.

THE EXISTENCE AND LOCATION OF UTILITIES INDICATED ON THE PLAN ARE TAKEN FROM AVAILABLE RECORDS AND ARE NOT GUARANTEED TO BE ACCURATE.

CONTRACTOR AND/OR CONTRACTOR'S INDEPENDENTLY RETAINED EMPLOYEE OR STRUCTURAL DESIGN/GEOTECHNICAL/SAFETY EQUIPMENT CONSULTANT, IF ANY, SHALL REVIEW THESE PLANS AND ANY AVAILABLE GEOTECHNICAL INFORMATION AND THE ANTICIPATED INSTALLATION SITE(S) IN ORDER TO DEVELOP THE CONTRACTOR'S PLANS TO IMPLEMENT THE PROJECT DESCRIBED IN THE CONTRACT DOCUMENTS. THE CONTRACTOR'S PLANS SHALL PROVIDE FOR ADEQUATE TRENCH SAFETY SYSTEMS THAT COMPLY WITH, AS A MINIMUM, OSHA STANDARDS FOR TRENCH EXCAVATIONS. CONTRACTOR AND/OR CONTRACTOR'S INDEPENDENTLY RETAINED EMPLOYEE OR SAFETY CONSULTANT SHALL DEVELOP AND IMPLEMENT A TRENCH SAFETY PROGRAM IN ACCORDANCE WITH OSHA STANDARDS GOVERNING THE PRESENCE AND ACTIVITIES OF INDIVIDUALS WORKING IN AND AROUND TRENCH EXCAVATION.

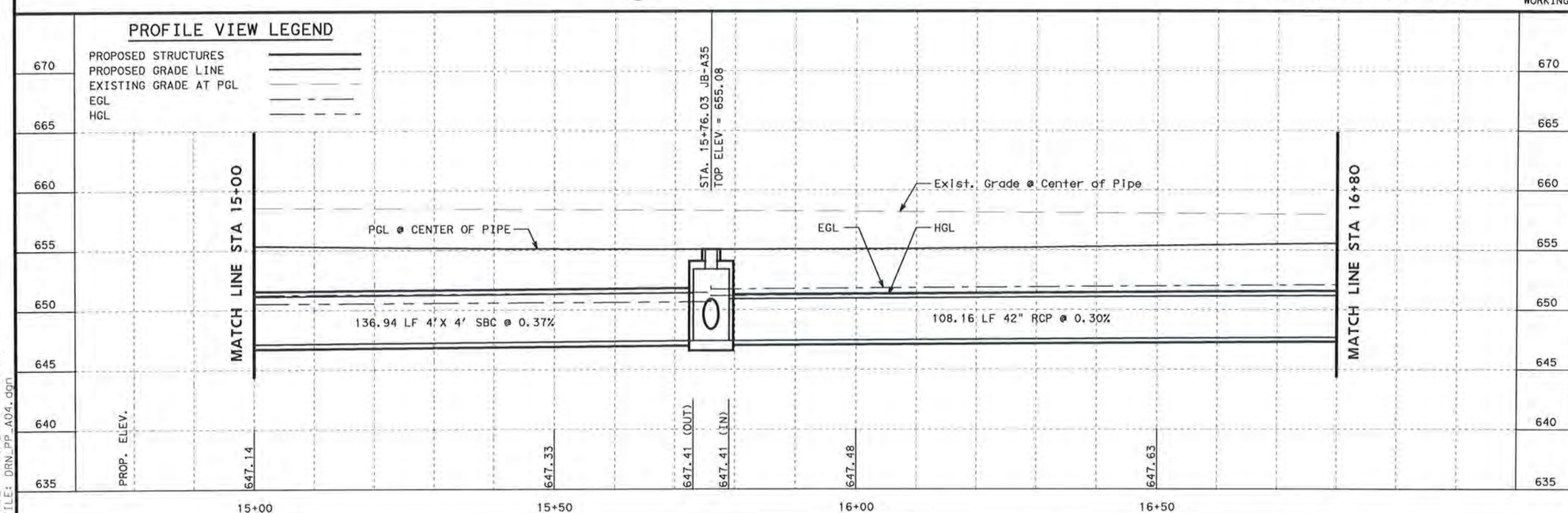


STATE OF TEXAS
ERNEST T. MAESTAS
52938
REGISTERED PROFESSIONAL ENGINEER

1-18-13

| NO | REVISION | DRAWN | APPROVED | DATE |
|---|---|---|---|---|
| | | | | / / |
| | | | | / / |
| 1 | ADDENDUM 2 | JPS | ETM | 1/18/13 |

URS 9901 IH10 WEST, SUITE 350 SAN ANTONIO, TEXAS 78230 (FIRM # 3162)
TEL: 210.377.3764 FAX: 210.377.0622 WWW.URSCORP.COM

MAESTAS & ASSOCIATES INC. TBPE REGISTRATION No.: F-033 11550 I.H. 10 WEST SUITE 320 SAN ANTONIO, TEXAS 78230 (210) 366-1988

CITY OF SAN ANTONIO
CAPITAL IMPROVEMENTS MANAGEMENT SERVICES DEPARTMENT

MARKET STREET REALIGNMENT

MARKET STREET
STORM SEWER SYSTEM "A"
PLAN & PROFILE
STA 15+00 TO STA 16+80

SHEET 4 OF 7

| 100% SUBMITTAL | PROJECT NO.: 40-00300 | DATE: 1/15/2013 |
|---|---|---|
| DRWN. BY: KG&CG | DSGN. BY: MJM | CHKD. BY: EM&JS | SHEET NO.: 316 |

DATE: 1/15/2013 8:45:10 AM
FILE: DRN_PP_A04.dgn

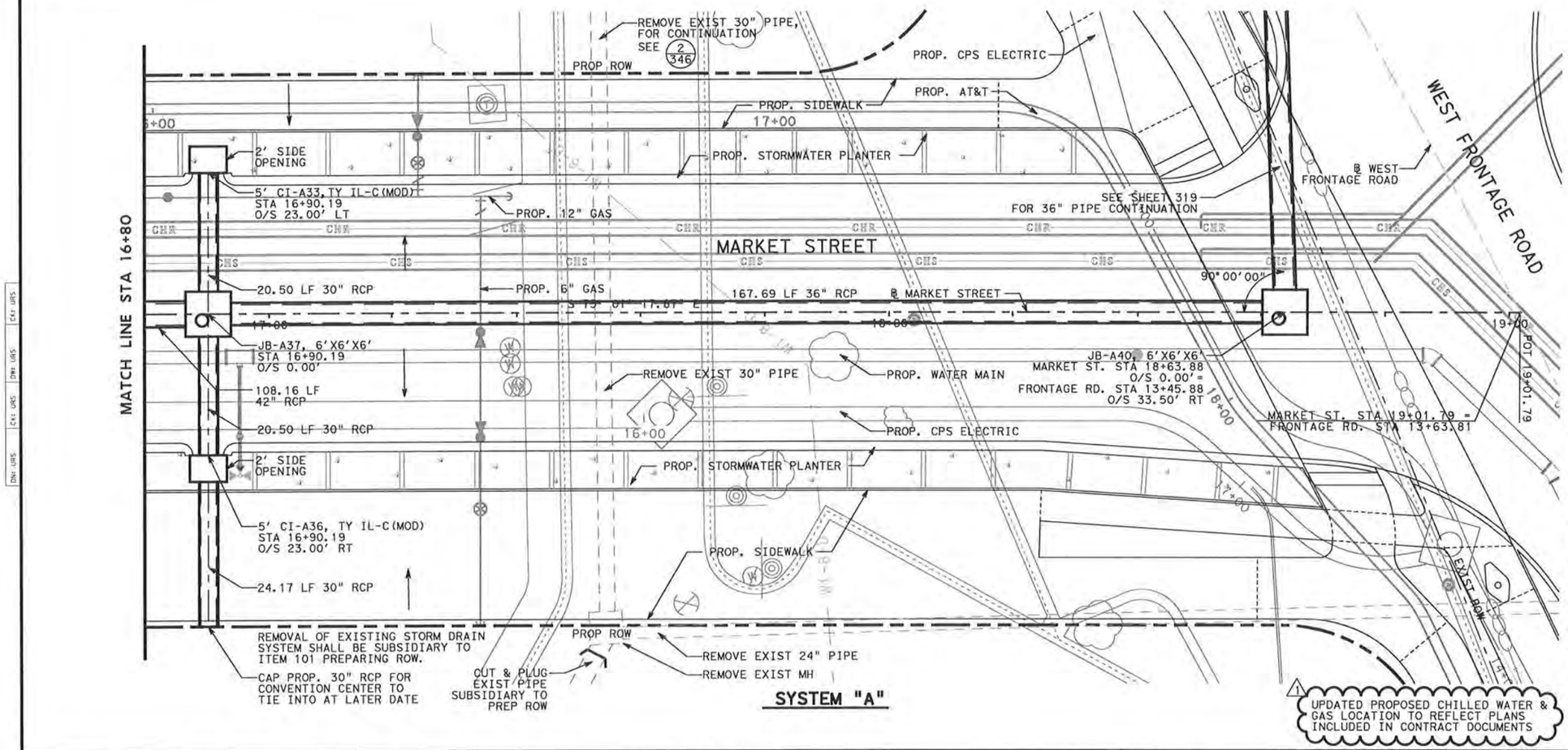


HORIZ. 0' 10' 20'
VERT. 0' 5' 10'
SCALE IN FEET

## PLAN VIEW LEGEND

| | |
|---|---|
| CI = CURB INLET | DI = DROP INLET |
| JB = JUNCTION BOX | TI = TRAFFIC INLET |
| MH = MANHOLE | |
| PROPOSED STRUCTURES | |
| EXIST EDGE OF ROADWAY/GUT | |
| PROPOSED RIGHT OF WAY | |
| EXIST RIGHT OF WAY | |
| PROPOSED CONCRETE CURB | |
| EXIST STORM SEWER | |
| EXIST GAS LINE | —GI-X-D— |
| EXIST SANITARY SEWER | —WWI-X-D— |
| EXIST WATER | —WX-X-D— |
| EXIST UNDGR TELEPHONE | —TX-X-D— |
| EXIST UNDGR ELECTRIC | —EI-I— |
| TIME WARNER CABLE | —CI-I— |
| EXIST STEAM LINES | —W4-X-D— |
| EXIST CHILLED WATER | —W3-X-D— |

FOR LOCATION OF UNDERGROUND ELECTRIC AND GAS FACILITIES, TELEPHONE CABLES, AND TIME WARNER CABLE TV CALL TEXAS STATE WIDE ONE CALL LOCATOR NUMBER 1-800-545-6005 48 HOURS PRIOR BEFORE BEGINNING ANY EXCAVATION.

DUE TO FEDERAL REGULATION TITLE 49, PART 192.181, C.P.S. MUST MAINTAIN ACCESS TO GAS VALVES AT ALL TIMES. THE CONTRACTOR MUST PROTECT AND WORK AROUND ANY GAS VALVES THAT ARE IN THE PROJECT AREA.

THE CONTRACTOR WILL BE RESPONSIBLE FOR PROTECTING C.P.S. OVERHEAD AND UNDERGROUND ELECTRIC FACILITIES IF ADJACENT TO WORK AREAS.

THE CONTRACTOR WILL HAVE RESPONSIBILITY TO PROTECT AND SUPPORT CABLE TV AND TELEPHONE COMPANY PLANT DURING CONSTRUCTION.

THE EXISTENCE AND LOCATION OF UTILITIES INDICATED ON THE PLAN ARE TAKEN FROM AVAILABLE RECORDS AND ARE NOT GUARANTEED TO BE ACCURATE.

CONTRACTOR AND/OR CONTRACTOR'S INDEPENDENTLY RETAINED EMPLOYEE OR STRUCTURAL DESIGN/GEOTECHNICAL/SAFETY EQUIPMENT CONSULTANT, IF ANY, SHALL REVIEW THESE PLANS AND ANY AVAILABLE GEOTECHNICAL INFORMATION AND THE ANTICIPATED INSTALLATION SITE(S) IN ORDER TO DEVELOP THE CONTRACTOR'S PLANS TO IMPLEMENT THE PROJECT DESCRIBED IN THE CONTRACT DOCUMENTS. THE CONTRACTOR'S PLANS SHALL PROVIDE FOR ADEQUATE TRENCH SAFETY SYSTEMS THAT COMPLY WITH, AS A MINIMUM, OSHA STANDARDS FOR TRENCH EXCAVATIONS. CONTRACTOR AND/OR CONTRACTOR'S INDEPENDENTLY RETAINED EMPLOYEE OR SAFETY CONSULTANT SHALL DEVELOP AND IMPLEMENT A TRENCH SAFETY PROGRAM IN ACCORDANCE WITH OSHA STANDARDS GOVERNING THE PRESENCE AND ACTIVITIES OF INDIVIDUALS WORKING IN AND AROUND TRENCH EXCAVATION.

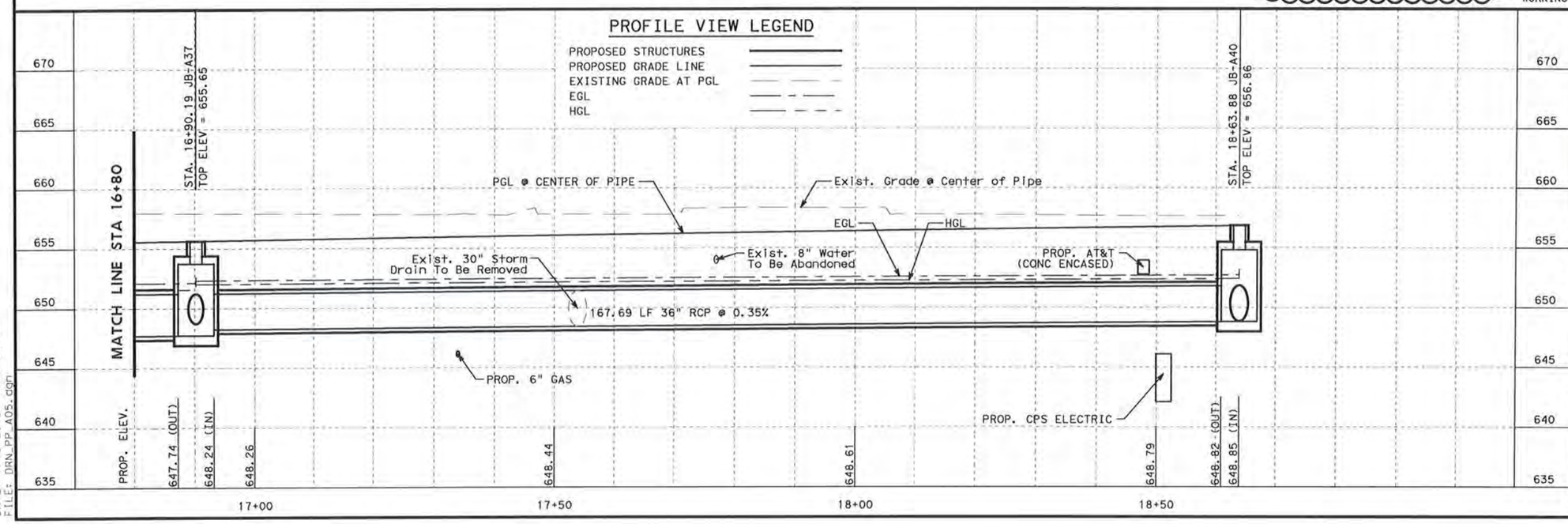


STATE OF TEXAS
ERNEST T. MAESTAS
52038
REGISTERED PROFESSIONAL ENGINEER
1-18-13

| NO | REVISION | DRAWN | APPROVED | DATE |
|---|---|---|---|---|
| | | | | / / |
| | | | | / / |
| 1 | ADDENDUM 2 | JPS | ETM | 1/18/13 |

URS 9901 IH10 WEST, SUITE 350 SAN ANTONIO, TEXAS 78230 TEL: 210.377.3764 FAX: 210.377.0622 (FIRM # 31621) WWW.URSCORP.COM

MAESTAS & ASSOCIATES INC TBPE REGISTRATION No.: F-333 11550 I.H. 10 WEST SUITE 320 SAN ANTONIO, TEXAS 78230 (210) 366-1998

CITY OF SAN ANTONIO
CAPITAL IMPROVEMENTS MANAGEMENT SERVICES DEPARTMENT

MARKET STREET REALIGNMENT
MARKET STREET
STORM SEWER SYSTEM "A"
PLAN & PROFILE
STA 16+80 TO END OF MARKET ST

SHEET 5 OF 7

| | | |
|---|---|---|
| 100% SUBMITTAL | PROJECT NO.: 40-00300 | DATE: 1/15/2013 |
| DRWN. BY: KG&CG | DSGN. BY: MJM CHKD. BY: EM&JS | SHEET NO.: 317 |

DATE: 1/15/2013 8:45:25 AM
FILE: DRN_PP_A05.dgn

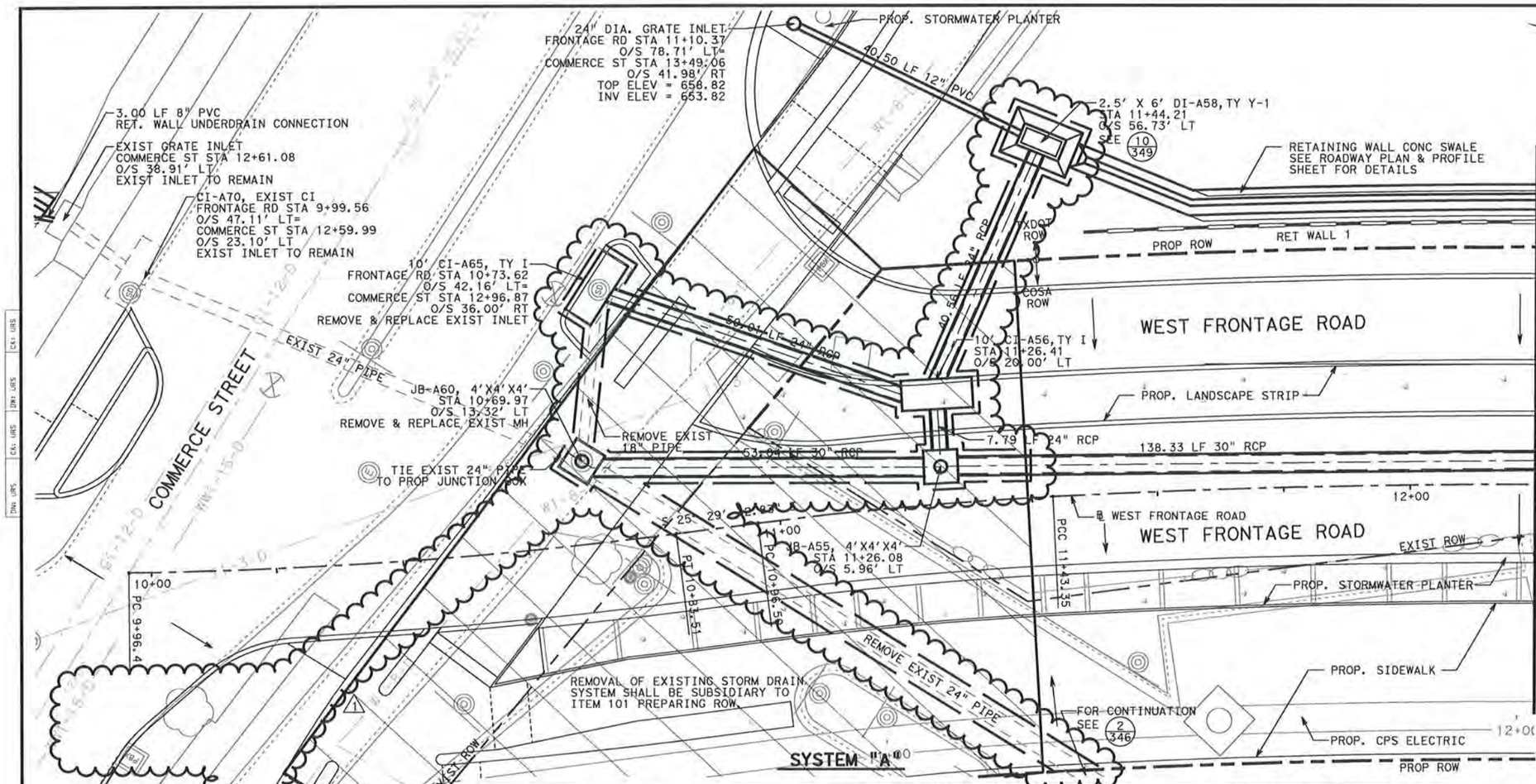


HORIZ. 0' 10' 20'
VERT. 0' 5' 10'
SCALE IN FEET

## PLAN VIEW LEGEND

| | |
|---|---|
| CI = CURB INLET | DI = DROP INLET |
| JB = JUNCTION BOX | TI = TRAFFIC INLET |
| MH = MANHOLE | |
| PROPOSED STRUCTURES | |
| EXIST EDGE OF ROADWAY/GUT | |
| PROPOSED RIGHT OF WAY | |
| EXIST RIGHT OF WAY | |
| PROPOSED CONCRETE CURB | |
| EXIST STORM SEWER | |
| EXIST GAS LINE | G1-X-D |
| EXIST SANITARY SEWER | WW1-X-D |
| EXIST WATER | WX-X-D |
| EXIST UNDGR TELEPHONE | TX-X-D |
| EXIST UNDGR ELECTRIC | E1-1 |
| TIME WARNER CABLE | C1-1 |
| EXIST STEAM LINES | W4-X-D |
| EXIST CHILLED WATER | W3-X-D |

FOR LOCATION OF UNDERGROUND ELECTRIC AND GAS FACILITIES, TELEPHONE CABLES, AND TIME WARNER CABLE TV CALL TEXAS STATE WIDE ONE CALL LOCATOR NUMBER 1-800-545-6005 48 HOURS PRIOR BEFORE BEGINNING ANY EXCAVATION.

DUE TO FEDERAL REGULATION TITLE 49, PART 192.181, C.P.S. MUST MAINTAIN ACCESS TO GAS VALVES AT ALL TIMES. THE CONTRACTOR MUST PROTECT AND WORK AROUND ANY GAS VALVES THAT ARE IN THE PROJECT AREA.

THE CONTRACTOR WILL BE RESPONSIBLE FOR PROTECTING C.P.S. OVERHEAD AND UNDERGROUND ELECTRIC FACILITIES IF ADJACENT TO WORK AREAS.

THE CONTRACTOR WILL HAVE RESPONSIBILITY TO PROTECT AND SUPPORT CABLE TV AND TELEPHONE COMPANY PLANT DURING CONSTRUCTION.

THE EXISTENCE AND LOCATION OF UTILITIES INDICATED ON THE PLAN ARE TAKEN FROM AVAILABLE RECORDS AND ARE NOT GUARANTEED TO BE ACCURATE.

CONTRACTOR AND/OR CONTRACTOR'S INDEPENDENTLY RETAINED EMPLOYEE OR STRUCTURAL DESIGN/GEOTECHNICAL/SAFETY EQUIPMENT CONSULTANT, IF ANY, SHALL REVIEW THESE PLANS AND ANY AVAILABLE GEOTECHNICAL INFORMATION AND THE ANTICIPATED INSTALLATION SITE(S) IN ORDER TO DEVELOP THE CONTRACTOR'S PLANS TO IMPLEMENT THE PROJECT DESCRIBED IN THE CONTRACT DOCUMENTS. THE CONTRACTOR'S PLANS SHALL PROVIDE FOR ADEQUATE TRENCH SAFETY SYSTEMS THAT COMPLY WITH, AS A MINIMUM, OSHA STANDARDS FOR TRENCH EXCAVATIONS. CONTRACTOR AND/OR CONTRACTOR'S INDEPENDENTLY RETAINED EMPLOYEE OR SAFETY CONSULTANT SHALL DEVELOP AND IMPLEMENT A TRENCH SAFETY PROGRAM IN ACCORDANCE WITH OSHA STANDARDS GOVERNING THE PRESENCE AND ACTIVITIES OF INDIVIDUALS WORKING IN AND AROUND TRENCH EXCAVATION.

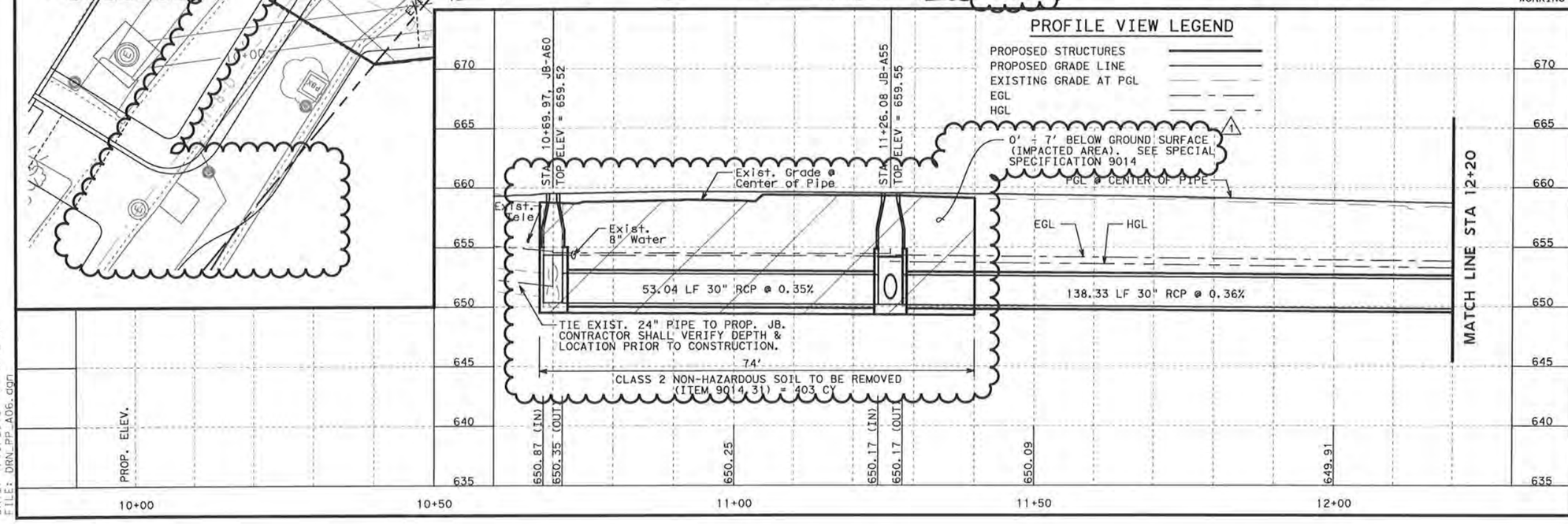


STATE OF TEXAS
ERNEST T. MAESTAS
52938
PROFESSIONAL ENGINEER
REGISTERED
1-18-13

| NO | REVISION | DRAWN | APPROVED | DATE |
|---|---|---|---|---|
| | | | | / / |
| | | | | / / |
| 1 | ADDENDUM 2 - ADDED SS 9014 REQUIREMENTS | JPS | ETM | 1/18/13 |

URS 9901 IH10 WEST, SUITE 350 SAN ANTONIO, TEXAS 78230 (FIRM # 31621)
TEL: 210.377.3764 FAX: 210.377.0622 WWW.URSCORP.COM

MAESTAS & ASSOCIATES INC (1550 LH. 10 WEST SUITE 320 SAN ANTONIO, TEXAS 78230 (210) 366-1988)
TBPE REGISTRATION No.: F-333

CITY OF SAN ANTONIO
CAPITAL IMPROVEMENTS MANAGEMENT SERVICES DEPARTMENT

MARKET STREET REALIGNMENT
WEST FRONTAGE ROAD
# STORM SEWER SYSTEM "A" PLAN & PROFILE
BEGIN TO STA 12+20

SHEET 6 OF 7

| | | | |
|---|---|---|---|
| 100% SUBMITTAL | PROJECT NO.: 40-00300 | | DATE: 1/15/2013 |
| DRWN. BY: KD&CO | DSGN. BY: MJM | CHKD. BY: EM&JS | SHEET NO.: 318 |

DATE: 1/15/2013 8:45:42 AM
FILE: DRN_PP_A06.dgn

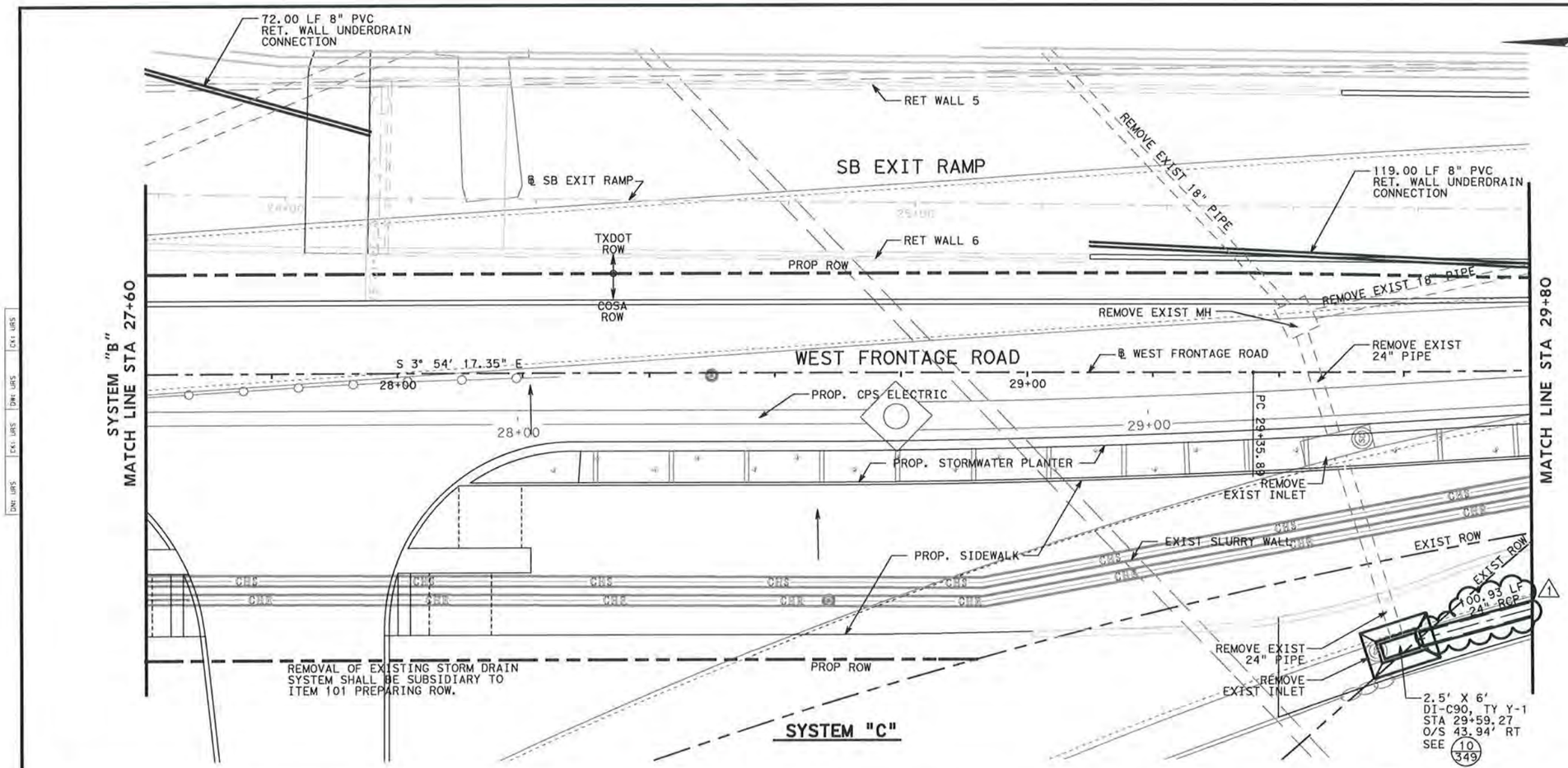


HORIZ. 0' 10' 20'
VERT. 0' 5' 10'
SCALE IN FEET

## PLAN VIEW LEGEND

CI = CURB INLET DI = DROP INLET
JB = JUNCTION BOX TI = TRAFFIC INLET
MH = MANHOLE
PROPOSED STRUCTURES
EXIST EDGE OF ROADWAY/GUT
PROPOSED RIGHT OF WAY
EXIST RIGHT OF WAY
PROPOSED CONCRETE CURB
EXIST STORM SEWER
EXIST GAS LINE —GI-X-D—
EXIST SANITARY SEWER —WWI-X-D—
EXIST WATER —WX-X-D—
EXIST UNDGR TELEPHONE —TX-X-D—
EXIST UNDGR ELECTRIC —EI-1—
TIME WARNER CABLE —CI-1—
EXIST STEAM LINES —W4-X-D—
EXIST CHILLED WATER —W3-X-D—

FOR LOCATION OF UNDERGROUND ELECTRIC AND GAS FACILITIES, TELEPHONE CABLES, AND TIME WARNER CABLE TV CALL TEXAS STATE WIDE ONE CALL LOCATOR NUMBER 1-800-545-6005 48 HOURS PRIOR BEFORE BEGINNING ANY EXCAVATION.

DUE TO FEDERAL REGULATION TITLE 49, PART 192.181, C.P.S. MUST MAINTAIN ACCESS TO GAS VALVES AT ALL TIMES. THE CONTRACTOR MUST PROTECT AND WORK AROUND ANY GAS VALVES THAT ARE IN THE PROJECT AREA.

THE CONTRACTOR WILL BE RESPONSIBLE FOR PROTECTING C.P.S. OVERHEAD AND UNDERGROUND ELECTRIC FACILITIES IF ADJACENT TO WORK AREAS.

THE CONTRACTOR WILL HAVE RESPONSIBILITY TO PROTECT AND SUPPORT CABLE TV AND TELEPHONE COMPANY PLANT DURING CONSTRUCTION.

THE EXISTENCE AND LOCATION OF UTILITIES INDICATED ON THE PLAN ARE TAKEN FROM AVAILABLE RECORDS AND ARE NOT GUARANTEED TO BE ACCURATE.

CONTRACTOR AND/OR CONTRACTOR'S INDEPENDENTLY RETAINED EMPLOYEE OR STRUCTURAL DESIGN/GEOTECHNICAL/SAFETY EQUIPMENT CONSULTANT, IF ANY, SHALL REVIEW THESE PLANS AND ANY AVAILABLE GEOTECHNICAL INFORMATION AND THE ANTICIPATED INSTALLATION SITE(S) IN ORDER TO DEVELOP THE CONTRACTOR'S PLANS TO IMPLEMENT THE PROJECT DESCRIBED IN THE CONTRACT DOCUMENTS. THE CONTRACTOR'S PLANS SHALL PROVIDE FOR ADEQUATE TRENCH SAFETY SYSTEMS THAT COMPLY WITH, AS A MINIMUM, OSHA STANDARDS FOR TRENCH EXCAVATIONS. CONTRACTOR AND/OR CONTRACTOR'S INDEPENDENTLY RETAINED EMPLOYEE OR SAFETY CONSULTANT SHALL DEVELOP AND IMPLEMENT A TRENCH SAFETY PROGRAM IN ACCORDANCE WITH OSHA STANDARDS GOVERNING THE PRESENCE AND ACTIVITIES OF INDIVIDUALS WORKING IN AND AROUND TRENCH EXCAVATION.

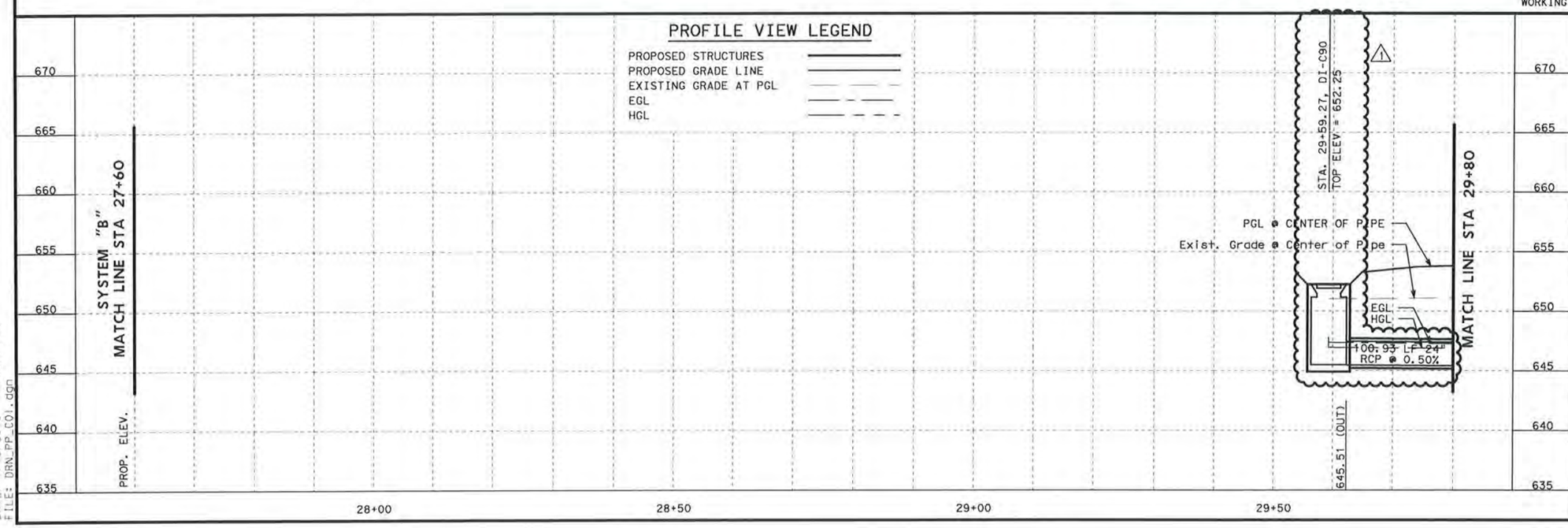


STATE OF TEXAS
JASON P. SCHEPPERS
80675
REGISTERED
PROFESSIONAL ENGINEER
1/18/13

| NO | REVISION | DRAWN | APPROVED | DATE |
|---|---|---|---|---|
| | | | | / / |
| | | | | / / |
| 1 | ADDENDUM 2 | JPS | ETM | 1/18/13 |

URS 9901 IH10 WEST, SUITE 350 SAN ANTONIO, TEXAS 78230 (FIRM # 3162)
TEL: 210.377.3764 FAX: 210.377.0622 WWW.URSCORP.COM

MAESTAS & ASSOCIATES INC. TBPE REGISTRATION No.: F-333 11550 I.H. 10 WEST SUITE 320 SAN ANTONIO, TEXAS 78230 (210) 366-1988

CITY OF SAN ANTONIO
CAPITAL IMPROVEMENTS MANAGEMENT SERVICES DEPARTMENT

MARKET STREET REALIGNMENT
WEST FRONTAGE ROAD
# STORM SEWER SYSTEM "C" PLAN & PROFILE
STA 27+60 TO STA 29+80

SHEET 1 OF 3

| 100% SUBMITTAL | PROJECT NO.: 40-00300 | DATE: 1/15/2013 |
|---|---|---|
| DRWN. BY: KG&CO | DSGN. BY: MJM | CHKD. BY: EM&JS | SHEET NO.: 335 |

DATE: 1/15/2013 10:05:52 AM
FILE: DRN_PP_C01.dgn

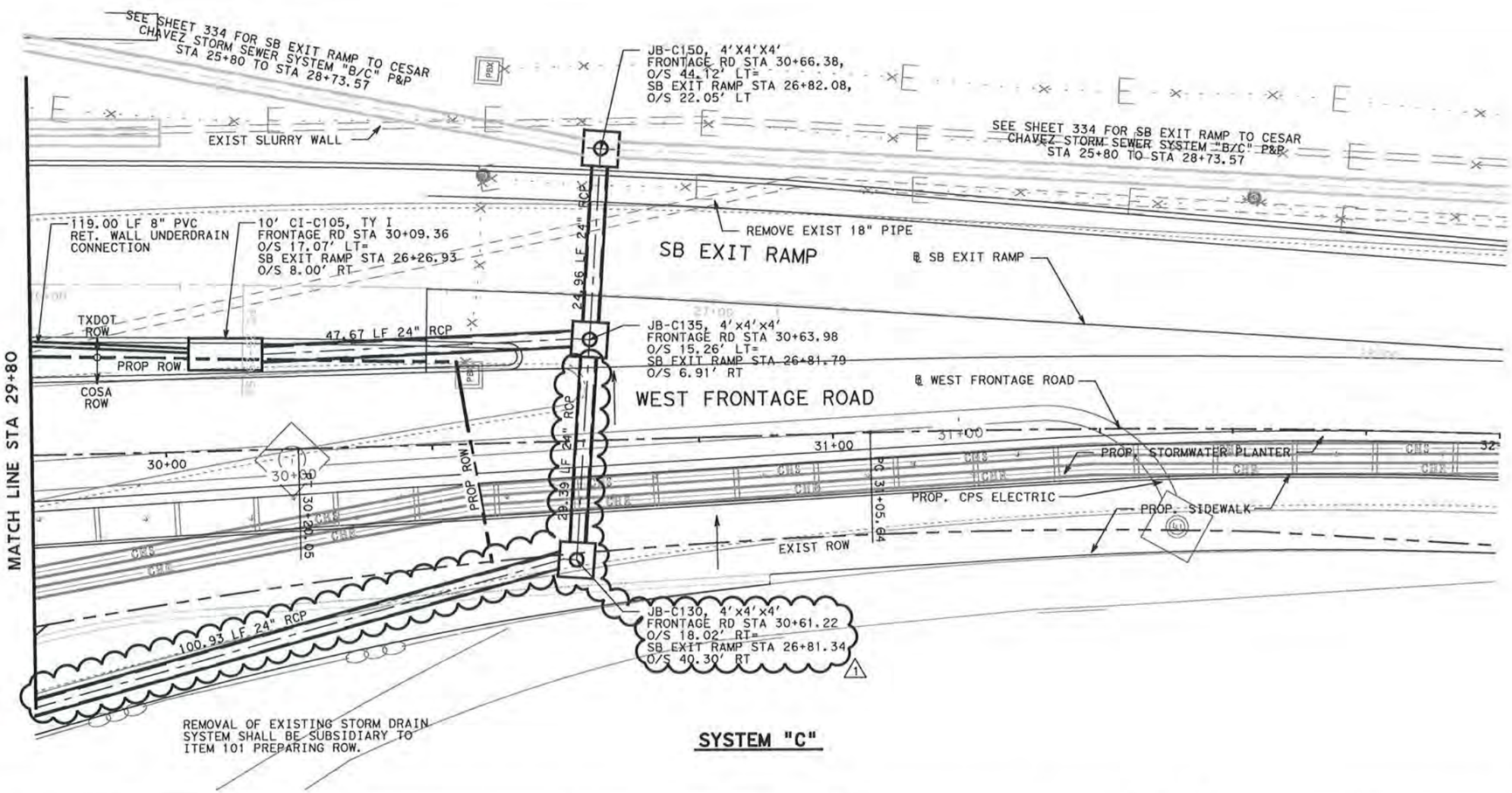


## SYSTEM "C"

HORIZ. 0' 10' 20'
VERT. 0' 5' 10'
SCALE IN FEET

## PLAN VIEW LEGEND

| | |
|---|---|
| CI = CURB INLET | DI = DROP INLET |
| JB = JUNCTION BOX | TI = TRAFFIC INLET |
| MH = MANHOLE | |
| PROPOSED STRUCTURES | |
| EXIST EDGE OF ROADWAY/GUT | |
| PROPOSED RIGHT OF WAY | |
| EXIST RIGHT OF WAY | |
| PROPOSED CONCRETE CURB | |
| EXIST STORM SEWER | |
| EXIST GAS LINE | —G1-X-D— |
| EXIST SANITARY SEWER | —WW1-X-D— |
| EXIST WATER | —WX-X-D— |
| EXIST UNDGR TELEPHONE | —TX-X-D— |
| EXIST UNDGR ELECTRIC | —E1-1— |
| TIME WARNER CABLE | —C1-1— |
| EXIST STEAM LINES | —W4-X-D— |
| EXIST CHILLED WATER | —W3-X-D— |

FOR LOCATION OF UNDERGROUND ELECTRIC AND GAS FACILITIES, TELEPHONE CABLES, AND TIME WARNER CABLE TV CALL TEXAS STATE WIDE ONE CALL LOCATOR NUMBER 1-800-545-6005 48 HOURS PRIOR BEFORE BEGINNING ANY EXCAVATION.

DUE TO FEDERAL REGULATION TITLE 49, PART 192.181, C.P.S. MUST MAINTAIN ACCESS TO GAS VALVES AT ALL TIMES. THE CONTRACTOR MUST PROTECT AND WORK AROUND ANY GAS VALVES THAT ARE IN THE PROJECT AREA.

THE CONTRACTOR WILL BE RESPONSIBLE FOR PROTECTING C.P.S. OVERHEAD AND UNDERGROUND ELECTRIC FACILITIES IF ADJACENT TO WORK AREAS.

THE CONTRACTOR WILL HAVE RESPONSIBILITY TO PROTECT AND SUPPORT CABLE TV AND TELEPHONE COMPANY PLANT DURING CONSTRUCTION.

THE EXISTENCE AND LOCATION OF UTILITIES INDICATED ON THE PLAN ARE TAKEN FROM AVAILABLE RECORDS AND ARE NOT GUARANTEED TO BE ACCURATE.

CONTRACTOR AND/OR CONTRACTOR'S INDEPENDENTLY RETAINED EMPLOYEE OR STRUCTURAL DESIGN/GEOTECHNICAL/SAFETY EQUIPMENT CONSULTANT, IF ANY, SHALL REVIEW THESE PLANS AND ANY AVAILABLE GEOTECHNICAL INFORMATION AND THE ANTICIPATED INSTALLATION SITE(S) IN ORDER TO DEVELOP THE CONTRACTOR'S PLANS TO IMPLEMENT THE PROJECT DESCRIBED IN THE CONTRACT DOCUMENTS. THE CONTRACTOR'S PLANS SHALL PROVIDE FOR ADEQUATE TRENCH SAFETY SYSTEMS THAT COMPLY WITH, AS A MINIMUM, OSHA STANDARDS FOR TRENCH EXCAVATIONS. CONTRACTOR AND/OR CONTRACTOR'S INDEPENDENTLY RETAINED EMPLOYEE OR SAFETY CONSULTANT SHALL DEVELOP AND IMPLEMENT A TRENCH SAFETY PROGRAM IN ACCORDANCE WITH OSHA STANDARDS GOVERNING THE PRESENCE AND ACTIVITIES OF INDIVIDUALS WORKING IN AND AROUND TRENCH EXCAVATION.

## PROFILE VIEW LEGEND

| | |
|---|---|
| PROPOSED STRUCTURES | |
| PROPOSED GRADE LINE | |
| EXISTING GRADE AT PGL | |
| EGL | |
| HGL | |

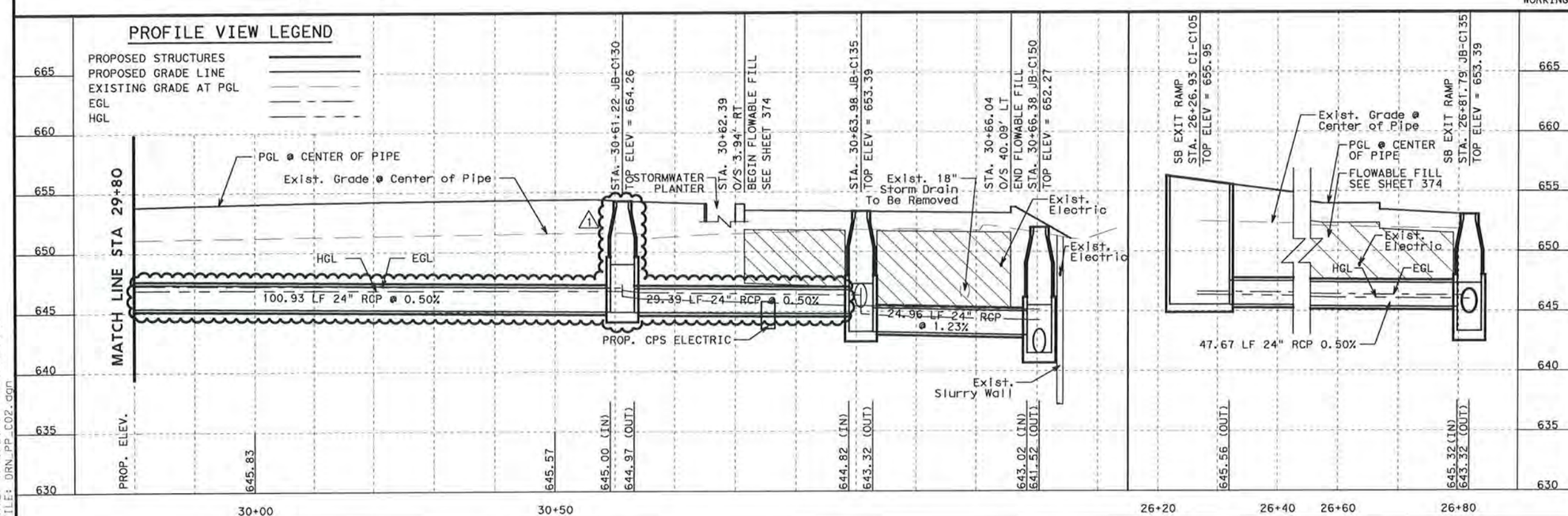


STATE OF TEXAS
JASON P. SCHEPPERS
80675
REGISTERED PROFESSIONAL ENGINEER
1/18/13

| NO | REVISION | DRAWN | APPROVED | DATE |
|---|---|---|---|---|
| 1 | ADDENDUM 2 | JPS | ETM | 1/18/13 |

URS 9901 IH10 WEST, SUITE 350 SAN ANTONIO, TEXAS 78230 TEL: 210.377.3764 FAX: 210.377.0622 (FIRM # 3162) WWW.URSCORP.COM

MAESTAS & ASSOCIATES INC. TBPE REGISTRATION No.: F-333 11550 I.H. 10 WEST SUITE 320 SAN ANTONIO, TEXAS 78230 (210) 366-1988

CITY OF SAN ANTONIO
CAPITAL IMPROVEMENTS MANAGEMENT SERVICES DEPARTMENT

MARKET STREET REALIGNMENT
WEST FRONTAGE ROAD
STORM SEWER SYSTEM "C"
PLAN & PROFILE
STA 29+80 TO STA 32+00

SHEET 2 OF 3

| 100% SUBMITTAL | PROJECT NO.: 40-00300 | DATE: 1/15/2013 |
|---|---|---|
| DRWN. BY: LF&CG | DSGN. BY: MJM | CHKD. BY: EM&JS | SHEET NO.: 336 |

DATE: 1/15/2013 10:15:54 AM
FILE: DRN_PP_C02.dgn

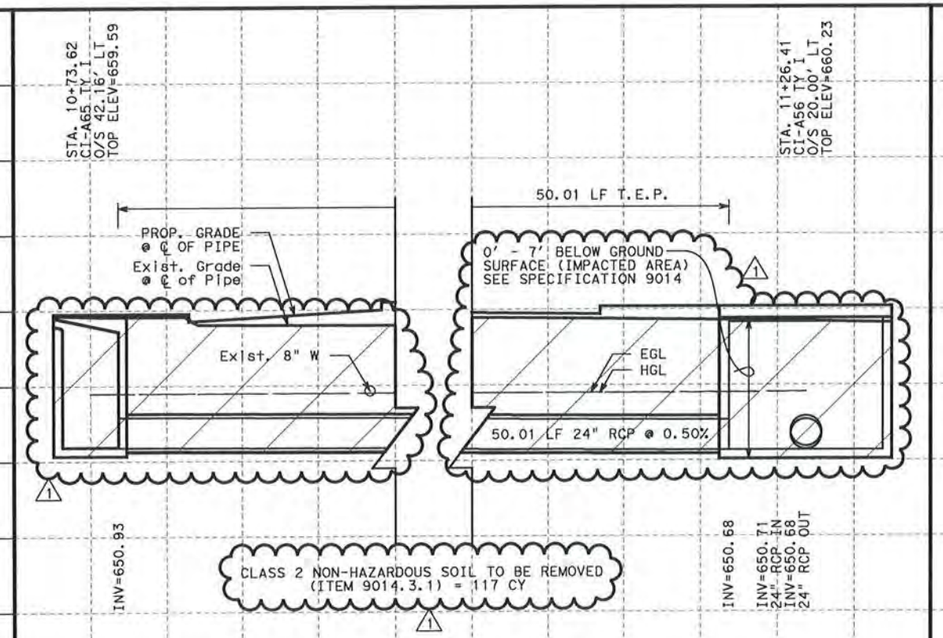


STA. 11+26.41 (WEST FRONTAGE ROAD)

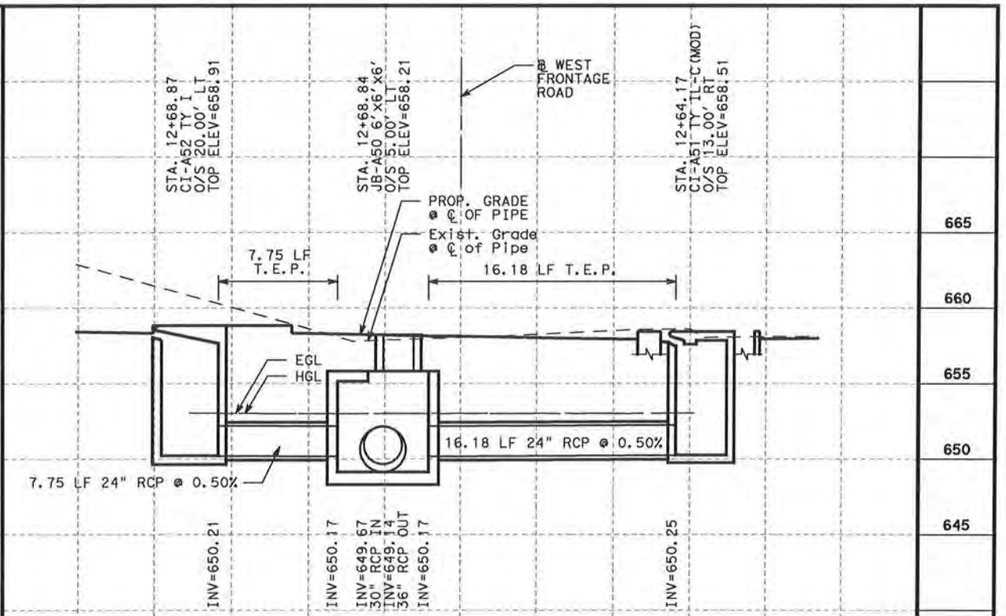


STA. 12+68.84 (WEST FRONTAGE ROAD)

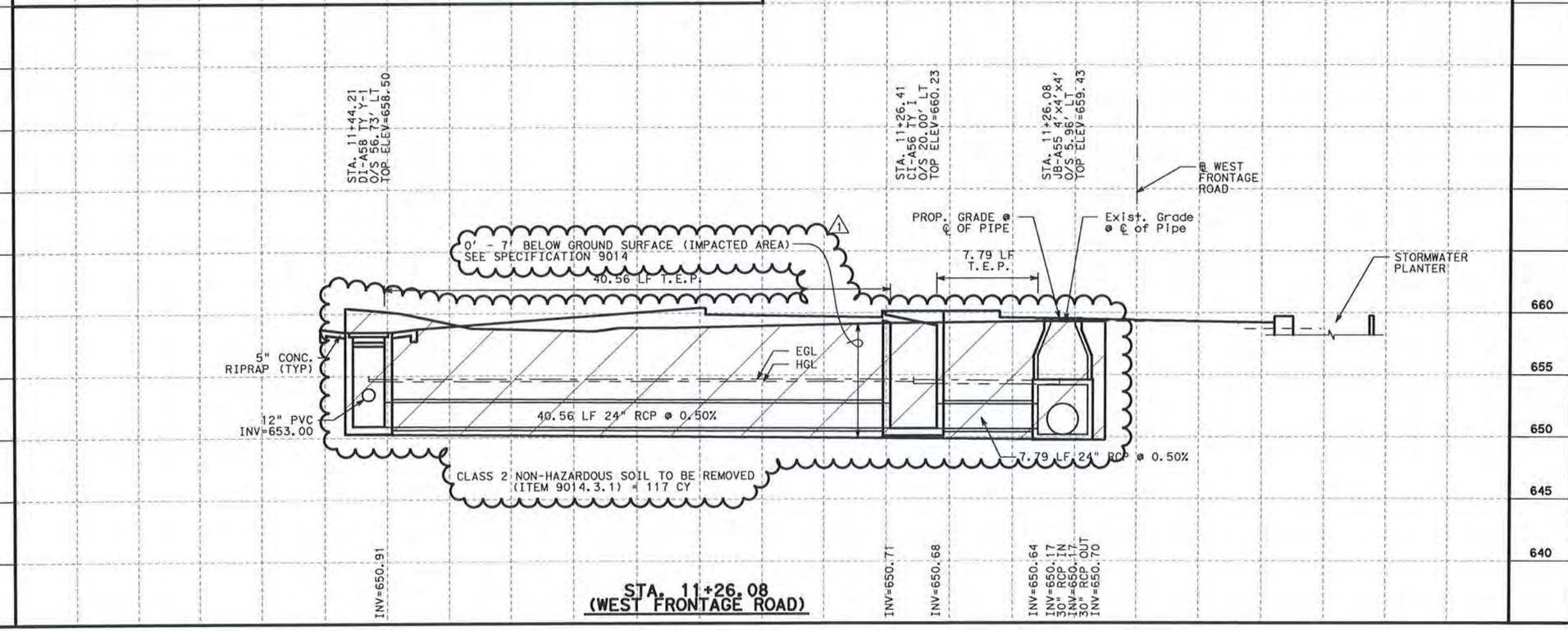


STA. 11+26.08 (WEST FRONTAGE ROAD)

HORIZ. 0' 5' 10'
VERT. 0' 5' 10'
SCALE IN FEET

## PROFILE VIEW LEGEND

G = GAS
W = WATER
T = TELEPHONE
E = ELECTRIC
SS = SANITARY SEWER
CW = CHILLED WATER
RW = RECYCLED WATER
CI = CURB INLET
JB = JUNCTION BOX
DI = DROP INLET
TI = TRAFFIC INLET

STATE OF TEXAS
ERNEST T. MAESTAS
52938
REGISTERED PROFESSIONAL ENGINEER

1-18-13

| NO | REVISION | DRAWN | APPROVED | DATE |
|---|---|---|---|---|
| 1 | ADDENDUM 2 - ADDED SS 9014 REQUIREMENTS | JPS | ETM | 1/18/13 |

URS 9901 IH10 WEST, SUITE 350 SAN ANTONIO, TEXAS 78230 TEL: 210.377.3764 FAX: 210.377.0622 (FIRM # 3162) WWW.URSCORP.COM

MAESTAS & ASSOCIATES INC. TBPE REGISTRATION No.: F-333 11550 I.H. 10 WEST SUITE 320 SAN ANTONIO, TEXAS 78230 (210) 366-1988

CITY OF SAN ANTONIO
CAPITAL IMPROVEMENTS MANAGEMENT SERVICES DEPARTMENT

MARKET STREET REALIGNMENT
WEST FRONTAGE ROAD
STORM SEWER SYSTEM "A"
INLET CROSS SECTIONS

SHEET 3 OF 3

| | | |
|---|---|---|
| 100% SUBMITTAL | PROJECT NO.: 40-00300 | DATE: 1/15/2013 |
| DRWN. BY: KG&LF | DSGN. BY: MJM / CHKD. BY: EM&JS | SHEET NO.: 340 |

DATE: 1/15/2013 8:46:30 AM
FILE: DRN_XS_A03.dgn

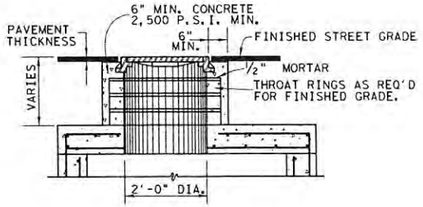


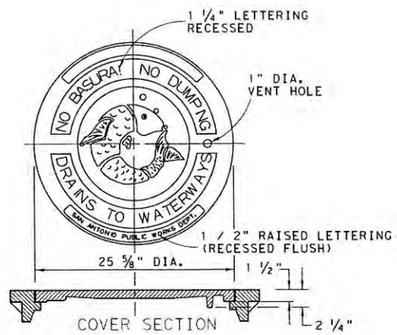


## MANHOLE LID & RING DETAIL

**NOTES FOR MANHOLE LID AND RING**

1. FOR LID DESIGN OUTSIDE OF CITY OF SAN ANTONIO, DELETE "SAN ANTONIO PUBLIC WORKS DEPT.".
2. CASTING NUMBER AND MANUFACTURER'S I.D. ON LID AND RING.
3. LOAD BEARING CAPABILITY OF HS-20 MINIMUM.
4. THE LOAD BEARING SURFACES SHALL BE MACHINE GROUND.
5. THE COMBINED WEIGHT OF THE MANHOLE RING AND COVER MUST BE AT LEAST 260 LBS.

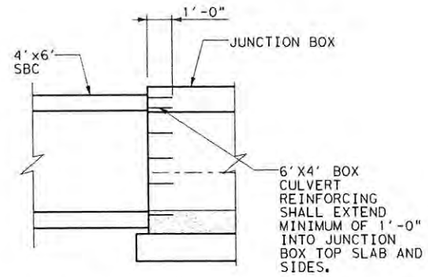


## 4'X6' SBC TO J-BOX CONNECTION

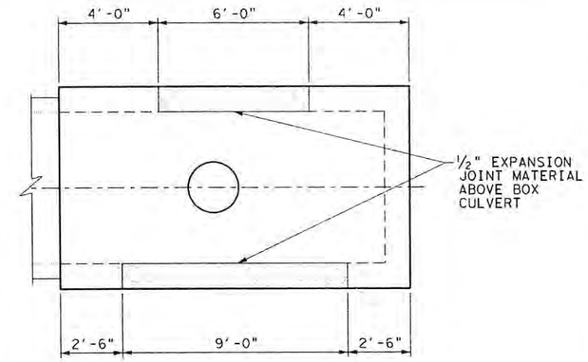


## PLAN

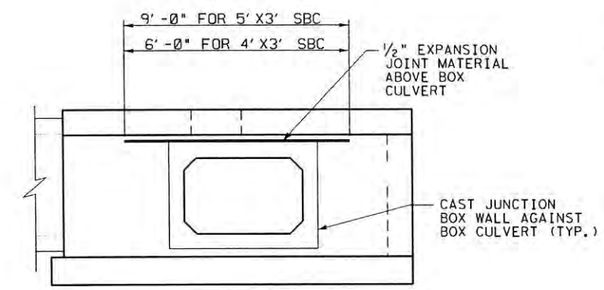


## ELEVATION

## 5'X3' AND 4'X3' SBC TO JUNCTION BOX CONNECTION

## TABLE OF ESTIMATED QUANTITIES

| BARS | NO. | SIZE | LENGTH | SPA | WEIGHT |
|---|---|---|---|---|---|
| A | 34 | #5 | 14'-2" | 6" | 502 △1 |
| B △1 | 118 | #5 | 7'-8" | 6" | 944 |
| C | 34 | #5 | 5'-8" | 6" | 201 |
| D | 20 | #5 | 7'-8" | 6" | 160 |
| E | 34 | #5 | 13'-8" | 6" | 485 △1 |
| L1 | 80 | #6 | 5'-0" | 6" | 601 |
| L2 | 55 | #6 | 7'-9" | 6" | 640 |
| ** R | 32 | #5 | 4'-0" | - | 134 |
| S1 | 20 | #4 | 6'-6" | 6" | 87 △1 |
| S2 | 10 | #4 | 8'-10" | 6" | 59 |
| S3 | 10 | #4 | 9'-1" △1 | 6" | 61 |
| * REINFORCING STEEL | | | | LB | 3,873 △1 |
| * CLASS "F" CONCRETE | | | | CY | 13.5 |

* FOR CONTRACTORS INFORMATION ONLY, DOES NOT INCLUDE CONCRETE FILL OR MANHOLE AND RISER.

** PLACE BARS R AT MANHOLE OPENING AND 30" D.I. PIPE PENETRATION.

FIELD CUT OR BEND BARS TO AVOID OPENINGS, PROVIDE 2" MIN CLR.

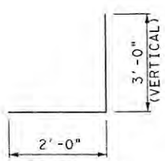


BARS L1

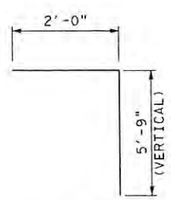


BARS L2

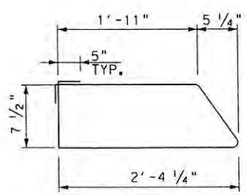


BARS S1

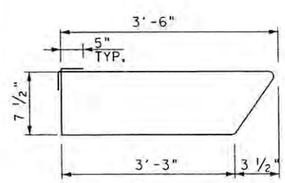


BARS S2

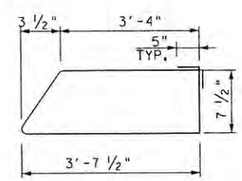


BARS S3

STATE OF TEXAS
WILLIAM M. GLEESON
98198
LICENSED
PROFESSIONAL ENGINEER

1-18-13

| NO | REVISION | DRAWN | APPROVED | DATE |
|---|---|---|---|---|
| 1 | REVISED TABLE OF EST. QUANT. | SZT | WMG | 1/18/13 |
| | | | | / / |

URS 9901 IH10 WEST, SUITE 350 SAN ANTONIO, TEXAS 78230 (FIRM # 3162)
TEL: 210.377.3764 FAX: 210.377.0622 WWW.URSCORP.COM

CITY OF SAN ANTONIO
CAPITAL IMPROVEMENTS MANAGEMENT SERVICES DEPARTMENT

MARKET STREET REALIGNMENT

JUNCTION BOX - NODE B120

MONTANA ST STA 16+16.98
O/S 0.00' =
WEST FRONTAGE RD STA 22+19.27
O/S 37.38' RT

SHEET 2 OF 2

| | | | |
|---|---|---|---|
| 100% SUBMITTAL | PROJECT NO.: 40-00300 | | DATE: 1/15/2013 |
| DRWN. BY: AGS | DSGN. BY: WMG | CHKD. BY: DBR | SHEET NO.: 353 |

DATE: 1/15/2013 2:58:07 PM
FILE: JUNCTION BOX 2.dgn

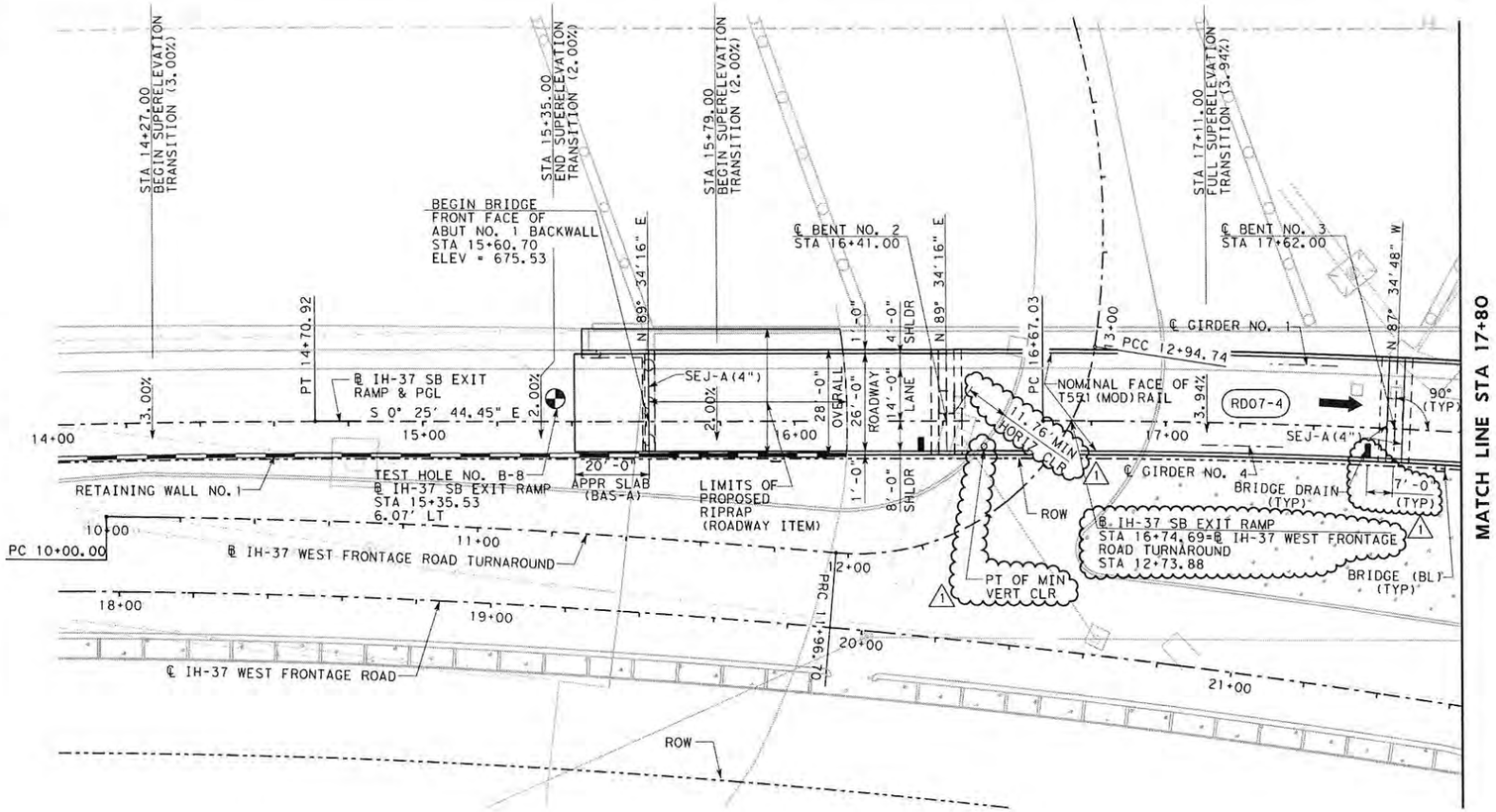


## PLAN

## HORIZONTAL CURVE DATA

℄ IH-37 SOUTHBOUND EXIT RAMP

RD07-4

PI STA 18+61.60
N 13,702,566.9862
E 2,134,176.3394
D = 2°59'59"
R = 1,910.00'
L = 387.80'
T = 194.57'
Δ = 11°37'59" (RT)

## LEGEND

BORING LOCATION

PROPOSED RETAINING WALL

## GENERAL NOTES

1. BRIDGE DESIGNED ACCORDING TO AASHTO 2012 LRFD BRIDGE SPECIFICATIONS.
2. D DENOTES BENTS WITH DOWEL BARS "D" AND SLOTTED HOLES AT ENDS OF EXTERIOR BEAMS ONLY.
3. HORIZONTAL DIMENSIONS ARE SHOWN. LENGTHS MUST BE CORRECTED FOR GRADE OR CROSS-SLOPE WHERE APPROPRIATE.
4. DESIGN DEAD LOAD INCLUDES 25 psf FOR FUTURE OVERLAY.
5. THE "H" VALUES SHOWN ARE ESTIMATED COLUMN HEIGHTS. THE CONTRACTOR IS RESPONSIBLE FOR CALCULATING THE ACTUAL COLUMN HEIGHTS BASED ON FIELD CONDITIONS.
6. IH-37 SOUTHBOUND EXIT RAMP

   FUNCTIONAL CLASS OF ROADWAY = FREEWAY
   DESIGN SPEED = 45 MPH
   DHV(2020) = 690
7. REFER TO RETAINING WALL PLANS FOR WALL DETAILS.
8. NEW NBI NO. = 15-015-0-0073-08-354
   OLD NBI NO. = 15-015-0-0073-08-263 (TO BE REMOVED)
9. FOR REMOVAL OF EXISTING EXIT RAMP BRIDGE AND RIPRAP, SEE REMOVAL LAYOUT SHEETS.
10. SEE WEST FRONTAGE ROAD ILLUMINATION LAYOUT SHEETS FOR ILLUMINATION LOCATION, PAYMENT AND TxDOT BRIDGE LIGHTING (BL) STANDARD FOR MOUNTING DETAILS.
11. SAW-CUT GROOVING OF THE BRIDGE DECK AND APPROACH SLAB IS REQUIRED.
12. SUPERELEVATION TRANSITION TYPE: LINEAR

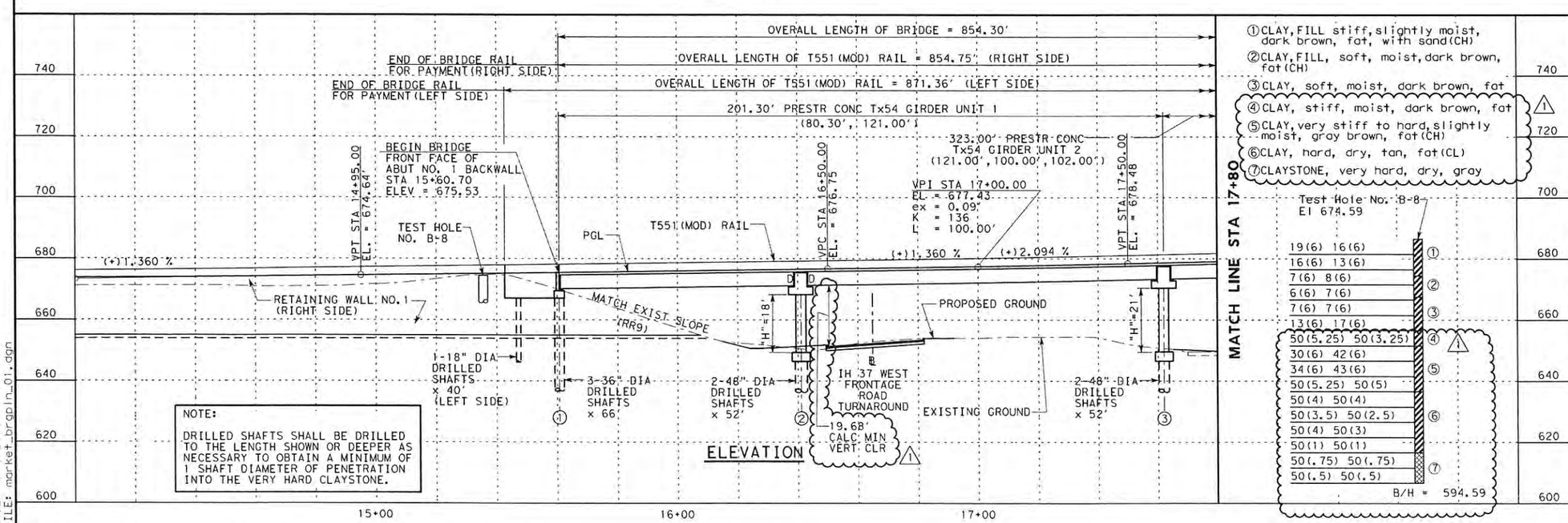


NOTE:

DRILLED SHAFTS SHALL BE DRILLED TO THE LENGTH SHOWN OR DEEPER AS NECESSARY TO OBTAIN A MINIMUM OF 1 SHAFT DIAMETER OF PENETRATION INTO THE VERY HARD CLAYSTONE.

## ELEVATION

STATE OF TEXAS
NABILA M. BOUTROS
90774
LICENSED PROFESSIONAL ENGINEER
1/18/13

0 20 40
SCALE: 1"=40' H
1"=40' V

HL93 LOADING

| NO | REVISION | DRAWN | APPROVED | DATE |
|---|---|---|---|---|
| 1 | ADDENDUM NO. 2 | SZT | NMB | 1/18/13 |
| | | | | / / |
| | | | | / / |

URS 9901 IH10 WEST, SUITE 350 SAN ANTONIO, TEXAS 78230 (FIRM # 3162)
TEL: 210.377.3764 FAX: 210.377.0622 WWW.URSCORP.COM

SEA STRUCTURAL ENGINEERING ASSOCIATES, INC. CONSULTING ENGINEERS SAN ANTONIO, TEXAS TBPE REG. NO. F-199

CITY OF SAN ANTONIO
CAPITAL IMPROVEMENTS MANAGEMENT SERVICES DEPARTMENT

MARKET STREET REALIGNMENT
IH-37 SOUTHBOUND EXIT RAMP

# BRIDGE LAYOUT

SHEET 1 OF 3

| 100% SUBMITTAL | PROJECT NO.: 40-00300 | | DATE: 1/16/2013 |
|---|---|---|---|
| DRWN. BY: SZT | DSGN. BY: NMB | CHKD. BY: DMM | SHEET NO.: 441 |

DATE: 1/16/2013 4:23:12 PM
FILE: market_bridgeIn_01.dgn

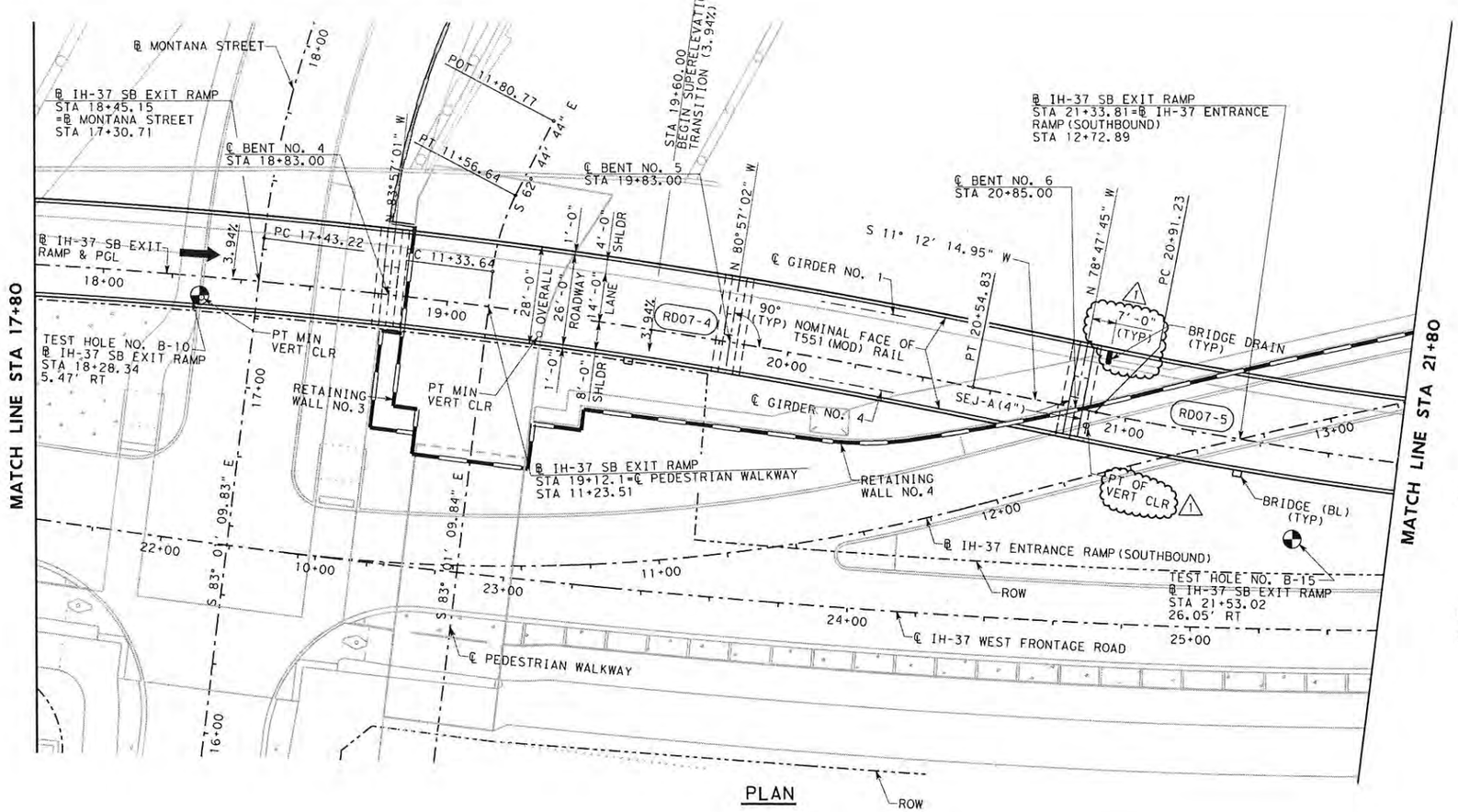


## PLAN

## HORIZONTAL CURVE DATA

℄ IH-37 SOUTHBOUND EXIT RAMP

| RD07-4 | RD07-5 |
|---|---|
| PI STA 18+61.60 | PI STA 22+52.96 |
| N 13,702,566.9862 | N 13,702,181.7660 |
| E 2,134,176.3394 | E 2,134,100.0348 |
| D = 2° 59' 59" | D = 4° 29' 38" |
| R = 1,910.00' | R = 1,275.00' |
| L = 387.80' | L = 321.74' |
| T = 194.57' | T = 161.73' |
| Δ = 11° 37' 59" (RT) | Δ = 14° 27' 30" (LT) |

## LEGEND

BORING LOCATION

PROPOSED RETAINING WALL

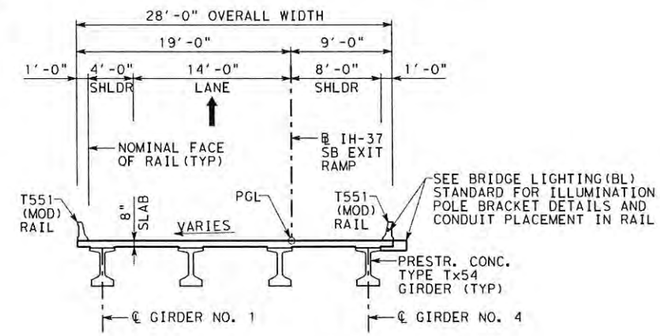


## TYPICAL SECTION

(LOOKING FORWARD STATION)

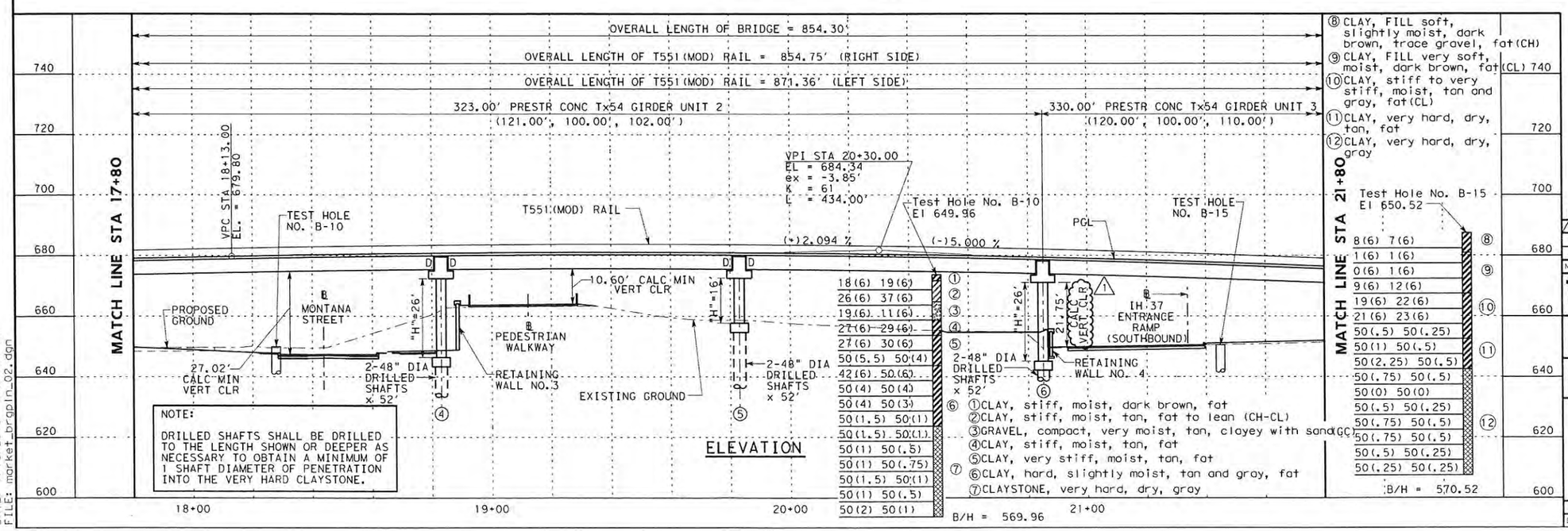


| | | | |
|---|---|---|---|
| 18(6) | 19(6) | ① | |
| 26(6) | 37(6) | ② | |
| 19(6) | 11(6) | ③ | |
| 27(6) | 29(6) | ④ | |
| 27(6) | 30(6) | ⑤ | |
| 50(5.5) | 50(4) | | |
| 42(6) | 50(6) | | |
| 50(4) | 50(4) | | |
| 50(4) | 50(3) | | |
| 50(1.5) | 50(1) | | |
| 50(1.5) | 50(1) | | |
| 50(1) | 50(.5) | | |
| 50(1) | 50(.75) | | |
| 50(1.5) | 50(1) | | |
| 50(1) | 50(.5) | | |
| 50(2) | 50(1) | ⑦ | |

| | | |
|---|---|---|
| 8(6) | 7(6) | ⑧ |
| 1(6) | 1(6) | |
| 0(6) | 1(6) | ⑨ |
| 9(6) | 12(6) | |
| 19(6) | 22(6) | ⑩ |
| 21(6) | 23(6) | |
| 50(.5) | 50(.25) | |
| 50(1) | 50(.5) | ⑪ |
| 50(2.25) | 50(.5) | |
| 50(.75) | 50(.5) | |
| 50(0) | 50(0) | |
| 50(.5) | 50(.25) | |
| 50(.75) | 50(.5) | ⑫ |
| 50(.75) | 50(.5) | |
| 50(.5) | 50(.25) | |
| 50(.25) | 50(.25) | |

⑥ ①CLAY, stiff, moist, dark brown, fat
②CLAY, stiff, moist, tan, fat to lean (CH-CL)
③GRAVEL, compact, very moist, tan, clayey with sand (GC)
④CLAY, stiff, moist, tan, fat
⑤CLAY, very stiff, moist, tan, fat
⑥CLAY, hard, slightly moist, tan and gray, fat
⑦CLAYSTONE, very hard, dry, gray

⑧ CLAY, FILL soft, slightly moist, dark brown, trace gravel, fat (CH)
⑨ CLAY, FILL very soft, moist, dark brown, fat (CL)
⑩ CLAY, stiff to very stiff, moist, tan and gray, fat (CL)
⑪ CLAY, very hard, dry, tan, fat
⑫ CLAY, very hard, dry, gray

NOTE:

DRILLED SHAFTS SHALL BE DRILLED TO THE LENGTH SHOWN OR DEEPER AS NECESSARY TO OBTAIN A MINIMUM OF 1 SHAFT DIAMETER OF PENETRATION INTO THE VERY HARD CLAYSTONE.

## ELEVATION

STATE OF TEXAS
NABILA M. BOUTROS
90774
LICENSED PROFESSIONAL ENGINEER
1/18/13

0 20 40
SCALE: 1"=40' H
1"=40' V

HL93 LOADING

| NO | REVISION | DRAWN | APPROVED | DATE |
|---|---|---|---|---|
| 1 | ADDENDUM NO. 2 | SZT | NMB | 1/18/13 |
| | | | | / / |
| | | | | / / |

URS 9901 IH10 WEST, SUITE 350 SAN ANTONIO, TEXAS 78230 (FIRM # 3162)
TEL: 210.377.3764 FAX: 210.377.0622 WWW.URSCORP.COM

SEA STRUCTURAL ENGINEERING ASSOCIATES, INC. CONSULTING ENGINEERS SAN ANTONIO, TEXAS TBPE REG. NO. F-199

CITY OF SAN ANTONIO
CAPITAL IMPROVEMENTS MANAGEMENT SERVICES DEPARTMENT

MARKET STREET REALIGNMENT
IH-37 SOUTHBOUND EXIT RAMP

# BRIDGE LAYOUT

SHEET 2 OF 3

| | | |
|---|---|---|
| 100% SUBMITTAL | PROJECT NO.: 40-00300 | DATE: 1/16/2013 |
| DRWN. BY: SZT | DSGN. BY: NMB / CHKD. BY: DMM | SHEET NO.: 442 |

DATE: 1/16/2013 4:25:39 PM
FILE: market_brgplin_02.dgn

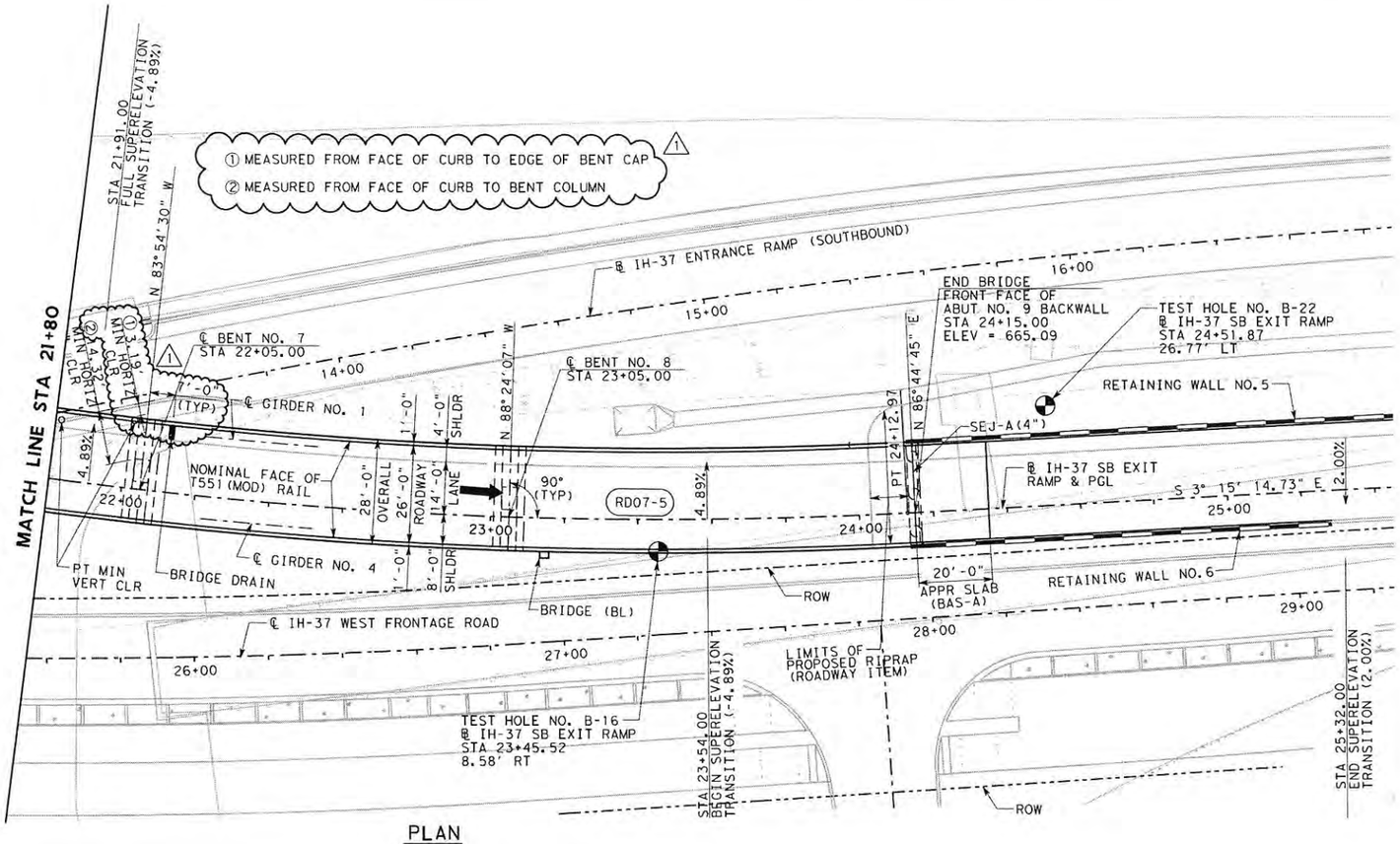


PLAN

## HORIZONTAL CURVE DATA

@ IH-37 SOUTHBOUND EXIT RAMP

RD07-5

PI STA 22+52.96
N 13,702,181.7660
E 2,134,100.0348
D = 4°29'38"
R = 1,275.00'
L = 321.74'
T = 161.73'
Δ = 14°27'30" (LT)

## LEGEND

BORING LOCATION

PROPOSED RETAINING WALL

NOTE:

DRILLED SHAFTS SHALL BE DRILLED TO THE LENGTH SHOWN OR DEEPER AS NECESSARY TO OBTAIN A MINIMUM OF 1 SHAFT DIAMETER OF PENETRATION INTO THE VERY HARD CLAYSTONE.

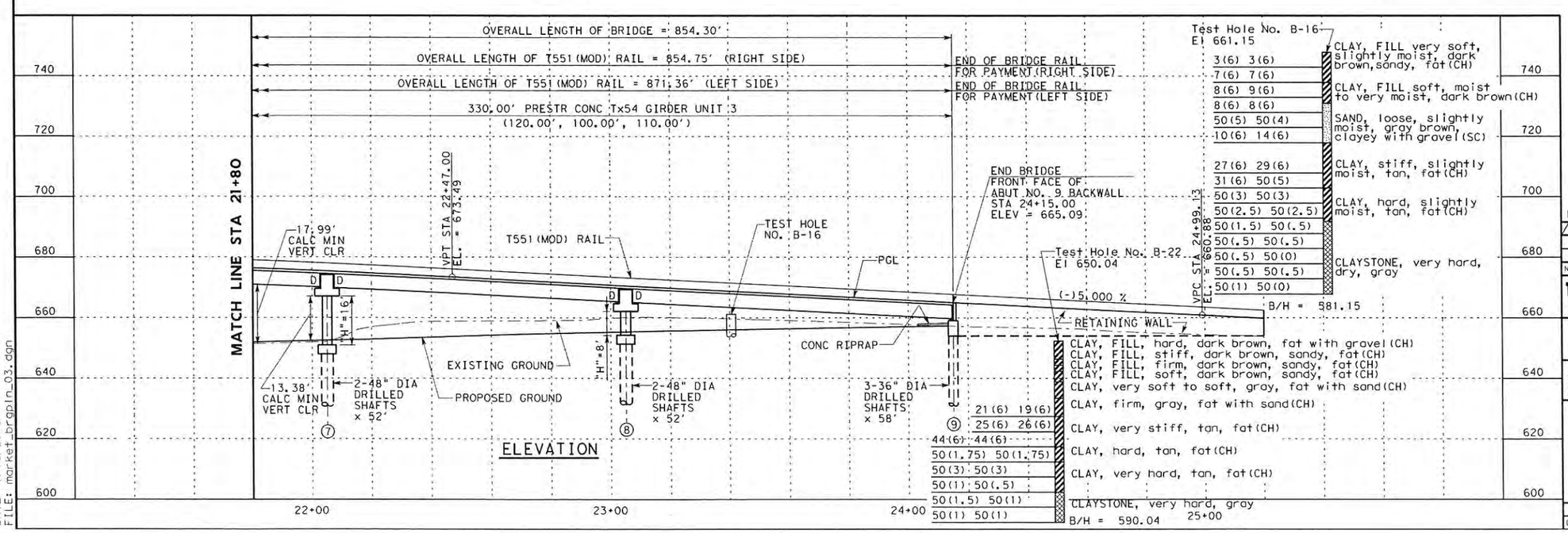


ELEVATION

STATE OF TEXAS
NABILA M. BOUTROS
90774
LICENSED PROFESSIONAL ENGINEER
1/18/13

0 20 40
SCALE: 1"=40' H
1"=40' V

HL93 LOADING

| NO | REVISION | DRAWN | APPROVED | DATE |
|---|---|---|---|---|
| 1 | ADDENDUM NO. 2 | SZT | NMB | 1/18/13 |
| | | | | / / |
| | | | | / / |

URS 9901 IH10 WEST, SUITE 350 SAN ANTONIO, TEXAS 78230 (FIRM # 3162)
TEL: 210.377.3764 FAX: 210.377.0622 WWW.URSCORP.COM

SEA STRUCTURAL ENGINEERING ASSOCIATES, INC. CONSULTING ENGINEERS SAN ANTONIO, TEXAS TBPE REG. NO. F-199

CITY OF SAN ANTONIO
CAPITAL IMPROVEMENTS MANAGEMENT SERVICES DEPARTMENT

MARKET STREET REALIGNMENT
IH-37 SOUTHBOUND EXIT RAMP
BRIDGE LAYOUT

SHEET 3 OF 3

| 100% SUBMITTAL | PROJECT NO.: 40-00300 | DATE: 1/16/2013 |
|---|---|---|
| DRWN. BY: SZT | DSGN. BY: NMB | CHKD. BY: DMM | SHEET NO.: 443 |

DATE: 1/16/2013 4:28:04 PM
FILE: market_bragln_03.dgn

# SUMMARY OF ESTIMATED QUANTITIES

| ITEM NO. | 0400 | 0403 | 0416 | | | 0420 | | | | | 0422 | 0425 | 0428 | 0450 | 0454 | 0471 |
|---|---|---|---|---|---|---|---|---|---|---|---|---|---|---|---|---|
| DESCRIPTION CODE | 2004 | 2001 | 2001 | 2004 | 2006 | 2003 | 2004 | 2017 | 2018 | 2033 | 2001 | 2068 | 2001 | 2210 | 2001 | 2003 |
| ITEM / DESCRIPTION | STRUCT EXCAV (BRIDGE) ① | TEMP. SPECIAL SHORING | DRILLED SHAFT | | | CL C CONC | | | | CL S CONC | REINF CONC SLAB ⑤ | PRESTR CONC GIRDER (TX 54) | CONC SURF TREAT (CLASS I) | RAIL (TY T551) (MOD) | SEALED EXPANSION JOINT (4 IN) (SEJ-A) | GRATE & FRAME |
| | | | (18 IN) | (36 IN) | (48 IN) | (ABUT) | (BENT) ② | (BENT) ③ (MASS PLACEMENT) | (FOOTING) ④ (MASS PLACEMENT) | (APPR SLAB) | | | | | | |
| | CY | SF | LF | LF | LF | CY | CY | CY | CY | CY | SF | LF | SY | LF | LF | EA |
| | | | | | | | | | | | | | | | | |
| 2 - ABUTMENTS | | | 40 | 372 | | 41.8 | | | | 41.7 | | | | 18.0 | 53 | |
| 7 - INTERIOR BENTS | 264.5 | 2,831 | | | 728 | | 110.7 | 298.3 | 124.6 | | | | | | 106 | |
| 201.30' PRESTR CONC GIRDER UNIT 1 | | | | | | | | | | | | | | | | |
| 323.00' PRESTR CONC GIRDER UNIT 2 | | | | | | | | | | | 5,644 | 776.82 | 667 | 403.1 | | 2 |
| 330.00' PRESTR CONC GIRDER UNIT 3 | | | | | | | | | | | 9,065 | 1,238.15 | 1,070 | 647.5 | | |
| | | | | | | | | | | | 9,205 | 1,267.93 | 1,093 | 657.5 | | 2 |
| | | | | | | | | | | | | | | | | |
| | | | | | | | | | | | | | | | | |
| TOTAL | 264.5 | 2,831 | 40 | 372 | 728 | 41.8 | 110.7 | 298.3 | 124.6 | 41.7 | 23,914 | 3,282.90 | 2,830 | 1,726.1 | 159 | 4 |

① FOR CONTRACTOR'S INFORMATION ONLY
② FOR BENT COLUMNS ONLY
③ FOR BENT CAPS ONLY
④ FOR BENT FOOTINGS ONLY
⑤ SEE LAYOUT FOR SURFACE TEXTURE REQUIREMENTS

## BEARING SEAT ELEVATIONS

| | | GIRDER 1 | GIRDER 2 | GIRDER 3 | GIRDER 4 |
|---|---|---|---|---|---|
| ABUT 1 | (FWD) | 670.222 | 670.076 | 669.929 | 669.782 |
| BENT 2 | (BK) | ~~671.398~~ | ~~671.188~~ | ~~670.977~~ | ~~670.767~~ |
| | (FWD) | 671.296 | 671.069 | 670.842 | 670.616 |
| BENT 3 | (BK) | ~~673.458~~ | ~~673.155~~ | ~~672.853~~ | ~~672.551~~ △1 |
| | (FWD) | 673.817 | 673.515 | 673.213 | 672.911 |
| BENT 4 | (BK) | 675.854 | 675.552 | 675.250 | 674.948 |
| | (FWD) | 675.874 | 675.585 | 675.297 | 675.008 |
| BENT 5 | (BK) | 675.876 | 675.643 | 675.410 | 675.177 |
| | (FWD) | 675.796 | 675.580 | 675.364 | 675.149 |
| BENT 6 | (BK) | 673.758 | 673.811 | 673.863 | 673.916 |
| | (FWD) | 673.576 | 673.648 | 673.720 | 673.791 |
| BENT 7 | (BK) | 669.171 | 669.537 | 669.903 | 670.269 |
| | (FWD) | 668.874 | 668.250 | 669.626 | 670.002 |
| BENT 8 | (BK) | 664.313 | 664.688 | 665.062 | 665.435 |
| | (FWD) | 663.771 | 664.138 | 664.506 | 664.874 |
| ABUT 9 | (BK) | 658.843 | 659.028 | 659.214 | 659.399 |

STATE OF TEXAS
DANIEL M. MORALES
100060
LICENSED
PROFESSIONAL ENGINEER

1-18-13

HL93 LOADING

| NO | REVISION | DRAWN | APPROVED | DATE |
|---|---|---|---|---|
| 1 | REVISED BENT 2(FWD) AND BENT 3(BK) BEARING SEAT ELEVATIONS | SZT | DMN | 1/18/13 |
| | | | | / / |
| | | | | / / |

URS 9901 IH10 WEST, SUITE 350 SAN ANTONIO, TEXAS 78230 (FIRM # 3162)
TEL: 210.377.3764 FAX: 210.377.0622 WWW.URSCORP.COM

SSA STRUCTURAL ENGINEERING ASSOCIATES, INC. CONSULTING ENGINEERS SAN ANTONIO, TEXAS TBPE REG. NO. F-195

CITY OF SAN ANTONIO
CAPITAL IMPROVEMENTS MANAGEMENT SERVICES DEPARTMENT

MARKET STREET REALIGNMENT
IH-37 SOUTHBOUND EXIT RAMP

ESTIMATED QUANTITIES AND BEARING SEAT ELEVATIONS

| | | | |
|---|---|---|---|
| 100% SUBMITTAL | PROJECT NO.: 40-00300 | | DATE: 1/15/2013 |
| DRWN. BY: SZT | DSGN. BY: NMB | CHKD. BY: DMM | SHEET NO.: 444 |

DATE: 1/15/2013 5:30:42 PM
FILE: market_estqty_01.dgn

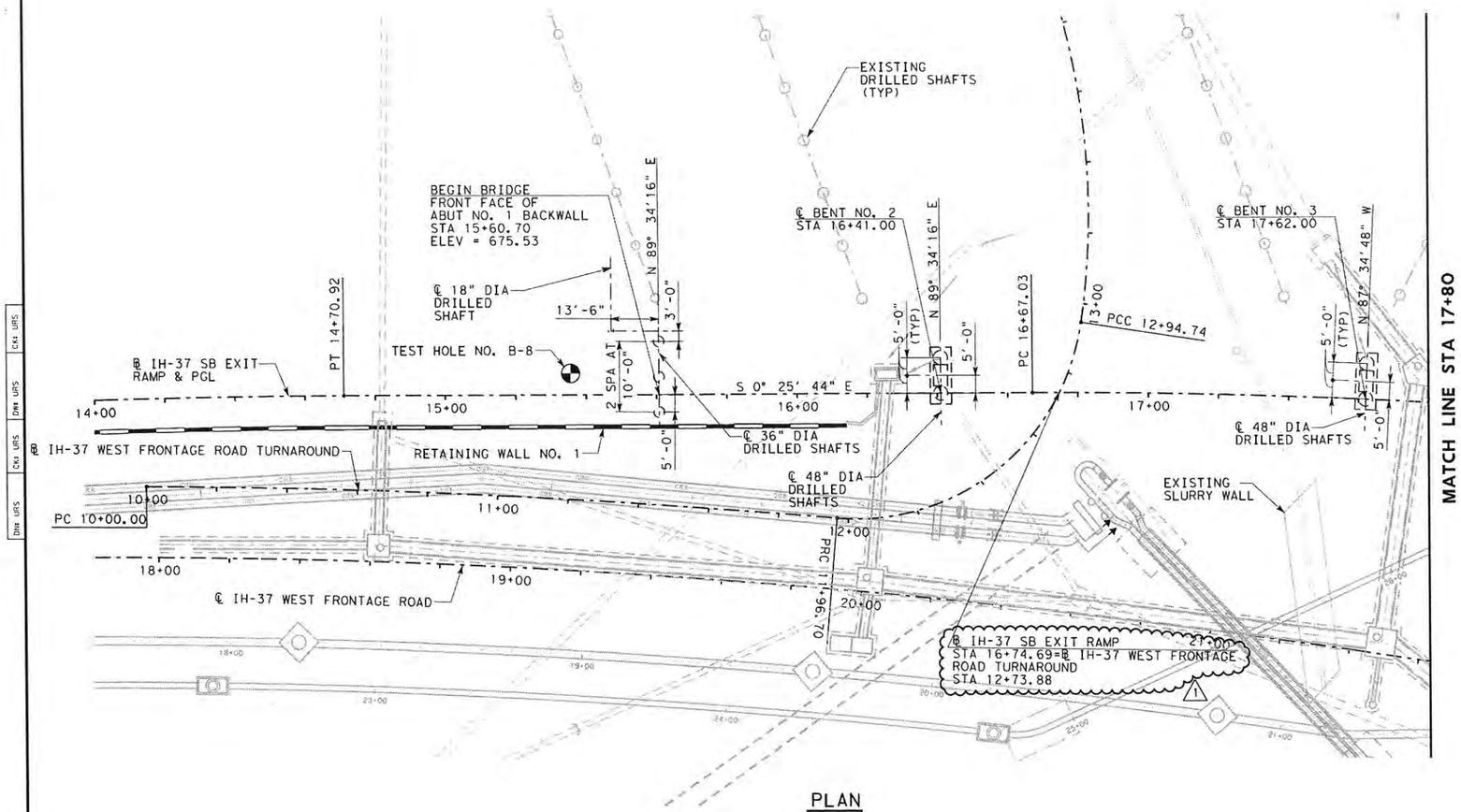


PLAN

## LEGEND

- BORING LOCATION
- PROPOSED RETAINING WALL

STATE OF TEXAS
DANIEL M. MORALES
100060
LICENSED
PROFESSIONAL ENGINEER

1-18-13

0 20 40
SCALE: 1"=40' H
1"=40' V

HL93 LOADING

| NO | REVISION | DRAWN | APPROVED | DATE |
|---|---|---|---|---|
| 1 | ADDENDUM NO. 2 | SZT | NMB | 1/18/13 |
| | | | | / / |
| | | | | / / |

URS 9901 IH10 WEST, SUITE 350 SAN ANTONIO, TEXAS 78230 (FIRM # 3162)
TEL: 210.377.3764 FAX: 210.377.0622 WWW.URSCORP.COM

SEA STRUCTURAL ENGINEERING ASSOCIATES, INC. CONSULTING ENGINEERS SAN ANTONIO, TEXAS TBPE REG. NO. F-199

CITY OF SAN ANTONIO
CAPITAL IMPROVEMENTS MANAGEMENT SERVICES DEPARTMENT

MARKET STREET REALIGNMENT
IH-37 SOUTHBOUND EXIT RAMP

# FOUNDATION LAYOUT

SHEET 1 OF 3

| | | | |
|---|---|---|---|
| 100% SUBMITTAL | PROJECT NO.: 40-00300 | | DATE: 1/15/2013 |
| DRWN. BY: SZT | DSGN. BY: NMB | CHKD. BY: DMM | SHEET NO.: 445 |

DATE: 1/15/2013 5:28:15 PM
FILE: market_fndpln_01.dgn

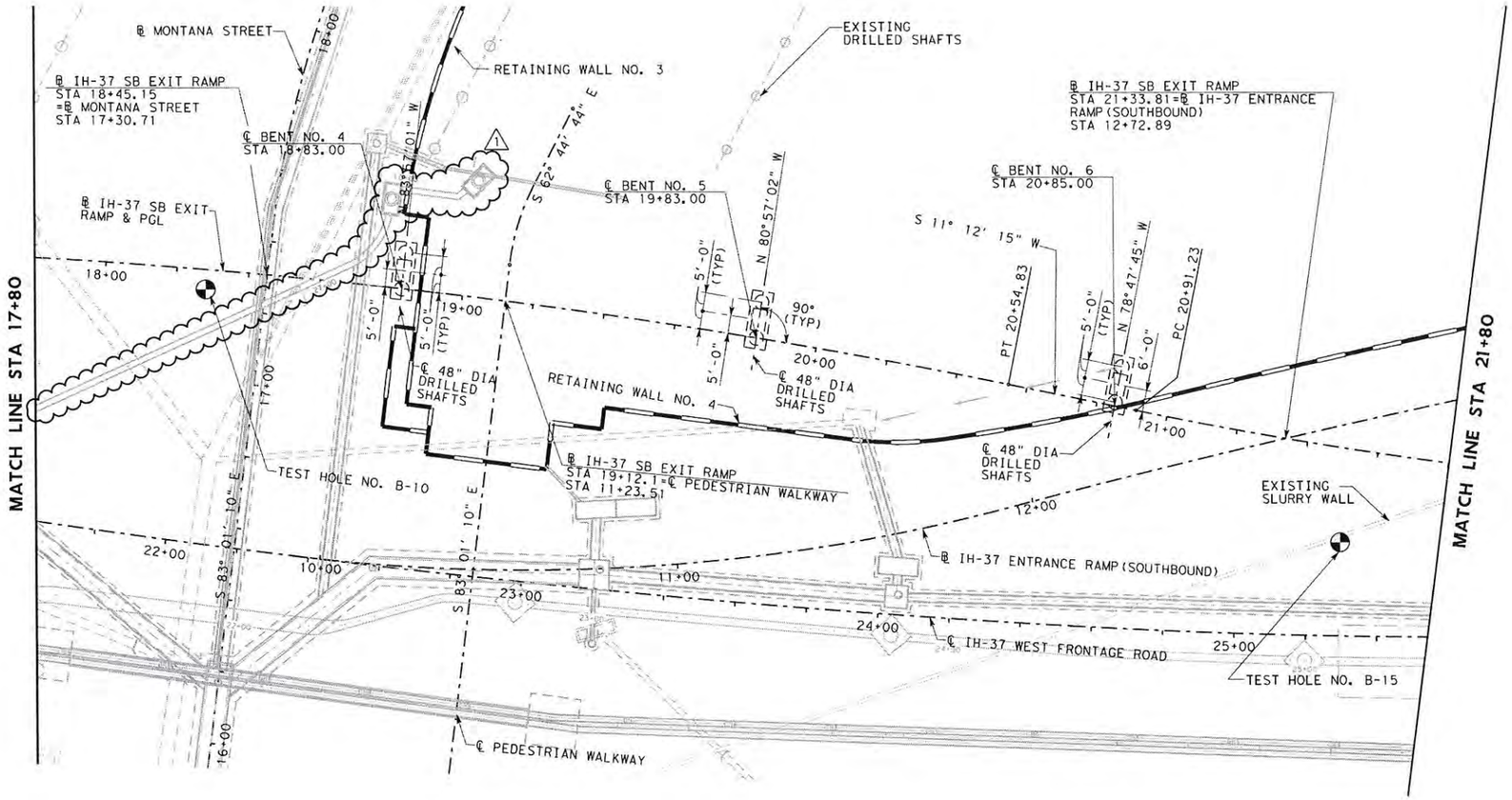


PLAN

LEGEND

BORING LOCATION

PROPOSED RETAINING WALL

STATE OF TEXAS
DANIEL M. MORALES
100060
LICENSED
PROFESSIONAL ENGINEER

1-18-13

0 20 40

SCALE: 1"=40' H
1"=40' V

HL93 LOADING

| NO | REVISION | DRAWN | APPROVED | DATE |
|---|---|---|---|---|
| 1 | ADDENDUM NO. 2 | SZT | DMM | 1/18/13 |
| | | | | / / |
| | | | | / / |


URS 9901 IH10 WEST, SUITE 350 SAN ANTONIO, TEXAS 78230 (FIRM # 3162)
TEL: 210.377.3764 FAX: 210.377.0622 WWW.URSCORP.COM

SEA STRUCTURAL ENGINEERING ASSOCIATES, INC. CONSULTING ENGINEERS SAN ANTONIO, TEXAS TBPE REG. NO. F-199


CITY OF SAN ANTONIO
CAPITAL IMPROVEMENTS MANAGEMENT SERVICES DEPARTMENT

MARKET STREET REALIGNMENT
IH-37 SOUTHBOUND EXIT RAMP

FOUNDATION LAYOUT

SHEET 2 OF 3

| | | | |
|---|---|---|---|
| 100% SUBMITTAL | PROJECT NO.: 40-00300 | | DATE: 1/16/2013 |
| DRWN. BY: SZT | DSGN. BY: NMB | CHKD. BY: DMM | SHEET NO.: 446 |

DATE: 1/16/2013 10:59:29 AM
FILE: market_fndpln_02.dgn

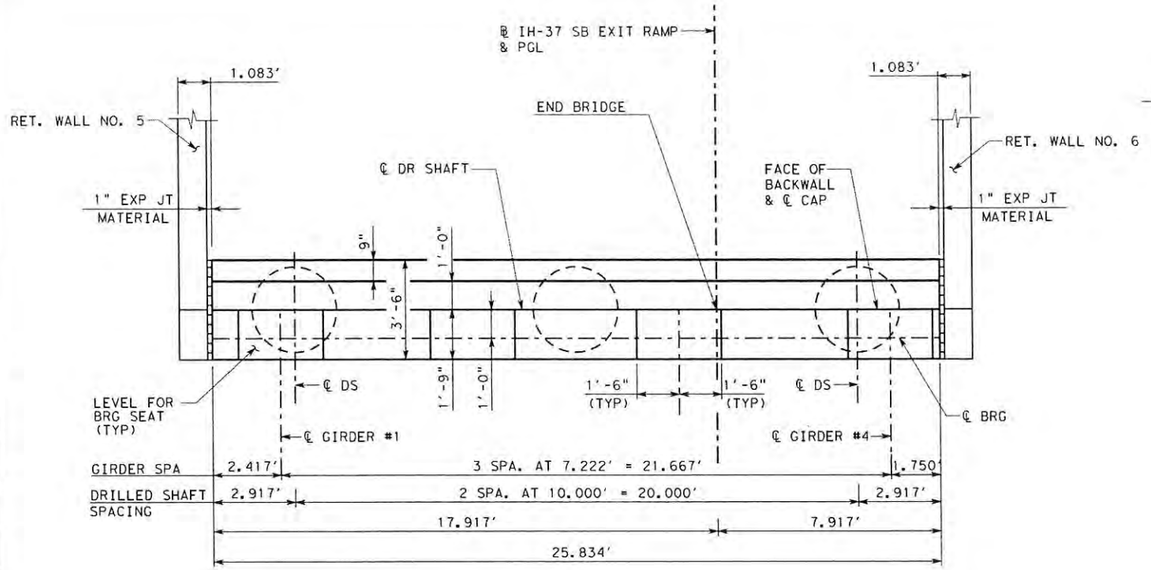


## PLAN
(LOOKING FORWARD STATION)

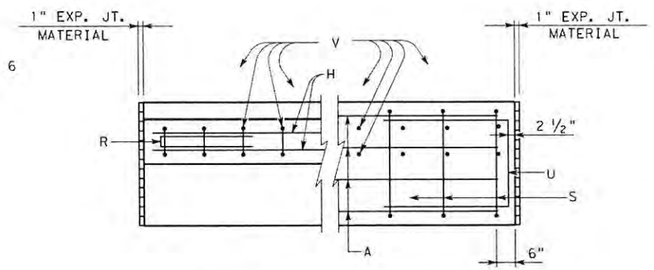


BACKWALL CAP

| TABLE OF ESTIMATED QUANTITIES | | | | |
|---|---|---|---|---|
| BAR | NO. | SIZE | LENGTH | WEIGHT |
| A | 8 | #11 | 24'-10" | 1,056 |
| H | 10 | #6 | 25'-6" | 383 |
| R | 10 | #4 | 5'-6" | 37 |
| S | 22 | #5 | 16'-4" | 375 |
| 1 T | 10 | #5 | 24'-10" | 259 |
| U | 4 | #6 | 8'-0" | 48 |
| V | 27 | #5 | 14'-7" | 411 |
| ① REINFORCING STEEL | | | Lb | 1 2,569 |
| CLASS "C" CONCRETE | | | CY | 21.6 |

① FOR CONTRACTOR'S INFORMATION ONLY

## GENERAL NOTES

1. DESIGNED IN ACCORDANCE WITH AASHTO 2012 LRFD BRIDGE DESIGN SPECIFICATIONS FOR HL-93 LOADING.
2. CONCRETE STRENGTH f'c = 3600 psi
3. ALL REINFORCING STEEL SHALL BE GRADE 60.
4. CALCULATED FOUNDATION LOADS : CAP DR SHAFTS = 145 TONS/DR SHAFT.
5. SEE CONCRETE RIPRAP STANDARD SHEET, CRR, FOR RIPRAP ATTACHMENT DETAILS.
6. CHAMFER ALL EXPOSED EDGES ¾" UNLESS OTHERWISE NOTED.

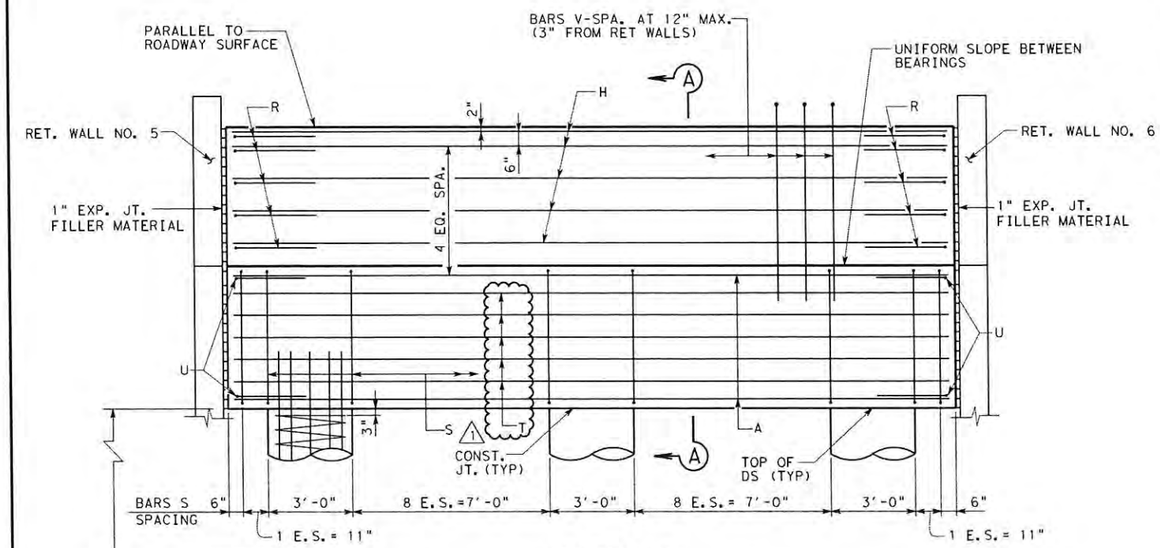


## ELEVATION

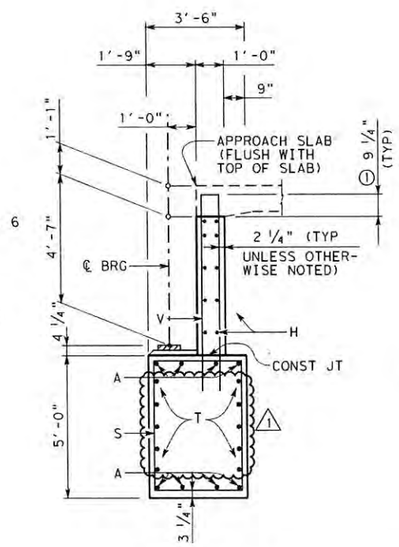


## SECTION A-A
① INCREASE AS REQUIRED TO MAINTAIN 3 ¾" FROM FINISHED GRADE.

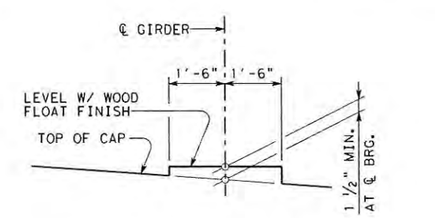


## BEARING SEAT DETAIL
(BEARING SURFACE MUST BE CLEAN AND FREE OF ALL LOOSE MATERIAL BEFORE PLACING BEARING PAD.)

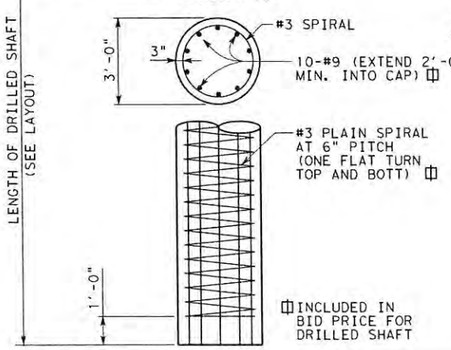


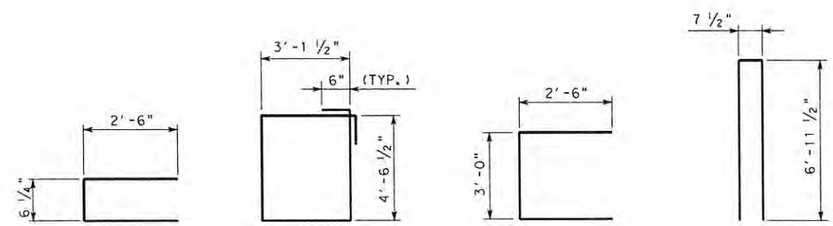


BARS R BARS S BARS U BARS V

STATE OF TEXAS
DANIEL M. MORALES
100060
LICENSED PROFESSIONAL ENGINEER

DMM
1-18-13

HL93 LOADING

| NO | REVISION | DRAWN | APPROVED | DATE |
|---|---|---|---|---|
| 1 | ADDENDUM NO. 2 | SZT | DMM | 1/18/13 |
| | | | | / / |
| | | | | / / |

URS 9901 IH10 WEST, SUITE 350 SAN ANTONIO, TEXAS 78230 (FIRM # 3162)
TEL: 210.377.3764 FAX: 210.377.0622 WWW.URSCORP.COM

SEA STRUCTURAL ENGINEERING ASSOCIATES, INC. CONSULTING ENGINEERS SAN ANTONIO, TEXAS TBPE REG. NO. F-199

CITY OF SAN ANTONIO
CAPITAL IMPROVEMENTS MANAGEMENT SERVICES DEPARTMENT

MARKET STREET REALIGNMENT
IH-37 SOUTHBOUND EXIT RAMP
ABUTMENT NO. 9

SHEET 1 OF 1

| 100% SUBMITTAL | PROJECT NO.: 40-00300 | | DATE: 1/16/2013 |
|---|---|---|---|
| DRWN. BY: SZT | DSGN. BY: NMB | CHKD. BY: DMM | SHEET NO.: 450 |

DATE: 1/16/2013 10:25:27 AM
FILE: market_abut08_01.dgn

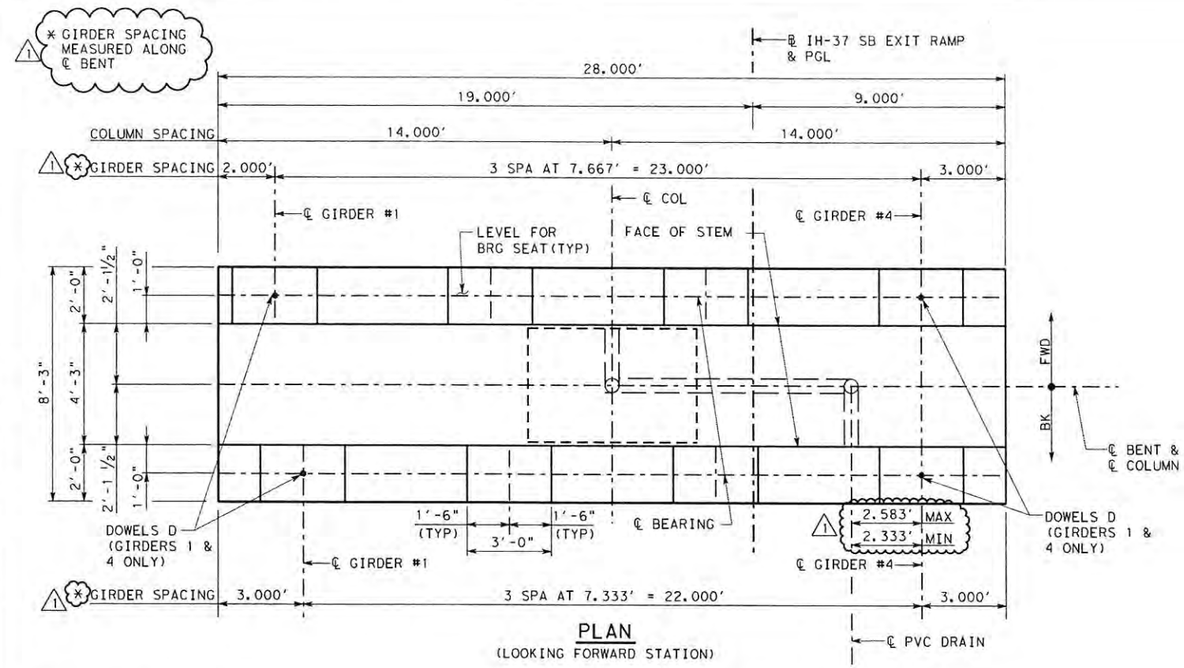


PLAN
(LOOKING FORWARD STATION)

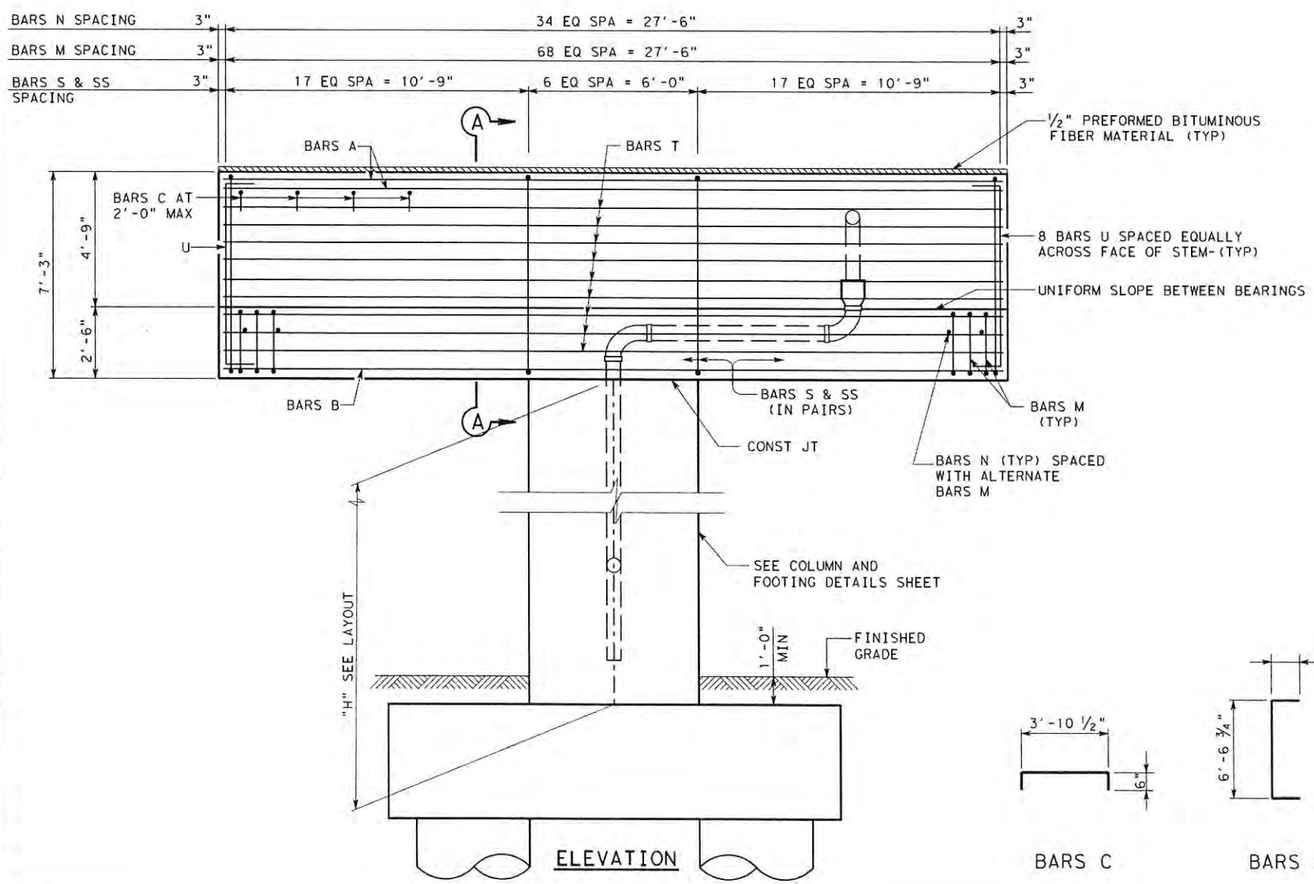


ELEVATION

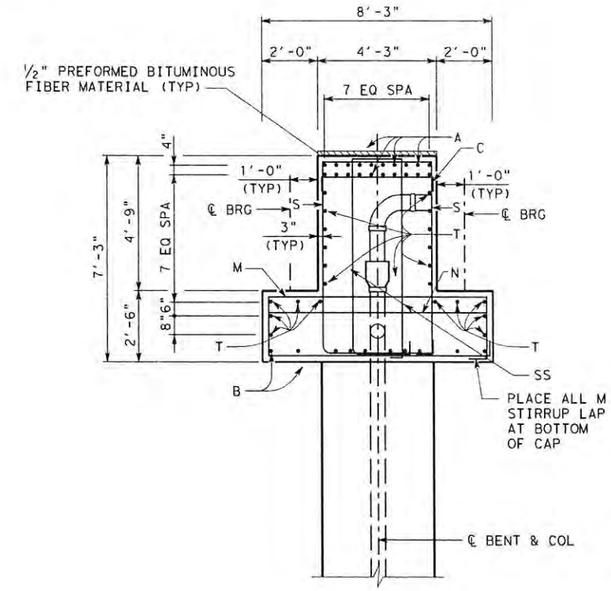


SECTION A-A

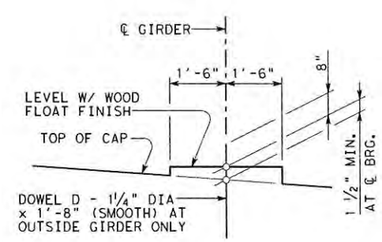


BEARING SEAT DETAIL

(BEARING SURFACE MUST BE CLEAN AND FREE OF ALL LOOSE MATERIAL BEFORE PLACING BEARING PAD.)

(SEE MISCELLANEOUS BENT DETAILS SHEET FOR BEARING SEAT BUILD-UPS EXCEEDING 3")

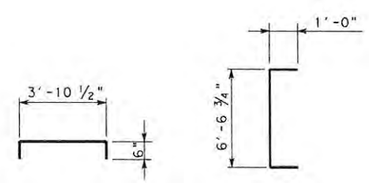


BARS C




BARS U

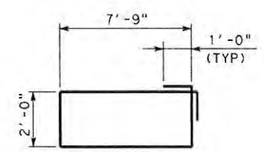


BARS M

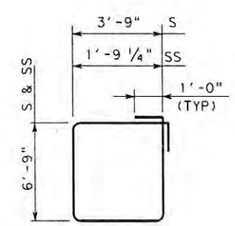


BARS S & SS

## TABLE OF ESTIMATED QUANTITIES

| BAR | NO. | SIZE | LENGTH | WEIGHT |
|---|---|---|---|---|
| A | 20 | #11 | 27'-8" | 2940 |
| B | 10 | #11 | 27'-8" | 1470 |
| C | 16 | #4 | 4'-11" | 53 |
| D | 4 | 1¼"D | 1'-8" | 28 |
| M | 69 | #6 | 21'-6" | 2228 |
| N | 35 | #6 | 7'-11" | 416 |
| S | 41 | #6 | 23'-0" | 1416 |
| SS | 41 | #6 | 19'-1" | 1175 |
| T | 22 | #6 | 27'-8" | 914 |
| U | 16 | #5 | 8'-7" | 143 |
| | | | | |
| | | | | |
| ① REINFORCING STEEL | | | Lb | 10,783 |
| CLASS "C" CONCRETE | | | CY | 42.5 |

① FOR CONTRACTOR'S INFORMATION ONLY

## GENERAL NOTES

1. DESIGNED IN ACCORDANCE WITH AASHTO 2012 LRFD BRIDGE DESIGN SPECIFICATIONS FOR HL-93 LOADING.
2. CONCRETE STRENGTH f'c = 3600 psi
3. ALL REINFORCING STEEL SHALL BE GRADE 60.
4. CHAMFER ALL EXPOSED EDGES ¾" UNLESS OTHERWISE NOTED.
5. ADJUST SPACING OF BARS B AND T AS REQUIRED TO CLEAR DRAIN PIPE.

STATE OF TEXAS
DANIEL M. MORALES
100060
LICENSED PROFESSIONAL ENGINEER

1-18-13

HL93 LOADING

| NO | REVISION | DRAWN | APPROVED | DATE |
|---|---|---|---|---|
| 1 | ADDENDUM NO. 2 | SZT | DMM | 1/18/13 |
| | | | | / / |
| | | | | / / |

URS 9901 IH10 WEST, SUITE 350 SAN ANTONIO, TEXAS 78230 (FIRM # 3162)
TEL: 210.377.3764 FAX: 210.377.0622 WWW.URSCORP.COM

SEA STRUCTURAL ENGINEERING ASSOCIATES, INC. CONSULTING ENGINEERS SAN ANTONIO, TEXAS TBPE REG. NO. F-199

CITY OF SAN ANTONIO
CAPITAL IMPROVEMENTS MANAGEMENT SERVICES DEPARTMENT

MARKET STREET REALIGNMENT
IH-37 SOUTHBOUND EXIT RAMP
INTERIOR BENT
NO. 2
PLAN, ELEVATION AND DETAILS

| | | |
|---|---|---|
| 100% SUBMITTAL | PROJECT NO.: 40-00300 | DATE: 1/16/2013 |
| DRWN. BY: SZT | DSGN. BY: NMB CHKD. BY: DMM | SHEET NO.: 451 |

DATE: 1/16/2013 1:49:39 PM
FILE: market_bent_02.dgn

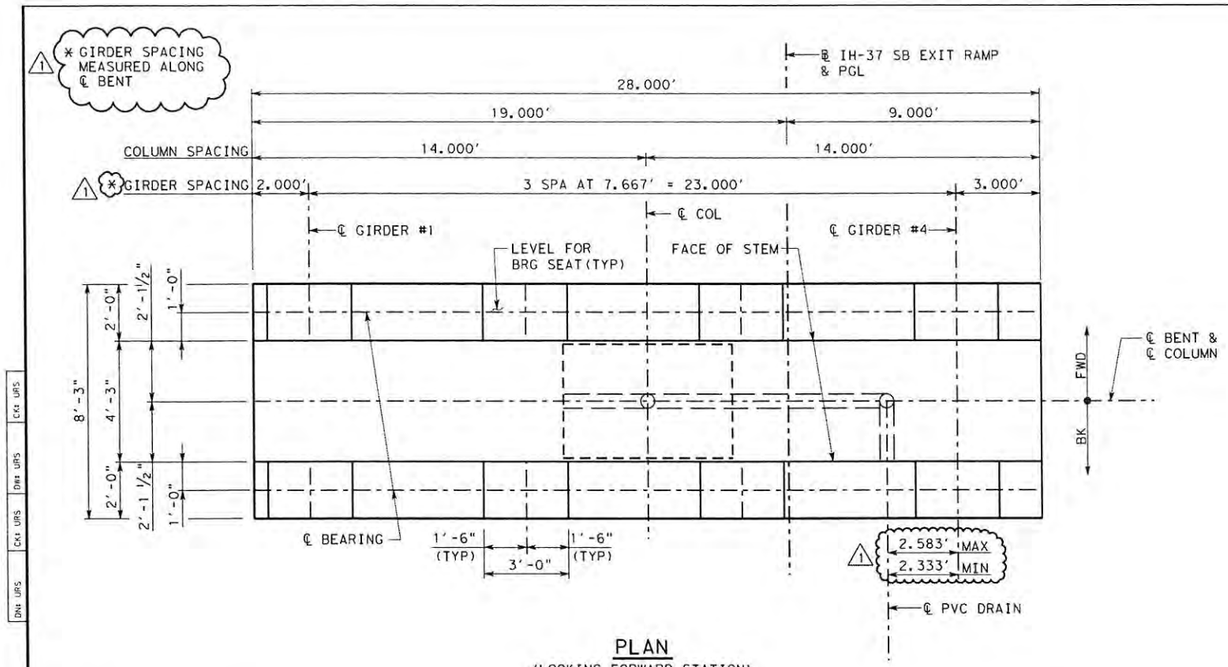


## PLAN

(LOOKING FORWARD STATION)

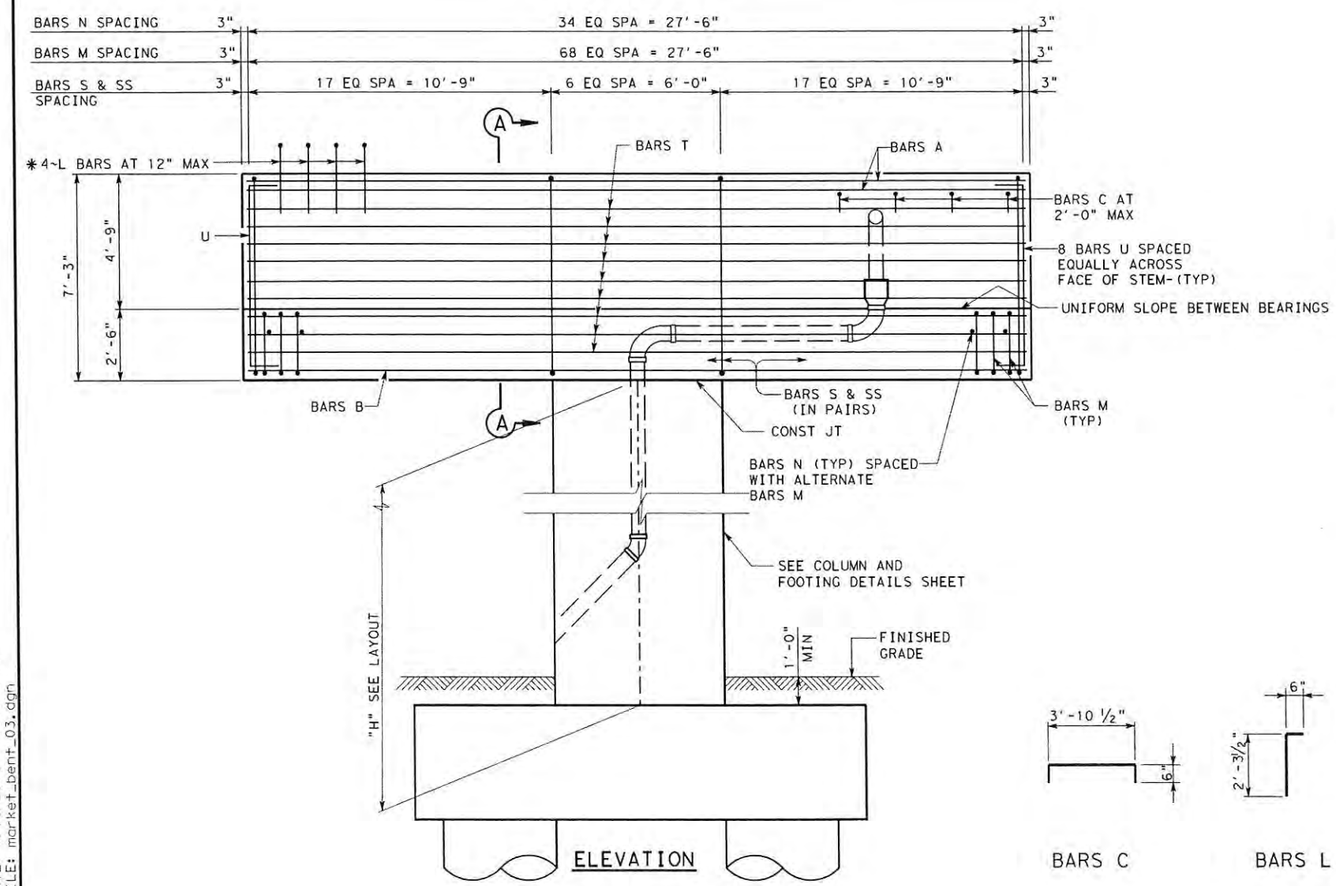


## ELEVATION

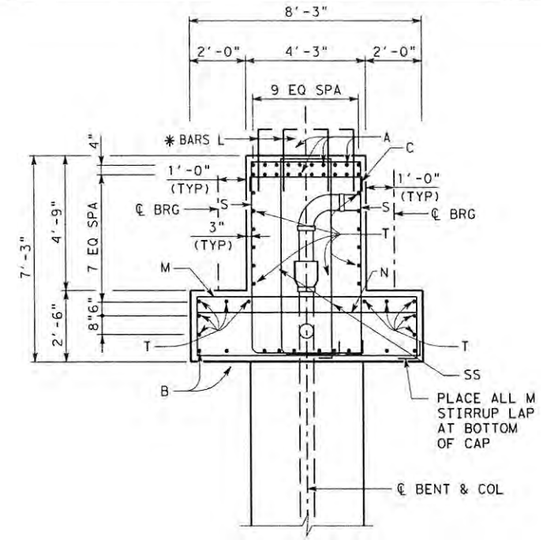


## SECTION A-A

## TABLE OF ESTIMATED QUANTITIES

| BAR | NO. | SIZE | LENGTH | WEIGHT |
|---|---|---|---|---|
| A | 20 | #11 | 27'-8" | 2940 |
| B | 10 | #11 | 27'-8" | 1470 |
| C | 16 | #4 | 4'-11" | 53 |
| L | 116 | #4 | 2'-10" | 220 |
| M | 69 | #6 | 21'-6" | 2228 |
| N | 35 | #6 | 7'-11" | 416 |
| S | 41 | #6 | 23'-0" | 1416 |
| SS | 41 | #6 | 19'-1" | 1175 |
| T | 22 | #6 | 27'-8" | 914 |
| U | 16 | #5 | 8'-7" | 143 |
| | | | | |
| | | | | |
| 1 REINFORCING STEEL | | | LB | 10,975 |
| CLASS "C" CONCRETE | | | CY | 42.7 |

1 FOR CONTRACTOR'S INFORMATION ONLY

* SEE MISCELLANEOUS BENT DETAILS SHEET FOR REINFORCING DETAILS OVER THE TOP OF INVERTED T-CAP AT THE EXPANSION JOINT LOCATION.

## GENERAL NOTES

1. DESIGNED IN ACCORDANCE WITH AASHTO 2012 LRFD BRIDGE DESIGN SPECIFICATIONS FOR HL-93 LOADING.
2. CONCRETE STRENGTH f'c = 3600 psi
3. ALL REINFORCING STEEL SHALL BE GRADE 60.
4. CHAMFER ALL EXPOSED EDGES ¾" UNLESS OTHERWISE NOTED.
5. ADJUST SPACING OF BARS B AND T AS REQUIRED TO CLEAR DRAIN PIPE.

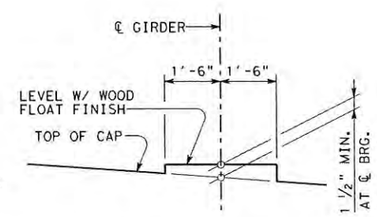


## BEARING SEAT DETAIL

(BEARING SURFACE MUST BE CLEAN AND FREE OF ALL LOOSE MATERIAL BEFORE PLACING BEARING PAD.)

(SEE MISCELLANEOUS BENT DETAILS SHEET FOR BEARING SEAT BUILD-UPS EXCEEDING 3")

STATE OF TEXAS
DANIEL M. MORALES
100060
LICENSED PROFESSIONAL ENGINEER

1-18-13

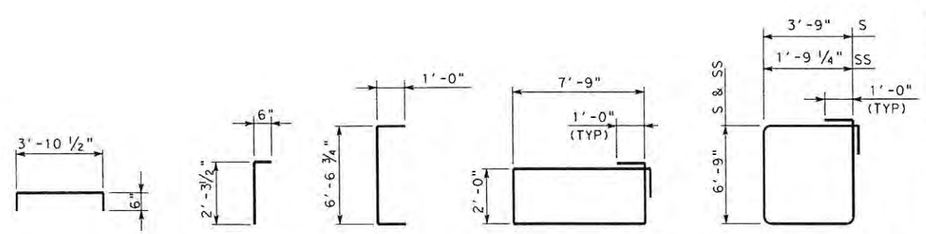


BARS C BARS L BARS U BARS M BARS S & SS

HL93 LOADING

| NO | REVISION | DRAWN | APPROVED | DATE |
|---|---|---|---|---|
| 1 | ADDENDUM NO. 2 | SZT | DMM | 1/18/13 |
| | | | | / / |
| | | | | / / |


URS 9901 IH10 WEST, SUITE 350 SAN ANTONIO, TEXAS 78230 (FIRM # 3162)
TEL: 210.377.3764 FAX: 210.377.0622 WWW.URSCORP.COM

SEA STRUCTURAL ENGINEERING ASSOCIATES, INC. CONSULTING ENGINEERS SAN ANTONIO, TEXAS TBPE REG. NO. F-199


CITY OF SAN ANTONIO
CAPITAL IMPROVEMENTS MANAGEMENT SERVICES DEPARTMENT

MARKET STREET REALIGNMENT
IH-37 SOUTHBOUND EXIT RAMP
# INTERIOR BENT NO. 3
PLAN, ELEVATION AND DETAILS

| 100% SUBMITTAL | PROJECT NO.: 40-00300 | | DATE: 1/16/2013 |
|---|---|---|---|
| DRWN. BY: SZT | DSGN. BY: NMB | CHKD. BY: DMM | SHEET NO.: 452 |

DATE: 1/16/2013 1:41:44 PM
FILE: market_bent_03.dgn

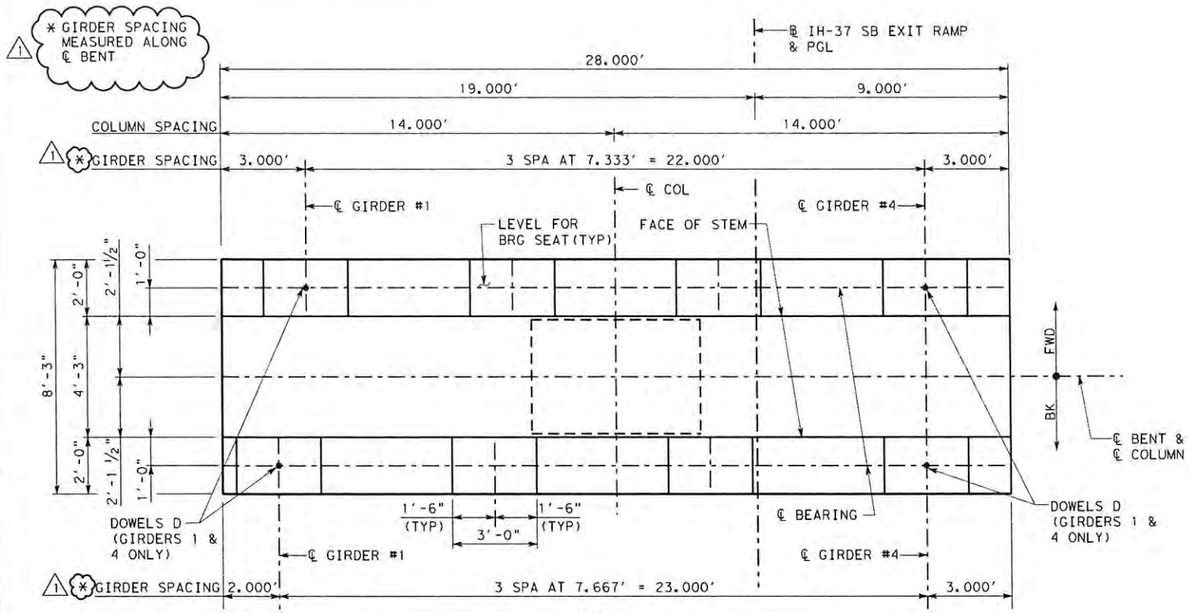


PLAN
(LOOKING FORWARD STATION)

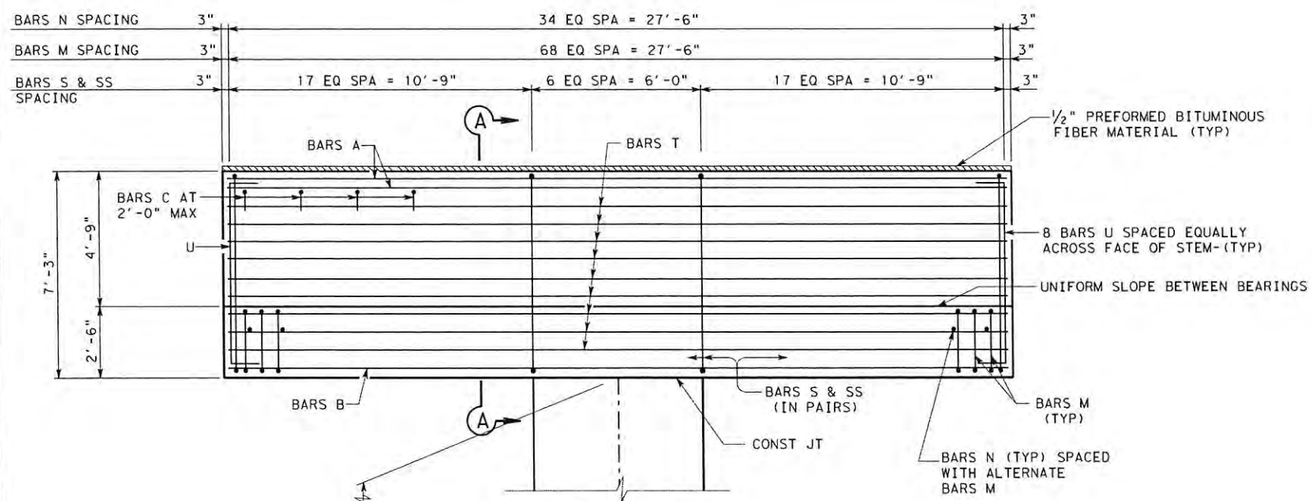


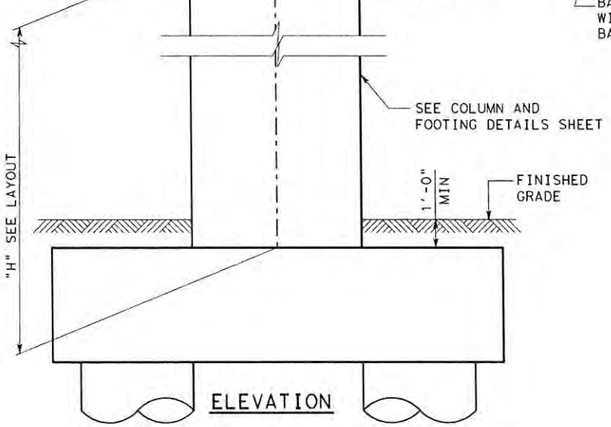


ELEVATION

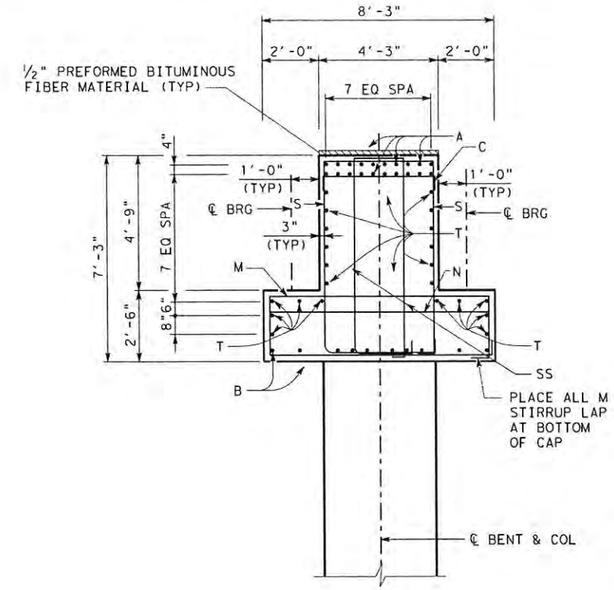


SECTION A-A

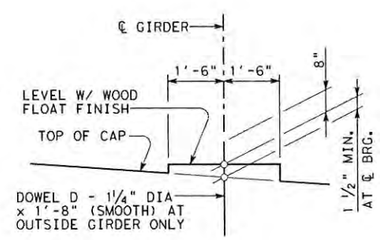


BEARING SEAT DETAIL

(BEARING SURFACE MUST BE CLEAN AND FREE OF ALL LOOSE MATERIAL BEFORE PLACING BEARING PAD.)

(SEE MISCELLANEOUS BENT DETAILS SHEET FOR BEARING SEAT BUILD-UPS EXCEEDING 3")

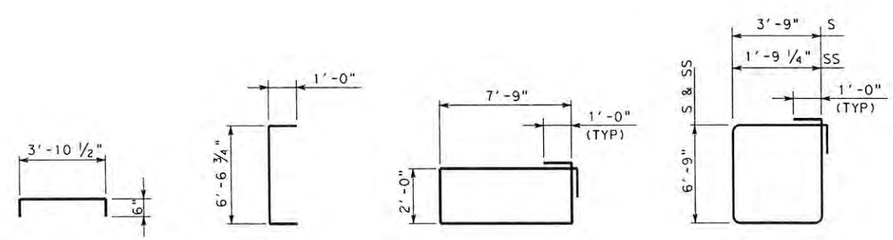


BARS C BARS U BARS M BARS S & SS

## TABLE OF ESTIMATED QUANTITIES

| BAR | NO. | SIZE | LENGTH | WEIGHT |
|---|---|---|---|---|
| A | 20 | #11 | 27'-8" | 2940 |
| B | 10 | #11 | 27'-8" | 1470 |
| C | 16 | #4 | 4'-11" | 53 |
| D | 4 | 1¼" D | 1'-8" | 28 |
| M | 69 | #6 | 21'-6" | 2228 |
| N | 35 | #6 | 7'-11" | 416 |
| S | 41 | #6 | 23'-0" | 1416 |
| SS | 41 | #6 | 19'-1" | 1175 |
| T | 22 | #6 | 27'-8" | 914 |
| U | 16 | #5 | 8'-7" | 143 |
| | | | | |
| | | | | |
| ① REINFORCING STEEL | | | Lb | 10,783 |
| CLASS "C" CONCRETE | | | CY | 42.5 |

① FOR CONTRACTOR'S INFORMATION ONLY

## GENERAL NOTES

1. DESIGNED IN ACCORDANCE WITH AASHTO 2012 LRFD BRIDGE DESIGN SPECIFICATIONS FOR HL-93 LOADING.
2. CONCRETE STRENGTH f'c = 3600 psi
3. ALL REINFORCING STEEL SHALL BE GRADE 60.
4. CHAMFER ALL EXPOSED EDGES ¾" UNLESS OTHERWISE NOTED.
5. ADJUST SPACING OF BARS B AND T AS REQUIRED TO CLEAR DRAIN PIPE.

STATE OF TEXAS
DANIEL M. MORALES
100060
LICENSED PROFESSIONAL ENGINEER

D. M. M.G
1-18-13

HL93 LOADING

| NO | REVISION | DRAWN | APPROVED | DATE |
|---|---|---|---|---|
| 1 | ADDENDUM NO. 2 | SZT | DMM | 1/18/13 |
| | | | | / / |
| | | | | / / |


URS 9901 IH10 WEST, SUITE 350 SAN ANTONIO, TEXAS 78230 (FIRM # 3162)
TEL: 210.377.3764 FAX: 210.377.0622 WWW.URSCORP.COM

SEA STRUCTURAL ENGINEERING ASSOCIATES, INC. CONSULTING ENGINEERS SAN ANTONIO, TEXAS TBPE REG. NO. F-199


CITY OF SAN ANTONIO
CAPITAL IMPROVEMENTS MANAGEMENT SERVICES DEPARTMENT

MARKET STREET REALIGNMENT
IH-37 SOUTHBOUND EXIT RAMP
# INTERIOR BENT NO. 4
PLAN, ELEVATION AND DETAILS

| 100% SUBMITTAL | PROJECT NO.: 40-00300 | | DATE: 1/16/2013 |
|---|---|---|---|
| DRWN. BY: SZT | DSGN. BY: NMB | CHKD. BY: DMM | SHEET NO.: 453 |

DATE: 1/16/2013 9:27:51 AM
FILE: market_bent_04.dgn

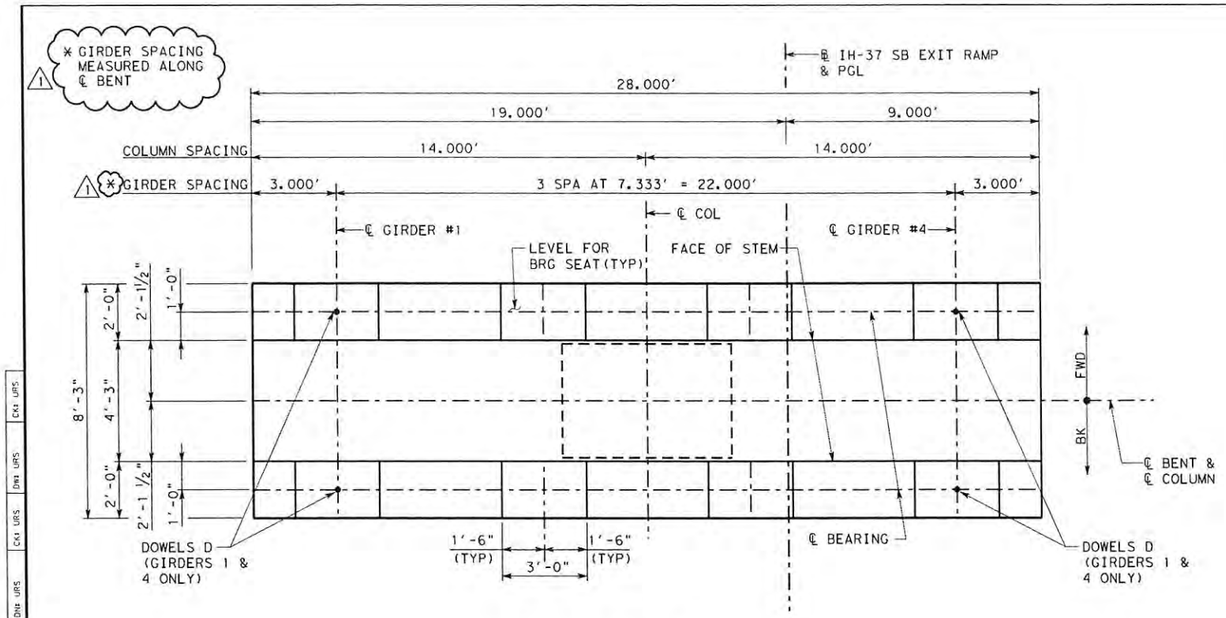


## PLAN

(LOOKING FORWARD STATION)

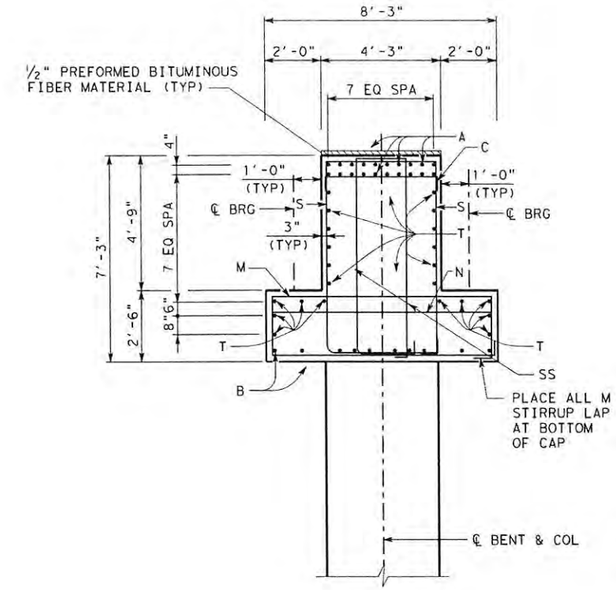


## SECTION A-A

| TABLE OF ESTIMATED QUANTITIES | | | | |
|---|---|---|---|---|
| BAR | NO. | SIZE | LENGTH | WEIGHT |
| A | 20 | #11 | 27'-8" | 2940 |
| B | 10 | #11 | 27'-8" | 1470 |
| C | 16 | #4 | 4'-11" | 53 |
| D | 4 | 1¼"D | 1'-8" | 28 |
| M | 69 | #6 | 21'-6" | 2228 |
| N | 35 | #6 | 7'-11" | 416 |
| S | 41 | #6 | 23'-0" | 1416 |
| SS | 41 | #6 | 19'-1" | 1175 |
| T | 22 | #6 | 27'-8" | 914 |
| U | 16 | #5 | 8'-7" | 143 |
| | | | | |
| | | | | |
| ① REINFORCING STEEL | | | Lb | 10,783 |
| CLASS "C" CONCRETE | | | CY | 42.5 |

① FOR CONTRACTOR'S INFORMATION ONLY

## GENERAL NOTES

1. DESIGNED IN ACCORDANCE WITH AASHTO 2012 LRFD BRIDGE DESIGN SPECIFICATIONS FOR HL-93 LOADING.
2. CONCRETE STRENGTH f'c = 3600 psi
3. ALL REINFORCING STEEL SHALL BE GRADE 60.
4. CHAMFER ALL EXPOSED EDGES ¾" UNLESS OTHERWISE NOTED.
5. ADJUST SPACING OF BARS B AND T AS REQUIRED TO CLEAR DRAIN PIPE.

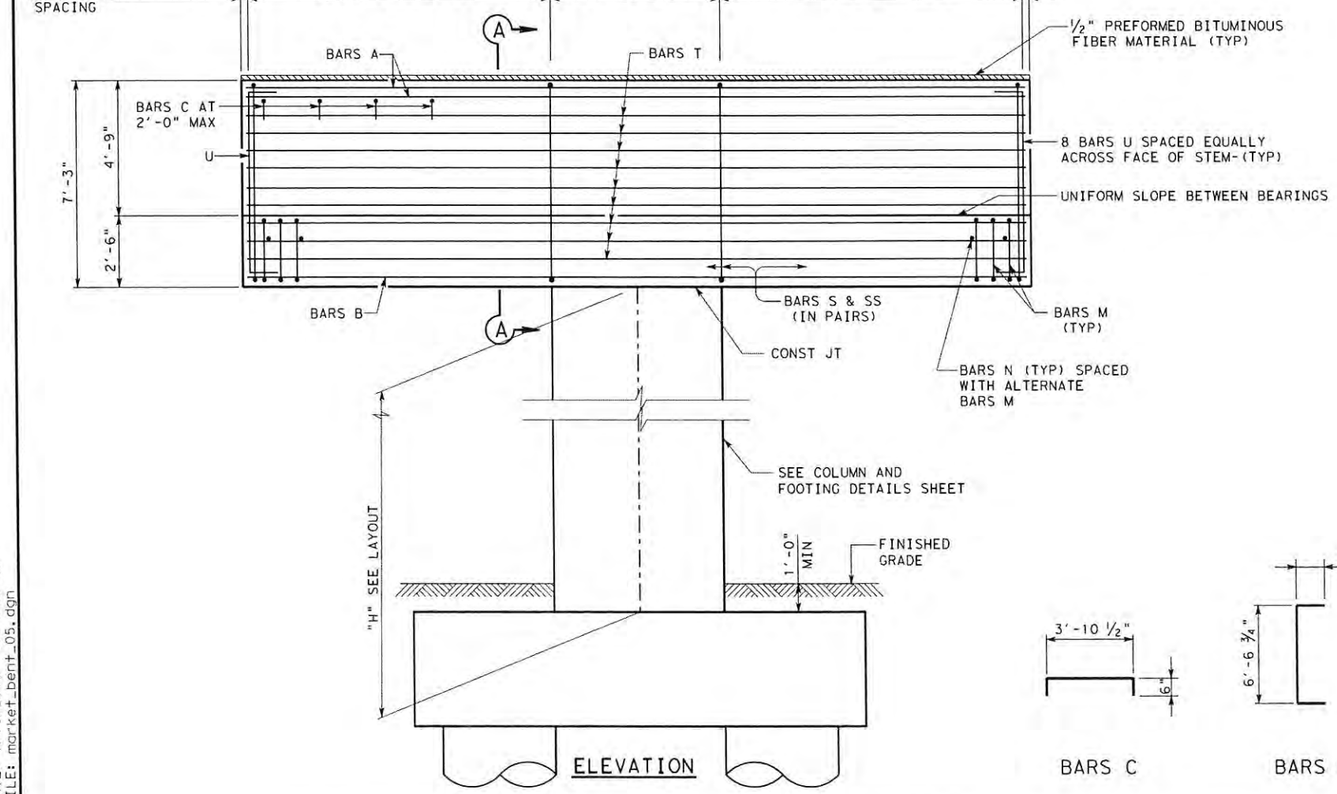


## ELEVATION

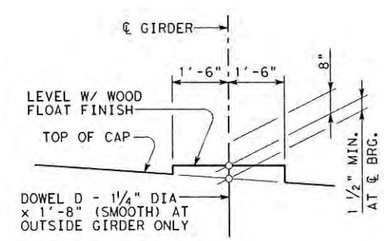


## BEARING SEAT DETAIL

(BEARING SURFACE MUST BE CLEAN AND FREE OF ALL LOOSE MATERIAL BEFORE PLACING BEARING PAD.)

(SEE MISCELLANEOUS BENT DETAILS SHEET FOR BEARING SEAT BUILD-UPS EXCEEDING 3")




BARS C

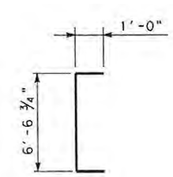


BARS U

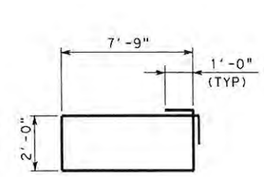


BARS M

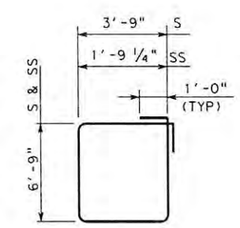


BARS S & SS

STATE OF TEXAS
DANIEL M. MORALES
100060
LICENSED
PROFESSIONAL ENGINEER

1-18-13

HL93 LOADING

| NO | REVISION | DRAWN | APPROVED | DATE |
|---|---|---|---|---|
| 1 | ADDENDUM NO. 2 | SZT | DMM | 1/18/13 |
| | | | | / / |
| | | | | / / |

URS 9901 IH10 WEST, SUITE 350 SAN ANTONIO, TEXAS 78230 (FIRM # 3162)
TEL: 210.377.3764 FAX: 210.377.0622 WWW.URSCORP.COM

SEA STRUCTURAL ENGINEERING ASSOCIATES, INC. CONSULTING ENGINEERS SAN ANTONIO, TEXAS TBPE REG. NO. F-199

CITY OF SAN ANTONIO
CAPITAL IMPROVEMENTS MANAGEMENT SERVICES DEPARTMENT

MARKET STREET REALIGNMENT
IH-37 SOUTHBOUND EXIT RAMP
INTERIOR BENT
NO. 5
PLAN, ELEVATION AND DETAILS

| | | | |
|---|---|---|---|
| 100% SUBMITTAL | PROJECT NO.: 40-00300 | | DATE: 1/16/2013 |
| DRWN. BY: SZT | DSGN. BY: NMB | CHKD. BY: DMM | SHEET NO.: 454 |

DATE: 1/16/2013 9:29:58 AM
FILE: market_bent_05.dgn

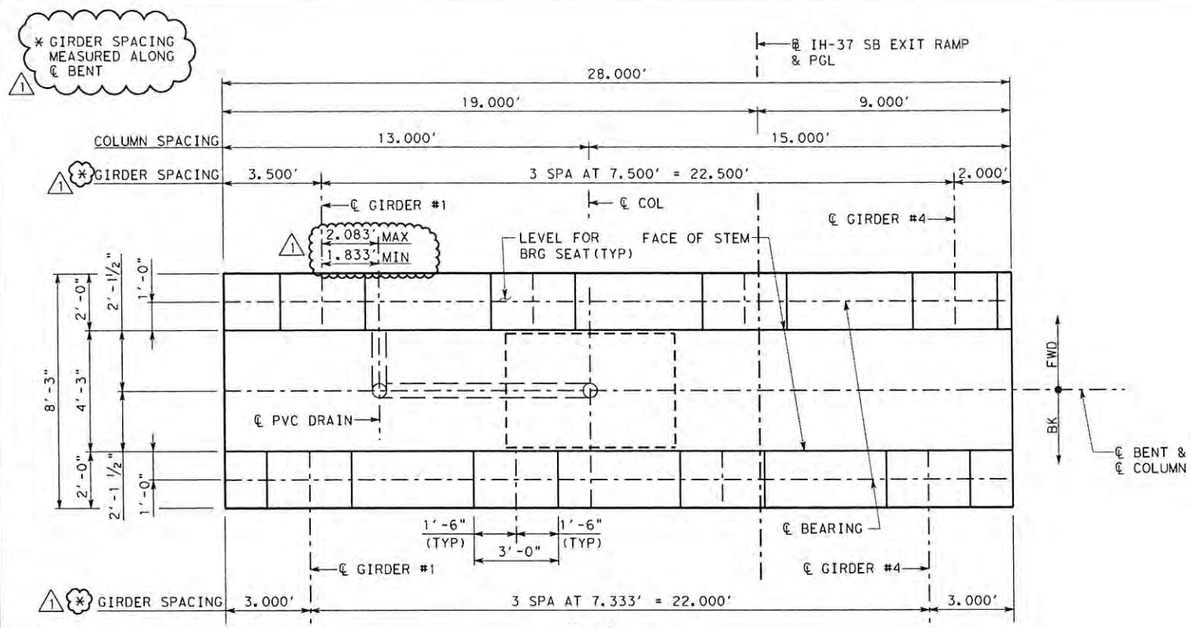


## PLAN

(LOOKING FORWARD STATION)

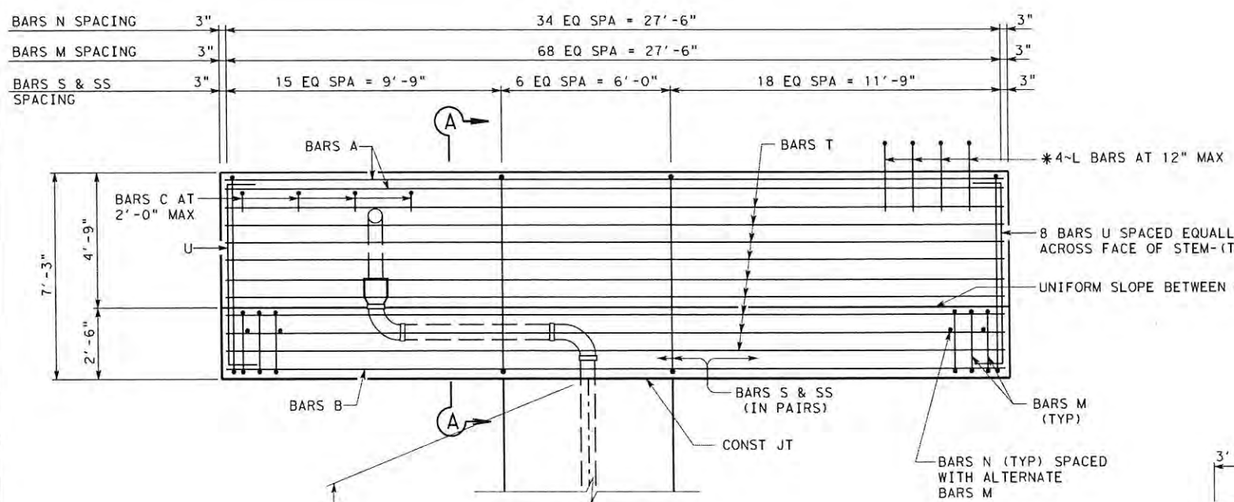


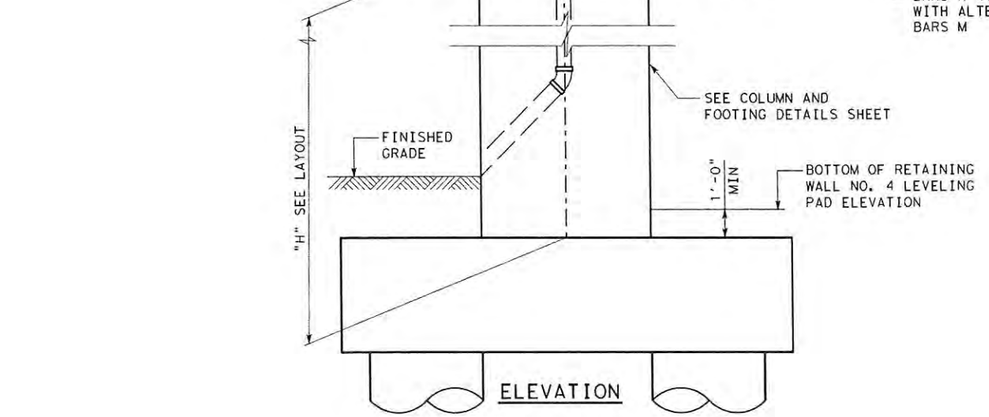


## ELEVATION

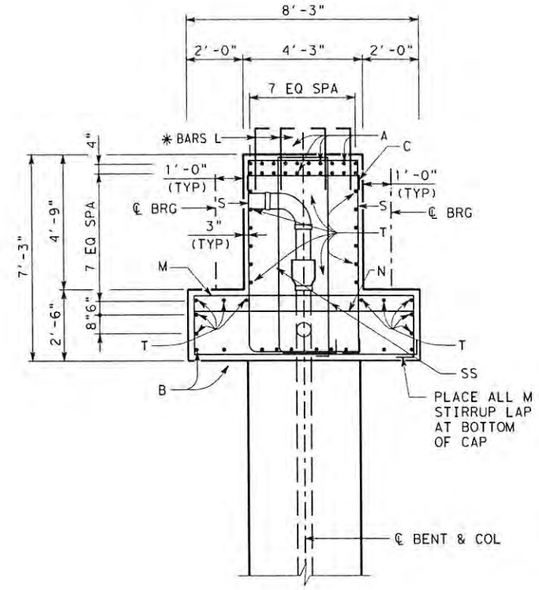


## SECTION A-A

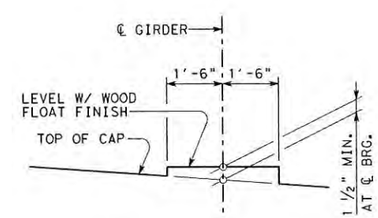


## BEARING SEAT DETAIL

(BEARING SURFACE MUST BE CLEAN AND FREE OF ALL LOOSE MATERIAL BEFORE PLACING BEARING PAD.)

(SEE MISCELLANEOUS BENT DETAILS SHEET FOR BEARING SEAT BUILD-UPS EXCEEDING 3")

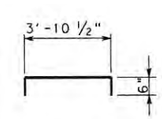


BARS C

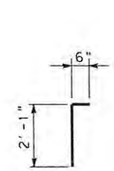


BARS L

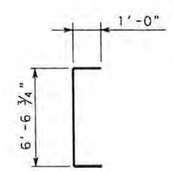


BARS U

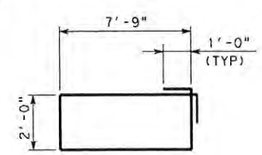


BARS M

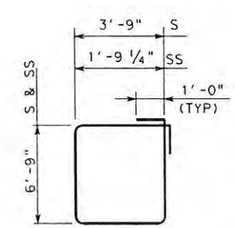


BARS S & SS

## TABLE OF ESTIMATED QUANTITIES

| BAR | NO. | SIZE | LENGTH | WEIGHT |
|---|---|---|---|---|
| A | 20 | #11 | 27'-8" | 2940 |
| B | 10 | #11 | 27'-8" | 1470 |
| C | 16 | #4 | 4'-11" | 53 |
| L | 116 | #4 | 2'-7" | 200 |
| M | 69 | #6 | 21'-6" | 2228 |
| N | 35 | #6 | 7'-11" | 416 |
| S | 40 | #6 | 23'-0" | 1382 |
| SS | 40 | #6 | 19'-1" | 1147 |
| T | 22 | #6 | 27'-8" | 914 |
| U | 16 | #5 | 8'-7" | 143 |
| | | | | |
| | | | | |
| ① REINFORCING STEEL | | | LB | 10,893 |
| CLASS "C" CONCRETE | | | CY | 42.5 |

① FOR CONTRACTOR'S INFORMATION ONLY

* SEE MISCELLANEOUS BENT DETAILS SHEET FOR REINFORCING DETAILS OVER THE TOP OF INVERTED T-CAP AT THE EXPANSION JOINT LOCATION.

## GENERAL NOTES

1. DESIGNED IN ACCORDANCE WITH AASHTO 2012 LRFD BRIDGE DESIGN SPECIFICATIONS FOR HL-93 LOADING.
2. CONCRETE STRENGTH f'c = 3600 psi
3. ALL REINFORCING STEEL SHALL BE GRADE 60.
4. CHAMFER ALL EXPOSED EDGES ¾" UNLESS OTHERWISE NOTED.
5. ADJUST SPACING OF BARS B AND T AS REQUIRED TO CLEAR DRAIN PIPE.

STATE OF TEXAS
DANIEL M. MORALES
100060
LICENSED PROFESSIONAL ENGINEER

1-18-13

HL93 LOADING

| NO | REVISION | DRAWN | APPROVED | DATE |
|---|---|---|---|---|
| 1 | ADDENDUM NO. 2 | SZT | DMM | 1/18/13 |
| | | | | / / |
| | | | | / / |

URS 9901 IH10 WEST, SUITE 350 SAN ANTONIO, TEXAS 78230 (FIRM # 31621)
TEL: 210.377.3764 FAX: 210.377.0622 WWW.URSCORP.COM

SEA STRUCTURAL ENGINEERING ASSOCIATES, INC. CONSULTING ENGINEERS SAN ANTONIO, TEXAS TBPE REG. NO. F-199

CITY OF SAN ANTONIO
CAPITAL IMPROVEMENTS MANAGEMENT SERVICES DEPARTMENT

MARKET STREET REALIGNMENT
IH-37 SOUTHBOUND EXIT RAMP
INTERIOR BENT
NO. 6
PLAN, ELEVATION AND DETAILS

| | | | |
|---|---|---|---|
| 100% SUBMITTAL | PROJECT NO.: 40-00300 | | DATE: 1/16/2013 |
| DRWN. BY: SZT | DSGN. BY: NMB | CHKD. BY: DMM | SHEET NO.: 455 |

DATE: 1/16/2013 1:52:48 PM
FILE: market_bent_06.dgn

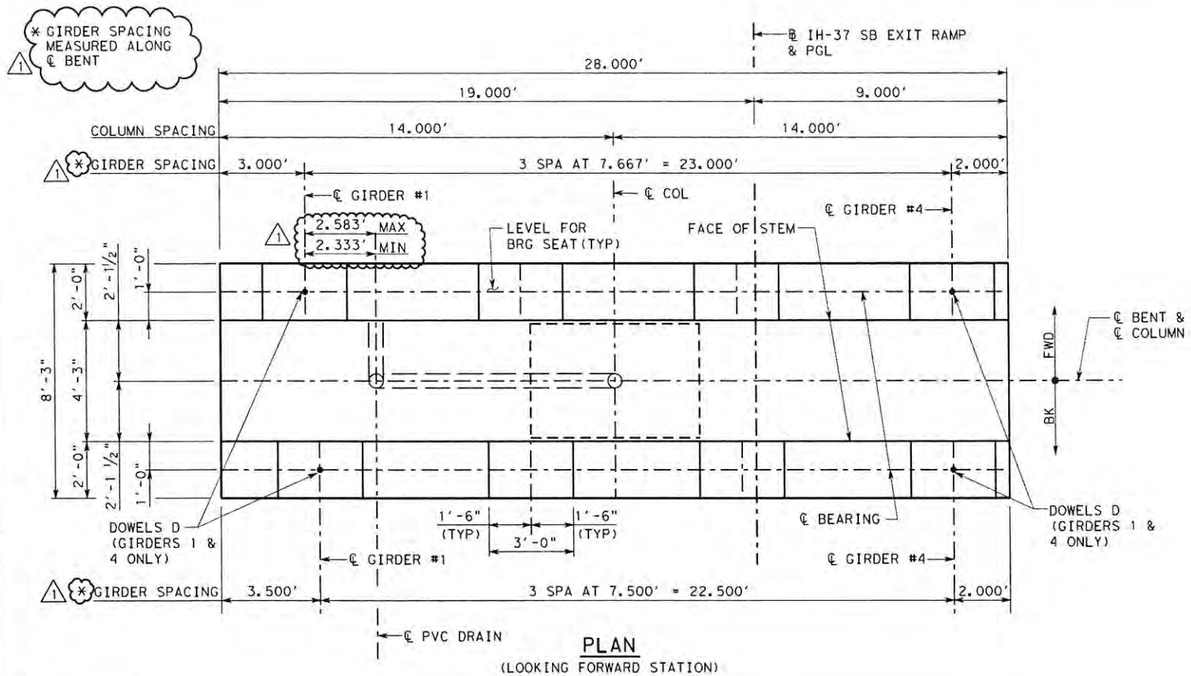


## PLAN

(LOOKING FORWARD STATION)

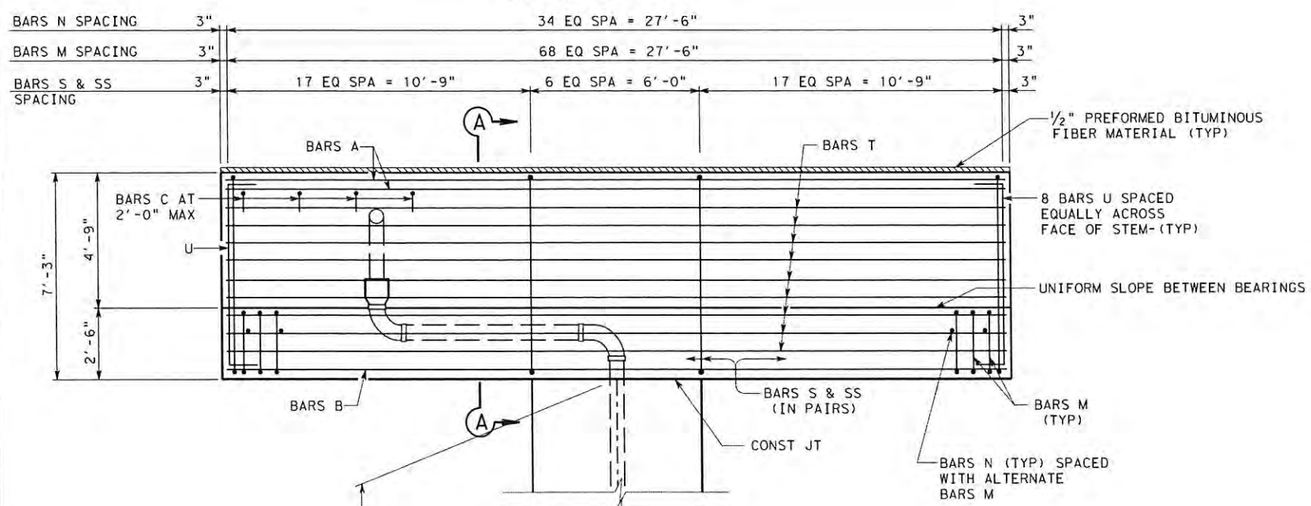


## ELEVATION

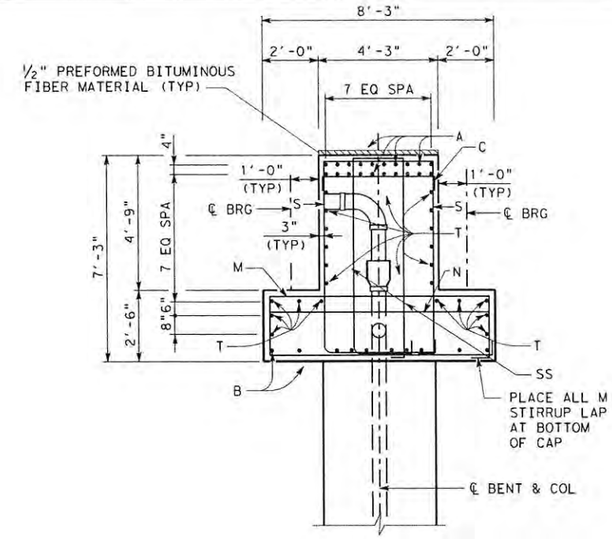


## SECTION A-A

| TABLE OF ESTIMATED QUANTITIES | | | | |
|---|---|---|---|---|
| BAR | NO. | SIZE | LENGTH | WEIGHT |
| A | 20 | #11 | 27'-8" | 2940 |
| B | 10 | #11 | 27'-8" | 1470 |
| C | 16 | #4 | 4'-11" | 53 |
| D | 4 | 1¼" D | 1'-8" | 28 |
| M | 69 | #6 | 21'-6" | 2228 |
| N | 35 | #6 | 7'-11" | 416 |
| S | 41 | #6 | 23'-0" | 1416 |
| SS | 41 | #6 | 19'-1" | 1175 |
| T | 22 | #6 | 27'-8" | 914 |
| U | 16 | #5 | 8'-7" | 143 |
| | | | | |
| | | | | |
| ① REINFORCING STEEL | | | Lb | 10,783 |
| CLASS "C" CONCRETE | | | CY | 42.7 |

① FOR CONTRACTOR'S INFORMATION ONLY

## GENERAL NOTES

1. DESIGNED IN ACCORDANCE WITH AASHTO 2012 LRFD BRIDGE DESIGN SPECIFICATIONS FOR HL-93 LOADING.
2. CONCRETE STRENGTH f'c = 3600 psi
3. ALL REINFORCING STEEL SHALL BE GRADE 60.
4. CHAMFER ALL EXPOSED EDGES ¾" UNLESS OTHERWISE NOTED.
5. ADJUST SPACING OF BARS B AND T AS REQUIRED TO CLEAR DRAIN PIPE.

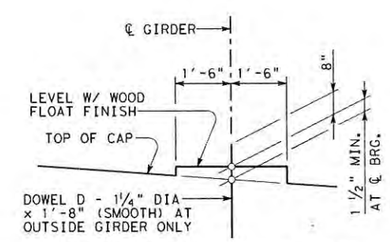


## BEARING SEAT DETAIL

(BEARING SURFACE MUST BE CLEAN AND FREE OF ALL LOOSE MATERIAL BEFORE PLACING BEARING PAD.)

(SEE MISCELLANEOUS BENT DETAILS SHEET FOR BEARING SEAT BUILD-UPS EXCEEDING 3")

STATE OF TEXAS
DANIEL M. MORALES
100060
LICENSED PROFESSIONAL ENGINEER

D.M.M.
1-18-13

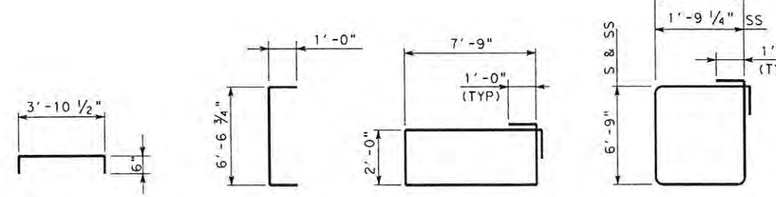


BARS C BARS U BARS M BARS S & SS

HL93 LOADING

| NO | REVISION | DRAWN | APPROVED | DATE |
|---|---|---|---|---|
| 1 | ADDENDUM NO. 2 | SZT | DMM | 1/18/13 |
| | | | | / / |
| | | | | / / |

URS 9901 IH10 WEST, SUITE 350 SAN ANTONIO, TEXAS 78230 (FIRM # 3162)
TEL: 210.377.3764 FAX: 210.377.0622 WWW.URSCORP.COM

SEA STRUCTURAL ENGINEERING ASSOCIATES, INC. CONSULTING ENGINEERS SAN ANTONIO, TEXAS TBPE REG. NO. F-199

CITY OF SAN ANTONIO
CAPITAL IMPROVEMENTS MANAGEMENT SERVICES DEPARTMENT

MARKET STREET REALIGNMENT
IH-37 SOUTHBOUND EXIT RAMP
INTERIOR BENT
NO. 7
PLAN, ELEVATION AND DETAILS

| 100% SUBMITTAL | PROJECT NO.: 40-00300 | | DATE: 1/16/2013 |
|---|---|---|---|
| DRWN. BY: SZT | DSGN. BY: NMB | CHKD. BY: DMM | SHEET NO.: 456 |

DATE: 1/16/2013 1:54:38 PM
FILE: market_bent_07.dgn

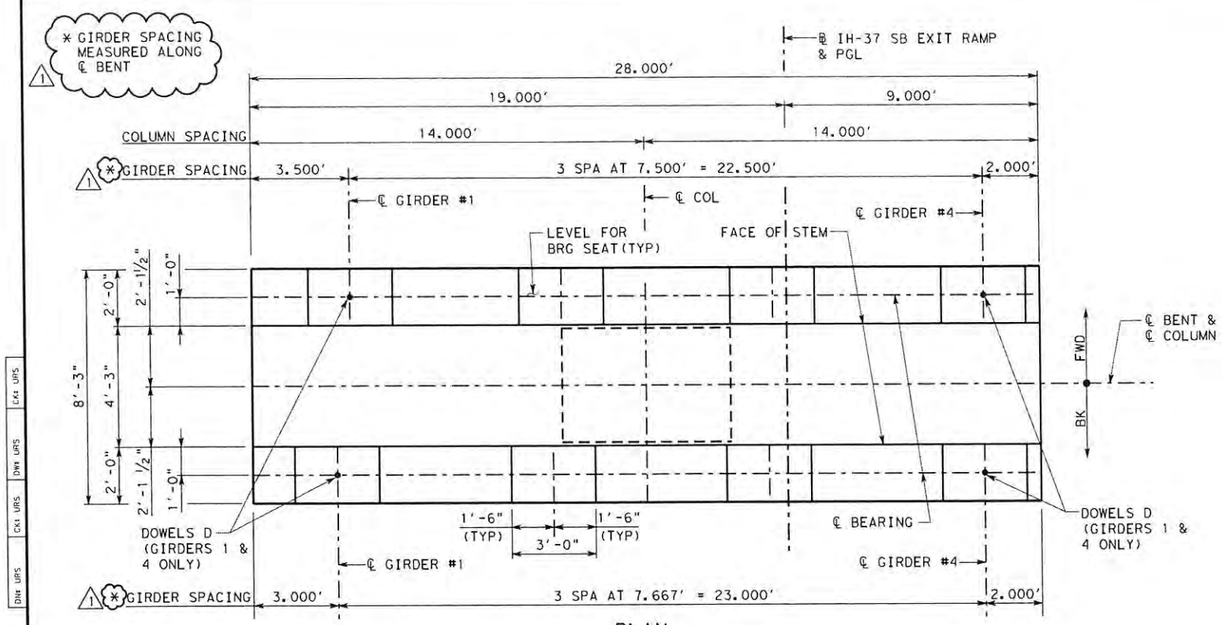


PLAN
(LOOKING FORWARD STATION)

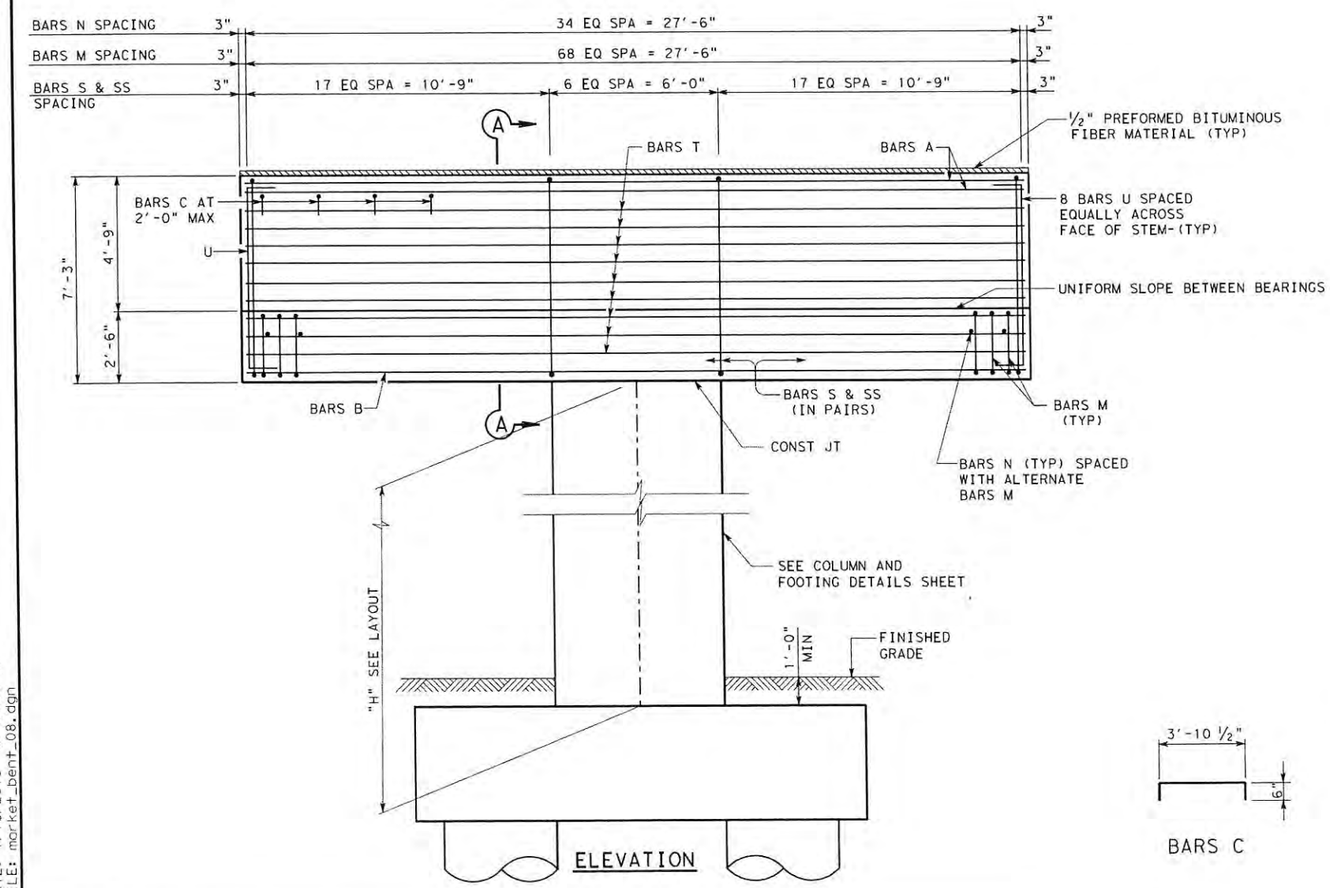


ELEVATION

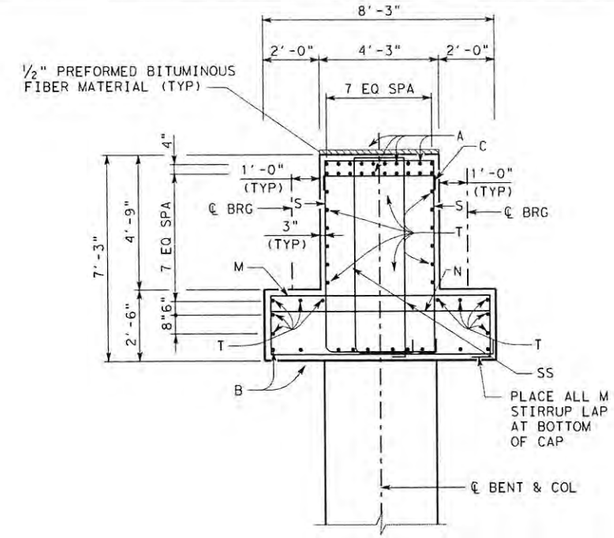


SECTION A-A

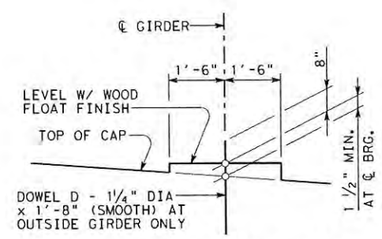


BEARING SEAT DETAIL

(BEARING SURFACE MUST BE CLEAN AND FREE OF ALL LOOSE MATERIAL BEFORE PLACING BEARING PAD.)

(SEE MISCELLANEOUS BENT DETAILS SHEET FOR BEARING SEAT BUILD-UPS EXCEEDING 3")

## TABLE OF ESTIMATED QUANTITIES

| BAR | NO. | SIZE | LENGTH | WEIGHT |
|---|---|---|---|---|
| A | 20 | #11 | 27'-8" | 2940 |
| B | 10 | #11 | 27'-8" | 1470 |
| C | 16 | #4 | 4'-11" | 53 |
| D | 4 | 1 1/4" D | 1'-8" | 28 |
| M | 69 | #6 | 21'-6" | 2228 |
| N | 35 | #6 | 7'-11" | 416 |
| S | 41 | #6 | 23'-0" | 1416 |
| SS | 41 | #6 | 19'-1" | 1175 |
| T | 22 | #6 | 27'-8" | 914 |
| U | 16 | #5 | 8'-7" | 143 |
| | | | | |
| | | | | |
| ① REINFORCING STEEL | | | Lb | 10,783 |
| CLASS "C" CONCRETE | | | CY | 42.9 |

① FOR CONTRACTOR'S INFORMATION ONLY

## GENERAL NOTES

1. DESIGNED IN ACCORDANCE WITH AASHTO 2012 LRFD BRIDGE DESIGN SPECIFICATIONS FOR HL-93 LOADING.
2. CONCRETE STRENGTH f'c = 3600 psi
3. ALL REINFORCING STEEL SHALL BE GRADE 60.
4. CHAMFER ALL EXPOSED EDGES 3/4" UNLESS OTHERWISE NOTED.




BARS C BARS U BARS M BARS S & SS

STATE OF TEXAS
DANIEL M. MORALES
100060
LICENSED PROFESSIONAL ENGINEER

1-18-13

HL93 LOADING

| NO | REVISION | DRAWN | APPROVED | DATE |
|---|---|---|---|---|
| 1 | ADDENDUM NO. 2 | SZT | DMM | 1/18/13 |
| | | | | / / |
| | | | | / / |

URS 9901 IH10 WEST, SUITE 350 SAN ANTONIO, TEXAS 78230 (FIRM # 31621)
TEL: 210.377.3764 FAX: 210.377.0622 WWW.URSCORP.COM

SEA STRUCTURAL ENGINEERING ASSOCIATES, INC. CONSULTING ENGINEERS SAN ANTONIO, TEXAS TBPE REG. NO. F-199

CITY OF SAN ANTONIO
CAPITAL IMPROVEMENTS MANAGEMENT SERVICES DEPARTMENT

MARKET STREET REALIGNMENT
IH-37 SOUTHBOUND EXIT RAMP
INTERIOR BENT
NO. 8
PLAN, ELEVATION AND DETAILS

| 100% SUBMITTAL | PROJECT NO.: 40-00300 | | DATE: 1/16/2013 |
|---|---|---|---|
| DRWN. BY: SZT | DSGN. BY: NMB | CHKD. BY: DMM | SHEET NO.: 457 |

DATE: 1/16/2013 9:40:20 AM
FILE: market_bent_08.dgn

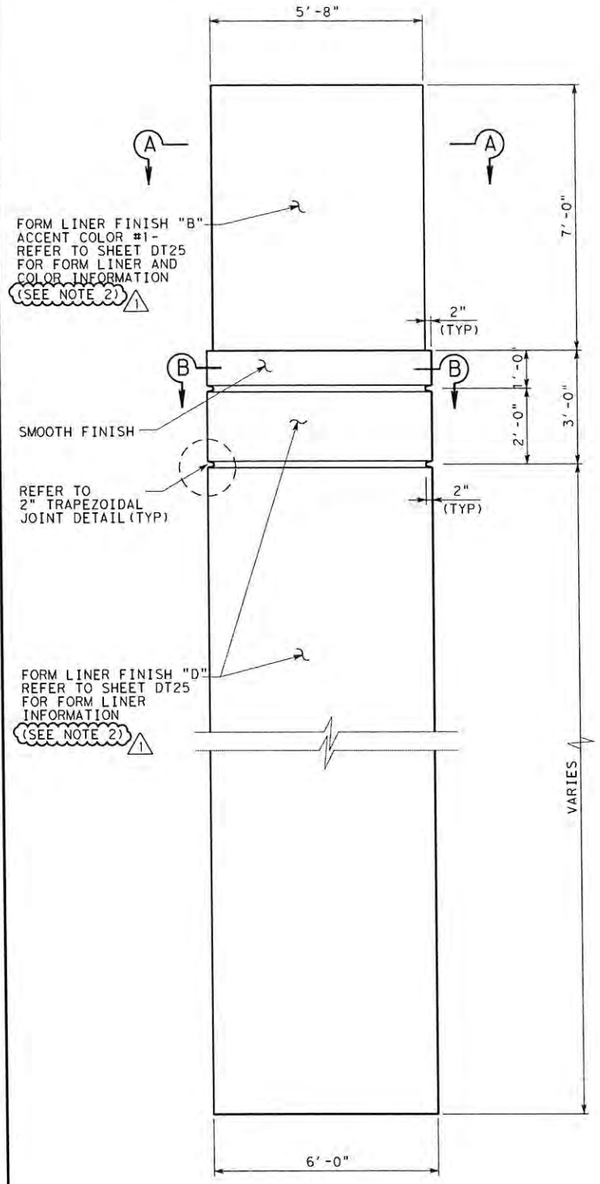


COLUMN AESTHETIC ELEVATION

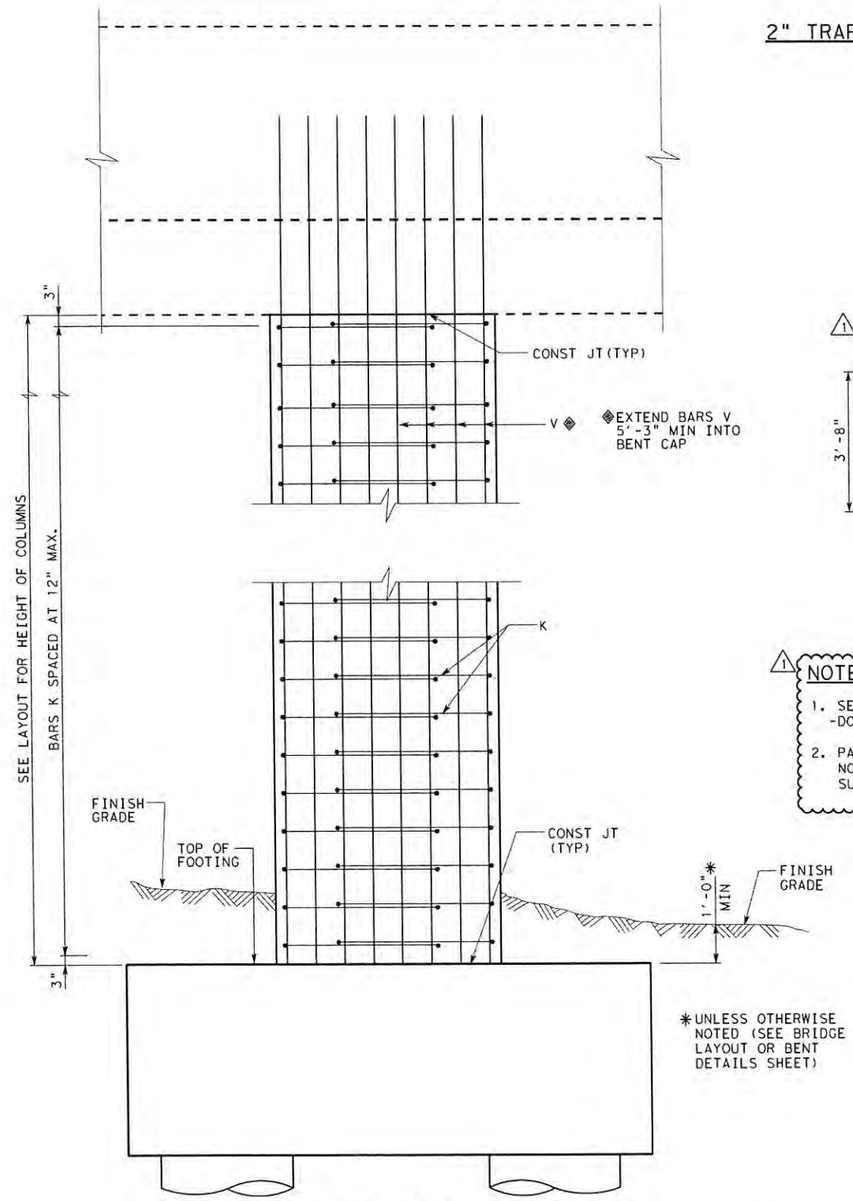


ELEVATION

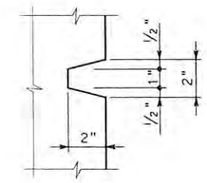


2" TRAPEZOIDAL JOINT DETAIL

① TABLE OF ESTIMATED QUANTITIES FOR ONE COLUMN

| "H" | 30~BARS V #11 | | BARS K #5 x 14'-8" | | REINF③ STL① | CL "C" CONC (COL) |
|---|---|---|---|---|---|---|
| FT | LENGTH | WEIGHT | NO. | WEIGHT | LBS | CY |
| ② 8 | 13'-3" | 2112 | 18 | 275 | 2387 | 6.2 |
| 16 | 21'-3" | 3387 | 34 | 520 | 3907 | 13.4 |
| 18 | 23'-3" | 3706 | 38 | 581 | 4287 | 15.2 |
| 21 | 26'-3" | 4184 | 44 | 673 | 4857 | 17.9 |
| 26 | 31'-3" | 4981 | 54 | 826 | 5807 | 22.3 |

① ADJUST BARS V LENGTH BY 1 FT. AND BARS K NO. BY 2 FOR EACH LINEAR FOOT OF VARIATION IN "H" VALUE. ADJUST REINFORCING STEEL TOTAL BY 192 LB AND CLASS "C" CONCRETE BY 0.9 CY FOR EACH LINEAR FOOT OF VARIATION "H" VALUE.

② NO AESTHETIC TREATMENT SHALL BE USED ON BENT NO. 8, THEREFORE USE THE DIMENSION ON SECTION A-A FOR THIS COLUMN.

1 ③ FOR CONTRACTOR'S INFORMATION ONLY.

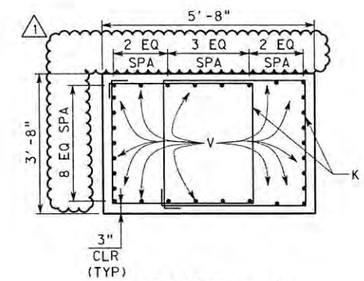


SECTION A-A

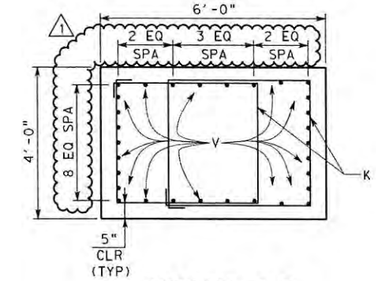


SECTION B-B

1 NOTE:

1. SEE SAN ANTONIO DISTRICT AESTHETIC GUIDELINES -DOWNTOWN REGION - FOR AESTHETIC DETAILS.
2. PAYMENT FOR THE FORM LINERS AND COLOR COATING WILL NOT BE PAID FOR DIRECTLY, BUT WILL BE CONSIDERED SUBSIDIARY TO THE PERTINENT ITEMS OF WORK.

STATE OF TEXAS
DANIEL M. MORALES
100060
LICENSED
PROFESSIONAL ENGINEER

DMM
1-18-13

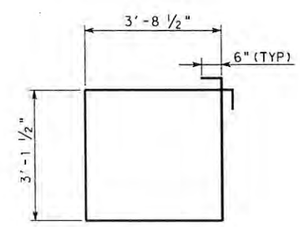


BARS K

HL93 LOADING

| NO | REVISION | DRAWN | APPROVED | DATE |
|---|---|---|---|---|
| 1 | ADDENDUM NO. 2 | SZT | DMM | 1/18/13 |
| | | | | / / |
| | | | | / / |

URS 9901 IH10 WEST, SUITE 350 SAN ANTONIO, TEXAS 78230 (FIRM # 3162)
TEL: 210.377.3764 FAX: 210.377.0622 WWW.URSCORP.COM

SEA STRUCTURAL ENGINEERING ASSOCIATES, INC. CONSULTING ENGINEERS SAN ANTONIO, TEXAS TBPE REG. NO. F-199

CITY OF SAN ANTONIO
CAPITAL IMPROVEMENTS MANAGEMENT SERVICES DEPARTMENT

MARKET STREET REALIGNMENT
IH-37 SOUTHBOUND EXIT RAMP

COLUMN AND FOOTING DETAILS

SHEET 1 OF 2

| 100% SUBMITTAL | PROJECT NO.: 40-00300 | | DATE: 1/16/2013 |
|---|---|---|---|
| DRWN. BY: SZT | DSGN. BY: NMB | CHKD. BY: DMM | SHEET NO.: 458 |

DATE: 1/16/2013 9:04:02 AM
FILE: market_footing_01.dgn

## TABLE OF ESTIMATED QUANTITIES (FOR ONE FOOTING ONLY)

| BAR | NO. | SIZE | LENGTH | WEIGHT |
|---|---|---|---|---|
| F1 | 20 | #10 | 15'-8" | 1,348 |
| F2 | 10 | #8 | 15'-8" | 418 |
| F3 | 20 | #10 | 15'-8" | 1,348 |
| FD | 30 | #11 | 15'-6" | 2,471 |
| FS | 22 | #6 | 21'-9" | 719 |
| C | 18 | #4 | 6'-8" | 81 |
| | | | | |
| REINFORCING STEEL ③ | | | LB | 6,385 |
| CLASS "C" CONCRETE (FTG.) | | | CY | 17.8 |
| TEMPORARY SPECIAL SHORING | | | SF | 350 |
| TEMPORARY SPECIAL SHORING ④ | | | SF | 731 |

③ FOR CONTRACTOR'S INFORMATION ONLY
④ FOR BENT NO.6 FOOTING ONLY

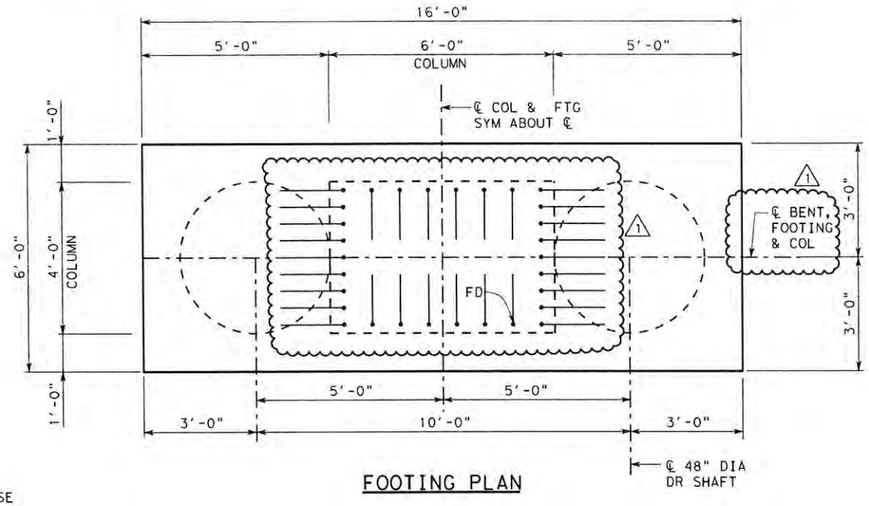


FOOTING PLAN

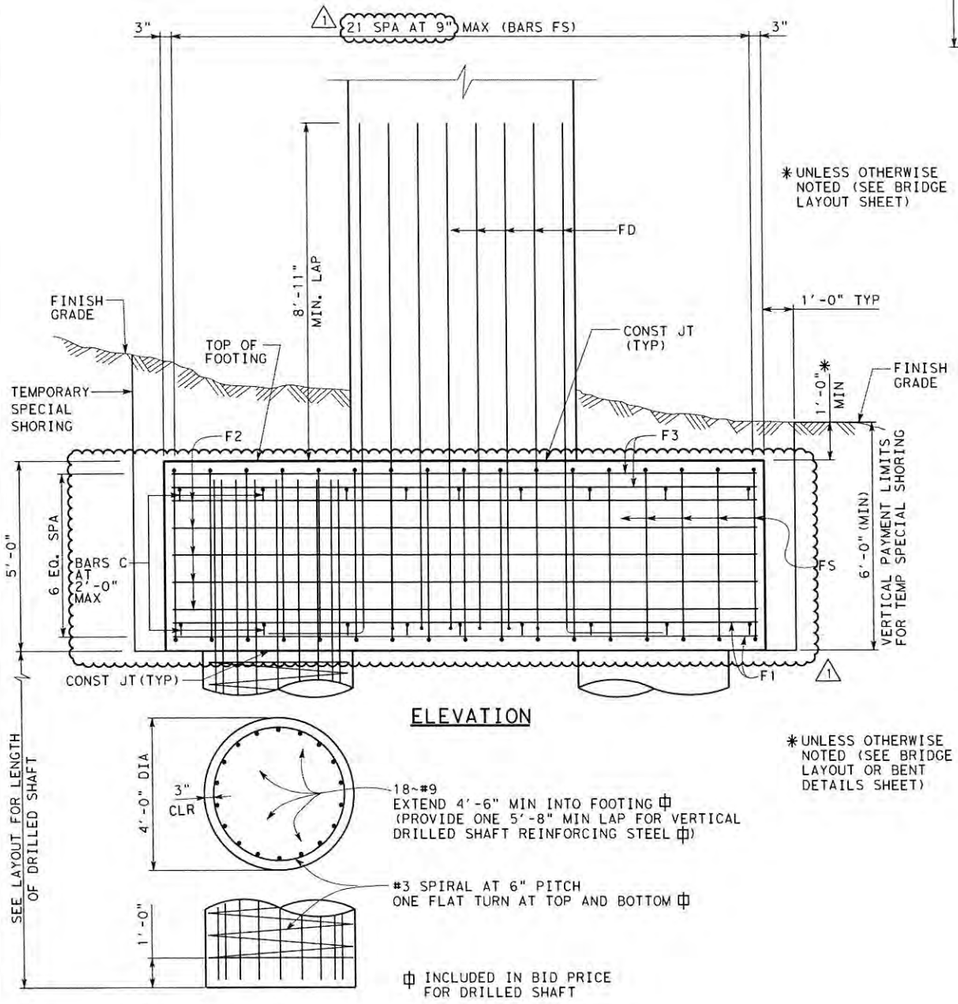


ELEVATION

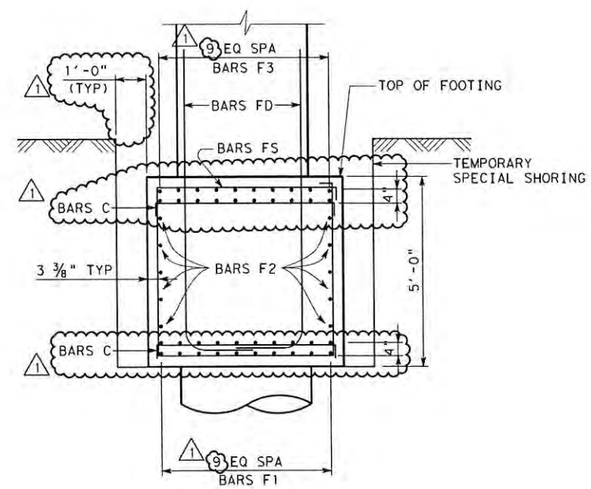


SECTION

## GENERAL NOTES

1. DESIGNED IN ACCORDANCE WITH AASHTO 2012 LRFD BRIDGE DESIGN SPECIFICATIONS FOR HL-93 LOADING.
2. CONCRETE STRENGTH f'c = 3600 psi
3. ALL FOOTING & COLUMN REINFORCING STEEL SHALL BE GRADE 60.
4. CALCULATED FOUNDATION LOAD = 590 TONS/SHAFT.

STATE OF TEXAS
DANIEL M. MORALES
100060
LICENSED PROFESSIONAL ENGINEER

1-18-13

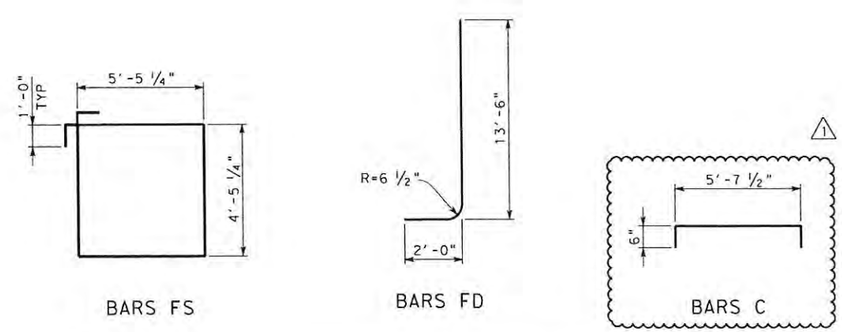


BARS FS  BARS FD  BARS C

HL93 LOADING

| NO | REVISION | DRAWN | APPROVED | DATE |
|---|---|---|---|---|
| 1 | ADDENDUM NO. 2 | SZT | DMM | 1/18/13 |
| | | | | / / |
| | | | | / / |


URS 9901 IH10 WEST, SUITE 350 SAN ANTONIO, TEXAS 78230 (FIRM # 3162)
TEL: 210.377.3764 FAX: 210.377.0622 WWW.URSCORP.COM

SEA STRUCTURAL ENGINEERING ASSOCIATES, INC. CONSULTING ENGINEERS SAN ANTONIO, TEXAS TBPE REG. NO. F-199


CITY OF SAN ANTONIO
CAPITAL IMPROVEMENTS MANAGEMENT SERVICES DEPARTMENT

MARKET STREET REALIGNMENT
IH-37 SOUTHBOUND EXIT RAMP

# COLUMN AND FOOTING DETAILS

SHEET 2 OF 2

| 100% SUBMITTAL | PROJECT NO.: 40-00300 | | DATE: 1/16/2013 |
|---|---|---|---|
| DRWN. BY: SZT | DSGN. BY: NVB | CHKD. BY: DMM | SHEET NO.: 459 |

DATE: 1/16/2013 10:34:35 AM
FILE: market_footing_02.dgn

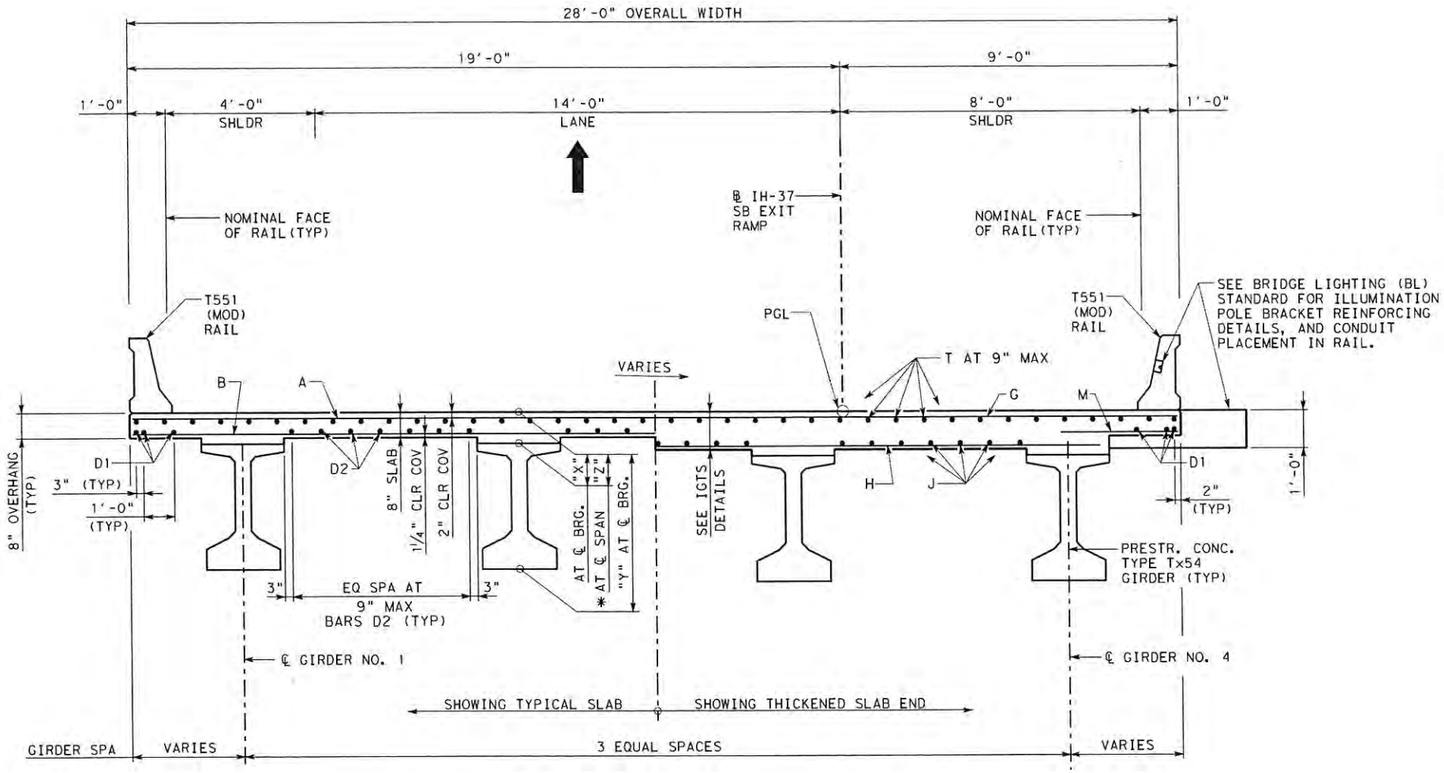


TYPICAL TRANSVERSE SECTION

## TABLE OF SECTION DEPTHS

| SPAN NO. | GIRDER NO. | "X" AT ℄ BRG | "Y" AT ℄ BRG | "Z" AT ℄ SPAN * |
|---|---|---|---|---|
| 1 | 1 | 11" | 5'-5" | 10" |
| 1 | 2 | 11" | 5'-5" | 10 ⅛" |
| 1 | 3 | 11" | 5'-5" | 10 ¼" |
| 1 | 4 | 11" | 5'-5" | 10 ⅜" |
| 2 | 1 | 13 ¾" | 5'-7 ¾" | 10 ⅜" |
| 2 | 2 | 13 ¾" | 5'-7 ¾" | 10 ¼" |
| 2 | 3 | 13 ¾" | 5'-7 ¾" | 10" |
| 2 | 4 | 13 ¾" | 5'-7 ¾" | 9 ¼" |

1 1

* THEORETICAL DIMENSION

NOTE:
SEE IGMS STANDARD FOR HAUNCH REINFORCING DETAIL WHEN HAUNCH DEPTH IS GREATER THAN 3 ½".

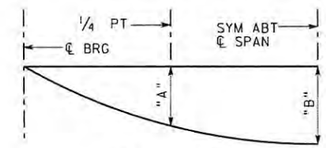


## DEAD LOAD DEFLECTION DIAGRAM

CALCULATED DEFLECTIONS SHOWN ARE DUE TO THE CONCRETE SLAB ON INTERIOR GIRDERS ONLY (Ec = 5000 ksi). ADJUST VALUES AS REQUIRED FOR EXTERIOR GIRDERS AND IF OPTIONAL SLAB FORMING IS USED. THESE VALUES MAY REQUIRE FIELD VERIFICATION.

| SPAN NO. | GIRDER NO. | "A" | "B" |
|---|---|---|---|
| 1 | 1 & 4 | -0.020' | -0.028' |
| 1 | 2 & 3 | -0.022' | -0.031' |
| 2 | 1 | -0.104' | -0.146' |
| 2 | 2 | -0.120' | -0.169' |
| 2 | 3 | -0.119' | -0.167' |
| 2 | 4 | -0.093' | -0.131' |

## TABLE OF ESTIMATED QUANTITIES

| SPAN | REINF CONCRETE SLAB | PRESTRESSED CONCRETE GIRDER (1) TYPE Tx54 |
|---|---|---|
| NO. | SF | FT |
| 1 | 2,249 | 310.72 |
| 2 | 3,395 | 466.10 |
| | | |
| TOTAL | 5,644 | 776.82 |

| | | | |
|---|---|---|---|
| (3) | CLASS "S" CONCRETE | CY | 163 1 |
| (2) | TOTAL REINF STEEL (3) | LB | 36,686 |

(1) GIRDER LENGTHS SHOWN ARE BOTTOM GIRDER FLANGE LENGTHS WITH ADJUSTMENT MADE FOR GIRDER SLOPE.

(2) REINFORCING STEEL WEIGHT IS CALCULATED USING AN APPROXIMATE FACTOR OF 6.5 LB/FT².

(3) FOR CONTRACTOR'S INFORMATION ONLY.

## BAR TABLE

| BAR | SIZE |
|---|---|
| A | #5 |
| B | #5 |
| D1 | #5 |
| D2 | #5 |
| G | #5 |
| H | #5 |
| J | #5 |
| M | #5 |
| T | #4 |
| | |

STATE OF TEXAS
DANIEL M. MORALES
100060
LICENSED PROFESSIONAL ENGINEER

D.M.M.G
1-18-13

HL93 LOADING

| NO | REVISION | DRAWN | APPROVED | DATE |
|---|---|---|---|---|
| 1 | ADDENDUM NO. 2 | SZT | NMB | 1/18/13 |
| | | | | / / |
| | | | | / / |

URS 9901 IH10 WEST, SUITE 350 SAN ANTONIO, TEXAS 78230 (FIRM # 3162)
TEL: 210.377.3764 FAX: 210.377.0622 WWW.URSCORP.COM

SEA STRUCTURAL ENGINEERING ASSOCIATES, INC. CONSULTING ENGINEERS SAN ANTONIO, TEXAS TBPE REG. NO. F-199

CITY OF SAN ANTONIO
CAPITAL IMPROVEMENTS MANAGEMENT SERVICES DEPARTMENT

MARKET STREET REALIGNMENT
IH-37 SOUTHBOUND EXIT RAMP
201.30' PRESTR CONC GIRDER UNIT 1

SHEET 2 OF 2

| | | | |
|---|---|---|---|
| 100% SUBMITTAL | PROJECT NO.: 40-00300 | | DATE: 1/15/2013 |
| DRWN. BY: SZT | DSGN. BY: NMB | CHKD. BY: DMM | SHEET NO.: 464 |

DATE: 1/15/2013 12:07:04 PM
FILE: market_pcqu_02.dgn

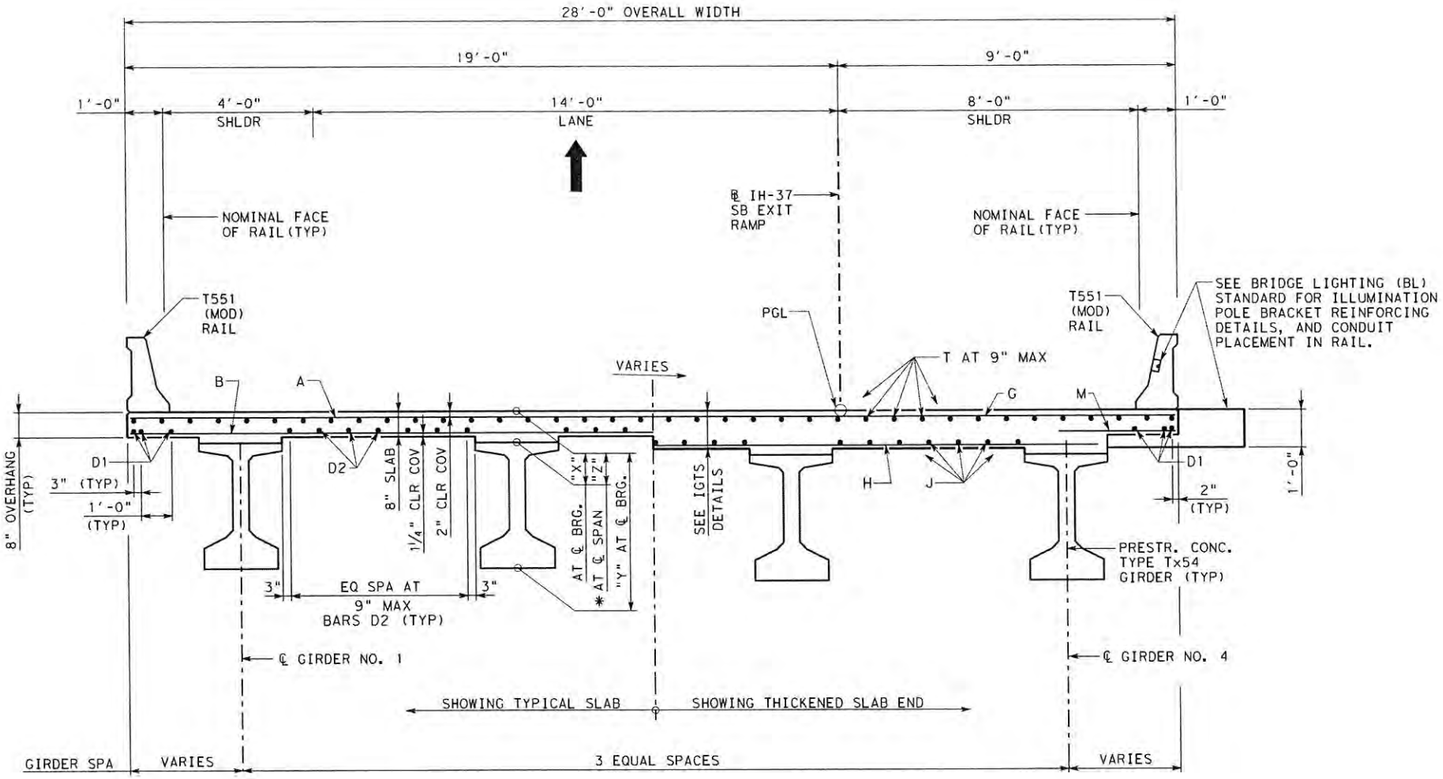


TYPICAL TRANSVERSE SECTION

## TABLE OF SECTION DEPTHS

| SPAN NO. | GIRDER NO. | "X" AT ℄ BRG | "Y" AT ℄ BRG | "Z" AT ℄ SPAN * |
|---|---|---|---|---|
| 3 | 1 | 11" | 5'-5" | 10 ½" |
| 3 | 2 & 3 | 11" | 5'-5" | 10 ⅝" |
| 3 | 4 | 11" | 5'-5" | 10 ¼" |
| 4 | 1 | 11" | 5'-5" | 12" |
| 4 | 2 | 11" | 5'-5" | 11 ⅝" |
| 4 | 3 | 11" | 5'-5" | 11 ¼" |
| 4 | 4 | 11" | 5'-5" | 10 ¾" |
| 5 | 1-4 | 11" | 5'-5" | 11 ⅜" |

1

*THEORETICAL DIMENSION

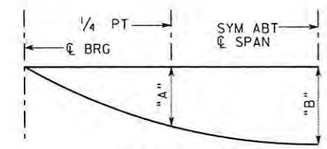


## DEAD LOAD DEFLECTION DIAGRAM

CALCULATED DEFLECTIONS SHOWN ARE DUE TO THE CONCRETE SLAB ON INTERIOR GIRDERS ONLY (Ec = 5000 ksi). ADJUST VALUES AS REQUIRED FOR EXTERIOR GIRDERS AND IF OPTIONAL SLAB FORMING IS USED. THESE VALUES MAY REQUIRE FIELD VERIFICATION.

| SPAN NO. | GIRDER NO. | "A" | "B" |
|---|---|---|---|
| 3 | 1 | -0.106' | -0.149' |
| 3 | 2 | -0.121' | -0.170' |
| 3 | 3 | -0.119' | -0.167' |
| 3 | 4 | -0.092' | -0.129' |
| 4 | 1-3 | -0.051' | -0.072' |
| 4 | 4 | -0.041' | -0.058' |
| 5 | 1-3 | -0.056' | -0.078' |
| 5 | 4 | -0.046' | -0.065' |

## TABLE OF ESTIMATED QUANTITIES

| SPAN | REINF CONCRETE SLAB | PRESTRESSED CONCRETE GIRDER (1) TYPE Tx54 |
|---|---|---|
| NO. | SF | FT |
| 3 | 3,397 | 466.38 |
| 4 | 2,807 | 382.00 |
| 5 | 2,861 | 389.77 |
| TOTAL | 9,065 | 1,238.15 |

| | | | |
|---|---|---|---|
| (3) | CLASS "S" CONCRETE | CY | 262 |
| (2) | TOTAL REINF STEEL (3) | LB | 58,923 |

(1) GIRDER LENGTHS SHOWN ARE BOTTOM GIRDER FLANGE LENGTHS WITH ADJUSTMENT MADE FOR GIRDER SLOPE.

(2) REINFORCING STEEL WEIGHT IS CALCULATED USING AN APPROXIMATE FACTOR OF 6.5 LB/FT².

(3) FOR CONTRACTOR'S INFORMATION ONLY.

## BAR TABLE

| BAR | SIZE |
|---|---|
| A | #5 |
| B | #5 |
| D1 | #5 |
| D2 | #5 |
| G | #5 |
| H | #5 |
| J | #5 |
| M | #5 |
| T | #4 |
| | |

STATE OF TEXAS
DANIEL M. MORALES
100060
LICENSED
PROFESSIONAL ENGINEER

1-18-13

HL93 LOADING

| NO | REVISION | DRAWN | APPROVED | DATE |
|---|---|---|---|---|
| 1 | ADDENDUM NO. 2 | SZT | DMM | 1/18/13 |
| | | | | / / |
| | | | | / / |

URS 9901 IH10 WEST, SUITE 350 SAN ANTONIO, TEXAS 78230 (FIRM # 3162)
TEL: 210.377.3764 FAX: 210.377.0622 WWW.URSCORP.COM

SEA STRUCTURAL ENGINEERING ASSOCIATES, INC. CONSULTING ENGINEERS SAN ANTONIO, TEXAS TBPE REG. NO. F-199

CITY OF SAN ANTONIO
CAPITAL IMPROVEMENTS MANAGEMENT SERVICES DEPARTMENT

MARKET STREET REALIGNMENT
IH-37 SOUTHBOUND EXIT RAMP
323.00' PRESTR CONC GIRDER UNIT 2

SHEET 2 OF 2

| | | | |
|---|---|---|---|
| 100% SUBMITTAL | PROJECT NO.: 40-00300 | | DATE: 1/15/2013 |
| DRWN. BY: SZT | DSGN. BY: NMB | CHKD. BY: DMM | SHEET NO.: 466 |

DATE: 1/15/2013 12:12:05 PM
FILE: market_pcgu_04.dgn