LOC/jlf
2/18/16
Item No. 13

AN ORDINANCE 2016-02-18-0102

ACCEPTING THE OFFER FROM FRENCH ELLISON TRUCK CENTER TO PROVIDE TWO REPLACEMENT AND TWO ADDITIONAL TURNKEY CAB OVER SPRAY POTHOLE PATCH TRUCKS FOR THE CITY'S TRANSPORTATION AND CAPITAL IMPROVEMENTS DEPARTMENT FOR A TOTAL COST OF $867,512.00, FUNDED FROM THE EQUIPMENT RENEWAL AND REPLACEMENT FUND AND THE TRANSPORTATION AND CAPITAL IMPROVEMENTS GENERAL FUND.

* * * * *

WHEREAS, an offer was submitted by French Ellison Truck Center to provide the City of San Antonio Transportation and Capital Improvements Department with four turnkey cab over spray pothole patch trucks for a total cost of $867,512.00, using the Houston-Galveston Area Council contract #HT06-14; and

WHEREAS, this purchase meets the requirements under the terms of the Houston/Galveston Area Council of Governments Cooperative Purchasing Agreement adopted by the City of San Antonio on October 10, 1996 through Resolution No. 96-41-48; **NOW THEREFORE:**

BE IT ORDAINED BY THE CITY COUNCIL OF THE CITY OF SAN ANTONIO:

SECTION 1. The offer from French Ellison Truck Center to provide the City of San Antonio Transportation and Capital Improvements Department with four turnkey cab over spray pothole patch trucks for a total cost of $867,512.00 is hereby accepted, subject to and contingent upon the deposit of all required bonds, performance deposits, insurance certificates and endorsements. A copy of the bid tabulation sheet and contract are attached hereto and incorporated herein for all purposes as **Exhibit I.**

SECTION 2. Funding in the amount of $433,006.00 for this ordinance is available in Fund 72001000, Cost Center 3503200001 and General Ledger 5501055 as part of the Fiscal Year 2016 Budget. Funding in the amount of $750.00 for this ordinance is available in Fund 72001000, Cost Center 3503200001 and General Ledger 5201040 as part of the Fiscal Year 2016 Budget.

SECTION 3. Funding in the amount of $433,006.00 for this ordinance is available in Fund 11001000, Cost Center 2303070002 and General Ledger 5501055 as part of the Fiscal Year 2016 Budget and Fiscal Year 2015 authorized carry forward. Funding in the amount of $750.00 for this ordinance is available in Fund 11001000, Cost Center 2303070002 and General Ledger 5201040 as part of the Fiscal Year 2016 Budget.

SECTION 4. Payment not to exceed $867,512.00 is authorized to French Ellison Truck Center, and should be encumbered with a purchase order.

SECTION 5. The financial allocations in this Ordinance are subject to approval by the Director of Finance, City of San Antonio. The Director of Finance may, subject to concurrence by the City Manager or the City Manager's designee, correct allocations to specific SAP Fund Numbers, SAP Project Definitions, SAP WBS Elements, SAP Internal Orders, SAP Fund Centers, SAP Cost Centers, SAP Functional Areas, SAP Funds Reservation Document Numbers and SAP GL Accounts as necessary to carry out the purpose of this Ordinance.

SECTION 6. This ordinance is effective immediately upon passage by eight affirmative votes; otherwise it is effective on the tenth day after passage.

PASSED AND APPROVED this 18th day of February, 2016.

M A Y O R
Ivy R. Taylor

ATTEST:

Leticia M. Vacek, City Clerk

APPROVED AS TO FORM:

Martha G. Sepeda, Acting City Attorney

Agenda Item:	**13 (in consent vote: 5, 6, 7, 8, 9, 10, 11, 12, 13, 15, 16, 17, 18, 19, 20, 21, 22, 23, 24, 26, 27, 28, 30A, 30C, 30D, 30E, 30F)**
Date:	02/18/2016
Time:	10:40:05 AM
Vote Type:	Motion to Approve
Description:	An Ordinance accepting the offer from French Ellison Truck Center to provide two replacement and two additional turnkey cab over spray pothole patch trucks for the City's Transportation and Capital Improvements Department for a total cost of $867,512.00, funded from the Equipment Renewal and Replacement Fund and the Transportation and Capital Improvements General Fund. [Ben Gorzell, Chief Financial Officer; Troy Elliott, Director, Finance]
Result:	Passed

Voter	Group	Not Present	Yea	Nay	Abstain	Motion	Second
Ivy R. Taylor	Mayor		x				
Roberto C. Treviño	District 1		x				x
Alan Warrick	District 2		x			x	
Rebecca Viagran	District 3		x				
Rey Saldaña	District 4		x				
Shirley Gonzales	District 5	x					
Ray Lopez	District 6		x				
Cris Medina	District 7		x				
Ron Nirenberg	District 8		x				
Joe Krier	District 9		x				
Michael Gallagher	District 10		x				

Exhibit I

City of San Antonio Bid Tabulation

Opened:	December 23, 2015		
For:	Cab Over Spray Pothole Patch Trucks		**HGAC**
6100006977		IM	French Ellison Truck Center 9010 IH 10 East Converse. Tx 78109 210 228-2028
Item	**Description**	**Quantity**	
1	Turnkey T300-370, CONV. CAB, SBFA, SRA Cab & Chassis with Bergkamp SP5 Spray Patcher Truck Body	4	
	Price Per Each		$216,503.00
	Subtotal Vehicle Price		$866,012.00
	Year, Make & Model of Cab & Chassis Offered		2017 Kenworth K370
	Cab & Chassis Warranty		1 yr / 100k miles
	Specific Make & Model of Engine Offered (Include SAE NET HP)		PACCAR PX-7
	Engine Warranty		2 yrs / Unlimited Miles
	Specific Make & Model of Transmission Offered		Allison 2500 RDS
	Transmission Warranty		2 yrs / Unlimited Miles
	Cab & Chassis Warranty Service Provider Name		French Ellison Truck Center
	Cab & Chassis Warranty Facility Address		9010 IH 10 East, Converse TX 78109
	Year, Make & Model of Spray Pothole Patcher Offered		2016 Bergkamp SPS Spray Injection Patcher
	Year, Make & Model of Spray Pothole Patcher Body Offered		2016 Bergkamp SPS Spray Injection Patcher
	Spray Pothole Pathcher Body Warranty		1 yr / see attachment
	Spray Pothole Pathcher Body Provider Name		Kinloch Equipment & Supply
	Spray Pothole Patcher Body Facility Address		12100 Crown Point Dr., San Antonio Tx 78233
	Delivery		180 Days
	Production Cut-Off Date		05/01/2016
	Last Place to Order		05/01/2016
	Firm Pricing Date		No
2	Cooperative Fee	1	
	Cooperative Fee Each		$1,500.00
	Total Cooperative Fee		$1,500.00
	Payment Terms		Net 30
	Total Amount		$867,512.00
	Total Award Amount		**$867,512.00**

CITY OF SAN ANTONIO

PURCHASING AND GENERAL SERVICES DEPARTMENT

REQUEST FOR OFFER ("RFO") NO.: 6100006977

CAB OVER SPRAY POTHOLE PATCH TRUCKS

Date Issued: DECEMBER 21, 2015

RESPONSES MUST BE RECEIVED **NO LATER** THAN: 10:00 AM C.T., DECEMBER 23, 2015

Responses may be submitted by any of the following means:
Electronic submission through the Portal
Hard copy in person or by mail

Address for hard copy responses:

Physical Address:
Purchasing & General Services
Riverview Tower
111 Soledad, Fifth Floor Suite 500
San Antonio, Texas 78205

Mailing Address:
Purchasing & General Services
P.O. Box 839966
San Antonio, Texas 78283-3966

For Hard Copy Submissions, Mark Envelope

"CAB OVER SPRAY POTHOLE PATCH TRUCKS"

Offer Due Date: 10:00 A.M., C.T., DECEMBER 23, 2015

RFO No.: 6100006977

Offeror's Name and Address

Bid Bond: N/A Performance Bond: N/A Payment Bond: N/A Other: N/A

See Supplemental Terms & Conditions for information on these requirements.

Affirmative Procurement Initiative: N/A DBE / ACDBE Requirements: N/A

See Instructions for Offerors and Attachments sections for more information on these requirements.

Pre-Submittal Conference * NO

* If YES, the Pre-Submittal conference will be held on N/A at N/A at N/A.

Staff Contact Person: IAN MONTEMAYOR, PS II, P.O. Box 839966, San Antonio, TX 78283-3966
Email: IAN.MONTEMAYOR@SANANTONIO.GOV

SBEDA Contact Information: , 210-207-3900,

002 - TABLE OF CONTENTS

002 - TABLE OF CONTENTS 2
003 - INSTRUCTIONS FOR OFFERORS 3
004 - SPECIFICATIONS / SCOPE OF SERVICES 8
005 - SUPPLEMENTAL TERMS & CONDITIONS 15
006 - GENERAL TERMS & CONDITIONS 18
007 - SIGNATURE PAGE 22
008 - STANDARD DEFINITIONS 23
009 - ATTACHMENTS 24

003 - INSTRUCTIONS FOR OFFERORS

Submission of Offers.

Submission of Hard Copy Offers. Submit one original offer, signed in ink, and two copies of the offer enclosed in a sealed envelope addressed to the Purchasing and General Services Department at the address and by the due date provided on the Cover Page. The name and address of offeror, the offer due date and RFO number and title shall be marked on the outside of the envelope(s). All times stated herein are Central Time. Any offer or modification received after the time and date stated on the Cover Page shall be rejected.

Submission of Electronic Offers. Submit one offer electronically by the due date provided on the Cover Page. All times stated herein are Central Time. Any offer or modification received after the time and date stated on the Cover Page shall be rejected. All forms in this solicitation which require a signature must have a signature affixed thereto, either by manually signing the document, prior to scanning it and uploading it with your submission, or affixing it electronically.

Offers sent to City by facsimile or email shall be rejected.

Modified Offers. Offers may be modified provided such modifications are received prior to the time and date set for submission of offers, and submitted in the same manner as original offers. For hard copy offers, provide a cover letter with the offer, indicating it is a modified offer and that the Original offer is being withdrawn. For electronic offers, a modified offer will automatically replace a prior offer submission. See below for information on submitting Alternate Offers.

City shall not be responsible for lost or misdirected offers or modifications.

Offerors must sign the Signature Page on hard copy offers and return the RFO document to City. For electronic offers, Offeror's electronic submission, with accompanying affirmations, constitutes a binding signature for all purposes.

Offerors are cautioned that they are responsible for the security of their log on ID and password, since unauthorized use could result in Offeror's being held liable for the submission.

Certified Vendor Registration Form. If Offeror has not completed the City's Certified Vendor Registration (CVR) Form, Offeror is required to do so prior to the due date for submission of offers. The CVR form may be accessed at http://www.sanantonio.gov/purchasing/. Offerors must identify the correct name of the entity that will be providing the goods and/or services under the contract. No nicknames, abbreviations (unless part of the legal title), shortened or short-hand names will be accepted in place of the full, true and correct legal name of the entity.

Alternate Offers. Alternate offers may be allowed at the sole discretion of City.

Hard Copy Alternate Offers. Hard copy alternate offers must be submitted in separate sealed envelopes in the same manner as submission of other offers. Alternate offers must be marked consecutively on the envelope as Alternate Offer No. 1, 2, etc. Failure to submit alternate offers in separate envelopes may result in rejection of an offer.

Electronic Alternate Offers Submitted Through the Portal. All alternate offers are recorded with original offers when submitted electronically.

Catalog Pricing. (This section applies to offers using catalog pricing, unless this is a cooperative purchase.)

The offer will be based on manufacturer's latest dated price list(s). Said price list(s) must denote the manufacturer, latest effective date and price schedule.

Offerors shall be responsible for providing one copy of the manufacturer's catalog for each manufacturer for which an offer is submitted. Offeror shall provide said catalog at the time of submission of its offer. Manufacturers' catalogs may be submitted in any of the following formats: paper copy or CD ROM for bids submitted on paper, or PDF file for offers submitted electronically.

Offerors may submit price lists other than the manufacturer's price list. Said price list(s) must denote the company name, effective date and price schedule. These price lists are subject to approval of the City Purchasing & General Services Department.

- Specified items identified herein, if any, are for overall offer evaluation and represent the commonly and most used items. Net prices entered for those specified items must reflect the actual price derived from quoted price list less all discounts offered.

Restrictions on Communication.

Offerors are prohibited from communicating with: 1) elected City officials and their staff regarding the RFO or offers from the time the RFO has been released until the contract is posted as a City Council agenda item; and 2) City employees from the time the RFO has been released until the contract is awarded. These restrictions extend to "thank you" letters, phone calls, emails and any contact that results in the direct or indirect discussion of the RFO and/or offer submitted by Offeror. Violation of this provision by Offeror and/or its agent may lead to disqualification of the offer from consideration.

Exceptions to the restrictions on communication with City employees include:

Offerors may ask verbal questions concerning this RFO at the Pre-Submittal Conference.

Offerors may submit written questions, or objections to specifications, concerning this RFO to the Staff Contact Person listed on the Cover Page on or before three calendar days prior to the date offers are due. Questions received after the stated deadline will not be answered. Questions submitted and the City's responses will be posted with this solicitation. All questions shall be sent by e-mail or through the portal.

Offerors may provide responses to questions asked of them by the Staff Contact Person after responses are received. The Staff Contact Person may request clarification to assist in evaluating the Offeror's response. The information provided is not intended to change the offer response in any fashion. Such additional information must be provided within two business days from City's request.

Offerors and/or their agents are encouraged to contact the Small Business Office of the International and Economic Development Department for assistance or clarification with issues specifically related to the City's Small Business Economic Development Advocacy (SBEDA) Program policy and/or completion of the SBEDA form (s), if any. The point of contact is identified on the Cover Page. Contacting the Small Business Office regarding this RFO after the due date is not permitted. If this solicitation contains Affirmative Procurement Initiatives, it will be noted on the Cover Page.

If this solicitation contains DBE/ACDBE requirements, respondents and/or their agents may contact the Aviation Department's DBE/ACDBE Liaison Officer for assistance or clarification with issues specifically related to the DBE/ ACDBE policy and/or completion of the required form(s). Point of contact is Ms. Lisa Brice, who may be reached via telephone at (210) 207-3505 or through e-mail at lisa.brice@sanantonio.gov. Respondents and/or their agents may contact Ms. Brice at any time prior to the due date for submission of bids. Contacting her or her office regarding this RFO after the due date is not permitted. If this solicitation contains DBE/ACDBE requirements, it will be noted on the Cover Page.

Pre-Submittal Conference.

If a Pre-Submittal Conference is scheduled, it will be held at the time and place noted on the Cover Page. Offerors are encouraged to prepare and submit their questions in writing in advance of the Pre-Submittal Conference in order to expedite the proceedings. City's responses to questions received prior to the conference may be distributed at the Pre-Submittal Conference and posted with this solicitation. Attendance at the Pre-Submittal Conference is optional, but highly encouraged.

This meeting place is accessible to disabled persons. Call the Staff Contact Person for information on the location of the wheelchair accessible entrance, or to request an interpreter for the deaf. Interpreters for the deaf must be requested at least 48 hours prior to the meeting. For other assistance, call (210) 207-7245 Voice/TTY.

Any oral response given at the Pre-Submittal Conference that is not confirmed in writing and posted with this solicitation shall not be official or binding on City.

Changes to RFO.

Changes to this RFO made prior to the offer due date shall be made directly to the original RFO. Changes are captured by creating a replacement version each time the RFO is changed. It is Offeror's responsibility to check for

new versions until the offer due date. City will assume that all offers received are based on the final version of the RFO as it exists on the day offers are due.

No oral statement of any person shall modify or otherwise change or affect the terms, conditions or specifications stated in the RFO.

Preparation of Offers.

All information required by the RFO must be furnished or the offer may be deemed non-responsive and rejected. Any ambiguity in the offer as a result of omission, error, unintelligible or illegible wording shall be construed in the favor of City.

Correct Legal Name. If an Offeror is found to have incorrectly or incompletely stated the name of the entity that will provide goods and/or services, the offer may be rejected.

Line Item Offers. Any offer that is considered for award by each unit or line item, must include a price for each unit or line item for which Offeror wishes to be considered. All offers are awarded on the basis of low line item, low total line items, or in any other combination that serves the best interest of City, unless City designates this solicitation as an "all or none" offer in the Supplemental Terms & Conditions.

All or None Offers. Any offer that is considered for award on an "all or none" basis must include a price for all units or line items. In an "All or None" offer, a unit price left blank shall result in the offer being deemed nonresponsive and disqualified from consideration. An "All or None" offer is one in which City will award the entire contract to one offeror only.

Delivery Dates. Proposed delivery dates must be shown in the offer form where required and shall include weekends and holidays, unless specified otherwise in this RFO. Proposed delivery times must be specific. Phrases such as "as required", "as soon as possible" or "prompt" may result in disqualification of the offer. Special delivery instructions, if any, may be found in the Specifications / Scope of Services section of this document, or in the Purchase Order.

Tax Exemption. The City of San Antonio is exempt from payment of federal taxes, and State of Texas limited sales excise and use taxes. Offerors must not include such taxes in offer prices. An exemption certificate will be signed by City where applicable upon request by Offeror after contract award.

Samples, Demonstrations and Pre-award Testing. If requested by City, Offeror shall provide product samples, demonstrations, and/or testing of items offered to ensure compliance with specifications prior to award of the contract. Samples, demonstrations and/or testing must be provided within 7 calendar days of City's request. Failure to comply with City's request may result in rejection of an offer. All samples (including return thereof), demonstrations, and/or testing shall be at Offeror's expense. Samples will be returned upon written request. Requests for return of samples must be made in writing at the time the samples are provided. Otherwise, samples will become property of City at no cost to City. Samples that are consumed or destroyed during demonstrations or testing will not be returned.

Estimated Quantities for Annual Contracts.

Designation as an "annual" contract is found in the contract's title on the Cover Page of this document. The quantities stated are estimates only and are in no way binding upon City. Estimated quantities are used for the purpose of evaluation. City may increase or decrease quantities as needed. Where a contract is awarded on a unit price basis, payment shall be based on the actual quantities supplied.

Offerors shall thoroughly examine the drawings, specifications, schedule(s), instructions and all other contract documents.

Offerors shall make all investigations necessary to thoroughly inform themselves regarding plant and facilities for delivery of material and equipment, or conditions and sites/locations for providing goods and services as required by this RFO. No plea of ignorance by Offeror will be accepted as a basis for varying the requirements of City or the compensation to Offeror.

Confidential or Proprietary Information. All offers become the property of City upon receipt and will not be returned. Any information deemed to be confidential by Offeror should be clearly noted; however, City cannot guarantee that it will not be compelled to disclose all or part of any public record under the Texas Public Information Act, since information deemed to be confidential by Offeror may not be considered confidential under Texas law, or pursuant to a

Court order. Pricing may be tabulated and posted to City's website, so shall not be considered proprietary or confidential.

Costs of Preparation. Offeror shall bear any and all costs that are associated with the preparation of the Offer, attendance at the Pre-Submittal conference, if any, or during any phase of the selection process.

Rejection of Offers.

City may reject any and all offers, in whole or in part, cancel the RFO and reissue the solicitation. City may reject an offer if:

Offeror misstates or conceals any material fact in the offer; or

The offer does not strictly conform to law or the requirements of the offer;

The offer is conditional; or

Any other reason that would lead City to believe that the offer is non-responsive or Offeror is not responsible.

City, in its sole discretion, may also waive any minor informalities or irregularities in any offer, such as failure to submit sufficient offer copies, failure to submit literature or similar attachments, or business affiliation information.

Changes to Offer Form. Offers must be submitted on the forms furnished. Offers that change the format or content of City's RFO may be rejected.

Withdrawal of Offers. Offers may be withdrawn prior to the due date. Written notice of withdrawal shall be provided to the Staff Contact Person for offers submitted in hard copy. Offers submitted electronically may be withdrawn electronically.

Evaluation and Award of Contract.

City reserves the right to make an award on the basis of City's best interests. Award may also be made based on low line item, low total line items, or in any other combination that serves the best interest of City, unless City designates this solicitation as an "all or none" offer in the Supplemental Terms & Conditions.

A written award of acceptance, manifested by a City Ordinance, and a purchase order furnished to Offeror results in a binding contract without further action by either party. Offeror must have the Purchase Order before making any delivery.

City reserves the right to delete items prior to the awarding of the contract, and purchase said items by other means.

Inspection of Facilities/Equipment. Depending on the nature of the RFO, Offerors' facilities and equipment may be a determining factor in making the offer award. All Offerors may be subject to inspection of their facilities and equipment.

Prompt Payment Discount.

Provided Offeror meets the requirements stated herein, City shall take Offeror's offered prompt payment discount into consideration. The evaluation will not be based on the discount percentage alone, but rather the net price as determined by applying the discount to the offer price, either per line item or total offer amount. However, City reserves the right to reject a discount if the percentage is too low to be of value to City, all things considered. City may also reject a discount if the percentage is so high as to create an overly large disparity between the price City would pay if it is able to take advantage of the discount and the price City would pay if it were unable to pay within the discount period. City may always reject the discount and pay within the 30 day period, at City's sole option.

City will not consider discounts that provide fewer than 10 days to pay in order to receive the discount.

For example, payment terms of 2% 5, Net 30 will NOT be considered in offer evaluations or in the payment of invoices. However, payment terms of 2% 10, Net 30 will result in a two percent reduction in the offer price during offer evaluation, and City will take the 2% discount if the invoice is paid within the 10 day time period.

Prohibited Financial Interest. The Charter of the City of San Antonio and its Ethics Code prohibit a City officer or employee, as those terms are defined in the Ethics Code, from having a financial interest in any contract with City or any City agency such as City-owned utilities. An officer or employee has a "prohibited financial interest" in a contract with City

or in the sale to City of land materials, supplies or service, if any of the following individual(s) or entities is a party to the contract or sale: the City officer or employee; his parent, child or spouse; a business entity in which he or his parent, child or spouse owns ten (10) percent or more of the voting stock or shares of the business entity, or ten (10) percent or more of the fair market value of the business entity; or a business entity in which any individual or entity above listed is a subcontractor on a City contract, a partner or a parent or subsidiary business entity.

State of Texas Conflict of Interest Questionnaire (Form CIQ). Chapter 176 of the Texas Local Government Code requires that persons, or their agents, who seek to contract for the sale or purchase of property, goods, or services with the City, shall file a completed Form CIQ with the City Clerk if those persons meet the requirements under 176.006(a) of the statute.

By law this questionnaire must be filed with the City Clerk not later than the 7th business day after the date the vendor becomes aware of facts that require the statement to be filed. *See* Section 176.006(a-1), Texas Local Government Code.

Form CIQ is available from the Texas Ethics Commission by accessing the following web address:

https://www.ethics.state.tx.us/filinginfo/conflict_forms.htm

In addition, please complete the **City's Addendum to Form CIQ (Form CIQ-A)** and submit it with Form CIQ to the Office of the City Clerk. The Form CIQ-A can be found at:

http://www.sanantonio.gov/atty/ethics/pdf/OCC-CIQ-Addendum.pdf

When completed, the CIQ Form and the CIQ-A Form should be submitted together, either by mail or hand delivery, to the Office of the City Clerk. If mailing, mail to:

Office of the City Clerk, P.O. Box 839966, San Antonio, TX 78283-3966.

If delivering by hand, deliver to:

Office of the City Clerk, City Hall, 2nd floor, 100 Military Plaza, San Antonio, TX 78205.

Do not include these forms with your sealed bid. The Purchasing Division will not deliver the forms to the City Clerk for you.

004 - SPECIFICATIONS / SCOPE OF SERVICES

4.1 **SCOPE:** The City of San Antonio is issuing this Request for Offer (RFO) to furnish four turnkey cab over spray pothole patch trucks in accordance with the specifications listed herein. The trucks will be utilized by the City's Transportation and Capital Improvements department. This RFO is issued pursuant to cooperative purchasing contract number HT06-14 through HGAC with French Ellison Truck Center ("French Ellison"), who will provide the four turnkey cab over spray pothole patch trucks, using the body pricing offered to the City pursuant to HGAC contract number SM10-14 with Bergkamp, Inc. This is a turnkey contract, however, and French Ellison shall be solely responsible for providing a complete truck meeting all specifications contained herein, including those pertaining to the body, and shall be ultimately responsible for payment to Bergkamp, Inc. for the body.

4.2 **General Conditions:** The following general conditions will apply to all terms within this bid unless specifically excluded within any item.

4.2.1 Equipment shall be manufacturer's latest design, standard production model and shall have been manufactured within the last 12 months from the date of delivery to City. All components shall be installed new, unused, and shall be manufacturer's standard equipment unless otherwise specified or replaced herein. Equipment is to be inspected, serviced, and adjusted in accordance with manufacturer's recommended pre-delivery checklist, and ready for operation upon delivery. Manufacturer's Statement of Origin (MSO) showing manufacture within the last 12 calendar months, and completed pre-delivery checklists will be required at delivery. Equipment offered under the below listed specifications will be considered unacceptable if, for any reason, the equipment's, or major component's, long term availability on the U.S. market, or in the local area, is in doubt. All equipment will conform to the best practice known to the body trade in design, quality of material and workmanship. Assemblies, subassemblies and component parts to be standard and interchangeable throughout the entire quantity of units as specified in this invitation to bid. The equipment furnished must conform to ANSI Safety Standard Z245.1-1999.

4.2.2 Equipment must include the maximum standard manufacturer's warranty on all components, with parts and service included. All components, parts and service shall include, as a minimum, a one year unlimited mileage/hours warranty. All warranty times shall start the date the vehicle is placed in service as determined by the City, not on the delivery date. The dealer will be notified by letter of the in-service date of each vehicle by serial number. Bidder shall fully explain the warranty by attaching separate, authenticated correspondence or entering such information in the remarks section of this bid. Warranty, reliability, and replacement captive parts costs and availability shall be a consideration in award of this bid. Warranty parts and service must be available within 50 mile radius of San Antonio City Hall from and by a factory-authorized dealer (NO EXCEPTIONS). In the event that a unit purchased from a vendor requires transportation outside of Bexar County for a repair covered under warranty, that vendor shall be responsible for paying for all cost associated with the transportation to and from the warranty repair facility. If the vendor chooses to travel to inspect the unit to determine if the repair needed is covered under warranty, all expenses shall be paid for by the vendor. All warranty repairs must be completed within three business days from the date equipment is delivered to the vendor, unless otherwise approved by the appropriate City of San Antonio BESD Fleet Operations Manager or designee. Bidders must certify that all repairs needed after the warranty period will be available within 50 mile radius of San Antonio City Hall.

4.2.3 Delivery - All deliveries are to be made inside the City limits of San Antonio. Vendor must deliver equipment to the following address:

City of San Antonio,
Northeast Service Center,
10303 Tool Yard, Bldg #2,
San Antonio, TX 78233
Attn: Acquisitions

Delivery to a non-specified location will result in non-acceptance of the equipment by the City. All deliveries must be pre-arranged with a minimum 24-hour notification, NO EXCEPTIONS. Vehicles will be accepted 8:00 A.M. to 3:00 P.M. CT. Vehicles with more than 3000 miles accumulated on the odometer will not be accepted. All vehicles are required to have a full tank(s) when delivered to City specified location.

4.2.4 French Ellison shall complete all work and deliver turnkey units ready for use to City no later than 185 days after receipt of City's original Purchase Order, unless extension is granted in writing by the City's Director of Building and Equipment Services, or his designee.

4.2.5 **Time is of the essence in the performance of this contract.** City may assess liquidated damages for late delivery in accordance with section 005 – Supplemental Terms & Conditions.

4.2.6 The engine offered by bidder must conform to the latest NOx Environmental Protection Agency (EPA) and GHG emission standards in effect at the time of offer, without the benefit of averaging, banking, trading, or emission credits. Bidder shall submit a copy of the latest applicable Emissions Certificate of Conformity EPA certificate for the vehicles bid. Only engines using selective catalytic reduction (SCR) technology will be accepted.

4.2.7 Equipment Manuals – Vendor to furnish one set of operator manuals covering all major components of the vehicle (cab, chassis and bodies) for each unit delivered. Vendor shall also provide five complete sets of following: Parts Manual, Maintenance Manual, Service Manual, and Operators Manual or CD ROM of all equipment, accessories, and components and shop repair manuals or CD/DVDs for each item bid, to include all major components, or prepaid 8-year subscription to manufacturer's maintenance/parts web site at no cost to the City. USB Flashdrives, Jumpdrives and/or Thumbdrives are acceptable. The supplier shall furnish four complete sets of detailed literature and specifications of each vehicle type upon contract award.

4.2.8 Training - The Contractor will fully instruct the Owners personnel in the operation of the equipment furnished, after delivery, at no additional cost to the Owner. The instruction period will be of sufficient duration (minimum one day) to fully familiarize the Owners operating personnel with all elements of the equipment, and the appropriate maintenance of the equipment and related parts. This instruction and testing will be conducted by trained personnel of the Contractor and will include full instruction in equipment operation, field procedures, techniques of use, maintenance, troubleshooting, and recording and logging of field information. All training will be completed at a time mutually agreed to by the parties, and no later than one week after delivery at a location determined by City. Contractor shall furnish all materials needed to complete the training.

4.2.9 All bids must include complete manufacturer's specifications for each model being bid. Vendor is required to notify the City of all production "cut-off" dates necessary for order submission.

4.2.10 As used in this bid the left and right side is determined by sitting in the operator seat.

4.2.11 No dealership nameplates, markings or decals will be permitted on the vehicles.

4.2.12 All units must be delivered to the City in a ready for service condition.

4.2.13 All accessories and equipment will be OEM. The manufacturer must rate all equipment provided as low emission.

4.2.14 VEHICLE INSPECTION: The vendor shall have each vehicle properly inspected in compliance with Texas motor vehicle laws.

4.2.14.1 CHECK-IN INSPECTION: The City shall check the vehicle upon delivery to ensure compliance with this specification and any other specific requirements. The vendor shall deliver with the vehicle a vehicle-specific line-setting ticket, manufacturer's invoice, and MSO or any official documentation to verify the fact that ordered options, GVWR rating, and other requirements have been met.

4.2.14.2 Failure meet requirements as listed in document specifications may cause the delay of payment. Payment will be made within 30 days or payment terms after vehicle's acceptance or receipt of correct invoice, whichever is later. Acceptance will not be made, nor payment initiated on vehicles failing to meet specifications (unless they are brought into full compliance), and all necessary documents (i.e. MSO, odometer statement, etc.) are received by the City.

4.2.14.3 The City shall have a maximum of five working days to complete this inspection. Sample of inspection check list is attached as Attachment Exhibit 1. **The inspection check list will be completed by City of San Antonio personnel after vehicle has been delivered.**

4.2.15 Air Conditioning – Air conditioning with integral heater and defroster units supplied under this specification to be OEM installed and designed for use with R-134A refrigerant. System must be capable of maintaining a temperature inside the operator cab of 70° F or less with an ambient temperature of not less than 95° F with a relative humidity of not less than 90%. As a minimum, system must have a radiator-mounted condenser, 3-speed fan and variable thermostat. If radiator mounted condenser is not practical, remote mount must be approved by

the Fleet Maintenance and Operations Manager before installation. Roof mounted units not acceptable. All air conditioner components to be compatible and recommended for end item.

4.2.16 Diagnostic Tools – The vendor shall supply the most current version of software for engine, transmission, anti-lock braking system and any systems that require software. The software shall also include a minimum of two year subscription and activation fee. Vendor shall also provide any hardware required for software to communicate with engines ECM (such as data link adapter, wiring harness, etc). Vendor shall provide City with four diagnostic software Licenses with hardware and four diagnostic software renewals/updates. Vendor shall also provide City with four software Licenses for anti-lock braking system, if Bendix braking system is not being offered.

4.2.17 BRAND NAMES: Manufacturer names, trade names, brand names, and product numbers used herein are for the purpose of describing and establishing tested, compatible, approved and acceptable products that are of the type and quality required by the City. The use of pre-approved brand names are not intended to limit competition; therefore the phrase "or equal" is added. For purposes of this contract, the proposed "or equal" products shall require close adherence to the established standards of performance and quality inherently derived and reasonably expected from the brand named products specified herein. The City shall be the sole judge of equality and suitability.

4.3	**ITEM**	**QUANTITY**	**DESCRIPTION**
	1	**4 Each**	**T300-370, CONV. CAB, SBFA, SRA Cab & Chassis**

TRUCK CAB & CHASSIS MIMINUM SPECIFICATIONS:

4.3.1 **ENGINE:** Diesel, minimum 6 cylinder, 220 HP with a minimum 520 lbs ft torque

4.3.2 **TRANSMISSION**: Minimum Allison 2500 RDS, or proven equal, with PTO drive gear, 5th generation controls.

4.3.3 **ELECTRICAL**: Unit to be equipped with a minimum two threaded post batteries; 2000 CCA. 160 amp, brush type only. Battery box to be located at the right hand back of cab.

4.3.4 **CAB TO AXLE**: Minimum 129".

4.3.5 **WHEELBASE**: Minimum 146"

4.3.6 **TIRES & WHEELS**: 11R 22.5 14 ply tires mounted on 22.5 inch wheels

4.3.7 **FRONT AXLE**: Minimum 12,000 lbs air brake package; drum brakes, iron 10-bolt hub piloted hubs.

4.3.8 **REAR AXLE**: Minimum 21,000 lbs air brake package to include 16.5x7" brakes, cast drums, iron 10-bolt hub pilots hubs, slack adjusters & oil seals for use on 22.5" wheels.

4.3.9 **FRAME RAIL**: Minimum 10 -1/4 inch steel to 414 inches.

4.3.10 **FUEL/DEF TANK**: Unit to be equipped with a minimum 45 gallon rectangular steel fuel tank and a rectangular 7.5 gallon Diesel Exhaust Fluid tank. DEF gauge to be mounted in cab.

4.3.11 **CAB & EQUIPMENT**: Steel 6.4 inch BBC, COE, left hand drive with the following:

4.3.11.1 Daycab rear window with tinted safety glass throughout.
4.3.11.2 Electric windshield wipers with intermittent feature.
4.3.11.3 Electric powered LH &RH window lifts with switch located on door pad.
4.3.11.4 Heated Driving mirrors LH and RH with convex mirror over RH door.
4.3.11.5 High level grey interior trim.
4.3.11.6 Rubber floor mats.
4.3.11.7 Combo fresh air heater and air conditioner.
4.3.11.8 Smart wheel 18 "black four-spoke soft touch steering wheel with adjustable tilt steering column.
4.3.11.9 Electric horn.
4.3.11.10 12 volt cigar lighter with ash tray.

4.3.11.11 Driver and passenger seats.
4.3.11.12 Console mounted push button transmission controls and backwall storage.

4.3.12 **SAFETY**: Unit to have daytime running lamps at all times in operation. Electric backup alarm to meet SAE J994 & OSHA requirements. Unit to be equipped with 5lb fire extinguisher, triangle kit, and flares. Items are to be mounted under the seat in the cab.

Turnkey Bergkamp SP5 Spray Patcher Truck Body Minimum Specifications

4.3.13 **AGGREGATE HOPPER SYSTEM:**

4.3.13.1 The aggregate hopper shall have a minimum of five cubic yard (3.8 m^3) total capacity.
4.3.13.2 Hopper must be a dual-chamber (60/40) system to allow for two different gradations of aggregate.
4.3.13.3 One side with a three cubic yard capacity; the other with a two cubic yard capacity.
4.3.13.4 Each section of the aggregate hopper shall be equipped with an auger to control the flow of the aggregate into the forced air delivery system.
4.3.13.5 Each auger shall have a protective cover for the entire length of the aggregate hopper.
4.3.13.6 The protective cover should be positioned to allow aggregate of the recommended size for use, to flow freely without exposing the augers at any time.
4.3.13.7 Each auger should be hydraulically driven with variable speed and directional controls located on the operator panel inside the cab.
4.3.13.8 Spray Injection Systems equipped with slide gates of any type will not be acceptable.

4.3.14 **AGGREGATE DELIVERY SYSTEM:**

4.3.14.1 The aggregate delivery hose shall be a minimum of three inches inside diameter, made of very high abrasion resistant material, with antistatic layers, and steel wire reinforcement.
4.3.14.2 The flexible aggregate hose shall attach to the boom's aggregate pipe that shall have an inside diameter of not less than 2 ¾ inches.
4.3.14.3 The boom's aggregate pipe shall be equipped with an anti-wear chamber to reduce the amount of abrasion of the pipe at the most extreme angle of the aggregate delivery system.
4.3.14.4 The aggregate shall flow directly through the nozzle assembly, where it will be coated by heated asphalt emulsion before the aggregate leaves the nozzle assembly and enters the repair area.
4.3.14.5 The chamber where the aggregate enters the air flow must be equipped with an access panel to allow for cleaning of the chamber without removing the aggregate hose.

4.3.15 **AGGREGATE BLOWER:**

4.3.15.1 The aggregate blower shall be capable of producing air flow of 450 CFM, at 7 PSI.
4.3.15.2 The blower shall be driven by the auxiliary engine.
4.3.15.3 The aggregate blower shall be contained and enclosed inside an engine compartment and mounted on a platform with isolators.

4.3.16 **AUXILLARY ENGINE:**

4.3.16.1 The auxiliary diesel engine shall be a 35.1 HP, liquid cooled Kubota V1505.
4.3.16.2 Auxiliary engine supplied by a 15 gallon fuel tank.
4.3.16.3 The engine shall be contained and enclosed inside an inside the engine compartment, mounted on a platform with isolators.

4.3.17 **EMULSION TANK:**

4.3.17.1 The emulsion tank shall have a minimum capacity of 265 gallons.
4.3.17.2 The tank shall contain a heat tube that runs at least ¾ of the entire length of the tank on one side and returns the same length on the other side of the tank, with an exhaust tube that extends above the patcher body.
4.3.17.3 The burner shall be an electrically controlled, diesel fired system with the temperature controlled by a thermostat.
4.3.17.4 The emulsion tank must be insulated to maintain temperature during cold weather.
4.3.17.5 Unit shall have an emulsion tank level gage in a location that can be seen from the operator's position inside the cab of the truck.

4.3.17.6 The emulsion tank must have an adjustable thermostat and temperature gage mounted on the tank that can be seen from the operator's position in the cab.

4.3.17.7 The emulsion tank shall have a top access door that can be used for filling. The door must have a seal and be secured in position with an eye-bolt, or T-bolt mechanism.

4.3.17.8 There shall be a two inch tube mounted below the bottom of the tank to allow for easy draining or filling of the tank.

4.3.17.9 The tube must have a ball valve type tank shut-off and a cam-lock connector for easy connection of suction or fill hoses.

4.3.18 **EMULSION SYSTEM:**

4.3.18.1 The emulsion pump shall be hydraulically driven.

4.3.18.2 The pump shall contain a water jacket to allow auxiliary engine antifreeze to flow through the pump during cold weather.

4.3.18.3 There shall be a tank shut-off valve to prevent emulsion from entering the emulsion pump during and after cleanout.

4.3.18.4 There shall be a valve to allow for direct recirculation from the bottom of the tank, through the emulsion pump, and back into the tank to facilitate even heating of the emulsion.

4.3.18.5 The recirculation hoses shall have a check valve installed at the entry point of the tank to prevent emulsion from flowing out of the tank.

4.3.18.6 The emulsion circulation valve shall direct flow from recirculation to operation mode, which pumps the emulsion to the spray nozzle.

4.3.18.7 The emulsion shall be recirculated back to the emulsion tank to maintain the emulsion temperature evenly throughout the entire system whenever the emulsion control valve at the spray nozzle assembly is not activated.

4.3.18.8 The emulsion control valve must be controlled by a button on the joystick inside the cab.

4.3.18.9 There shall be a valve installed to control the pressure of the emulsion exiting the spray nozzle assembly.

4.3.18.10 The valve shall be easily accessible and mounted on the front of the patcher body.

4.3.18.11 The valve must be variable to allow for viscosity specification changes made by the emulsion suppliers.

4.3.19 **FRONT MOUNTED BOOM:**

4.3.19.1 The boom shall consist of two vertical pivots and a horizontal pivot, to Facilitate ease of operation and allow for storage against the front of the patcher truck without obstructing the driver's view.

4.3.19.2 The boom must be a minimum of 13 ½ feet long when fully extended.

4.3.19.3 The second section of the boom must be able to be raised and lowered independently from the joystick controls.

4.3.19.4 The second section of the boom should also be able to rotate a minimum of 270 degrees at the pivot, to allow for precise control of the placement of the nozzle assembly over the work area.

4.3.19.5 All moveable parts of the boom assembly must have easily accessible grease zerks.

4.3.19.6 All hydraulic, emulsion, air, and antifreeze hoses attached for use on the boom, must use quick disconnect fittings.

4.3.19.7 All hoses must be routed through guides and secured in a support cradle.

4.3.19.8 All hoses located on the boom should be routed through a protective corrugated hose to prevent any type of damage.

4.3.19.9 The aggregate hose must have an easily accessible connector located at the front of the truck cab, to allow for quick disconnect.

4.3.19.10 The boom shall be attached using a mounting pad secured to the frame of the truck.

4.3.19.11 The boom must be easily removable, and equipped with a wheeled storage device to allow for easy removal and storage of the boom when not required for use, or for required maintenance of the truck.

4.3.19.12 Telescoping booms and/or tri-fold booms will not be acceptable.

4.3.20 **SPRAY NOZZLE & ASSEMBLY:**

4.3.20.1 The spray nozzle assembly must be capable of rotation in a circular pattern for better coverage and compaction of the treated area.

4.3.20.2 The spray nozzle shall be perpendicular with the Boom for a 90 degree directional spray, allowing for even coverage to all walls of the pot hole or damaged area.

4.3.20.3 The spray nozzle assembly shall be located at the end of the boom and must be threaded for easy removal for periodic cleaning and maintenance.

4.3.20.4 It shall have three 5/64" holes spread 120 degrees apart to permit complete aggregate coating from a minimum of three sides as it is blown through the spray nozzle assembly.

4.3.20.5 Spray Systems with a non-ninety degree, directional spray will not be acceptable.

4.3.21 **IN CAB CONTROLS:**

4.3.21.1 **JOYSTICK**: The joystick movement must be able to control the boom throughout its full range of motion and the button functions must, at a minimum, be able to control the flows of emulsion, aggregate, and reduction of air.

4.3.21.2 **OPERATOR'S CONSOLE**: The operator's console must contain switches to control the augers, engine speed, rotation of the spray nozzle, emulsion pump, and an emergency shut-off for the auxiliary engine. The operator's console must also contain potentiometers to control the speed of the emulsion pump and each auger, with lights indicating that the emulsion and auger switches are activated, and the engine is at minimum operating speed.

4.3.22 **TELEMATIC SYSTEM:**

4.3.22.1 The system must be Cloud-based, allowing secure access, with search and multiple reporting functions from any internet-ready device.

4.3.22.2 The system must automatically generate performance data and information for each crew, all materials used, and the unit itself.

4.3.22.3 The system shall have a GPS function tracking every unit and pot hole repair, that will export data and mapping functions to a Shape File for blending into a GIS system.

4.3.23 **HYDRAULIC SYSTEM:**

4.3.23.1 The hydraulic pump shall be attached directly to the auxiliary engine.

4.3.23.2 The hydraulic reservoir and oil cooler with fan shall be contained within the auxiliary engine compartment.

4.3.23.3 The proportional valves used for controlling the hydraulically driven components will be mounted underneath the engine compartment with easy access for adjustments and maintenance.

4.3.23.4 The hydraulic tank shall have a level indicator and a temperature gauge installed.

4.3.24 **HYDRAULIC SYSTEM:**

4.3.24.1 The hydraulic pump shall be attached directly to the auxiliary engine.

4.3.24.2 The hydraulic reservoir and oil cooler with fan shall be contained within the auxiliary engine compartment.

4.3.24.3 The proportional valves used for controlling the hydraulically driven components will be mounted underneath the engine compartment with easy access for adjustments and maintenance.

4.3.24.4 The hydraulic tank shall have a level indicator and a temperature gauge installed.

4.3.25 **PATCHER BODY:**

4.3.25.1 The patcher body shall be designed in such a manner that it can be quickly and easily removed in approximately one hour and stored, on the manufacturer provided storage legs.

4.3.25.2 All hoses and electrical connections must be quick disconnect type and be able to be disconnected at the front of the patcher body.

4.3.25.3 The hoses must be color coded for easy reconnection.

4.3.25.4 The storage legs must be inserted into the mounting receivers and have hand cranks to raise the patcher body so that the vehicle can easily be driven out from underneath with it being left supported on only the storage legs, and no other requirement of assistance.

4.3.26 **DIRECTIONAL SIGN BOARD:**

4.3.26.1 Shall be the size and type that is required for use by the purchaser.

4.3.27 **WARNING LIGHTS:**

4.3.27.1 All lighting shall be of a size and type required for use by the purchaser.

4.3.28 **SAFETY**:

4.3.28.1 All required safety placards and decals shall be provided by the manufacturer and affixed in the proper location according to the current federal and state safety laws, at the time and location of delivery.

4.3.28.2 All hazards must be identified in the maintenance support manuals and operator's manuals, individually listing the type of hazard, level of hazard, avoidance practices and emergency medical procedures for the type and level of hazard.

4.3.29 **LIGHTS:**

4.3.29.1 All lights on cab and chassis and/or bodies are to be of L.E.D. type (Light Emitting Diode), where available.

4.3.29.2 LED Lights will be mounted along all sides of body and rear section. These lights are to be swivel and adjustable work lights. Sufficient lighting must be provided to illuminate all working areas. Electrical control station will have a minimum of one weather resistant control box. Each driven system will be individually controlled by a lighted, environmentally sealed switch, and each switch must be fused in accordance to the load it is driving. A 70-amp relay powered by the ignition switch will provide power to the main system. Light switches shall be powered by ignition switch.

4.3.29.3 Double sided LED Ten Light Arrowboard. Special frame shall be built to insure arrowboards are visible to oncoming traffic as well as traffic to the rear. Safety Lighting and Alarms shall have two 12-volt DC strobe lights flashing, amber color. Directional arrow board shall be 12-volt DC with cab controls for off-on and patterns (left arrow, right arrow, both arrows and flasher bar) must be visible from front and rear.

4.3.29.4 LED strobe Light mounted onto rear of machine.

4.3.30 Back up camera with night vision and sound.

4.3.31 Tarp system with manual arms and retractable semi-automatic roller mechanism to cover aggregate hopper.

4.3.32 Machine will be painted Omaha Orange.

005 - SUPPLEMENTAL TERMS & CONDITIONS

Original Contract Term.

This contract shall begin upon the effective date of the ordinance awarding the contract, or date specified in the award letter if this contract does not exceed $50,000. This contract shall terminate upon completion of all work described herein or delivery of all goods ordered, as applicable.

Cooperative Contract Provisions.

Term Consistent with Cooperative Contract. Notwithstanding anything to the contrary herein, no new orders may be placed hereunder after the expiration or termination of the underlying cooperative contract. Renewals cannot extend beyond the term of the underlying cooperative contract. Extensions cannot extend beyond the term of the underlying cooperative contract.

Contract Documents. The terms and conditions for performance and payment of compensation for this contract are set forth in the following contract documents, true and correct copies of which are attached hereto and fully incorporated herein for all purposes:

This Request for Offer, including any attachments identified herein and addenda issued by City prior to acceptance of an offer from Offeror;

Any Purchase Orders Issued hereunder by City of San Antonio ("City"); and

Exhibit I – All applicable terms and conditions of the Cooperative Purchasing Contract number HT06-14 through HGAC.

Order of Priority of Contract Documents. Should a conflict arise among the provisions of the contract documents, this RFO and any Purchase Order issued hereunder shall govern over Exhibit I, unless otherwise specifically provided herein.

This RFO includes the following: Instructions to Offerors, General Terms and Conditions, Supplemental Terms and Conditions, Product Specifications and Description of Services, Definitions, Price Schedule, any Attachments identified herein.

Warranty.

The warranty specified in Exhibit 1, if any, a minimum of 90-days product guarantee, or the manufacturer's standard commercial warranty, whichever is greater, shall apply to all products and/or services purchased under this RFO, unless otherwise specified in the Specifications/Scope of Services section of this RFO. This warranty shall provide for replacement of defective merchandise, parts, and labor, and shall include pick-up of the defective merchandise from City and delivery of the replacement(s) to the same location. The warranty shall be effective from the date of acceptance of the merchandise, or completion of the service, as applicable.

Rejection of Disclaimers of Warranties & Limitations Of Liability.

ANY TERM OR CONDITION IN EXHIBIT I, OR IN ANY DOCUMENT FURNISHED BY VENDOR, DISCLAIMING THE IMPLIED WARRANTY OF MERCHANTABILITY OR OF FITNESS FOR A PARTICULAR PURPOSE, OR ATTEMPTING TO LIMIT VENDOR'S LIABILITY SHALL BE OF NO FORCE OR EFFECT, AND SHALL BE STRICKEN FROM THE CONTRACT DOCUMENTS AS IF NEVER CONTAINED THEREIN.

All Or None Bid.

City of San Antonio will make award to one vendor only.

Insurance.

Prior to the commencement of any work under this Agreement, Vendor shall furnish copies of all required endorsements and completed Certificate(s) of Insurance to the City's Finance Department, which shall be clearly labeled "CAB OVER SPRAY POTHOLE PATCH TRUCKS" in the Description of Operations block of the Certificate. The Certificate(s) shall be completed by an agent and signed by a person authorized by that insurer to bind coverage on its behalf. City will not accept a Memorandum of Insurance or Binder as proof of insurance. The certificate(s) must have the agent's signature and phone number, and be mailed, with copies of all applicable endorsements, directly from the insurer's authorized representative to City. City shall have no duty to pay or perform under this Agreement until such certificate and endorsements have been received and approved by City's Finance Department. No officer or employee, other than City's Risk Manager, shall have authority to waive this requirement.

City reserves the right to review the insurance requirements of this Article during the effective period of this Agreement and any extension or renewal hereof and to modify insurance coverages and their limits when deemed necessary and prudent by City's Risk Manager based upon changes in statutory law, court decisions, or circumstances surrounding this Agreement. In no instance will City allow modification whereby City may incur increased risk.

A Vendor's financial integrity is of interest to City; therefore, subject to Vendor's right to maintain reasonable deductibles in such amounts as are approved by City, Vendor shall obtain and maintain in full force and effect for the duration of this Agreement, and any extension here of, at Vendor's sole expense, insurance coverage written on an occurrence basis, unless otherwise indicated, by companies authorized to do business in the State of Texas and with an A.M Best's rating of no less than A- (VII), in the following types and for an amount not less than the amount listed below:

TYPE	AMOUNTS
1. Commercial General Liability Insurance to include coverage for the following: a. Premises/Operations b. Products/Completed Operations c. Personal/Advertising Injury	For Bodily Injury and Property Damage of $1,000,000 per occurrence; $2,000,000 General Aggregate, or its equivalent in Umbrella or Excess Liability Coverage

Vendor agrees to require, by written contract, that all subcontractors providing goods or services hereunder obtain the same insurance coverages required of Vendor herein, and provide a certificate of insurance and endorsement that names Vendor and City as additional insureds. Vendor shall provide City with said certificate and endorsement prior to the commencement of any work by the subcontractor. This provision may be modified by City's Risk Manager, without subsequent City Council approval, when deemed necessary and prudent, based upon changes in statutory law, court decisions, or circumstances surrounding this agreement. Such modification may be enacted by letter signed by City's Risk Manager, which shall become a part of the contract for all purposes.

As they apply to the limits required by City, City shall be entitled, upon request and without expense, to receive copies of the policies, declaration page, and all endorsements thereto and may require the deletion, revision, or modification of particular policy terms, conditions, limitations, or exclusions (except where policy provisions are established by law or regulation binding upon either of the parties hereto or the underwriter of any such policies). Vendor shall be required to comply with any such requests and shall submit a copy of the replacement certificate of insurance to City at the address provided below within 10 days of the requested change. Vendor shall pay any costs incurred resulting from said changes.

City of San Antonio
Attn: Finance Department
P.O. Box 839966
San Antonio, Texas 78283-3966

Vendor agrees that with respect to the above required insurance, all insurance policies are to contain or be endorsed to contain the following provisions:

Name City, its officers, officials, employees, volunteers, and elected representatives as additional insureds by endorsement, as respects operations and activities of, or on behalf of, the named insured performed under contract with City, with the exception of the workers' compensation and professional liability policies;

Provide for an endorsement that the "other insurance" clause shall not apply to the City of San Antonio where City is an additional insured shown on the policy;

Workers' compensation, employers' liability, general liability and automobile liability policies will provide a waiver of subrogation in favor of City; and

Provide advance written notice directly to City of any suspension, cancellation, non-renewal or material change in coverage, and not less than ten (10) calendar days advance notice for nonpayment of premium.

Within five (5) calendar days of a suspension, cancellation or non-renewal of coverage, Vendor shall provide a replacement Certificate of Insurance and applicable endorsements to City. City shall have the option to suspend Vendor's performance should there be a lapse in coverage at any time during this contract. Failure to provide and to maintain the required insurance shall constitute a material breach of this Agreement.

In addition to any other remedies City may have upon Vendor's failure to provide and maintain any insurance or policy endorsements to the extent and within the time herein required, City shall have the right to order Vendor to stop work hereunder, and/ or withhold any payment(s) which become due to Vendor hereunder until Vendor demonstrates compliance with the requirements hereof.

Nothing herein contained shall be construed as limiting in any way the extent to which Vendor may be held responsible for payment of damages to persons or property resulting from Vendor's or its subcontractors' performance of the work covered under this Agreement.

It is agreed that Vendor's insurance shall be deemed primary and non-contributory with respect to any insurance or self insurance carried by City for liability arising out of operations under this Agreement.

It is understood and agreed that the insurance required is in addition to and separate from any other obligation contained in this Agreement and that no claim or action by or on behalf of City shall be limited to insurance coverage provided.

Vendor and any subcontractors are responsible for all damage to their own equipment and/or property.

Incorporation of Attachments.

Each of the attachments listed below is an essential part of this contract, which governs the righ ts and duties of the parties, incorporated herein by reference, and shall be interpreted in the order of priority as appears below, with this document taking priority over all attachments:

Attachment A – Price Schedule
Attachment B – Veteran-Owned Small Business Preference Program Tracking Form

Liquidated Damages for Delay:

The parties agree that the actual damages that might be sustained by the City by reason of the breach by Vendor of its covenant to make delivery within the time specified herein, is uncertain and would be difficult of ascertainment, and that the sum of $100.00 per day per unit for each day that delivery is late would be a reasonable compensation for such breach. Vendor hereby promises to pay, and City hereby agrees to accept, such sum as liquidated damages, and not as a penalty, in the event of such breach. Furthermore, the parties agree that City may withhold said liquidated damages from any payments due to Vendor hereunder. If Vendor's delay exceeds 30 days, City may, at its option, elect to terminate this contract in whole or in part. In such event, City may pursue actual damages, rather than applying this liquidated damages provision.

006 - GENERAL TERMS & CONDITIONS

Electronic Offer Equals Original. If Vendor is submitting an electronic offer, City and Vendor each agree that this transaction may be conducted by electronic means, as authorized by Chapter 322, Texas Business & Commerce Code, known as the Electronic Transactions Act.

Delivery of Goods/Services.

Destination Contract. Vendor shall deliver all goods and materials F.O.B., City of San Antonio's designated facility, inside delivery, freight prepaid, to the address provided in this RFO or, if different, in the Purchase Order. Vendor shall bear the risk of loss until delivery. Freight charges will be paid only when expedited delivery is requested and approved in writing by City. Vendor shall be responsible for furnishing necessary personnel or equipment and/or making necessary arrangements to off load at City of San Antonio facility, unless otherwise noted herein.

Failure to Deliver. When delivery is not met as provided for in the contract, City may make the purchase on the open market, with any cost in excess of the contract price paid by Vendor, in addition to any other direct, indirect, consequential or incidental damages incurred by City as a result thereof. In addition, Vendor may be removed from City's list of eligible bidders.

Purchase Orders. Each time a City department wishes to place an order against this contract, it will issue Vendor a purchase order. Vendor must have the purchase order before making any delivery.

Acceptance by City. City shall have a reasonable time (but not less than 30 days) after receipt to inspect the goods and services tendered by Vendor. City at its option may reject all or any portion of such goods or services which do not, in City's sole discretion, comply in every respect with all terms and conditions of the contract. City may elect to reject the entire goods and services tendered even if only a portion thereof is nonconforming. If City elects to accept nonconforming goods and services, City, in addition to its other remedies, shall be entitled to deduct a reasonable amount from the price thereof to compensate City for the nonconformity. Any acceptance by City, even if non-conditional, shall not be deemed a waiver or settlement of any defect in such goods and services.

Testing. After award of contract, City may, at its sole option, test the product delivered to ensure it meets specifications. Initial testing shall be at City's expense. However, if the product does not to meet specifications, Vendor shall reimburse City for the costs of testing. City may withhold the cost of testing from any amounts owed to Vendor under this or any other contract, or invoice Vendor for same. If invoiced, Vendor shall pay City within 30 calendar days' of the invoice.

Invoicing and Payment.

Address for Invoices. All original invoices must be sent to: City of San Antonio, Attn: Accounts Payable, P.O. Box 839976, San Antonio, Texas 78283-3976.

Information Required On Invoice.

All invoices must be in a form and content approved by City. City may require modification of invoices if necessary in order to satisfy City that all billing is proper and pursuant to the terms of the contract. Invoices are required to show each City Purchase Order Number. Invoices must be legible. Items billed on invoices must be specific as to applicable stock, manufacturer, catalog or part number (if any). All invoices must show unit prices for each item being billed, the quantity of items being billed and the total for each item, as well as the total for all items on the invoice. If prices are based on list prices basis, then the list prices, the percentage discount or percentage surcharge, net unit prices, extensions and net total prices must be shown. Prompt payment discounts offered shall be shown separately on the invoice.

Payment by City.

In accordance with the Texas Prompt Payment Act, City shall have not less than 30 days to pay for goods or services. Time for payment, including payment under discount terms, will be computed from the later of: (1) the date City receives conforming goods under the contract; (2) the date performance of the service under the contract is completed; or (3) the date City receives a correct and valid invoice for the goods or services. Payment is deemed to be made on the date of mailing of the check. Payment is made in US dollars only.

This provision shall not apply where there is a bona fide dispute between City and Vendor about the goods delivered or the service performed that causes the payment to be late, or where the invoice is not mailed to the address provided herein.

The payment amount due on invoices may not be manually altered by City personnel. Once disputed items are reconciled, Vendor must submit a corrected invoice or a credit memorandum for the disputed amount. City will not make partial payments on an invoice where there is a dispute.

NECESSITY OF TIMELY INVOICE / WAIVER OF PAYMENT. NOTWITHSTANDING THE FORGOING, CITY CANNOT PAY FOR ANY GOODS OR SERVICES WITHOUT AN INVOICE. VENDOR MUST INVOICE CITY NO LATER THAN 90 CALENDAR DAYS FROM THE DATE GOODS ARE DELIVERED OR SERVICES RENDERED. FAILURE TO SUBMIT AN INVOICE WITHIN SAID 90 DAY SHALL NEGATE ANY LIABILITY ON THE PART OF CITY AND CONSTITUTE A **WAIVER** BY VENDOR OF ANY AND ALL RIGHT OR CLAIMS TO COLLECT MONEYS THAT VENDOR MAY RIGHTFULLY BE OTHERWISE ENTITLED TO FOR GOODS OR SERVICES PERFORMED.

The total price for all goods and/or services is shown on the Price Schedule. No additional fees or expenses of Vendor shall be charged by Vendor nor be payable by City. The parties hereby agree that all compensable expenses of Vendor are shown on the Price Schedule. If there is a discrepancy on the Price Schedule between the unit price for an item, and the extended price, the unit price shall govern.

Amendments. Except where the terms of this contract expressly provide otherwise, any alterations, additions, or deletions to the terms hereof, shall be effected by amendment, in writing, executed by both City and Vendor. The Director of the Purchasing and General Services Department, or Director's designee, shall have authority to execute amendments on behalf of City without further action by the San Antonio City Council, subject to and contingent upon appropriation of funds for any increase in expenditures by City.

Termination.

Termination-Breach. Should vendor fail to fulfill in a timely and proper manner, as determined solely by the Director, its material obligations under this contract, or violate any of the material terms of this contract, City shall have the right to immediately terminate the contract in whole or in part. Notice of termination shall be provided in writing to the Vendor, effective upon the date set forth in the notice. City may, in City's sole discretion, provide an opportunity for Vendor to cure the default. If City elects to offer an opportunity to cure, City shall provide notice to Vendor specifying the matters in default and the cure period. If Vendor fails to cure the default within the cure period, City shall have the right, without further notice, to terminate the contract in whole or in part. Such termination shall not relieve Vendor of any liability to the City for damages sustained by virtue of any breach by Vendor.

Termination-Notice. City may terminate this contract, in whole or in part, without cause. City shall be required to give Vendor notice ten days prior to the date of termination of the contract without cause.

Termination-Funding. City retains the right to terminate this contract at the expiration of each of City's budget periods. This contract is conditioned on a best efforts attempt by City to obtain and appropriate funds for payment of any debt due by City herein.

Termination by City may be effected by Director, without further action by the San Antonio City Council.

Independent Contractor. Vendor covenants and agrees that it is an independent contractor and not an officer, agent, servant or employee of City. City shall not be liable for any claims which may be asserted by any third party occurring in connection with the services to be performed by Vendor under this contract and that Vendor has no authority to bind City. The doctrine of respondeat superior shall not apply as between City and Vendor.

INDEMNIFICATION.

VENDOR covenants and agrees to FULLY INDEMNIFY, DEFEND and HOLD HARMLESS, CITY and the elected officials, employees, officers, directors, volunteers and representatives of CITY, individually and collectively, from and against any and all costs, claims, liens, damages, losses, expenses, fees, fines, penalties, proceedings, actions, demands, causes of action, liability and suits of any kind and nature, including but not limited to, personal or bodily injury, death and property damage, made upon CITY directly or indirectly arising out of, resulting from or related to VENDOR'S activities under this Agreement, including any acts or omissions of VENDOR, any agent, officer, director, representative, employee, consultant or subcontractor of VENDOR, and their respective officers, agents employees, directors and representatives while in the exercise of the rights or performance of the duties under this Agreement. The indemnity provided for in this paragraph

shall not apply to any liability resulting from the negligence of CITY, it s officers or employees, in instances where such negligence causes personal injury, death, or property damage. IN THE EVENT VENDOR AND CITY ARE FOUND JOINTLY LIABLE BY A COURT OF COMPETENT JURISDICTION, LIABILITY SHALL BE APPORTIONED COMPARATIVELY IN ACCORDANCE WITH THE LAWS FOR THE STATE OF TEXAS, WITHOUT, HOWEVER, WAIVING ANY GOVERNMENTAL IMMUNITY AVAILABLE TO CITY UNDER TEXAS LAW AND WITHOUT WAIVING ANY DEFENSES OF THE PARTIES UNDER TEXAS LAW. In addition, Vendor agrees to indemnify, defend, and hold City harmless from any claim involving patent infringement, trademarks, trade secrets, and copyrights on goods supplied.

The provisions of this INDEMNITY are solely for the benefit of the parties hereto and not intended to create or grant any rights, contractual or otherwise, to any other person or entity. VENDOR shall advise CITY in writing within 24 hours of any claim or demand against CITY or VENDOR known to VENDOR related to or arising out of VENDOR's activities under this AGREEMENT and shall see to the investigation and defense of such claim or demand at VENDOR's cost. CITY shall have the right, at its option and at its own expense, to participate in such defense without relieving VENDOR of any of its obligations under this paragraph.

Assignment. Except as otherwise stated herein, Vendor may not sell, assign, pledge, transfer or convey any interest in this contract, nor delegate the performance of any duties hereunder, by transfer, by subcontracting or any other means, without the consent of Director. As a condition of such consent, if such consent is granted, Vendor shall remain liable for completion of the services and provision of goods outlined in this contract in the event of default by the successor vendor, assignee, transferee or subcontractor. Any attempt to transfer, pledge or otherwise assign this Contract without said written approval, shall be void ab initio and shall confer no rights upon any third person.

Ownership of Documents. Pursuant to Texas Local Government Code Chapter 201, any and all Records produced by Vendor pursuant to the provisions of this contract are the exclusive property of City; and no such Record shall be the subject of any copyright or proprietary claim by Vendor. The term "Record" as used herein shall mean any document, paper, letter, book, map, photograph, sound or video recording, microfilm, magnetic tape, electronic medium, or other information recording medium, regardless of physical form or characteristic. Vendor understands and acknowledges that as the exclusive owner of any and all such Records, City has the right to use all such Records as City desires, without restriction.

Records Retention.

Vendor and its subcontractors, if any, shall properly, accurately and completely maintain all documents, papers, and records, and other evidence pertaining to the services rendered hereunder ("Documents"), and shall make such Documents available to City at their respective offices, at all reasonable times and as often as City may deem necessary during the contract period, including any extension or renewal hereof, and the record retention period established herein, for purposes of audit, inspection, examination, and making excerpts or copies of same by City and any of its authorized representatives.

Vendor shall retain any and all Documents produced as a result of services provided hereunder for a period of four years ("Retention Period") from the date of termination of the contract. If, at the end of the Retention Period, there is litigation or other questions arising from, involving or concerning these Documents or the services provided hereunder, Vendor shall retain the records until the resolution of such litigation or other such questions. Vendor acknowledges and agrees that City shall have access to any and all such Documents at any and all times, as deemed necessary by City, during said Retention Period. City may, at its election, require Vendor to return the documents to City at Vendor's expense prior to or at the conclusion of the Retention Period. In such event, Vendor may retain a copy of the documents.

Vendor shall notify City, immediately, in the event Vendor receives any requests for information from a third party, which pertain to the Documents referenced herein. Vendor understands and agrees that City will process and handle all such requests.

Severability. If any clause or provision of this contract is held invalid, illegal or unenforceable under present or future federal, state or local laws, including but not limited to the City Charter, City Code, or ordinances of the City of San Antonio, Texas, then and in that event it is the intention of the parties hereto that such invalidity, illegality or unenforceability shall not affect any other clause or provision hereof and that the remainder of this contract shall be construed as if such invalid, illegal or unenforceable clause or provision was never contained herein. It is also the intention of the parties hereto that in lieu of each clause or provision of this contract that is invalid, illegal, or unenforceable, there be added as a part of the contract a clause or provision as similar in terms to such invalid, illegal or unenforceable clause or provision as may be possible, legal, valid and enforceable.

Compliance with Law. Vendor shall provide and perform all services required under this Agreement in compliance with all applicable federal, state and local laws, rules and regulations.

Certifications. Vendor warrants and certifies that Vendor and any other person designated to provide services hereunder has the requisite training, license and/or certification to provide said services, and meets all competence standards promulgated by all other authoritative bodies, as applicable to the services provided herein.

Non-waiver of Performance. Unless otherwise specifically provided for in this Agreement, a waiver by either Party of a breach of any of the terms, conditions, covenants or guarantees of this Agreement shall not be construed or held to be a waiver of any succeeding or preceding breach of the same or any other term, condition, covenant or guarantee herein contained. Further, any failure of either Party to insist in any one or more cases upon the strict performance of any of the covenants of this Agreement, or to exercise any option herein contained, shall in no event be construed as a waiver or relinquishment for the future of such covenant or option. In fact, no waiver, change, modification or discharge by either party hereto of any provision of this Agreement shall be deemed to have been made or shall be effective unless expressed in writing and signed by the party to be charged. No act or omission by a Party shall in any manner impair or prejudice any right, power, privilege, or remedy available to that Party hereunder or by law or in equity, such rights, powers, privileges, or remedies to be always specifically preserved hereby.

Venue. Venue of any court action brought directly or indirectly by reason of this contract shall be in Bexar County, Texas. This contract is made and is to be performed in Bexar County, Texas, and is governed by the laws of the State of Texas.

Non-discrimination. As a condition of entering into this agreement, Vendor represents and warrants that it will comply with City's Commercial Nondiscrimination Policy, as described under Section IILC.1 of the SBEDA Ordinance. As part of such compliance, Vendor shall not discriminate on the basis of race, color, religion, ancestry or national origin, sex, age, marital status, sexual orientation, or on the basis of disability or other unlawful forms of discrimination in the solicitation, selection, hiring or commercial treatment of subcontractors, vendors, suppliers, or commercial customers, nor shall Vendor retaliate against any person for reporting instances of such discrimination. Vendor shall provide equal opportunity for subcontractors, vendors and suppliers to participate in all of its public sector and private sector subcontracting and supply opportunities, provided that nothing contained in this clause shall prohibit or limit otherwise lawful efforts to remedy the effects of marketplace discrimination that have occurred or are occurring in City's Relevant Marketplace. Vendor understands and agrees that a material violation of this clause shall be considered a material breach of this agreement and may result in termination of this agreement, disqualification of Vendor from participating in City contracts, or other sanctions. This clause is not enforceable by or for the benefit of, and creates no obligation to, any third party. Vendor shall include this nondiscrimination clause in all subcontracts for the performance of this contract.

As a party to this contract, Vendor understands and agrees to comply with the *Non-Discrimination Policy* of the City of San Antonio contained in Chapter 2, Article X of the City Code and further, shall not discriminate on the basis of race, color, religion, national origin, sex, sexual orientation, gender identity, veteran status, age or disability, unless exempted by state or federal law, or as otherwise established herein.

Delinquent Taxes. In the event that Vendor is or subsequently becomes delinquent in the payment of taxes owed to the City of San Antonio, City reserves the right to deduct any delinquent taxes from payments that City may owe to the delinquent Vendor as a result of this contract.

Binding Contract. This contract shall be binding on and inure to the benefit of the parties hereto and their respective heirs, executors, administrators, legal representatives, and successors and assigns, except as otherwise expressly provided for herein.

Entire Agreement. This contract, including City's final electronically posted online version, together with its authorizing ordinance, and its price schedule(s), attachments, purchase orders, and exhibits, if any, constitutes the final and entire agreement between the parties hereto and contains all of the terms and conditions agreed upon. No other agreements, oral or otherwise, regarding the subject matter of this contract shall be deemed to exist or to bind the parties hereto, unless same be in writing, dated subsequent to the date hereof, and be duly executed by the parties, in accordance with the Amendment provision herein. **Parties agree that City's final electronically posted online version of this solicitation contains the agreed upon specifications, scope of services, and terms and conditions of this contract, and shall control in the event of a conflict with any printed version signed and submitted by Vendor.**

007 - SIGNATURE PAGE

By submitting an offer, whether electronically or by paper, Offeror represents that:

(s)he is authorized to bind Offeror to fully comply with the terms and conditions of City's Request for Offer for the prices stated therein;

(s)he has read the entire document, including the final version issued by City, and agreed to the terms therein;

Offeror is in good standing with the Texas State Comptroller's Office; and

to the best of his/her knowledge, all information is true and correct.

If submitting your offer by paper, complete the following and sign on the signature line below. Failure to sign and submit this Signature Page will result in rejection of your offer.

Offeror Information

Please Print or Type

Vendor ID No. _____

Signer's Name _____

Name of Business _____

Street Address _____

City, State, Zip Code _____

Email Address _____

Telephone No. _____

Fax No. _____

City's Solicitation No. _____

_____

Signature of Person Authorized to Sign Offer

008 - STANDARD DEFINITIONS

Whenever a term defined by the Uniform Commercial Code ("UCC"), as enacted by the State of Texas, is used in the Contract, the UCC definition shall control, unless otherwise defined in the Contract.

All-or-None Offer - an RFO in which City will award the entire contract to one offeror only.

Alternate Offer - two or more offers with substantive variations in the item or service offered from the same offeror in response to a solicitation.

Assignment - a transfer of claims, rights or interests in goods, services or property.

Bid Bond - security to ensure that Offeror (a) will not withdraw the offer within the period specified for acceptance, and (b) will furnish any required bonds and any necessary insurance within the time specified in the solicitation.

City - the City of San Antonio, a Texas home-rule municipal corporation.

Contractor - the offeror whose offer is accepted by City and is, therefore, the person, firm or entity providing goods or services to City under a contract.

Director – the Director of City's Purchasing & General Services Department, or Director's designee.

Line Item - a listing of items in an offer for which an offeror is expected to provide separate pricing.

Offer - a complete, signed response to an RFO that, if accepted, would bind Offeror to perform the resultant contract.

Offeror - a person, firm or entity that submits an offer in response to a solicitation. The offeror whose offer is accepted by City may also be referred to herein as Contractor, Vendor or Supplier.

Payment Bond - a particular form of security provided by the contractor to protect City against loss due to the contractor's failure to pay suppliers and subcontractors.

Performance Bond - a particular form of security provided by the contractor to protect City against loss due to the contractor's inability or unwillingness to complete the contract as agreed.

Performance Deposit - security provided by the contractor to protect City against loss due to the contractor's inability or unwillingness to complete the contract as agreed.

Pre-Submittal Conference - a meeting conducted by City, held in order to allow offerors to ask questions about the proposed contract and particularly, the contract specifications.

Purchase Order - a validly issued order placed by an authorized City department for the purchase of goods or services, written on City's standard purchase order form, and which is the vendor's authority to deliver to and invoice City for the goods or services specified in an RFO for the price stated in vendor's offer.

Specifications - a description of what City requires and what Offeror must offer; a description of the physical or functional characteristics of a product or material, or the nature of a service or construction item.

Subcontractor - a person, firm or entity providing goods or services to a vendor to be used in the performance of the vendor's obligations under the contract with City.

Supplier - the offeror whose offer is accepted by City and is, therefore, the person, firm or entity providing goods or services to City under a contract.

Vendor - the offeror whose offer is accepted by City and is, therefore, the person, firm or entity providing goods or services to City under a contract.

009 - ATTACHMENTS

ATTACHMENT A

PRICE SCHEDULE

ITEM	QUANTITY	DESCRIPTION
1	4 Each	Turnkey T300-370, CONV. CAB, SBFA, SRA Cab & Chassis with Bergkamp SP5 Spray Patcher Truck Body

PRICE EACH: $ _____

TOTAL: $ _____

YEAR, MAKE & MODEL CAB & CHASSIS OFFERED:

_____

CAB & CHASSIS WARRANTY:

_____

SPECIFIC MAKE & MODEL OF ENGINE OFFERED (INCLUDE SAE NET HP):

_____

ENGINE WARRANTY:

_____

SPECIFIC MAKE & MODEL OF TRANSMISSION OFFERED:

_____

TRANSMISSION WARRANTY:

_____

_____

CAB & CHASSIS WARRANTY SERVICE PROVIDER NAME:

_____

_____

CAB & CHASSIS WARRANTY FACILITY ADDRESS:

_____

_____

YEAR, MAKE & MODEL OF SPRAY POTHOLE PATCHER OFFERED:

_____

YEAR, MAKE & MODEL OF SPRAY POTHOLE PATCHER BODY OFFERED:

_____

SPRAY POTHOLE PATCHER BODY WARRANTY:

_____

_____

SPRAY POTHOLE PATCHER BODY PROVIDER NAME:

_____

_____

SPRAY POTHOLE PATCHER BODY FACILITY ADDRESS:

_____

_____

PRODUCTION CUT-OFF DATE: _____.

INDICATE THE LAST DAY THAT THE CITY CAN PLACE ORDERS UNDER THIS CONTRACT WITHOUT MISSING THE PRODUCTION CUT-OFF DATE: _____.

BID PRICES SHALL REMAIN FIRM FOR ALL ORDERS PLACED PRIOR TO THIS CUT-OFF DATE. IN THE EVENT THAT CITY DOES NOT AWARD A CONTRACT PRIOR TO PRODUCTION CUT-OFF DATE, CAN BIDDER PROVIDE BID ITEMS, AT THE BID PRICE SUBMITTED, AFTER THE PRODUCTION CUT-OFF DATE? _____?

Prompt Payment Discount: _____% _____ days. (If no discount is offered, Net 30 will apply.)

ITEM	QUANTITY	DESCRIPTION
2	1	COOPERATIVE FEE

COOPERATIVE FEE EACH: $ _____

TOTAL COOPERATIVE FEE: $ _____

Prompt Payment Discount:_____%_____days. (If no discount is offered, Net 30 will apply.)

OFFEROR MUST SUBMIT HGAC CONTRACT PRICING WORKSHEET(S) SUPPORTING ALL PRICING.

ATTACHMENT B

City of San Antonio

Veteran-Owned Small Business Program Tracking Form

Authority. The City of San Antonio Veteran-Owned Small Business Preference Program Ordinance 2013-12-05-0864 adopted a veteran-owned small business preference program for specific contracting categories for solicitations issued after January 15, 2014.

Tracking. This solicitation is not eligible for a preference based on status as a veteran-owned small business (VOSB). Nevertheless, in order to determine whether the program can be expanded at a later date, the City tracks VOSB participation at both prime contract and subcontract levels.

Certification. The City relies on inclusion in the database of veteran-owned small businesses (VOSB) maintained by the U.S. Small Business Administration to verify VOSB status; however, veteran status may also be confirmed by certification by another public or private entity that uses similar certification procedures.

Definitions. The program uses the federal definitions of veteran and veteran-owned small business found in 38 CFR Part 74.

- The term "veteran" means a person who served on active duty with the U.S. Army, Air Force, Navy, Marine Corps, Coast Guard, for any length of time and at any place and who was discharged or released under conditions other than dishonorable. Reservists or members of the National Guard called to federal active duty or disabled from a disease or injury incurred or aggravated in line of duty or while in training status.

- A veteran-owned small business is a business that is not less than 51 percent owned by one or more veterans, or in the case of any publicly owned business, not less than 51 percent of the stock of which is owned by one or more veterans; the management and daily business operations of which are controlled by one or more veterans and qualifies as "small" for Federal business size stand purposes.

The program does not distinguish between a veteran and a service-disabled veteran-owned business and is not limited geographically.

COMPLETE THE FOLLOWING FORM AND SUBMIT IT WITH YOUR BID/PROPOSAL.

City of San Antonio

Veteran-Owned Small Business Program Tracking Form

SOLICITATION NAME/NUMBER: _____

Name of Respondent:		
Physical Address:		
City, State, Zip Code:		
Phone Number:		
Email Address:		
Is Respondent certified as a VOSB with the U.S. Small Business Administration? (circle one)	Yes	No
If yes, provide the SBA Certification #		
If not certified by the SBA, is Respondent certified as a VOSB by another public or private entity that uses similar certification procedures? (circle one)	Yes	No
If yes, provide the name of the entity who has certified Respondent as a VOSB. Include any identifying certification numbers.		
Participation Dollar Amount		

Is Respondent subcontracting with a business that is certified as a VOSB? (circle one)	Yes	No
Name of **SUBCONTRACTOR** Veteran-Owned Small Business:		
Physical Address:		
City, State, Zip Code:		
Phone Number:		
Email Address:		
Is **SUBCONTRACTOR** certified as a VOSB with the U.S. Small Business Administration? (circle one)	Yes	No
If yes, provide the SBA Certification #		
If not certified by the SBA, is **SUBCONTRACTOR** certified as a VOSB by another public or private entity that uses similar certification procedures? (circle one)	Yes	No
If yes, provide the name of the entity who has certified **SUBCONTRACTOR** as a VOSB. Include any identifying certification numbers.		
Participation Dollar Amount		

City of San Antonio

Veteran-Owned Small Business Program Tracking Form

ACKNOWLEDGEMENT

THE STATE OF TEXAS

I certify that my responses and the information provided on Veteran-Owned Small Business Program Tracking Form are true and correct to the best of my personal knowledge and belief and that I have made no willful misrepresentations on this form, nor have I withheld any relevant information in my statements and answers to questions. I am aware that any information given by me on this Veteran-Owned Small Business Program Tracking Form may be investigated and I hereby give my full permission for any such investigation. I fully acknowledge that any misrepresentations or omissions in my responses and information may cause my offer to be rejected.

BIDDER/RESPONDENT'S FULL NAME:

_____

(Print Name) Authorized Representative of Bidder/Respondent

_____

(Signature) Authorized Representative of Bidder/Respondent

_____

Title

_____

Date

This Veteran-Owned Small Business Program Tracking Form must be submitted with the Bidder/Respondent's bid/proposal.

007 - SIGNATURE PAGE

By submitting an offer, whether electronically or by paper, Offeror represents that:

(s)he is authorized to bind Offeror to fully comply with the terms and conditions of City's Request for Offer for the prices stated therein;

(s)he has read the entire document, including the final version issued by City, and agreed to the terms therein;

Offeror is in good standing with the Texas State Comptroller's Office; and

to the best of his/her knowledge, all information is true and correct.

If submitting your offer by paper, complete the following and sign on the signature line below. Failure to sign and submit this Signature Page will result in rejection of your offer.

Offeror Information

Please Print or Type

Vendor ID No. 10017861

Signer's Name Jason W. Mims

Name of Business French Ellison Truck Center

Street Address 9010 IH 10 East

City, State, Zip Code Converse, TX 78109

Email Address jason.mims@frenchellison.com

Telephone No. 210.228.2028

Fax No. 210.662.5999

City's Solicitation No. 6100006977

Signature of Person Authorized to Sign Offer

008 - STANDARD DEFINITIONS

Whenever a term defined by the Uniform Commercial Code ("UCC"), as enacted by the State of Texas, is used in the Contract, the UCC definition shall control, unless otherwise defined in the Contract.

All-or-None Offer - an RFO in which City will award the entire contract to one offeror only.

Alternate Offer - two or more offers with substantive variations in the item or service offered from the same offeror in response to a solicitation.

Assignment - a transfer of claims, rights or interests in goods, services or property.

Bid Bond - security to ensure that Offeror (a) will not withdraw the offer within the period specified for acceptance, and (b) will furnish any required bonds and any necessary insurance within the time specified in the solicitation.

City - the City of San Antonio, a Texas home-rule municipal corporation.

Contractor - the offeror whose offer is accepted by City and is, therefore, the person, firm or entity providing goods or services to City under a contract.

Director – the Director of City's Purchasing & General Services Department, or Director's designee.

Line Item - a listing of items in an offer for which an offeror is expected to provide separate pricing.

Offer - a complete, signed response to an RFO that, if accepted, would bind Offeror to perform the resultant contract.

Offeror - a person, firm or entity that submits an offer in response to a solicitation. The offeror whose offer is accepted by City may also be referred to herein as Contractor, Vendor or Supplier.

Payment Bond - a particular form of security provided by the contractor to protect City against loss due to the contractor's failure to pay suppliers and subcontractors.

Performance Bond - a particular form of security provided by the contractor to protect City against loss due to the contractor's inability or unwillingness to complete the contract as agreed.

Performance Deposit - security provided by the contractor to protect City against loss due to the contractor's inability or unwillingness to complete the contract as agreed.

Pre-Submittal Conference - a meeting conducted by City, held in order to allow offerors to ask questions about the proposed contract and particularly, the contract specifications.

Purchase Order - a validly issued order placed by an authorized City department for the purchase of goods or services, written on City's standard purchase order form, and which is the vendor's authority to deliver to and invoice City for the goods or services specified in an RFO for the price stated in vendor's offer.

Specifications - a description of what City requires and what Offeror must offer; a description of the physical or functional characteristics of a product or material, or the nature of a service or construction item.

Subcontractor - a person, firm or entity providing goods or services to a vendor to be used in the performance of the vendor's obligations under the contract with City.

Supplier - the offeror whose offer is accepted by City and is, therefore, the person, firm or entity providing goods or services to City under a contract.

Vendor - the offeror whose offer is accepted by City and is, therefore, the person, firm or entity providing goods or services to City under a contract.

009 - ATTACHMENTS

ATTACHMENT A

PRICE SCHEDULE

ITEM	QUANTITY	DESCRIPTION
1	4 Each	**Turnkey T300-370, CONV. CAB, SBFA, SRA Cab & Chassis with Bergkamp SP5 Spray Patcher Truck Body**

PRICE EACH: $ 216,503.00

TOTAL: $ 866,012.00

YEAR, MAKE & MODEL CAB & CHASSIS OFFERED:

2017 Kenworth K370

CAB & CHASSIS WARRANTY:

1yr / 100k miles

SPECIFIC MAKE & MODEL OF ENGINE OFFERED (INCLUDE SAE NET HP):

Paccar PX-7

ENGINE WARRANTY:

2yrs / Unlimited miles

SPECIFIC MAKE & MODEL OF TRANSMISSION OFFERED:

Allison 2500 RDS

TRANSMISSION WARRANTY:

2yrs / Unlimited miles

CAB & CHASSIS WARRANTY SERVICE PROVIDER NAME:

French Ellison Truck Center

CAB & CHASSIS WARRANTY FACILITY ADDRESS:

9010 IH 10 East

Converse, TX 78109

YEAR, MAKE & MODEL OF SPRAY POTHOLE PATCHER OFFERED:

2016 Bergkamp SP5 Spray Injection Patcher

YEAR, MAKE & MODEL OF SPRAY POTHOLE PATCHER BODY OFFERED:

2016 Bergkamp SPS Spray Injection Patcher

SPRAY POTHOLE PATCHER BODY WARRANTY:

1yr / see attachment

SPRAY POTHOLE PATCHER BODY PROVIDER NAME:

Kinloch Equipment + Supply

SPRAY POTHOLE PATCHER BODY FACILITY ADDRESS:

12100 Crown Point Dr.

San Antonio, TX 78233

DELIVERY: Delivery shall be made within 180 calendar days after issuance of purchase order.

PRODUCTION CUT-OFF DATE: 05/01/16.

INDICATE THE LAST DAY THAT THE CITY CAN PLACE ORDERS UNDER THIS CONTRACT WITHOUT MISSING THE PRODUCTION CUT-OFF DATE: 05/01/2016.

BID PRICES SHALL REMAIN FIRM FOR ALL ORDERS PLACED PRIOR TO THIS CUT-OFF DATE. IN THE EVENT THAT CITY DOES NOT AWARD A CONTRACT PRIOR TO PRODUCTION CUT-OFF DATE, CAN BIDDER PROVIDE BID ITEMS, AT THE BID PRICE SUBMITTED, AFTER THE PRODUCTION CUT-OFF DATE? NO?

Prompt Payment Discount: Ø % Ø days. (If no discount is offered, Net 30 will apply.)

ITEM	QUANTITY	DESCRIPTION
2	1	COOPERATIVE FEE

COOPERATIVE FEE EACH: $ 1,500.00

TOTAL COOPERATIVE FEE: $ 1,500.00

Prompt Payment Discount: Ø % Ø days. (If no discount is offered, Net 30 will apply.)

OFFEROR MUST SUBMIT HGAC CONTRACT PRICING WORKSHEET(S) SUPPORTING ALL PRICING.

ATTACHMENT B

City of San Antonio

Veteran-Owned Small Business Program Tracking Form

Authority. The City of San Antonio Veteran-Owned Small Business Preference Program Ordinance 2013-12-05-0864 adopted a veteran-owned small business preference program for specific contracting categories for solicitations issued after January 15, 2014.

Tracking. This solicitation is not eligible for a preference based on status as a veteran-owned small business (VOSB). Nevertheless, in order to determine whether the program can be expanded at a later date, the City tracks VOSB participation at both prime contract and subcontract levels.

Certification. The City relies on inclusion in the database of veteran-owned small businesses (VOSB) maintained by the U.S. Small Business Administration to verify VOSB status; however, veteran status may also be confirmed by certification by another public or private entity that uses similar certification procedures.

Definitions. The program uses the federal definitions of veteran and veteran-owned small business found in 38 CFR Part 74.

- The term "veteran" means a person who served on active duty with the U.S. Army, Air Force, Navy, Marine Corps, Coast Guard, for any length of time and at any place and who was discharged or released under conditions other than dishonorable. Reservists or members of the National Guard called to federal active duty or disabled from a disease or injury incurred or aggravated in line of duty or while in training status.

- A veteran-owned small business is a business that is not less than 51 percent owned by one or more veterans, or in the case of any publicly owned business, not less than 51 percent of the stock of which is owned by one or more veterans; the management and daily business operations of which are controlled by one or more veterans and qualifies as "small" for Federal business size stand purposes.

The program does not distinguish between a veteran and a service-disabled veteran-owned business and is not limited geographically.

COMPLETE THE FOLLOWING FORM AND SUBMIT IT WITH YOUR BID/PROPOSAL.

City of San Antonio

Veteran-Owned Small Business Program Tracking Form

SOLICITATION NAME/NUMBER: 6100006977

Name of Respondent:	French Ellison Truck Center	
Physical Address:	9010 IH 10 East	
City, State, Zip Code:	Converse, TX 78109	
Phone Number:	210-223-2028	
Email Address:		
Is Respondent certified as a VOSB with the U.S. Small Business Administration? (circle one)	Yes	No
If yes, provide the SBA Certification #		
If not certified by the SBA, is Respondent certified as a VOSB by another public or private entity that uses similar certification procedures? (circle one)	Yes	No
If yes, provide the name of the entity who has certified Respondent as a VOSB. Include any identifying certification numbers.		
Participation Dollar Amount		

Is Respondent subcontracting with a business that is certified as a VOSB? (circle one)	Yes	No
Name of **SUBCONTRACTOR** Veteran-Owned Small Business:		
Physical Address:		
City, State, Zip Code:		
Phone Number:		
Email Address:		
Is **SUBCONTRACTOR** certified as a VOSB with the U.S. Small Business Administration? (circle one)	Yes	No
If yes, provide the SBA Certification #		
If not certified by the SBA, is **SUBCONTRACTOR** certified as a VOSB by another public or private entity that uses similar certification procedures? (circle one)	Yes	No
If yes, provide the name of the entity who has certified **SUBCONTRACTOR** as a VOSB. Include any identifying certification numbers.		
Participation Dollar Amount		

City of San Antonio

Veteran-Owned Small Business Program Tracking Form

ACKNOWLEDGEMENT

THE STATE OF TEXAS

I certify that my responses and the information provided on Veteran-Owned Small Business Program Tracking Form are true and correct to the best of my personal knowledge and belief and that I have made no willful misrepresentations on this form, nor have I withheld any relevant information in my statements and answers to questions. I am aware that any information given by me on this Veteran-Owned Small Business Program Tracking Form may be investigated and I hereby give my full permission for any such investigation. I fully acknowledge that any misrepresentations or omissions in my responses and information may cause my offer to be rejected.

BIDDER/RESPONDENT'S FULL NAME:

Jason W. Mims

(Print Name) Authorized Representative of Bidder/Respondent

(Signature) Authorized Representative of Bidder/Respondent

Account Manager

Title

12/23/15

Date

This Veteran-Owned Small Business Program Tracking Form must be submitted with the Bidder/Respondent's bid/proposal.

KENWORTH

French Ellison Truck Center F428
9010 IH-10 East

Converse, Texas United States 78109
Phone: (210) 662-9333
Fax:
Email: jason.mims@frenchellison.com

HGAC Buy – CITY OF SAN ANTONIO
P.O. Box 22777

Houston, Texas United States 77227
Phone: (210) 657-5154
Fax:
Contact Email:
Prepared for:

Vehicle Summary

Unit

Model:	K3 Series Medium Duty COE
Type:	FULL TRUCK
Description:	Bergkamp

Application

Intended Serv.:	Construction. Vehicles used in the construction
Commodity:	Asphalt

Body

Type:	Tank
Length (ft):	16.0
Height (ft):	13.5
Max Laden Weight (lbs):	5000

Trailer

No. of Trailer Axles:	
Type:	
Length (ft):	
Height (ft):	
Kingpin Inset (in):	
Corner Radius (in):	

Restrictions

Length (ft):	
Width (in):	
Height (ft):	

Chassis

Fr Axle Load (lbs):	12000
Rr Axle Load (lbs)	21000
G.C.W. (lbs):	33000
Road Conditions:	
Class A (Highway)	90
Class B (Hwy/Mtn)	10
Class C (Off-Hwy)	00
Class D (Off-Road)	00
Maximum Grade:	6
Wheelbase (in):	146
Overhang (in):	72
Fr Axle to BOC (in):	11
Cab to Axle (in):	135
Cab to EOF (in):	207
Overall Comb. Length (in):	270

Special Req.

U.S. Domestic Registry, 50-State

Approved by: _____ **Date:** _____

Note: All sales are F.O.B. designated plant of manufacture.

PACCAR FINANCIAL

Ask your dealer for a quote today, or visit our website @ www.paccarfinancial.com.

PACCAR Financial offers innovative finance, lease and insurance programs customized to meet your needs.

Unpublished options may require review/approval.
Dimensional and performance data for unpublished options may vary from that displayed in PROSPECTOR.

Printed:	12/2/2015 8:45:58 AM	***Complete***	Model Number:	K3 Series Medium Duty COE
Effective Date:	Jul 1, 2015		Quote/DTPO/CO:	Q74542538
Prepared by:	Jason Mims		Version Number:	36.22

KENWORTH

French Ellison Truck Center F428
9010 IH-10 East

Converse, Texas United States 78109
Phone: (210) 662-9333
Fax:
Email: jason.mims@frenchellison.com

HGAC Buy
P.O. Box 22777

Houston, Texas United States 77227
Phone: (210) 657-5154
Fax:
Contact Email:
Prepared for:

	Description	Weight
Model		
	K3 Series Medium Duty COE	9,850
	K370 Class 7 Medium Duty COE	0
	LFNA, EURO 6, LHD, HI-HP, US REGISTRY	0
	CARB Idle Emissions Reduction Feature for PX-7 and PX-9	0
	Medium-duty 4x2 automatic.	0
	Asphalt	0
	Construction. Vehicles used in the construction industry, other than those listed above. Use typically involves operating on the jobsite, to pick up or deliver construction materials, or to position the vehicle for its intended use at the construction site. Includes such activities as delivery of precast concrete, concrete pumpers, flatbeds or roll-offs for delivery of construction materials or equipment, etc. Typically includes some operation off of paved roads. Road usage: any combination, which includes some Class C.	0
	Tank	0
	U.S. Domestic Registry, 50-State	0
Engine & Equipment		
	PACCAR PX-7 220 2013 220@2400 215@2600 520@1600. Includes turbo exhaust brake, no code is used. Diagnostic Plug for data link, Oil Cooler, Aluminum Flywheel Housing. N09020 P02 Yes..Cruise Control Auto Resume N09040 P04 No...Auto Engine Brake in Cruise N09060 P06 No...Gear Down Protection N09100 P11 Yes..Engine Protection Shtdwn N09120 P14 80...Max Vehicle Speed in Top Gear N09140 P19 80...Max Cruise Control Speed N09160 P26 1400.Max PTO Speed N09180 P10 No...Idle Shtdwn N09200 P32 5....Idle Shtdwn Time N09220 P33 Yes..Idle Shtdwn Override	0
	Prospector Version 37.0 Replaces 36.2	0
	Air compressor: Cummins 18.7 CFM, Cummins, PACCAR PX engines.	0
	Air cleaner - Fender Mtd RH BOC	0

Unpublished options may require review/approval.
Dimensional and performance data for unpublished options may vary from that displayed in PROSPECTOR.

Printed:	12/2/2015 8:45:58 AM	*Complete*	Model Number:	K3 Series Medium Duty COE
Effective Date:	Jul 1, 2015		Quote/DTPO/CO:	Q74542538
Prepared by:	Jason Mims		Version Number:	36.22

Description	Weight
Air Intake: High	0
Cooling Module	0
Horizontal crossover DPF/SCR for PX-6/7 w/ horizontal tailpipe below LH rail.	0
Fuel filter PACCAR PX-7 engines and Cummins ISB Euro 3 Unheated.	0
Alternator: Bosch 160 amp, brush type only.	0
Batteries: 2 PACCAR GP31 threaded post (1000) 2000 CCA starting.	-6
Starter: Delco 12V 29MT	0
Battery Disconnect Switch: 1 Battery box locking	0
Transmission & Clutch	
Transmission: Allison 2500RDS 6-speed w/PTO drive gear. 5th Gen controls. Includes heat exchanger. Rugged Duty Series for vocational applications. Transynd transmission fluid is standard on all Allison 1000, 2000, 3000 & 4000 series transmissions.	0
Driveline: 2 SPL100 1 centerbearing light duty.	0
Torque converter included w/Allison Transmission.	0
Delete Allison FuelSense	0
Front Axle & Equipment	
Dana Spicer E-1202I Front Axle rated 12K 3-1/2in. drop.	0
Front brakes included w/ front hub package.	0
12,000 lb. Air brake package; drum brakes, iron 10-bolt hub piloted hubs.	0
12,000 lb. front spring suspension with shock absorbers	0
12,000 lb. capacity single power steering gear	0
Rear Axle & Equipment	
Single Dana Spicer P22060S single reduction rear axle. T300/K300: use with/air brakes. Single rear axle 22K capacity rated at 21K.	0
Rear Axle Ratio - 5.29.	0
Single rear brakes included w/rear hub package.	0
21,000 lb. Air Brake Pkg includes 16.5x7 in. brakes, cast drums, iron 10-Bolt hub pilot hubs, slack adjusters & oil seals for use with 22.5 wheels.	0
Spring brakes	0

Unpublished options may require review/approval.
Dimensional and performance data for unpublished options may vary from that displayed in PROSPECTOR.

Printed:	12/2/2015 8:45:58 AM	***Complete***	Model Number:	K3 Series Medium Duty COE
Effective Date:	Jul 1, 2015		Quote/DTPO/CO:	Q74542538
Prepared by:	Jason Mims		Version Number:	36.22

	Description	Weight
	Wabco Electronic Brake System (EBS) w/anti-lock system. 4S/4M *FR WHL+2 GRP RR WHL. K270/K370 only.	0
	Rear suspension: single Reyco 79KB taperleaf 21K. Medium-duty. Unladen Height: 9 in. Laden Height: 7.5 in. Not rear air disc brake compatible.	0
	Rear shock absorbers for Reyco 79KB.	35
Tires & Wheels		
	Front tires: Bridgestone R268ECOPIA 11R22.5 14PR. 41.5 in. diameter, all position. F-side wall protector bar. 19.3 in. SLR. For P&D & construction vocations. Smartway certified.	0
	Rear tires: Bridgestone M710ECOPIA 11R22.5 14PR. 41.8 in. diameter, drive. 19.5 in. SLR. Smartway certified. Code is priced per pair of tires.	0
	Rear Tire Quantity: 4	0
	Front wheel: Accuride 50487 22.5x8.25 steel Steel Armor[TM] powder coat, hub pilot mount. 7400lb. maximum rating. 5-hand hole. Air disc brake compatible.	0
	Rear wheel: Accuride 50487 22.5x8.25 steel Steel Armor[TM] powder coat, hub pilot mount. 7400lb. maximum rating. 5-hand hole. Air disc brake compatible. Code is priced per pair of wheels.	0
	Powder coat white steel wheel. Use in conjunction with front, dual front, rear, spare or lift axle wheel code(s). All wheels on chassis must have same finish color.	0
	Rear Wheel/Rim Quantity: 4	0
Frame & Equipment		
	Frame Rail: 10-1/4 in. steel to 414 in. The results of the engineering review may result in a change to the requested frame rail. If a change is required Kenworth Application Engineering will advise the dealer of the appropriate material specification for a substitute rail.	0
	146 inch wheelbase.	0
	Bumper: Steel painted gray.	0
	Steel space saver battery box, right hand back of cab.	0
	Battery box location: RH Side.	0
	Square End-of-Frame without crossmember.	0
Fuel Tanks & Equip		
	Fuel Tank: 45 US gallon rectangular steel BOC replace.	0
	Rectangular DEF tank. 7.5 gallons of useable volume. The tank will be located just forward of the under cab component on the side you specified. Standard capacity is calculated by fuel capacity of the vehicle and will accommodate two diesel fill-ups for every DEF fill-up. For 1:1 DEF fuel fill ratio, add 7889204.	0

Unpublished options may require review/approval.
Dimensional and performance data for unpublished options may vary from that displayed in PROSPECTOR.

Printed:	12/2/2015 8:45:58 AM	***Complete***	Model Number:	K3 Series Medium Duty COE
Effective Date:	Jul 1, 2015		Quote/DTPO/CO:	Q74542538
Prepared by:	Jason Mims		Version Number:	36.22

	Description	Weight
	DEF tank location is on the LH.	0
	Location: 45 gal fuel tank LH behind cab	0
Cab & Equipment		
	Steel Cab: BBC 63.4in Non-Slpr LHD With WABCO EBS Steel 63.4 in. BBC, COE, Left Hand Drive, with the following; Daycab rear window with tinted safety glass throughout, Electric windshield wipers with intermittent feature, Electric-Powered LH & RH window lifts with switch located on door pad, Heated driving mirrors LH and RH with convex mirror over RH door, High level grey interior trim, Rubber floor mats, Combo fresh air heater and air conditioner, Smartwheel - 18 in. black four-spoke soft touch steering wheel with adjustable tilt steering column, Electric horn, 12V Cigar lighter with ash tray, Driver and Passenger seats, Console mounted push button transmission controls and backwall storage. Includes WABCO EBS.	0
	Heater And Air Conditioner	0
	Dual Scale Speedometer MPH Over KPH Includes: Speedometer with clock and outside air temperature display, Water Temperature Gauge, Fuel Level Gauge, Dual Air Pressure Gauges, DEF Level Gauge, and Visual & Audible System Warnings	0
	Interior: Gray	0
	Drivers Seat: Sears C2 Air, High Back Fabric	0
	RD Seat: Sears C2 Air, HB Fabric	-34
	Kenworth Radio with AM/FM/WB/USB and Bluetooth	0
	Dual Heated and Motorized Mirrors. Includes 2 convex mirrors and 1 downward looking mirror on passenger side.	0
	Rear Cab Stationary Window 17 in. x 36 in.	0
Lights & Instruments		
	Headlamps: Halogen Projector Low Beam, Halogen Complex Reflector High Beam	0
	Turn Signal	0
	External Lights – Fog / Driving Lights	0
	Combination Stop, Tail, Turn & Backup Lights RH & LH.	0
	Daytime Running Lamps.	0
	Electric Backup Alarm: Meets SAE J994 & OSHA requirements.	0
Air Equipment		
	Air Dryer: WABCO SS1200 Plus without Multi Port PPV	0

Unpublished options may require review/approval.
Dimensional and performance data for unpublished options may vary from that displayed in PROSPECTOR.

Printed:	12/2/2015 8:45:58 AM	***Complete***	Model Number:	K3 Series Medium Duty COE
Effective Date:	Jul 1, 2015		Quote/DTPO/CO:	Q74542538
Prepared by:	Jason Mims		Version Number:	36.22

	Description	Weight
Extended Warranty		
	Medium-duty Warranty: 1-year/unlimited mi.	0
Miscellaneous		
		0
Paint		
	Paint color number.	0
	K270/K370 Paint Color M8870 Ice White	0
	1 - Color Paint - Day Cab Color will be White if no other color is specified.	0
Total Weight		9845

Prices and Specifications Subject to Change Without Notice.

Unpublished options may require review/approval.
Dimensional and performance data for unpublished options may vary from that displayed in PROSPECTOR.

Printed:	12/2/2015 8:45:58 AM	***Complete***	Model Number:	K3 Series Medium Duty COE
Effective Date:	Jul 1, 2015		Quote/DTPO/CO:	Q74542538
Prepared by:	Jason Mims		Version Number:	36.22

KENWORTH TRUCK COMPANY LIMITED WARRANTY AGREEMENT

Medium Duty Warranty
UNITED STATES

THIS LIMITED WARRANTY AGREEMENT ("AGREEMENT") LISTS THE RESPECTIVE RIGHTS AND RESPONSIBILITIES OF YOU, KENWORTH TRUCK COMPANY ("KENWORTH"), AND THE SELLING KENWORTH DEALER ("SELLING DEALER"). PLEASE READ THIS LIMITED WARRANTY CAREFULLY.

Kenworth warrants directly to you that the Kenworth vehicle ("Vehicle") identified below will be free from defects in materials and factory workmanship ("Warrantable Failures") appearing under normal commercial use and service during the time or mileage limitations set forth in the attached Warranty Schedule (dated 11/09). The Vehicle warranty extends only to you, the First Purchaser.

YOUR SOLE AND EXCLUSIVE REMEDY AGAINST KENWORTH AND THE SELLING DEALER ARISING FROM YOUR PURCHASE AND USE OF THIS VEHICLE IS LIMITED TO THE REPAIR OR REPLACEMENT OF "WARRANTABLE FAILURES" AT AUTHORIZED UNITED STATES AND CANADIAN KENWORTH DEALERS, SUBJECT TO KENWORTH'S TIME AND MILEAGE LIMITATIONS LISTED IN THE ATTACHED VEHICLE ONLY WARRANTY SCHEDULE. The maximum time and mileage limitations in the Warranty Schedule begin on the Date of Delivery to the First Purchaser, as shown below. The accrued time and mileage is calculated when this Vehicle is brought into an Authorized Dealer for correction of Warrantable Failures.

WARRANTY DISCLAIMER AND LIMITATIONS OF LIABILITY

This limited warranty is the sole warranty made by Kenworth and the Selling Dealer. Except for the above limited warranty, Kenworth and the Selling Dealer make no other warranties, express or implied. KENWORTH AND THE SELLING DEALER EXPRESSLY DISCLAIM ANY WARRANTY OF MERCHANTABILITY OR FITNESS FOR A PARTICULAR PURPOSE.

IT IS AGREED THAT KENWORTH AND THE SELLING DEALER SHALL NOT BE LIABLE FOR INCIDENTAL OR CONSEQUENTIAL DAMAGES INCLUDING, BUT NOT LIMITED TO: LOSS OF INCOME OR LOST PROFITS; VEHICLE DOWNTIME; THIRD PARTY DAMAGE, INCLUDING DAMAGE OR LOSS TO OTHER VEHICLES OR PROPERTY, ATTACHMENTS, TRAILERS AND CARGO; LOSS OR DAMAGE TO PERSONAL CONTENTS; COMMUNICATION EXPENSES; LODGING AND/OR MEAL EXPENSES; FINES; APPLICABLE TAXES OR BUSINESS COSTS OR LOSSES; ATTORNEY'S FEES; AND ANY LIABILITY YOU MAY HAVE IN RESPECT TO ANY OTHER PERSON OR ENTITY.

The following components may be warranted directly to you by their respective manufacturers and are NOT warranted by Kenworth: engine and engine accessories, Allison automatic transmission, fifth wheel, tires, wheels and rims, tubes, pintle hook, hitch, batteries not listed in the Vehicle Schedule, trade accessories (such as fire extinguishers, chains, emergency kits, and tools), and items not installed by the Kenworth factory at the time of the Vehicle's manufacture.

Kenworth does not warrant antifreeze, lubricants, bulbs, fuses, filters, mud-flaps, winter front, wiper nozzles, wiper blades, filter elements, or any other part which is considered a maintenance item.

You are responsible for the safe operation and maintenance of the Vehicle, as specified in the applicable Operator's Manuals. You are responsible for providing proof that all recommended inspections and maintenance have been performed. Before the expiration of the applicable warranty, you must notify an Authorized Dealer of any Warrantable Failures and make the Vehicle available for repair by such Authorized Dealer. You are responsible for delivery of the Vehicle to the Authorized Dealer. Locations in the United States and Canada of authorized Kenworth dealers may be found on WWW.KENWORTH.COM.

KENWORTH IS NOT RESPONSIBLE FOR WEAR AND TEAR OR WEAROUT OF COVERED PARTS, storage deterioration, or changes in adjustment resulting from your use of the Vehicle. This includes, but is not limited to, wear or damage to brake and clutch linings, clutch brake, belts, upholstery, wheel balancing or axle alignment. This list is offered as an example only and shall not be construed as all inclusive.

Kenworth does not warrant metallic chassis (frame) paint. Kenworth is not responsible for paint chipping or fading, peeling paint from frame bolts relating to maintenance, paint peeling from road chemical or salt damage, or corrosion caused by damage to a cab or hood panel or to finish paint.

Damage due to accident, misuse, abuse, neglect, negligence, improper or insufficient maintenance, or unauthorized modification is not warranted.

All warranties are null and void should a Vehicle be converted to a motor coach, motor home, or recreational vehicle.

Vibrations, squeaks, loose fitting and hose leaks, unusual noises, rattles, loose nuts/bolts and hose/electrical connections can develop during the early use of the vehicle. Kenworth will make the necessary adjustments under warranty up to the earlier of the first 25,000 miles or the first 90 days after the Date of Delivery.

Parts used to repair a Warrantable Failure may be new parts, approved remanufactured parts, or repaired parts. Kenworth is not responsible for failures resulting from the use of parts not approved by Kenworth. A new or approved remanufactured part used to repair a Warrantable Failure assumes the identity of the part it has replaced and is entitled to the remaining warranty coverage, if any.

Chassis Number(s) (17-digit VIN)

Customer Initials_____

KENWORTH TRUCK COMPANY
Medium Duty Warranty Schedule
UNITED STATES
VEHICLE ONLY

THIS VEHICLE WARRANTY SCHEDULE APPLIES ONLY TO ORIGINAL FACTORY EQUIPMENT AND IS SUBJECT TO THE TERMS AND LIMITATIONS IN THE ATTACHED LIMITED WARRANTY AGREEMENT. Pursuant to the terms of the attached Limited Warranty Agreement, Kenworth Truck Company will pay warranty claims for Warrantable Failures within the following maximum limits in time or mileage, whichever shall occur first. The Warrantable Failure must be brought to the attention of an Authorized Dealer within 30 days of discovery.

	MONTHS	MILES
Basic Vehicle This coverage applies to the basic highway vehicle, except for additional coverage and warranty exclusions below.	12	Unlimited
Major Components Eaton, Meritor & Dana Spicer front axle, beam, spindles, kingpin & kingpin bushings. Eaton, Meritor & Dana Spicer rear axle, differential assembly, axle shafts & axle housing. Manual transmissions, gears, shafts, case & bell housing. Eaton auto shift. Bendix and Meritor brakes, brackets, cam shafts, spiders and slack adjusters (excludes Air Disc Brakes).	24	Unlimited
Eaton Hybrid Components Hybrid Drive Unit (HDU) with Motors and Electronic Actuator (ECU), Electronic Clutch Actuator (ECA), Power Electronic Carrier (PEC), including batteries, Inverter, Hybrid Control Module (HCM), DC/DC Converter (in Utility Application Only), Auxiliary Power Generator Kit (APG) (in Utility Application Only	36	150,000
Frame, Gussets, Crossmembers, Cab/Hood Structure, and Cab/Hood Corrosion Frame rails, gussets, and crossmembers. Structural components of the cab and hood. Cab and hood perforation caused by corrosion from within. This warranty does not apply to corrosion caused by damage to a cab panel or to finish paint.	36	Unlimited
Other Coverage		
PACCAR Batteries	12	Unlimited
Gaskets and Wheel Seals	12	50,000
Cab and Hood Paint	12	100,000
Frame Paint – Black only	12	100,000
Frame Paint – All colors other than black	6	50,000
Frame Paint – Logger mixer, Dump, Refuse, Oil Field & Construction applications	3	25,000
Severe Service Vehicle – All Kenworth installed components except as excluded herein. Severe Service vehicles are those operated 10% or more on class C or D roads.	12	50,000

Chassis Number(s) (17-digit VIN)

Customer Initials_____

PACCAR Engine Warranty Process

The best truck on the road is powered with the best engine and we're proud to stand behind this unmatched combination. The combination of the Peterbilt truck and the PACCAR Engine positions you to maximize your sales, parts, and service margin opportunities. Now, the warranty process has become easier.

The overall Medium Duty Truck Warranty has NOT changed.

The Warranty for the PACCAR Engines will be:
PX-6 2 years with unlimited miles
PX-8 2 years - 250,000 miles

Warranty work can only be completed by a PACCAR dealership or by a Cummins distributor. Competitive dealers cannot perform warranty work on the PACCAR engine.

Warranty claims are to be directly submitted to Cummins through Rapidserve; Cummins will reimburse PACCAR Parts and PACCAR Parts will credit your dealership. This is identical to the ISX Parts warranty flow that exists today, and it takes the Cummins distributor out of the warranty process.

The new warranty process achieves:

- Streamlined warranty submittal
- Expedited claims processing
- Proprietary warranty service and
- Improved warranty reimbursement

Equipment
Powered by:
INPAVE
TECHNOLOGY

SP Series Spray Injection Pothole Patchers

Specification Sheet

The Bergkamp SP Series Spray Injection Pothole Patchers provide a simple, quick pothole repair using the less invasive spray injection patching process that is designed to blow out and repair potholes in minutes—returning vehicles to the area sooner and minimizing traffic flow disturbances.

The SP Series is engineered with *InPave*® Technology, a Bergkamp-exclusive telematics system that automatically generates reliable performance information for each crew, patcher and all patching materials. By capturing data from normal functions, *InPave* Technology allows you to evaluate your process, and enables your agency to make strategic changes to increase patching quality and reduce costs. The *InPave* Technology features an in-cab, 7" color touch screen with a GPS function that can export the mapping data to a Shape File for seamless blending into your GIS System. All other data can be exported as well, in various formats for reporting and management analysis. When you integrate *InPave* Technology with the SP Series Spray Injection Pothole Patchers, you get ***Smart Patching***™!

SP5 and SP8 truck-mounted spray injection patchers can be custom-mounted on a conventional or cab-over chassis for utilization of existing fleet vehicles. Truck-mounted units feature a front-mounted boom, providing a working radius of up to 13 feet in front of the truck for crew safety, and can be operated from the cab or manually from the ground.

Kubota diesel engine drives the blower and hydraulic pump. The auger motors and emulsion pump are hydraulically driven.

An industry-exclusive dual chamber (60/40) aggregate hopper allows the distribution of two different gradations of aggregate for more efficient repair of deeper potholes and to better match the characteristics of the existing asphalt pavement. Each chamber of the hopper is equipped with a separate auger (with protective cover for the entire length) to control the flow of aggregate into the forced-air delivery system. Each auger is hydraulically-driven with variable speed and directional controls located on the operator panel inside the cab. The SP5 has a 5.0 cu yd (3.8 cu m) aggregates hopper. The SP8 has a 7.5 cu yd (5.7 cu m) aggregates hopper.

The aggregate delivery hose features a large 3-in diameter ID, abrasion-resistant material, with antistatic layers and steel wire reinforcement. The flexible aggregate hose attaches to the boom aggregate pipe and is equipped with an anti-wear chamber. The aggregate flows directly through the nozzle assembly, where it is coated with heated asphalt emulsion before entering the repair area.

Bergkamp Inc. 3040 Emulsion Drive, Salina, KS 67401-8966 USA
Phone: (785) 825-1375 • Fax: (785) 825-4269 • government-sales@bergkampinc.com • www.bergkampinc.com

BERGKAMP
PAVEMENT PRESERVATION SOLUTIONS

PATCHING MADE *Safer & Easier*

ASPHALT EMULSION TANK:

The SP5 has a 265 gal (1,003 L) asphalt emulsion tank. The SP8 has a 370 gal (1,400 L) asphalt emulsion tank. Emulsion tanks are insulated and use a Riello burner to heat and maintain the emulsion at the recommended temperature. The Riello burner is an electrically-controlled diesel-fired system, with the temperature controlled by a thermostat. During normal operations, the electrical power is provided by the battery inside the engine compartment that is connected to a power inverter. The inverter converts the 12-volt battery power into 120-volt power to control the heating system. The heat can also be maintained during storage at night utilizing an extension cord to provide electrical power. The burner and the diesel engine both receive fuel from the fuel tank located on board the patcher. The unit includes an emulsion level indicator; diesel-fuel emulsion heater with electronic thermostat; easy-to-clean strainer; hydraulically driven emulsion pump, emulsion recirculation for faster heating and a water jacket to allow auxiliary engine antifreeze to flow around the pump during cold weather operations.

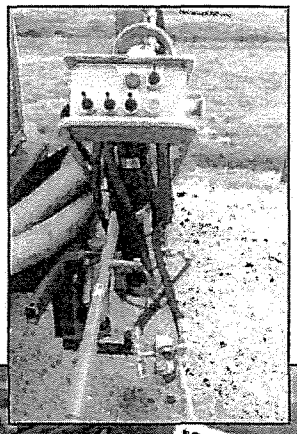

FRONT MOUNTED WORKING BOOM:

Joystick-control units provide full operator control from the truck cab, or with a remote-control system from the ground. Manual-control units offer full operator control from the ground in front of the truck. Both configurations have a working boom radius of 13 feet (3.96 m). The second section of the boom rotates a full 270 degrees at the pivot to allow for precise control of the placement of the nozzle assembly over the work area

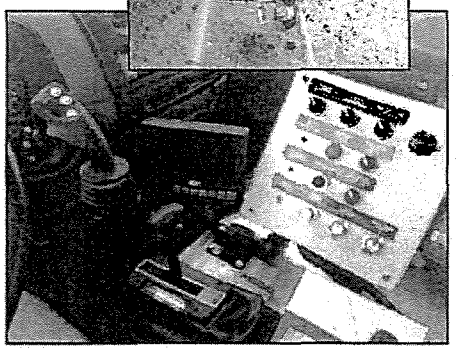

INJECTION NOZZLE:

Three injectors in the nozzle guarantee homogenous asphalt emulsion and aggregate coverage for high-quality, durable pothole repairs. Nozzle flexibility provides precise control while drying, cleaning and filling potholes.

HYDRAULIC SYSTEM:

The hydraulic pump is mounted directly to the auxiliary engine. The hydraulic reservoir and oil cooler with fan are contained within the auxiliary engine compartment. The proportional valves used to control the hydraulically-driven components are mounted underneath the engine compartment with easy access for adjustments and maintenance. The hydraulic tank is equipped with a level indicator and temperature gauge.

OPTIONAL EQUIPMENT:

- **LED lights**
- **Upgraded Arrow Boards**
- **Traffic Cone Holders**
- **Shovel and Asphalt Lute Holder**

SPT trailer-mounted spray injection patchers feature a rear-mounted working boom, controlled manually from the ground. The SPT is designed to control all repair functions from one control panel. Mounted on a single-axle trailer, the SPT may be towed by a fleet vehicle, with the dump body serving as the aggregate hopper.

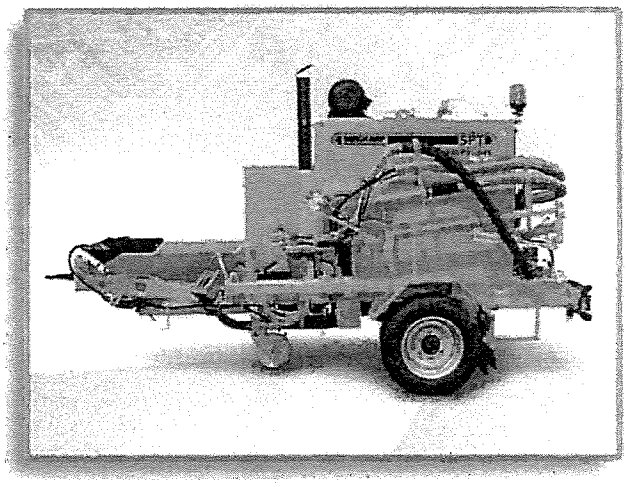

Two-cylinder Hatz diesel engine powers the blower, hydraulic pumps and aggregate feeding auger.

1,300 lb (600 kg) capacity container captures aggregate load from the hauling truck.

Heated, 260 gal (984 L) asphalt emulsion tank temperature is maintained by adjustable burner. Hydraulically driven emulsion pump. Emulsion recirculation for faster heating.

Enables the operator to complete multiple repairs in a 14.8 ft (4.5 m) radius

SP SERIES SPRAY INJECTION POTHOLE PATCHERS

INTERNATIONAL TRUCK

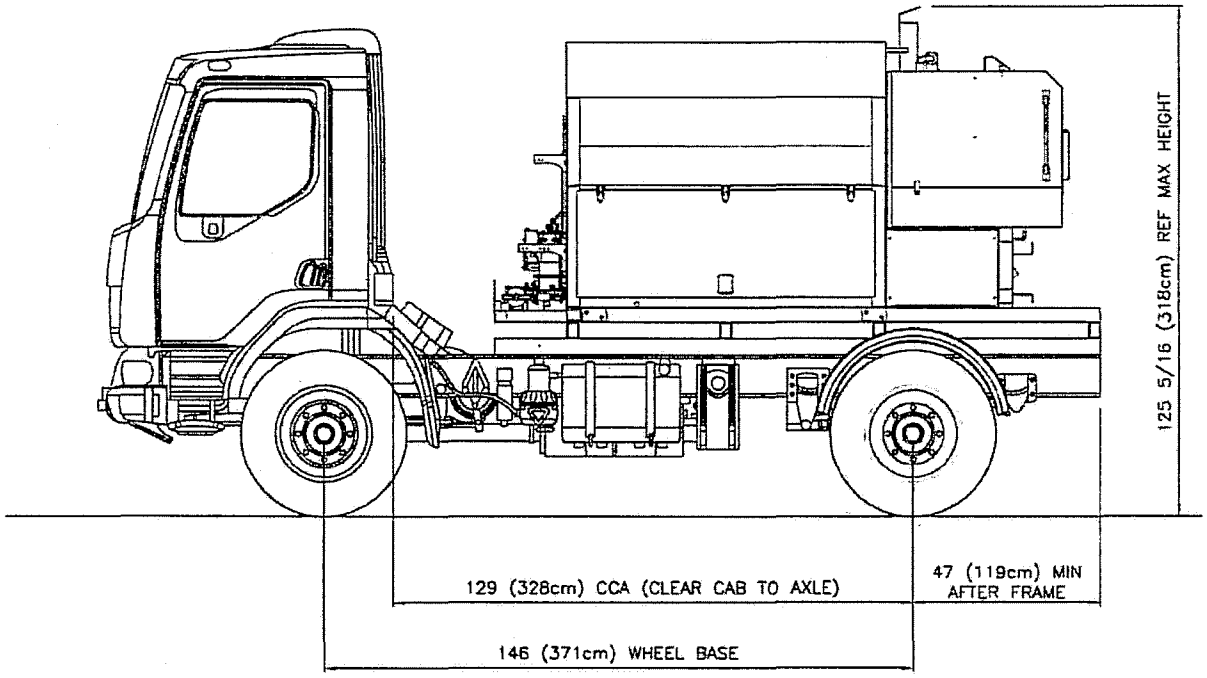

The SP5 truck chassis must have a minimum GVWR of 33,000 lb (14,968 kg), with a minimum front axle capacity 12,000 lb (5,443 kg), minimum rear axle capacity 21,000 lb (9,525 kg) and air brakes. The SP8 truck chassis must be tandam axle and have a minimum GVWR of 48,000 lb (2,177 kg). The preferred air tank location is behind the drive axle, under the frame and perpendicular to the frame. Horizontal exhaust components are preferred. Chassis to be equipped with 22.5 in (57.2 cm) wheels with 11R22.5 tires. Tail light wiring to include combination stop/tail/turn wiring harness. The end user is responsible for loading the SP unit within the truck manufacturer's axle rating and within the appropriate federal, state and local laws.

	Aggregate*	Asphalt Emulsion	Water Tank System (optional)
	5.0 cu yd (3.8 cu m)	265 gal (1,003 L)	530 gal (2006 L)
	7.5 cu yd (5.7 cu m)	370 gal(1,400 L)	560 gal (2120 L)
	1,300 lb (600 kg)	260 gal (1,000 L)	—

*Struck capacity

	Length	Width	Height	Empty Weight**
	189.75 in (4,820 mm)	95.0 in (2,400 mm)	82.0 in (2,083 mm)	4,850 lbs (2,200 kg)
	205.75 in (5,226 mm)	95.0 in (2,400 mm)	82.0 in (2,083 mm)	5,732 lbs (2,600 kg)
	185.0 in (4,700 mm)	99.0 in (2,500 mm)	95.0 in (2,400 mm)	7,606 lb (3,450 kg)

**SP5 and SP8 empty weight, not including chassis. SPT operating weight.

Bergkamp Inc.
3040 Emulsion Drive
Salina, KS 67401-8966 USA
Phone: (785) 825-1375 • Fax: (785) 825-4269
government-sales@bergkampinc.com • www.bergkampinc.com

© Bergkamp Inc. Products and specifications subject to change without notice.
Some equipment shown with optional features and accessories.

BERGKAMP

PAVEMENT PRESERVATION SOLUTIONS

LIMITED WARRANTY

BERGKAMP INCORPORATED WARRANTS PRODUCTS OF ITS MANUFACTURE AGAINST DEFECTS IN WORKMANSHIP AND MATERIAL FOR A PERIOD OF TWELVE (12) MONTHS FROM DATE OF ACCEPANCE OF THE UNIT BY THE CUSTOMER. MANUFACTURER WILL FURNISH TO THE CUSTOMER WITHOUT CHARGE, F.O.B. SALINA, KANSAS, REPLACEMENTS FOR SUCH PARTS AS THE MANUFACTURER FINDS TO HAVE BEEN DEFECTIVE, OR AT THE MANUFACTURER'S OPTION, WILL MAKE OR AUTHORIZE REPAIRS TO SUCH PARTS, PROVIDED THAT, UPON REQUEST, SUCH PARTS ARE RETURNED, TRANSPORTATION PREPAID, TO THE FACTORY AT SALINA, KANSAS, AND LABOR CHARGES TO INSTALL SUCH PARTS, SUBJECT TO THE PRIOR APPROVAL OF BERGKAMP INCORPORATED THIS WARRANTY SHALL NOT APPLY TO ANY PRODUCT WHICH HAS BEEN SUBJECT TO MISUSE, MISAPPLICATION, NEGLECT, ACCIDENT, IMPROPER INSTALLATION, MODIFICATION ADJUSTMENT, OR REPAIR.

BERGKAMP INCORPORATED ASSUMES NO RESPONSIBILITY FOR ENGINES, PUMPS, MOTORS, ELECTRICAL EQUIPMENT OR ANY OTHER EQUIPMENT AND ACCESSORIES NOT MANUFACTURED BY BERGKAMP INCORPORATED BEYOND THE WARRANTY OF THE MANUFACTURER OF SUCH EQUIPMENT OR ACCESSORIES.

THE FOREGOING IS IN LIEU OF ALL OTHER WARRANTIES, WHETHER EXPRESS OR IMPLIED (INCLUDING THOSE OF MERCHANTABILITY AND FITNESS OF ANY PRODUCT FOR A PARTICULAR PURPOSE), AND OF ANY OTHER OBLIGATION OR LIABILITY ON THE PART OF THE MANUFACTURER.

IT IS EXPRESSLY UNDERSTOOD THAT THE MANUFACTURER'S LIABILITY FOR ITS PRODUCTS, WHETHER DUE TO BREACH OF WARRANTY, NEGLIGENCE, STRICT LIABILITY, OR OTHERWISE, IS LIMITED TO THE FURNISHING OF SUCH REPLACEMENT PARTS, AND THE MANUFACTURER WILL NOT BE LIABLE FOR ANY OTHER INJURY, LOSS, DAMAGE, OR EXPENSE, WHETHER DIRECT OR CONSEQUENTIAL, INCLUDING BUT NOT LIMITED TO LOSS OF USE, INCOME, PROFIT, OR PRODUCTION, OR INCREASED COST OF OPERATION, OR SPOILAGE OF OR DAMAGE TO MATERIAL, ARISING IN CONNECTION WITH THE SALE, INSTALLATION, USE OF, INABILITY TO USE, OR THE REPAIR OR REPLACEMENT OF THE MANUFACTURER'S PRODUCTS.

BERGKAMP INCORPORATED RESERVES THE RIGHT TO MAKE CHANGES IN DESIGN FROM TIME TO TIME AS ARE DEEMED DESIRABLE WITHOUT INCURRING THE OBLIGATION TO FURNISH THEM FOR MACHINES PREVIOUSLY SOLD OR SHIPPED.

NO MODIFICATION TO THIS LIMITED WARRANTY SHALL BE VALID UNLESS SUCH MODIFICATION IS REDUECED TO WRITING AND SIGNED ON BEHALF OF BERGKAMP INCORPORATED BY ITS PRESIDENT.

IF LABOR IS PROVIDED BY A THIRD PARTY, WARRANTY WILL BE ADMINISTERED AS DESCRIBED IN THE SERVICE AGREEMENT BETWEEN BERGKAMP INCORPORATED AND THE THIRD PARTY PROVIDER.

BERGKAMP INCORPORATED
30400 EMULSION DR
SALINA KS 67401

HGACBuy	CONTRACT PRICING WORKSHEET For MOTOR VEHICLES Only	Contract No.:	HT06-14	Date Prepared:	22-Dec

This Worksheet is prepared by Contractor and given to End User. If a PO is issued, both documents MUST be faxed to H-GAC @ 713-993-4548. Therefore please type or print legibly.

Buying Agency:	CITY OF SAN ANTONIO	Contractor:	French Ellison Truck Center
Contact Person:	IAM MONTEMAYOR	Prepared By:	Jason W. Mims
Phone:	210-207-3900	Phone:	210-662-9333
Fax:		Fax:	210-662-5999
Email:	Ian.Montemayor@sanantonio.gov	Email:	jason.mims@frenchellison.com

Product Code:	I3	Description:	T300-370, Conv. Cab, SBFA, SRA

A. Product Item Base Unit Price Per Contractor's H-GAC Contract: 59257

B. Published Options - Itemize below - Attach additional sheet(s) if necessary - Include Option Code in description if applicable.
(Note: Published Options are options which were submitted and priced in Contractor's bid.)

Description	Cost	Description	Cost
0120220 - PX-7 220hp	418		
2010860 - IPO 2010859 - Allison 2500RDS	3101		
		Subtotal From Additional Sheet(s):	0
		Subtotal B:	3519

C. Unpublished Options - Itemize below / attach additional sheet(s) if necessary.
(Note: Unpublished options are items which were not submitted and priced in Contractor's bid.)

Description	Cost	Description	Cost
3836310 - Shock Absorbers	202	K370 - K370 COE Conversion	6902
9140290 - Air Tanks Mounted in Frame Flanges	248	Subtotal From Additional Sheet(s):	
KWSW - Kenworth Software - Davie Tool	4500	Subtotal C:	11852

Check: Total cost of Unpublished Options (C) cannot exceed 25% of the total of the Base Unit Price plus Published Options (A+B). **For this transaction the percentage is:** 19%

D. Total Cost Before Any Applicable Trade-In / Other Allowances / Discounts (A+B+C)

Quantity Ordered:	4	X Subtotal of A + B + C:	74628	=	Subtotal D:	298512

E. H-GAC Order Processing Charge (Amount Per Current Policy) Subtotal E: 1500

F. Trade-Ins / Special Discounts / Other Allowances / Freight / Installation / Miscellaneous Charges

Description	Cost	Description	Cost
BERGKAMP SPS SPRAY INJECTION PATCHER	283750		
($141,875.00 EACH)			
(HGAC CONTRACT #: SM10-14)		Subtotal F:	283750

Delivery Date:	TBD	G. Total Purchase Price (D+E+F):	583762

HGACBuy	CONTRACT PRICING WORKSHEET For Standard Equipment Purchases	Contract No.:	SM10-14	Date Prepared:	7/16/2015

This Worksheet is prepared by Contractor and given to End User. If a PO is issued, both documents MUST be faxed to H-GAC @ 713-993-4548. Therefore please type or print legibly.

Buying Agency:	City of San Antonio	Contractor:	Bergkamp Inc.
Contact Person:	Rolando Mata	Prepared By:	Jennifer Straus
Phone:		Phone:	254-717-3664
Fax:		Fax:	
Email:	rolando.mata@sanantonio.gov	Email:	jennifes@bergkampinc.com

Product Code:	04BD1	Description:	Bergkamp SP5 Spray Patcher

A. Product Item Base Unit Price Per Contractor's H-GAC Contract:

B. Published Options - Itemize below - Attach additional sheet if necessary - Include Option Code in description if applicable
(Note: Published Options are options which were submitted and priced in Contractor's bid.)

Description	Cost	Description	Cost
SP5 Spray Injection Patcher	$89,370		
Boom Configuration	$27,900.00		
Double hoppers	$7,000.00		
Mounting	$2,775.00		
Delivery and Training	$2,750.00		
		Subtotal From Additional Sheet(s):	
		Subtotal B:	129795

C. Unpublished Options - Itemize below - Attach additional sheet if necessary
(Note: Unpublished options are items which were not submitted and priced in Contractor's bid.)

Description	Cost	Description	Cost
Back up camera	$1,800.00	double strobes for arrowboard	$243.00
Double sided arrowboard	$2,010.00	Single LED strobe	$510.00
Work lights	$1,028.00	LED lights on machine	$1,250.00
tarp	$2,860.00		
Legs	$2,150.00	**State of KS sales tax on mounting only**	$229.00
		Subtotal C:	12080

Check: Total cost of Unpublished Options (C) cannot exceed 25% of the total of the Base Unit Price plus Published Options (A+B).	**For this transaction the percentage is:**	9%

D. Total Cost before any other applicable Charges, Trade-Ins, Allowances, Discounts, Etc. (A+B+C)

Quantity Ordered:	4	X Subtotal of A + B + C:	141875	=	Subtotal D:	567500

E. Other Charges, Trade-Ins, Allowances, Discounts, Etc.

Description	Cost	Description	Cost
		Subtotal E:	0

Delivery Date:	F. Total Purchase Price (D+E):	567500