SG/cla
06/18/2015
Z-5

CASE NO. Z2015064

AN ORDINANCE 2015-06-18-0608

AMENDING THE OFFICIAL ZONING MAP OF THE CITY OF SAN ANTONIO BY AMENDING CHAPTER 35, UNIFIED DEVELOPMENT CODE, SECTION 35-304, OF THE CITY CODE OF SAN ANTONIO, TEXAS BY CHANGING THE ZONING DISTRICT BOUNDARY OF CERTAIN PROPERTY.

* * * * *

WHEREAS, on October 2, 2014 the San Antonio City Council adopted four (4) Mission Protection Overlay zoning districts to enhance the historic preservation program for Mission Concepcion located at 807 Mission Road, Mission San Jose located at 6701 San Jose Drive, Mission San Juan located at 9101 Graf Road and Mission Espada located at 10040 Espada Road; and

WHEREAS, the historic viewsheds will protect views of significant historic sites and regulate development adjacent to the historic San Antonio Missions; and

WHEREAS, the proposed districts are in keeping with the Strategic Historic Preservation Plan that was adopted in 2009 and the San Antonio Master Plan Policies adopted May 29, 1997; and

WHEREAS, the Mission Protection Overlay District 1 "MPOD-1" was created for the area surrounding Mission Concepcion generally bound on the north by IH-10 E Access Road, on the east by Roosevelt Avenue, on the south by East Southcross Boulevard, and on the west by Probandt Street as depicted in **Attachment "A"** attached hereto and incorporated herein for all purposes; and

WHEREAS, the Mission Protection Overlay District 2 "MPOD-2" was created for the area surrounding Mission San Jose generally bound by on the north by East Southcross Boulevard, on the east by Padre Drive and Mission Parkway, on the south by SE Military Drive, and on the west by Quintard Street as depicted in **Attachment "B"** attached hereto and incorporated herein for all purposes; and

WHEREAS, the Mission Protection Overlay District 3 "MPOD-3" was created for the area surrounding Mission San Juan de Capistrano generally bound on the north by SE Military Drive, on the east by Old Corpus Christi Road, on the south by SE Loop 410/U.S. Highway 281, and on the west by Roosevelt Avenue as depicted in **Attachment "C"** attached hereto and incorporated herein for all purposes; and

WHEREAS, the Mission Protection Overlay District 4 "MPOD-4" was created for the area surrounding Mission Espada, generally bound on the north by the west-bound SE Loop 410 Access Road, on the east by Villamain, on the south by Espada Road, and on the west by Roosevelt Avenue as depicted in **Attachment "D"** attached hereto and incorporated herein for

all purposes; and

WHEREAS, a public hearing was held regarding this amendment to the Official Zoning Map at which time parties in interest and citizens were given an opportunity to be heard; and

WHEREAS, the Zoning Commission has submitted a final report to the City Council regarding this amendment to the Official Zoning Map of the City of San Antonio; **NOW THEREFORE**,

BE IT ORDAINED BY THE CITY COUNCIL OF THE CITY OF SAN ANTONIO:

SECTION 1. Chapter 35, Unified Development Code, Section 35-304, Official Zoning Map, of the City Code of San Antonio, Texas is amended by adding the zoning districts for the Mission Protection Overlay districts, MPOD-1, MPOD-2, MPOD-3, and MPOD-4 to properties more specifically described as follows:

The following properties are amended by adding the Mission Protection Overlay District 1, "MPOD-1":

Property ID	Legal Description
378529	NCB 6517 BLK 6 LOT 39
378530	NCB 6517 BLK 6 LOT 40
378508	NCB 6517 BLK 6 LOT 6, 7 & 8
378527	NCB 6517 BLK 6 LOT 37
378528	NCB 6517 BLK 6 LOT 38 (ORTA SUBD)
378506	NCB 6517 BLK 6 LOTS 4 & 33
378507	NCB 6517 BLK 6 LOT 5 & 32
378525	NCB 6517 BLK 6 LOT 31
378524	NCB 6517 BLK 6 LOT 30
378523	NCB 6517 BLK 6 LOT 29
378522	NCB 6517 BLK 6 LOT 27, AND 28
378521	NCB 6517 BLK 6 LOT 26
378511	NCB 6517 BLK 6 LOT 12, AND 25
378520	NCB 6517 BLK 6 LOT 24
378519	NCB 6517 BLK 6 LOT 23
378518	NCB 6517 BLK 6 LOT 21, AND 22
378504	NCB 6516 BLK 5 LOT 35, AND 36
378503	NCB 6516 BLK 5 LOT 33 & 34
378502	NCB 6516 BLK 5 LOT 32
378501	NCB 6516 BLK 5 LOT 31
378500	NCB 6516 BLK 5 LOT 29, AND 30
378499	NCB 6516 BLK 5 LOT 28
378498	NCB 6516 BLK 5 LOT 27
378497	NCB 6516 BLK 5 LOT 25 & 26
378480	NCB 6516 BLK 5 LOT 1&2 EXC NE IRR 3.64 FT OF 1 & 2
378496	NCB 6516 BLK 5 LOT 24
378481	NCB 6516 BLK 5 LOT 3, & W 20 FT OF 4

378495 NCB 6516 BLK 5 LOT 22, AND 23
378494 NCB 6516 BLK 5 LOT 21
378482 NCB 6516 BLK 5 LOT 5, & E 20 FT OF 4
378493 NCB 6516 BLK 5 LOT 20
378492 NCB 6516 BLK 5 LOT 19
378483 NCB 6516 BLK 5 LOT 6&7
378466 NCB 6515 BLK 4 LOT S 14.49 FT OF 4
378484 NCB 6516 BLK 5 LOT 8, & W 20 FT OF 9
378448 NCB 6513 BLK 2 LOT 28
378447 NCB 6513 BLK 2 LOT 27
378485 NCB 6516 BLK 5 LOT 10, & E 20 FT OF 9
378486 NCB 6516 BLK 5 LOT 11, & W 20 FT OF 12 AT 234 PALO BLANCO
378487 NCB 6516 BLK 5 LOT 13, & E 20 FT OF 12
378488 NCB 6516 BLK 5 LOT 14
378489 NCB 6516 BLK 5 LOT 15
378465 NCB 6515 BLK 4 LOT 3 & N 32.51 FT OF 4
378490 NCB 6516 BLK 5 LOT 16 & W 20 FT OF 17
378491 NCB 6516 BLK 5 LOT 18, AND E 20 FT OF 17
378421 NCB 6513 BLK 2 LOT W, 42 FT OF 1
378422 NCB 6513 BLK 2 LOT 2, AND E 8 FT OF 1
378423 NCB 6513 BLK 2 LOT 3
378425 NCB 6513 BLK 2 LOT 4 & 5
378463 NCB 6515 BLK 4 LOT 1&2
378427 NCB 6513 BLK 2 LOT 6 & W 30 FT OF 7
378467 NCB 6515 BLK 4 LOT W 50 FT OF 5 & 7
378468 NCB 6515 BLK 4 LOT E 50 FT OF 5 & E 50 FT OF W 100 FT OF 7
378469 NCB 6515 BLK 4 LOT W 50 FT OF 6 & W 50 FT OF E 100 FT OF 7
378470 NCB 6515 BLK 4 LOT E 50 FT OF 6 & 7
378471 NCB 6515 BLK 4 LOT 8
378472 NCB 6515 BLK 4 LOT 9
378473 NCB 6515 BLK 4 LOT 10
378474 NCB 6515 BLK 4 LOT 11
155372 NCB 3982 BLK 8 LOT S IRRG 90 FT OF 27, 28 & 29
378475 NCB 6515 BLK 4 LOT 12 & W 10 FT OF 13
378476 NCB 6515 BLK 4 LOT 14, E 30 FT OF 13 & W 10 FT OF 15
378477 NCB 6515 BLK 4 LOT E 30 FT OF 15 & W 20 FT OF 16
378478 NCB 6515 BLK 4 LOT 17, & E 20 FT OF 16
155371 NCB 3982 BLK 8 LOT N IRR 45 FT OF 27,28,29 & W IRR 160.6 FT OF 16 FT FORMER ALLEY
378450 NCB 6514 BLK 3 LOT 1
378454 NCB 6514 BLK 3 LOT 6, 7 AND 8
378455 NCB 6514 BLK 3 LOT 9
378456 NCB 6514 BLK 3 LOT 10
155370 NCB 3982 BLK 8 LOT 24 & W 50 FT OF E 450 FT OF 16 FT FORMERLY ALLEY
378479 NCB 6515 BLK 4 LOT 18
378453 NCB 6514 BLK 3 LOT 5, & E 20 FT OF 4

155369 NCB 3982 BLK 8 LOT 20 & W 50 FT OF E 250 FT OF FORMER ALLEY
155368 NCB 3982 BLK 8 LOT 19 & W 50 FT OF E 200 FT OF S 8 FT FORMER ALLEY
378451 NCB 6514 BLK 3 LOT 2, & E 40 FT OF W 90 FT OF 15
155367 NCB 3982 BLK 8 LOT 18 & W 50 FT OF E 150 FT OF S 8 FT FORMER ALLEY
378452 NCB 6514 BLK 3 LOT 3, W 20 FT OF 4 & W 60 FT OF E 145 FT OF 15
378462 NCB 6514 BLK 3 LOT E IRR 85 FT OF 15
155350 NCB 3981 BLK 7 LOT 17 & NCB 6514 BLK 3 W 50 FT OF LOT 15
155352 NCB 3982 BLK 8 LOT W 12.16 FT OF 1
155353 NCB 3982 BLK 8 LOT 2 & E 22.24 FT OF 1
155354 NCB 3982 BLK 8 LOT 3
155347 NCB 3981 BLK 7 LOT 13 & E 33 FT OF 14 (NON ADJACENT PROPERTY)
138916 NCB 3000 BLK 4 LOT W TRI 15 FT OF 50, 51 & 52
155355 NCB 3982 BLK 8 LOT 4
155356 NCB 3982 BLK 8 LOT 5, 26 & W 50 FT OF E 550 FT OF 16 FT FORMER ALLEY
155357 NCB 3982 BLK 8 LOT 6, 25 & W 50 FT OF E 500 FT OF 16 FT FORMER ALLEY
155358 NCB 3982 BLK 8 LOT 7
155359 NCB 3982 BLK 8 LOT 8, 23 & W 50 FT OF E 400 FT OF 16 FT FORMER ALLEY
155360 NCB 3982 BLK 8 LOT 9, 22 & W 50 FT OF E 350 FT OF 16 FT FORMER ALLEY
155361 NCB 3982 BLK 8 LOT 10, 21 & W 50 FT OF E 300 FT OF 16 FT FORMER ALLEY
155362 NCB 3982 BLK 8 LOT 11
155363 NCB 3982 BLK 8 LOT 12 & W 50 FT OF E 200 FT OF N 8 FT FORMER ALLEY
155364 NCB 3982 BLK 8 LOT 13 & W 50 FT OF E 150 FT OF N 8 FT FORMER ALLEY
155365 NCB 3982 BLK 8 LOT 14 & 17 & W 50 FT OF E 100 FT OF 16 FT (FORMER ALLEY)
155366 NCB 3982 BLK 8 LOT 15, N IRR 40 FT OF 16 & E 50 FT OF FORMER ALLEY
138915 NCB 3000 BLK 4 LOT 50, 51 & 52, EXC W TRI 15 FT
155333 NCB 3981 BLK 7 LOT 1
155335 NCB 3981 BLK 7 LOT W 33 FT OF 2, 16, & P-100 (PT OF 16 FT ESMT)
155334 NCB 3981 BLK 7 LOT E 17 FT OF 2
155337 NCB 3981 BLK 7 LOT 3,15 & W 17 FT OF 4,& W 17 FT OF 14 & P-101
(PT OF 16 FT ALLEY)
155339 NCB 3981 BLK 7 LOT 5, & E 33 FT OF 4 (NON ADJACENT PROPERTY)
155340 NCB 3981 BLK 7 LOT 6 & W 25 FT OF 7
155341 NCB 3981 BLK 7 LOT 8 & E 25 FT OF 7
155342 NCB 3981 BLK 7 LOT 9
155343 NCB 3981 BLK 7 LOT 10
155344 NCB 3981 BLK 7 LOT W IRR 42.55 OF 11 & 12
155306 NCB 3979 BLK 5 LOT 31
155345 NCB 3981 BLK 7 LOT W IRR 50 FT OF E IRR 100 FT OF 11 & 12
155305 NCB 3979 BLK 5 LOT 30 & W 25` OF 29
155304 NCB 3979 BLK 5 LOT 28 & E 25 FT OF 29
155303 NCB 3979 BLK 5 LOT 27
155302 NCB 3979 BLK 5 LOT 26
155301 NCB 3979 BLK 5 LOT 25
155300 NCB 3979 BLK 5 LOT 24
155299 NCB 3979 BLK 5 LOT 23
155298 NCB 3979 BLK 5 LOT 22

155297 NCB 3979 BLK 5 LOT 21
155296 NCB 3979 BLK 5 LOT 20
155295 NCB 3979 BLK 5 LOT 19
155294 NCB 3979 BLK 5 LOT 17 AND 18
155332 NCB 3980 BLK 6 LOT 26
155331 NCB 3980 BLK 6 LOT 25
155330 NCB 3980 BLK 6 LOT 24
155329 NCB 3980 BLK 6 LOT 23 EXCEPT E IRR 2.09 FT
155328 NCB 3980 BLK 6 LOT 22 & E IRR 2.09 FT OF 23
155327 NCB 3980 BLK 6 LOT 21
155326 NCB 3980 BLK 6 LOT 20
155279 NCB 3979 BLK 5 LOT 1&2
155325 NCB 3980 BLK 6 LOT 19
155280 NCB 3979 BLK 5 LOT 3
155324 NCB 3980 BLK 6 LOT 18
155281 NCB 3979 BLK 5 LOT 4
155323 NCB 3980 BLK 6 LOT 17
155282 NCB 3979 BLK 5 LOT 5
155283 NCB 3979 BLK 5 LOT 6
155284 NCB 3979 BLK 5 LOT 7 AT 238 ISABEL
155285 NCB 3979 BLK 5 LOT 8
155286 NCB 3979 BLK 5 LOT 9
155322 NCB 3980 BLK 6 LOT 14 15 & 16
155287 NCB 3979 BLK 5 LOT 10
155288 NCB 3979 BLK 5 LOT 11
155289 NCB 3979 BLK 5 LOT 12
155290 NCB 3979 BLK 5 LOT 13
155291 NCB 3979 BLK 5 LOT 14
155292 NCB 3979 BLK 5 LOT 15
155293 NCB 3979 BLK 5 LOT 16
155321 NCB 3980 BLK 6 LOT 13
155307 NCB 3980 BLK 6 LOT 1
155308 NCB 3980 BLK 6 LOT 2
155309 NCB 3980 BLK 6 LOT 3
155310 NCB 3980 BLK 6 LOT 4
155311 NCB 3980 BLK 6 LOT 5
155312 NCB 3980 BLK 6 LOT 6
155313 NCB 3980 BLK 6 LOT 7
155314 NCB 3980 BLK 6 LOT 8
155315 NCB 3980 BLK 6 LOT 9
155316 NCB 3980 BLK 6 LOT 10
155278 NCB 3978 BLK 4 LOT 33 AND 34
155277 NCB 3978 BLK 4 LOT 32
155276 NCB 3978 BLK 4 LOT 31
155275 NCB 3978 BLK 4 LOT 30
155274 NCB 3978 BLK 4 LOT 29

155273	NCB	3978	BLK	4	LOT 28
155272	NCB	3978	BLK	4	LOT 27
155271	NCB	3978	BLK	4	LOT 26
155270	NCB	3978	BLK	4	LOT 25
155269	NCB	3978	BLK	4	LOT 24
138271	NCB	2961	BLK	2	LOT 47
155268	NCB	3978	BLK	4	LOT 23
155267	NCB	3978	BLK	4	LOT 22
155266	NCB	3978	BLK	4	LOT 21
155265	NCB	3978	BLK	4	LOT 20
155246	NCB	3978	BLK	4	LOT 1
155264	NCB	3978	BLK	4	LOT 19
155263	NCB	3978	BLK	4	LOT 18
155245	NCB	3977	BLK	3	LOT 26
155247	NCB	3978	BLK	4	LOT 2
155244	NCB	3977	BLK	3	LOT 25
155243	NCB	3977	BLK	3	LOT 24
155242	NCB	3977	BLK	3	LOT 23
138257	NCB	2961	BLK	2	LOT 12 N 1/2 OF 13
155241	NCB	3977	BLK	3	LOT 22
155248	NCB	3978	BLK	4	LOT 3
155235	NCB	3977	BLK	3	LOT W 70 FT OF 15 & 16
155240	NCB	3977	BLK	3	LOT 21
155239	NCB	3977	BLK	3	LOT 20
155236	NCB	3977	BLK	3	LOT E 70 FT OF 15 & 16
155238	NCB	3977	BLK	3	LOT 19 & W 25 FT OF 18
155249	NCB	3978	BLK	4	LOT 4
385455	NCB	6919	BLK	0	LOT 36 AND 37
155221	NCB	3977	BLK	3	LOT S 45 FT OF 1
155237	NCB	3977	BLK	3	LOT 17 & E 25 FT OF 18
155250	NCB	3978	BLK	4	LOT 5
155251	NCB	3978	BLK	4	LOT 6
138256	NCB	2961	BLK	2	LOT 11
155252	NCB	3978	BLK	4	LOT 7 HS
155253	NCB	3978	BLK	4	LOT 8
155254	NCB	3978	BLK	4	LOT 9
155234	NCB	3977	BLK	3	LOT 14
155255	NCB	3978	BLK	4	LOT 10 HS
385456	NCB	6919	BLK	0	LOT 38 39 AND 40
155256	NCB	3978	BLK	4	LOT 11
155257	NCB	3978	BLK	4	LOT 12
155258	NCB	3978	BLK	4	LOT 13
155259	NCB	3978	BLK	4	LOT 14
155260	NCB	3978	BLK	4	LOT 15
385432	NCB	6919	BLK	0	LOT 1&2
385457	NCB	6919	BLK	0	LOT 41 AND 42

155261	NCB	3978	BLK	4	LOT 16
155262	NCB	3978	BLK	4	LOT 17
155220	NCB	3977	BLK	3	LOT N 97 FT OF 1
385433	NCB	6919	BLK		LOT 3 & 4
385458	NCB	6919	BLK	0	LOT 43 AND 44
155223	NCB	3977	BLK	3	LOT 3
155224	NCB	3977	BLK	3	LOT 4
155225	NCB	3977	BLK	3	LOT 5
385434	NCB	6919	BLK		LOT 5 & 6
385459	NCB	6919	BLK		LOT 45 & 46
155226	NCB	3977	BLK	3	LOT 6
155227	NCB	3977	BLK	3	LOT 7
155228	NCB	3977	BLK	3	LOT 8
155229	NCB	3977	BLK	3	LOT 9
385436	NCB	6919	BLK		LOT 7 & 8
155230	NCB	3977	BLK	3	LOT 10
137635	NCB	2929	BLK	1	LOT 5&6
385460	NCB	6919	BLK	0	LOT 47 AND 48
155231	NCB	3977	BLK	3	LOT W 40 FT OF 11, 12, 13 & W 16 OF E 156 OF N 142 FT OF
155232	NCB	3977	BLK	3	LOT W 50 FT OF E 100 FT OF 11, 12 & 13
155233	NCB	3977	BLK	3	LOT E 50 FT OF 11,12 & 13
385437	NCB	6919	BLK		LOT 9 & W 12.5 FT OF 10
385461	NCB	6919	BLK	0	LOT 49 AND 50
137634	NCB	2929	BLK	1	LOT S 50 FT OF 4, N 50 FT OF 8 & N 50 FT OF W 10 FT OF 9
385438	NCB	6919	BLK		LOT 11 & E 12.5 FT OF 10
385440	NCB	6919	BLK		LOT W 5 FT OF 12
385462	NCB	6919	BLK	0	LOT 51 AND 52
385439	NCB	6919	BLK		LOT E 20 FT OF 12 & W 15 FT OF 13
155191	NCB	3975	BLK	1	LOT 30
385463	NCB	6919	BLK		LOT 53 & W 15 FT OF 54
385441	NCB	6919	BLK	0	LOT 14 AND E 10 FT OF 13
155193	NCB	3975	BLK	1	LOT E 100 FT OF A12 (.230AC) & P-103 (.056AC)
155194	NCB	3975	BLK	1	LOT W 50FT OF E 150FT OF A12 (.1365) & P102 (.028)
137633	NCB	2929	BLK	1	LOT 3 & N 3 FT OF 4
385464	NCB	6919	BLK		LOT 55, E 10 FT OF 54 & W 2 FT OF 56
385442	NCB	6919	BLK		LOT 15 & W 12.5 FT OF 16
155210	NCB	3976	BLK	2	LOT 15
155211	NCB	3976	BLK	2	LOT 16
385465	NCB	6919	BLK		LOT E 23 FT OF 56 & W 12.5 FT OF 57
155212	NCB	3976	BLK	2	LOT 17
385443	NCB	6919	BLK		LOT 17 & E 12.5 FT OF 16
155213	NCB	3976	BLK	2	LOT 18
155214	NCB	3976	BLK	2	LOT 19
385466	NCB	6919	BLK		LOT 58 & E 12.5 FT OF 57
155215	NCB	3976	BLK	2	LOT 20
155209	NCB	3976	BLK	2	LOT W 70FT OF 13 &14 AT 105 FELISA

155216	NCB	3976	BLK	2	LOT 21
385444	NCB	6919	BLK		LOT 18 & W 12.5 FT OF 19
155217	NCB	3976	BLK	2	LOT 22
155208	NCB	3976	BLK	2	LOT E 70FT OF 13 &14
155218	NCB	3976	BLK	2	LOT 23
385467	NCB	6919	BLK		LOT 59 & W 12.5 FT OF 60
155219	NCB	3976	BLK	2	LOT 24
385445	NCB	6919	BLK		LOT 20 & E 12.5 FT OF 19
385468	NCB	6919	BLK		LOT 61 & E 12.5 FT OF 60
385428	NCB	6918	BLK		LOT SE IRR 14.6' OF 41
385446	NCB	6919	BLK		LOT 21 & W 12.5 FT OF 22
137632	NCB	2929	BLK	1	LOT 2, 7 & E 113.81 FT OF 1
385469	NCB	6919	BLK	0	LOT 62 AND 63
385447	NCB	6919	BLK		LOT 23 & E 12.5 FT OF 22
155206	NCB	3976	BLK	2	LOT E IRR 66 FT OF 12
385410	NCB	6918	BLK		LOT 24 & W 12.5 FT OF 25
385448	NCB	6919	BLK	0	LOT 24 W 15 FT OF 25
155186	NCB	3975	BLK	1	LOT 11 (.2500) & P-101 (.0620)
155207	NCB	3976	BLK	2	LOT W 45 FT OF 12
385411	NCB	6918	BLK		LOT W 22.5 FT OF 26 AND E 12.5 FT OF 25
385412	NCB	6918	BLK		LOT 27, E 2.5 FT OF 26 & W 12.5 FT OF 28
385449	NCB	6919	BLK		LOT 26, E 10 FT OF 25 & W 10 FT OF 27
385413	NCB	6918	BLK		LOT 29 & E 12.5 FT OF 28
385414	NCB	6918	BLK		LOT 30 & W 12.5 FT OF 32
385421	NCB	6918	BLK		LOT 33 & E 12.5 FT OF 32
385450	NCB	6919	BLK	0	LOT 28 AND E 15 FT OF 27
385422	NCB	6918	BLK		LOT 34 & W 12.5 FT OF 35
385419	NCB	6918	BLK		LOT W IRR 50 FT OF S 111.87 FT OF 31
155203	NCB	3976	BLK	2	LOT 9
385423	NCB	6918	BLK		LOT 36 & E 12.5 FT OF 35
155202	NCB	3976	BLK	2	LOT 8
385425	NCB	6918	BLK		LOT 37 38 AND SW IRR 7.52' OF 39
385451	NCB	6919	BLK		LOT 29 & 30
385426	NCB	6918	BLK		LOT SE IRR 17.48' OF 39
138611	NCB	2978	BLK	3	LOT SE 39.10 FT TRI OF LOT 160 ROOSEVELT AVE. - R.O.W.
155201	NCB	3976	BLK	2	LOT 7
385429	NCB	6918	BLK		LOT 40 & NE IRR 110.40' OF 41
155200	NCB	3976	BLK	2	LOT 6
385452	NCB	6919	BLK	0	LOT 31 AND 32
385420	NCB	6918	BLK		LOT W IRR 50 FT OF N 120.41 FT OF 31
385416	NCB	6918	BLK		LOT NW IRR 23.13' OF 31A
385453	NCB	6919	BLK	0	LOT 33
138608	NCB	2978	BLK	3	LOT S 86 OF 159
385408	NCB	6918	BLK		LOT W IRR 68.4' OF 23 & W IRR 93.96' OF S 12.5' OF 22
385409	NCB	6918	BLK		LOT E IRR 57.63' OF 23 & E IRR 31.68' OF S 12.5' OF 22
385393	NCB	6918	BLK	0	LOT 1&2

155197	NCB 3976	BLK	2	LOT 1 & 2
385394	NCB 6918	BLK		LOT 3 & 4
138610	NCB 2978	BLK	3	LOT N 45 S 131 OF 159
385395	NCB 6918	BLK	0	LOT 5&6
385406	NCB 6918	BLK		LOT 21 & N 12.5 FT OF 22 AT 719 MISSION RD
385396	NCB 6918	BLK	0	LOT 7&8
155185	NCB 3975	BLK	1	LOT 5
385397	NCB 6918	BLK		LOT 9 & 10
385398	NCB 6918	BLK	0	LOT 11 AND 12
385399	NCB 6918	BLK	0	LOT 13 AND 14
385400	NCB 6918	BLK	0	LOT 15 AND 16
138607	NCB 2978	BLK	3	LOT S 45 FT OF N 107 FT OF 159 OR A2
100402	NCB A20			LOT S130 OF E 98.6 OF A10 & NCB 2978 LOT N 90.9 OF S 129.9 FT OF LOT 160
385402	NCB 6918	BLK		LOT 17 AND W IRR 25 FT OF 18
385403	NCB 6918	BLK		LOT E 32.57 FT OF 18
385405	NCB 6918	BLK	0	LOT 19 AND 20
138609	NCB 2978	BLK	3	LOT N 63.5 FT OF 159
138583	NCB 2978	BLK	3	LOT S 137.5 FT OF 128
138582	NCB 2978	BLK	3	LOT E 50 FT OF 127
385392	NCB 6917	BLK		LOT 38 &39 AT 203 PARKVIEW DR
138580	NCB 2978	BLK	3	LOT W IRR 58.3 FT OF 127
385391	NCB 6917	BLK	0	LOT 36 AND 37
385384	NCB 6917	BLK		LOT W IRR 25 FT OF 23 & E IRR 25 FT OF 24
385385	NCB 6917	BLK	0	LOT W 50 FT OF 24
385386	NCB 6917	BLK	0	LOT 25 AND 26
385387	NCB 6917	BLK	0	LOT 27 AND 28
385359	NCB 6916	BLK		LOT E 118.37 FT OF 35 & 36
100404	NCB A-20	BLK		LOT 45 SCATS SUBD
385388	NCB 6917	BLK	0	LOT 29 AND 30
385389	NCB 6917	BLK	0	LOT 31 AND 32
385390	NCB 6917	BLK	0	LOT 33 34 AND 35
385380	NCB 6917	BLK	0	LOT 17 E 8 FT OF 16
385379	NCB 6917	BLK		LOT E 15 FT OF 15 & W 17 FT OF 16
385378	NCB 6917	BLK	0	LOT E 23 FT OF 14 W 10 OF 15
385377	NCB 6917	BLK	0	LOT 13 W 2 FT OF 14 E 6 FT OF 12
385372	NCB 6917	BLK		LOT E 22 FT OF 9 & W 11 FT OF 11
385371	NCB 6917	BLK		LOT 8, E 5 FT OF 7 & W 3 FT OF 9
385370	NCB 6917	BLK		LOT E 13 FT OF 6 & W 20 FT OF 7
385369	NCB 6917	BLK		LOT E 21 FT OF 5 & W 12 FT OF 6
385368	NCB 6917	BLK		LOT 4, E 4 FT OF 3 & W 4 FT OF 5
385367	NCB 6917	BLK		LOT E 12.5 FT OF 2 & W 21 FT OF 3
385366	NCB 6917	BLK		LOT 1 & W 12.5 FT OF 2
385361	NCB 6916	BLK	0	LOT 40 E 5 FT OF 41
1011413	NCB 6916	BLK		LOT 42, 43, W 20 FT OF 41 & E 15.5 FT OF 44
100322	NCB 20	BLK		LOT B5

138564	NCB 2977 BLK 2	LOT 129 MISSFION FIELD SUBDIVISION
100321	NCB 20 BLK	LOT B4
100379	NCB 20 BLK	LOT 34 AND A10
100320	NCB 20 BLK	LOT B3
100319	NCB 20 BLK	LOT S 27.5 FT OF N277.5FT OF E130FT OF
100318	NCB 20	LOT N 1/2 OF 5,S 50 OFN250 OF E IRR 167OF A10& N 50 OF S 275 OF 161 NCB2977ARB B-1
100123	NCB A-9 BLK E 1/2	LOT E 33 FT OF W 630 FT OF S 125 FT OF A7 OR O
100122	NCB A-9 BLK E 1/2	LOT E 40 FT OF W 597 FT OF S 125 FT OF A7 OR N
100121	NCB A-9 BLK E 1/2	LOT E 40 FT OF W 557 FT OF S 125 FT OF A7 OR M
100120	NCB A-9 BLK E 1/2	LOT E 33 FT OF W 517 FT OF S 125 FT OF A7 OR L
100119	NCB A-9 BLK E 1/2	LOT E 33 FT OF W 484 FT OF S 125 FT OF A7 OR K
100117	NCB A-9 BLK E 1/2	LOT E 33 FT OF W 451 FT OF S 125 FT OF A7 OR F
100115	NCB A-9 BLK	LOT E 37 FT OF W 418 FT OF S 125 FT OF A7 OR ARB J
100131	NCB A-9	LOT 19 LLANAS SUBDIVISION
100111	NCB A-9 BLK E 1/2	LOT E 33 FT OF W 348 FT OF S 125 FT OF A7 OR H
100116	NCB A-9 BLK	LOT E IRR 125 FT OF S 125 FT & N IRR 101.8 FT OF A7
136194	NCB 2854 BLK 8	LOT 3
136191	NCB 2853 BLK 7	LOT N 33.5 FT OF 9 THRU 14 & NW TRI 33.5 FT OF 8
100356	NCB 20 BLK	LOT 10G
100386	NCB 20 BLK	LOT 35
100389	NCB 20 BLK	LOT 36
112944	NCB 20 BLK	LOT 56
136190	NCB 2853 BLK 7	LOT 6
136189	NCB 2853 BLK 7	LOT 3, 4 & 5
136187	NCB 2853 BLK 7	LOT 2
100392	NCB A-20 BLK	LOT 42
136186	NCB 2853 BLK 7	LOT 1
1121883	NCB A-20 BLK	LOT 55 (MISSION ROAD JUVENILE CAMPUS)
136182	NCB 2852 BLK	LOT 23, E 20.69 FT OF N 50 FT OF 6 & N 50 FT OF 7 & 8
100355	NCB 20 BLK	LOT 10D
100390	NCB A-20 BLK	LOT 40
100351	NCB 20 BLK	LOT Z
100353	NCB 20 BLK	LOT 10B
136175	NCB 2851 BLK 4	LOT 8- 11
136174	NCB 2851 BLK 4	LOT 6-7 & E 10 FT OF 1 & 2 & E 10 FT OF 5
136173	NCB 2851 BLK 4	LOT W 30 FT OF 5-E 20 FT OF 4 & W 50 FT OF E 60 FT OF 1 & 2
136172	NCB 2851 BLK 4	LOT 3 W 60 FT OF 1 & 2 & W 20 FT OF 4
100391	NCB A-20 BLK	LOT 41
1114894	NCB A-20	LOT P-105
100429	NCB A-20 BLK 1	LOT 47 (BALLPARK SUBD)
100418	NCB 20 BLK	LOT NE TRI 25.8 FT OF A8 (MISSION RD - R.O.W.)
1128808	NCB A-9 BLK E1/2	LOT S IRR 9.11FT OF 18
100417	NCB 20 BLK	LOT SE IRR 117.83 FT OF A8

100113	NCB A-9 BLK E1/2	LOT N IRR 716.02FT OF 18, ARB 3C, PT OF 3D, PT OF A10 ARB 3A, 3B & NCB A-17 PT 9B
385454	NCB 6919 BLK	LOT 34 AND 35
1138483	NCB 6916 BLK	LOT 64 (SAWS MISSION ROAD PUMP STATION)
100373	NCB 20 BLK	LOT PT OF TR-21 ARB TR-21E
100114	NCB A-9 BLK	LOT 20 CONCOR SUBD
136179	NCB 2852 BLK	LOT 21 & 22 (LADD LITTLE SUBD UT-4)
155198	NCB 3976 BLK 2	LOT 3, 4 & 5
100107	NCB A-9 BLK E 1/2	LOT E 33 FT OF W 655 FT OF N 125 FT OF A6 OR 6K
100104	NCB A-9 BLK E 1/2	LOT E 33 FT OF W 556 FT OF N 125 FT OF A6 OR 6G
100103	NCB A-9 BLK E 1/2	LOT E 33 FT OF W 523 FT OF N 125 FT OF A6 OR 6F
100102	NCB A-9 BLK E 1/2	LOT E 33 FT OF W 490 FT OF N 125 FT OF A6 OR 6E
100099	NCB A-9 BLK E 1/2	LOT E 33 FT OF W 457 FT OF N 125 FT OF A6 OR 6D
100094	NCB A-9 BLK	LOT E 50 FT OF W 424 FT OF N 125 FT OF A-6
100106	NCB A-9 BLK E 1/2	LOT E 33 FT OF W 622 FT OF N 125 FT OF A6 OR 6J
100108	NCB A-9 BLK E1/2	LOT E 33 FT OF W 688 FT OF N 125 FT OF A6 OR 6L
100105	NCB A-9 BLK E 1/2	LOT E 33 FT OF W 589 FT OF N 125 FT OF A6 OR 6H
100096	NCB A-9 BLK E 1/2	LOT E 66 OF W 341 OF N 125 OF A-6 OR 6C1
100097	NCB A-9 BLK E 1/2	LOT E 33 OF W 374 OF N 125 OF A-6 OR 6C2
100369	NCB 20 BLK	LOT TR-21B
1138482	NCB 6916 BLK	LOT 46 (SAWS MISSION ROAD PUMP STATION)
385358	NCB 6916 BLK 0	LOT 33 AND 34
1138478	NCB 6915 BLK	LOT 47 (SAWS MISSION ROAD PUMP STATION)
1114416	NCB 6916 BLK	LOT W IRR 25.36 FT OF 37, 38 & 39
1113118	NCB 6916 BLK	LOT W IRR 29.7 FT OF 35 & 36
100110	NCB A-9 BLK E1/2	LOT E 41.6 OF W 726.6 OF A6 OR 6M
1113099	NCB 6916 BLK	LOT 45 & W 9.46 FT OF 44
1138479	NCB 6916 BLK	LOT 48 (SAWS MISSION ROAD PUMP STATION)
100091	NCB A-9 BLK E1/2	LOT W IRRG 275' OF A-6 OR 6A
1057830	NCB 20 BLK	LOT 54 EXC NE IRR 202.76FT
1166286	NCB A-20	(MISSION CONCEPCION SPORTS PARK), LOT 901
1158471	NCB 20 BLK	PART OF A-15 (P-109)
1057831	NCB 20 BLK	NE IRR 202.76FT OF 54 (9.7014 AC) & PART OF A-15 (ARB TR-21E) (.8806 AC)
1057829	NCB 20 BLK	LOT PART OF A-15 (ARB TR-21) \13.9407 AC\, & P-112 (0.202 AC)
1166320	NCB A-20	(MISSION CONCEPCION SPORTS PARK), LOT 58
1158475	NCB A-20 BLK	PART OF A-15 (0.5142 AC) ARB P-110
100095	NCB A-9 BLK	LOT SE IRR PT OF A-6
100419	NCB 20 BLK	LOT 51; NCB 820 BLK LOT 49 EXC SE 142.22 FT
155317	NCB 3980 BLK 6	LOT 11 & 12
385383	NCB 6917 BLK 0	LOT 18, 19, N IRR 98.13 FT OF 10, W IRR 110 FT OF 20, 21, 22, & E IRR 50 FT OF 23 & P-100
1216228	NCB 6916 BLK	LOT 49 (PARKVIEW)
138258	NCB 2961 BLK 2	LOT S 25 FT OF 16 & N 43.5 FT OF 17
155204	NCB 3976 BLK 2	LOT 10 & 11

The following properties are amended by adding the Mission Protection Overlay District 2, "MPOD-2":

Property ID	Legal Description
398428	NCB 7676 BLK LOT N IRR 82.2 FT OF 3 & 4
494679	NCB 11911 BLK 7 LOT 33 RANEY SUBD
494670	NCB 11911 BLK 7 LOT E 649FT OF NW IRR 822.73 FT OF 27
494654	NCB 11911 BLK 7 LOT 13
494649	NCB 11911 BLK 7 LOT 8
494650	NCB 11911 BLK 7 LOT 9
494651	NCB 11911 BLK 7 LOT 10
494653	NCB 11911 BLK 7 LOT 12
494655	NCB 11911 BLK 7 LOT 14
494652	NCB 11911 BLK 7 LOT 11
397916	NCB 7657 BLK LOT N 180 FT OF 10
494656	NCB 11911 BLK 7 LOT 15
494702	NCB 11912 BLK 8 LOT 19
494703	NCB 11912 BLK 8 LOT 20
494701	NCB 11912 BLK 8 LOT 18
494700	NCB 11912 BLK 8 LOT 17
494699	NCB 11912 BLK 8 LOT 16
494704	NCB 11912 BLK 8 LOT 21
494657	NCB 11911 BLK 7 LOT 16
494666	NCB 11911 BLK 7 LOT 25
494705	NCB 11912 BLK 8 LOT 22
494706	NCB 11912 BLK 8 LOT 23
494658	NCB 11911 BLK 7 LOT 17
494707	NCB 11912 BLK 8 LOT 24
494694	NCB 11912 BLK 8 LOT 11
494693	NCB 11912 BLK 8 LOT 10
494692	NCB 11912 BLK 8 LOT 9
494691	NCB 11912 BLK 8 LOT 8
494690	NCB 11912 BLK 8 LOT 7
494689	NCB 11912 BLK 8 LOT 6
494688	NCB 11912 BLK 8 LOT 5
494687	NCB 11912 BLK 8 LOT 4
494659	NCB 11911 BLK 7 LOT 18
397936	NCB 7658 BLK LOT 17
494660	NCB 11911 BLK 7 LOT 19
494661	NCB 11911 BLK 7 LOT 20
494734	NCB 11913 BLK 9 LOT 27
494733	NCB 11913 BLK 9 LOT 26
494732	NCB 11913 BLK 9 LOT 25

494731	NCB 11913	BLK	9	LOT 24
494730	NCB 11913	BLK	9	LOT 23
494723	NCB 11913	BLK	9	LOT 16
494729	NCB 11913	BLK	9	LOT 22
494728	NCB 11913	BLK	9	LOT 21
1062909	NCB 11913	BLK	9	LOT 20
494726	NCB 11913	BLK	9	LOT 19
494724	NCB 11913	BLK	9	LOT 17
494725	NCB 11913	BLK	9	LOT 18
494662	NCB 11911	BLK	7	LOT 21
494663	NCB 11911	BLK	7	LOT 22
397937	NCB 7658	BLK	2	LOT 18, 19 & 20
397907	NCB 7657	BLK		LOT 1 THRU 9,11 S 201.9 FT OF 10, W 78.18 FT OF 12, P5A & P6A
494708	NCB 11913	BLK	9	LOT 1
397949	NCB 7658	BLK		LOT 35
494709	NCB 11913	BLK	9	LOT 2
494664	NCB 11911	BLK	7	LOT 23
494667	NCB 11911	BLK	7	LOT N IRR 271.36 FT OF TR-A
494665	NCB 11911	BLK	7	LOT 24
494721	NCB 11913	BLK	9	LOT 14
494720	NCB 11913	BLK	9	LOT 13
494719	NCB 11913	BLK	9	LOT 12
494718	NCB 11913	BLK	9	LOT 11
494717	NCB 11913	BLK	9	LOT 10
494716	NCB 11913	BLK	9	LOT 9
494715	NCB 11913	BLK	9	LOT 8
494714	NCB 11913	BLK	9	LOT 7
494713	NCB 11913	BLK	9	LOT 6
494712	NCB 11913	BLK	9	LOT 5
494711	NCB 11913	BLK	9	LOT 4
494710	NCB 11913	BLK	9	LOT 3
397940	NCB 7658	BLK		LOT 21
397929	NCB 7658	BLK		LOT 34
397941	NCB 7658	BLK		LOT 22
494877	NCB 11919	BLK	15	LOT 9
494751	NCB 11914	BLK	10	LOT 17
494752	NCB 11914	BLK	10	LOT 18
494764	NCB 11914	BLK	10	LOT 30
494763	NCB 11914	BLK	10	LOT 29
494762	NCB 11914	BLK	10	LOT 28
494758	NCB 11914	BLK	10	LOT 24
494759	NCB 11914	BLK	10	LOT 25
494753	NCB 11914	BLK	10	LOT 19
494757	NCB 11914	BLK	10	LOT 23
494760	NCB 11914	BLK	10	LOT 26

494761	NCB 11914	BLK	10	LOT 27
494756	NCB 11914	BLK	10	LOT 22
494755	NCB 11914	BLK	10	LOT 21
494754	NCB 11914	BLK	10	LOT 20
494876	NCB 11919	BLK	15	LOT 8
1104220	NCB 11919	BLK	15	LOT 15 (H.R. BHAKTA SUB'D)
494882	NCB 11919	BLK	15	LOT 14 /C/
397945	NCB 7658	BLK		LOT S 50 FT OF W 55.5 FT OF 29
397928	NCB 7658	BLK		LOT 32 & 33
398152	NCB 7669	BLK		LOT 11
494875	NCB 11919	BLK	15	LOT 7
398147	NCB: 7669			LOT SW 155 FT OF 8
494735	NCB 11914	BLK	10	LOT 1
397948	NCB 7658	BLK		LOT 31
494881	NCB 11919	BLK	15	LOT 13 /C/
494736	NCB 11914	BLK	10	LOT 2
494737	NCB 11914	BLK	10	LOT 3
494749	NCB 11914	BLK	10	LOT 15
494748	NCB 11914	BLK	10	LOT 14
494747	NCB 11914	BLK	10	LOT 13
494746	NCB 11914	BLK	10	LOT 12
494750	NCB 11914	BLK	10	LOT 16
494745	NCB 11914	BLK	10	LOT 11
494744	NCB 11914	BLK	10	LOT 10
494743	NCB 11914	BLK	10	LOT 9
494742	NCB 11914	BLK	10	LOT 8
494741	NCB 11914	BLK	10	LOT 7
494740	NCB 11914	BLK	10	LOT 6
494738	NCB 11914	BLK	10	LOT 4
494739	NCB 11914	BLK	10	LOT 5
494874	NCB 11919	BLK	15	LOT 6
397931	NCB 7658	BLK		LOT 38
398144	NCB 7669	BLK		LOT S 325 FT OF 7
397927	NCB 7658	BLK		LOT W 74.1 FT OF 30
494873	NCB 11919	BLK	15	LOT 5
397946	NCB 7658	BLK		LOT E 37.2 FT OF 29
398158	NCB 7670	BLK		LOT 1
397947	NCB 7658	BLK		LOT E 55.5 FT OF W111 FT OF 29
398159	NCB 7670	BLK		LOT 2
398151	NCB 7669	BLK		LOT S 173 FT OF 10
494872	NCB 11919	BLK	15	LOT 4
397944	NCB 7658	BLK		LOT N 244 FT OF W 55.5 FT OF 29
494783	NCB 11915	BLK	11	LOT 19
494784	NCB 11915	BLK	11	LOT 20
494880	NCB 11919	BLK	15	LOT N IRRG 175 FT OF TR A
494785	NCB 11915	BLK	11	LOT 21

398154	NCB 7669	BLK		LOT 13
398149	NCB 7669	BLK		LOT S 325 FT OF 9
494786	NCB 11915	BLK	11	LOT 22
494799	NCB 11915	BLK	11	LOT 35
494798	NCB 11915	BLK	11	LOT 34
494797	NCB 11915	BLK	11	LOT 33
494796	NCB 11915	BLK	11	LOT 32
494795	NCB 11915	BLK	11	LOT 31
494793	NCB 11915	BLK	11	LOT 29
494792	NCB 11915	BLK	11	LOT 28
494791	NCB 11915	BLK	11	LOT 27
494790	NCB 11915	BLK	11	LOT 26
494789	NCB 11915	BLK	11	LOT 25
494787	NCB 11915	BLK	11	LOT 23
494788	NCB 11915	BLK	11	LOT 24
494871	NCB 11919	BLK	15	LOT 3
397942	NCB 7658	BLK	2	LOT 23, 24, 28 & PT OF 25 & 27
398183	NCB 7671	BLK		LOT 14
398161	NCB 7670	BLK		LOT 3 THRU 5
398153	NCB 7669	BLK		LOT 12
494870	NCB 11919	BLK	15	LOT 2
398185	NCB 7671	BLK		LOT 16
398182	NCB 7671	BLK		LOT S 47 FT OF 13
398164	NCB 7670	BLK		LOT 6
398184	NCB 7671	BLK		LOT 15
494765	NCB 11915	BLK	11	LOT 1
494766	NCB 11915	BLK	11	LOT 2
398181	NCB 7671	BLK		LOT 12 & N 3FT OF 13
494767	NCB 11915	BLK	11	LOT 3
398360	NCB 7675	BLK		LOT S IRR 75.01 FT OF 1
398165	NCB 7670	BLK		LOT 7
494768	NCB 11915	BLK	11	LOT 4
494782	NCB 11915	BLK	11	LOT 18
494781	NCB 11915	BLK	11	LOT 17
494780	NCB 11915	BLK	11	LOT 16
494869	NCB 11919	BLK	15	LOT 1
494779	NCB 11915	BLK	11	LOT 15
494778	NCB 11915	BLK	11	LOT 14
494777	NCB 11915	BLK	11	LOT 13
494878	NCB 11919	BLK	15	LOT 10
494776	NCB 11915	BLK	11	LOT 12
494775	NCB 11915	BLK	11	LOT 11
494774	NCB 11915	BLK	11	LOT 10
494773	NCB 11915	BLK	11	LOT 9
494772	NCB 11915	BLK	11	LOT 8
494771	NCB 11915	BLK	11	LOT 7

494769	NCB 11915	BLK 11	LOT 5
494770	NCB 11915	BLK 11	LOT 6
398166	NCB 7670	BLK	LOT 8
398180	NCB 7671	BLK	LOT 11
398143	NCB 7669	BLK	LOT N 325 FT OF 7 EXC E 50 OF N 150 FT
398361	NCB 7675	BLK	LOT N 92.69 FT OF 1
398179	NCB 7671	BLK	LOT 10
398167	NCB 7670	BLK	LOT 9 & S 21.1 FT OF 10
398146	NCB: 7669		LOT N 495' OF 8 REFER TO: 81900-015-3376
494864	NCB 11918	BLK 14	LOT 7
398178	NCB 7671	BLK	LOT 9
494819	NCB 11916	BLK 12	LOT 20
398168	NCB 7670	BLK	LOT S 31.7 FT OF 11 & N 21 FT OF 10
494820	NCB 11916	BLK 12	LOT 21
398148	NCB 7669	BLK	LOT N 325 FT OF 9
494821	NCB 11916	BLK 12	LOT 22
494822	NCB 11916	BLK 12	LOT 23
494823	NCB 11916	BLK 12	LOT 24
494824	NCB 11916	BLK 12	LOT 25
494825	NCB 11916	BLK 12	LOT 26
494826	NCB 11916	BLK 12	LOT 27
494827	NCB 11916	BLK 12	LOT 28
494828	NCB 11916	BLK 12	LOT 29
494829	NCB 11916	BLK 12	LOT 30
494830	NCB 11916	BLK 12	LOT 31
494831	NCB 11916	BLK 12	LOT 32
494832	NCB 11916	BLK 12	LOT 33
494833	NCB 11916	BLK 12	LOT 34
494834	NCB 11916	BLK 12	LOT 35
494835	NCB 11916	BLK 12	LOT 36
494836	NCB 11916	BLK 12	LOT 37
494863	NCB 11918	BLK 14	LOT 6
494837	NCB 11916	BLK 12	LOT 38
398177	NCB 7671	BLK	LOT 8
1136150	NCB 7670	BLK	LOT 12 & N 10.5 FT OF 11
398373	NCB 7675	BLK	LOT SW TRI 222.2 FT OF 7
494865	NCB 11918	BLK 14	LOT 8
398150	NCB 7669	BLK	LOT N 325 FT OF 10
494862	NCB 11918	BLK 14	LOT 5
1103493	NCB 7670	BLK	LOT14
494800	NCB 11916	BLK 12	LOT 1
398169	NCB 7670	BLK	LOT 13
494801	NCB 11916	BLK 12	LOT 2
494861	NCB 11918	BLK 14	LOT 4
494802	NCB 11916	BLK 12	LOT 3
494803	NCB 11916	BLK 12	LOT 4

494804	NCB 11916	BLK 12	LOT 5
494805	NCB 11916	BLK 12	LOT 6
494806	NCB 11916	BLK 12	LOT 7
494807	NCB 11916	BLK 12	LOT 8
494808	NCB 11916	BLK 12	LOT 9
494809	NCB 11916	BLK 12	LOT 10
494810	NCB 11916	BLK 12	LOT 11
494811	NCB 11916	BLK 12	LOT 12
494812	NCB 11916	BLK 12	LOT 13
494813	NCB 11916	BLK 12	LOT 14
494814	NCB 11916	BLK 12	LOT 15
494815	NCB 11916	BLK 12	LOT 16
494816	NCB 11916	BLK 12	LOT 17
494817	NCB 11916	BLK 12	LOT 18
494818	NCB 11916	BLK 12	LOT 19
398175	NCB 7671	BLK	LOT 6
398172	NCB 7671	BLK	LOT 3
398174	NCB 7671	BLK	LOT 5
494860	NCB 11918	BLK 14	LOT 3
494866	NCB 11918	BLK 14	LOT 9 J WEISS SUBD
398171	NCB 7671	BLK	LOT 2
398385	NCB 7675	BLK	LOT S 200' OF E IRR 128' OF 15
494859	NCB 11918	BLK 14	LOT 2 AT 106 ADELPHIA
398381	NCB 7675	BLK	LOT S 160 FT OF W 27 FT OF 15 & S 160 FT OF E 42 FT OF 16
398170	NCB 7671	BLK	LOT 1
398365	NCB 7675	BLK	LOT S 74.75 FT OF 4
398410	NCB 7675	BLK	LOT 36
494858	NCB 11918	BLK 14	LOT 1
494867	NCB 11918	BLK 14	LOT N IRR 135.4 FT OF TR-A .363 AC
494857	NCB 11917	BLK 13	LOT 20
494856	NCB 11917	BLK 13	LOT 19
494855	NCB 11917	BLK 13	LOT 18
494854	NCB 11917	BLK 13	LOT 17
494853	NCB 11917	BLK 13	LOT 16
494852	NCB 11917	BLK 13	LOT 15
494850	NCB 11917	BLK 13	LOT 13
494851	NCB 11917	BLK 13	LOT 14
494848	NCB 11917	BLK 13	LOT 11
494849	NCB 11917	BLK 13	LOT 12
494847	NCB 11917	BLK 13	LOT 10
494844	NCB 11917	BLK 13	LOT 7
494843	NCB 11917	BLK 13	LOT 6
494845	NCB 11917	BLK 13	LOT 8
494846	NCB 11917	BLK 13	LOT 9
494842	NCB 11917	BLK 13	LOT 5

494841	NCB 11917	BLK	13	LOT 4
494838	NCB 11917	BLK	13	LOT 1
494839	NCB 11917	BLK	13	LOT 2
494840	NCB 11917	BLK	13	LOT 3
398366	NCB 7675	BLK		LOT N 74.75 FT OF 4
398376	NCB 7675	BLK		LOT SE IRR 445 FT OF 14 REFER TO MH ACCT 81900-015-5607
398379	NCB 7675	BLK		LOT N 149 FT OF S 349 FT OF E 148.41FT OF 15 & NW IRR 235.93 FT OF 14
398412	NCB 7675	BLK		LOT 37, S 100' OF 16 & N IRR 100X27' OF SW 260' OF 15
398393	NCB 7675	BLK		LOT S 140 FT OF 18 OR C
398420	NCB 7675	BLK		LOT S IRR 20 FT OF 44
398010	NCB 7661	BLK 1		LOT S IRR 142 FT OF H2
398004	NCB 7661	BLK		LOT S IRR 65.5 FT OF G
398011	NCB 7661	BLK		LOT N IRR 188 FT OF H2
398369	NCB 7675	BLK		LOT 5
397997	NCB 7661	BLK		LOT S 130.7 FT OF D
398008	NCB 7661			N IRR 3 FT OF H-1
398731	NCB 7688	BLK	22	LOT 39
398732	NCB 7688	BLK	22	LOT 40
398725	NCB 7688	BLK	22	LOT 33
398729	NCB 7688	BLK	22	LOT 37
398730	NCB 7688	BLK	22	LOT 38
398726	NCB 7688	BLK	22	LOT 34
398727	NCB 7688	BLK	22	LOT 35
398728	NCB 7688	BLK	22	LOT 36
398720	NCB 7688	BLK	22	LOT 23
398719	NCB 7688	BLK	22	LOT 22
398718	NCB 7688	BLK	22	LOT 21
398722	NCB 7688	BLK	22	LOT 25 THRU 28
398392	NCB 7675	BLK		LOT N 95 FT OF S 235 FT OF 18 OR B
398002	NCB 7661	BLK		LOT N IRR 65.5 FT OF G LESS N IRR 3 FT
398003	NCB 7661	BLK		LOT N IRR 3 FT OF G
398391	NCB 7675	BLK		LOT NE 48.2 FT OF SW 283.2 FT OF 18 REFER TO: 80600-000-0184
398388	NCB 7675	BLK		LOT N 100 FT OF 16 ARB 16A,W 25 OF 15 ARB 15A, & N IRR 50 OF 44 ARB 44A
397970	NCB 7659	BLK		LOT S IRR 144.25 FT OF 2
397954	NCB 7659			LOT 3 STATE PARK
397969	NCB 7659	BLK		LOT S IRR 145.26 FT OF 1
398417	NCB 7675	BLK		LOT 42
397999	NCB 7661			SW IRR 235.59 FT OF LOTS E & F
398000	NCB 7661			NW IRR 3.61 FT OF LOTS E & F
398416	NCB 7675	BLK		LOT NE IRR 7.71 FT OF 41
397953	NCB 7659	BLK		LOT N 54.74 FT OF 1 & N IRR 54.74 FT OF 2

397955	NCB	7659	BLK		LOT 4B
397996	NCB	7661	BLK		LOT E 7.42 FT TRI OF B MISSION RD R.O.W.
398708	NCB	7688	BLK	22	LOT W 50 FEET OF 3
398709	NCB	7688	BLK	22	LOT W 50 FT OF 4 & 25 FT OF 3
398710	NCB	7688	BLK	22	LOT E 25 FT OF 4 & W 25 FT OF 5
398711	NCB	7688	BLK	22	LOT E 50 FEET OF 5
398712	NCB	7688	BLK	22	LOT 6
398713	NCB	7688	BLK	22	LOT 7
398714	NCB	7688	BLK	22	LOT 8
398715	NCB	7688	BLK	22	LOT 9
398716	NCB	7688	BLK	22	LOT 10 AT 420 HUFF E
398717	NCB	7688	BLK	22	LOT W 50 FEET OF 11
398723	NCB	7688	BLK	22	LOT 29- 30
398724	NCB	7688	BLK	22	LOT 31
397995	NCB	7661	BLK		LOT W IRR 10 FT OF B & N 79.5 FT OF D
397971	NCB	7659	BLK		LOT 4A
397956	NCB	7659	BLK		LOT 4C
397957	NCB	7659	BLK		LOT 4D
397958	NCB	7659	BLK		LOT 4E
398749	NCB	7689	BLK	15	LOT 19
398415	NCB	7675	BLK		LOT N IRR 175.65 FT OF 41
397962	NCB	7659	BLK		LOT 4F
398395	NCB	7675	BLK		LOT S IRR 108.32 FT OF W 376.02 FT OF 19
397964	NCB	7659	BLK		LOT 5
398748	NCB	7689	BLK	15	LOT 18
398389	NCB	7675	BLK		LOT 17 EXC N IRR 387.5 FT OF W IRR 63.7 FT
398747	NCB	7689	BLK	15	LOT 17 EXC NE TRI 5FT
397972	NCB	7659	BLK		LOT W IRR 190 FT OF N IRR 75.2 FT OF 6
398757	NCB	7689	BLK	15	LOT 27
398756	NCB	7689	BLK	15	LOT 26
398755	NCB	7689	BLK	15	LOT 25
398754	NCB	7689	BLK	15	LOT 24
398753	NCB	7689	BLK	15	LOT 23
398752	NCB	7689	BLK	15	LOT 22 #495-072223-235
398751	NCB	7689	BLK	15	LOT 21
398750	NCB	7689	BLK	15	LOT 20
398746	NCB	7689	BLK	15	LOT 16 & NE TRI 5 FT OF 17
397990	NCB	7660	BLK		LOT 4
397991	NCB	7660	BLK		LOT 5
398745	NCB	7689	BLK	15	LOT 15
397992	NCB	7660	BLK		LOT Q
397989	NCB	7660	BLK		LOT 3
398390	NCB	7675	BLK		LOT N IRR 387.5 FT OF 17 & N IRR 556.5 FT OF 18
397988	NCB	7660	BLK		LOT 2
1055603	NCB	7675	BLK		LOT 25A, 26A, & 27A
398763	NCB	7689	BLK	15	LOT 33

398739	NCB	7689	BLK	15	LOT 7
398742	NCB	7689	BLK	15	LOT 10
398762	NCB	7689	BLK	15	LOT 32
398743	NCB	7689	BLK	15	LOT 11
398744	NCB	7689	BLK	15	LOT 12
398740	NCB	7689	BLK	15	LOT 8
398741	NCB	7689	BLK	15	LOT 9
397985	NCB	7660	BLK		LOT NW 13.13 FT TRI OF TR-3 MISSION RD R.O.W.
398394	NCB	7675	BLK		LOT N IRR 405.57 FT OF 19 REFER TO: 81800-000-0190
398932	NCB	7696	BLK	14	LOT E 22.11 FT TRI OF 17 MISSION RD R.O.W.
398931	NCB	7696	BLK	14	LOT W 169.89 FT OF 17
398929	NCB	7696	BLK	14	LOT 16
398928	NCB	7696	BLK	14	LOT 15
398935	NCB	7696	BLK	14	LOT 20
398934	NCB	7696	BLK	14	LOT 19
398933	NCB	7696	BLK	14	LOT 18
398927	NCB	7696	BLK	14	LOT 14
398925	NCB	7696	BLK	14	LOT 13
398114	NCB	7667	BLK		LOT 18
398115	NCB	7667	BLK		LOT A
398116	NCB	7667	BLK		LOT B
398126	NCB	7668	BLK		LOT 7
398117	NCB	7667	BLK		LOT C
398944	NCB	7696	BLK	14	LOT 32
398127	NCB	7668	BLK		LOT 8
398128	NCB	7668	BLK		LOT 9
398110	NCB	7667	BLK		LOT 9
398227	NCB	7674	BLK		LOT B
398409	NCB	7675	BLK		LOT 35 EXC NE TRI 13.4 & SW 36.63 TRI OF 20B & W IRR 5.8 FT OF 21F
398112	NCB	7667	BLK		LOT 12
1055602	NCB	7675	BLK		LOT W IRR PT OF 22 THRU 26 & E IRR 72.85 FT OF W 381.66 FT OF 27
398119	NCB	7668	BLK		LOT 1
398226	NCB	7674	BLK		LOT A
398314	NCB	7674	BLK	D	LOT E IRR 168.16FT OF F (OUT OF TR-3)
398120	NCB	7668	BLK		LOT 2, 3 & NW IRR 21.3 FT OF 15
398133	NCB	7668	BLK		LOT 15, EXC NW 21.3 FT & SE IRR 152.82 FT
398122	NCB	07668			LOT 4 & W 10 FT OF 5
398124	NCB	07668			LOT E 20 FT OF W 30 FT OF 5
418693	NCB	8619	BLK		LOT 1A
398125	NCB	7668			LOT 6 & E 10 FT OF 5
418695	NCB	8619	BLK		LOT W 25.7 FT OF N 100 FT OF 1
418691	NCB	8618	BLK		LOT 13
398288	NCB	7674	BLK	D	LOT S IRR 268.19 FT OF TR 3 OR A &

	W 53 FT OF S 140 FT OF B			
418704	NCB 8619	BLK		LOT 6A
418694	NCB 8619	BLK		LOT NE 55 FT OF SW 80 FT OF NW 100 FT OF 1 OR 1B
398299	NCB 7674	BLK	D	LOT E 100 OF S 140 OF B OR PT OF TR 3
418690	NCB 8618	BLK		LOT 12
418696	NCB 8619	BLK		LOT NE 40 FEET OF NW 100 FEET OF 1
398305	NCB 7674	BLK	D	LOT W 50 OF S IRR 141.7 FT OF C OUT OF TR 3
418699	NCB 8619	BLK		LOT SE 120 FEET OF 2
418689	NCB 8618	BLK		LOT 11
398336	NCB 7674	BLK		LOT 15
418711	NCB 8619	BLK		LOT 35
418698	NCB 8619	BLK		LOT 2A
418688	NCB 8618	BLK		LOT 10
418697	NCB 8619	BLK		LOT SW 40.7 FEET BY 100 FEET OF 2
398413	NCB 7675	BLK		LOT 38
418687	NCB 8618	BLK		LOT 9
418708	NCB 8619	BLK		LOT 30
418686	NCB 8618	BLK		LOT 8
418685	NCB 8618	BLK		LOT 7
418700	NCB 8619	BLK		LOT W IRRG 129 FEET OF 3
418684	NCB 8618	BLK		LOT 6
418701	NCB 8619	BLK		LOT 4, 5B & E IRRG 23.1 FT OF 3
418714	NCB 8619	BLK		LOT 38 SAN JOSE SUBD
418712	NCB 8619	BLK		LOT 36
397993	NCB 7660	BLK	1	LOT 6 EUGENE GARCIA PROPERTY SUBD
397980	NCB 7660	BLK		LOT 1
397984	NCB 7660	BLK		LOT N 33 FT OF NW 136.87 FT OF TR3
1162332	NCB 7660			(LA POSADA DEL REY SUBD), BLOCK 1 LOT 7
397960	NCB 7659	BLK		LOT 7 ROSARIO SUBDIVISION, W IRR 27.09 FT OF E IRR 79.37 FT OF 6 EXCEPT S IRR 4 FT
398176	NCB 7671	BLK		LOT 4 & 7
398469	NCB 7676	BLK		LOT SW TRI 44.35FT OF B OR B6
398443	NCB 7676	BLK		LOT E TRI 44.61 FT OF B5 & P-100 (PT OF ST CLOSURE-MISSION RD)
398470	NCB 7676	BLK		LOT S IRR 61.35 FT OF B7
398464	NCB 7676	BLK		LOT S IRR 26.19 FT OF B2
398436	NCB 7676	BLK		LOT 6I
398439	NCB 7676	BLK		LOT 7
398433	NCB 7676	BLK		LOT 6H
1169407	NCB 7676			(CARVAJAL SUBD), LOT 22
398442	NCB 7676	BLK		LOT 26
1062904	NCB 7676	BLK		LOT 35 (MISSION MERCADO)
398474	NCB 7676	BLK		LOT 18
398473	NCB 7676	BLK		LOT 17
398406	NCB 7675	BLK		LOT W IRR 680.20FT OF 33

1178921	NCB 7675	(MISSION COUNTY PARK), LOT 40
1184118	NCB 7667 BLK	LOT 10
398111	NCB 7667 BLK	LOT 11
398109	NCB: 7667	LOT 2-8, 13-17, P-100 & N IRR 28.16 FT OF 1 LEGAL# TXS0505347
398131	NCB 7668 BLK	LOT 10 THRU 14 & SE IRR 152.82 FT OF 15
398370	NCB 7675 BLK	LOT 6
398363	NCB: 7675	LOT: 2, 3, 34 & N TRI 421.93' OF 7, SE IRR 276 X 83' OF 7
1150545	NCB 7675	(MISSION BRANCH LIBRARY SUBD), LOT 39
398374	NCB 7675 BLK	LOT PT OF 20, 21, 21F, 22B, 23B & 24B
398463	NCB 7676 BLK	LOT N IRR 36.26 FT OF B1
397976	NCB 7659 BLK	LOT A
1206589	NCB 7664	IRR SW 67.6 FT OF SAN JOSE PLAZA MISSION LANDS
398026	NCB 7664 BLK 1	LOT 1 MISSION SAN JOSE ARCHDIOCESE OF SA SUBD
398036	NCB 7664 BLK 1	LOT E 171.1 FT OF N 45.34 FT OF H
398035	NCB 7664 BLK 1	LOT W 173 & S 15 OF E 174.5 OF H
398017	NCB 7664 BLK	LOT LOT PT OF 58 OR ARB I (SAN JOSE MISSION)
398027	NCB 7664 BLK 1	LOT E PT OF C
398029	NCB 7664 BLK 1	LOT D
398031	NCB 7664 BLK 1	LOT W 60 FT OF S 1/2 OF E
398037	NCB 7664 BLK	LOT A-1 & W TRI 45.8 FT OF B-1
398032	NCB 7664 BLK 1	LOT E 132.7 FT OF W 192.7 FT OF S 1/2 OF E
398018	NCB 7664 BLK	LOT E PT OF J
398033	NCB 7664 BLK 1	LOT W 50 FT OF E 108 FT OF S 1/2 OF E HS
398030	NCB 7664 BLK 1	LOT N 1/2 E
398034	NCB 7664 BLK 1	LOT E 58 FT OF S 1/2 OF E
1206588	NCB 7664	IRR SE 397.47 FT OF SAN JOSE PLAZA MISSION LANDS & W PT OF J & W PT OF C
398038	NCB 7664 BLK 1	LOT E IRRG 68 FT OF B-1
398039	NCB 7664 BLK 1	LOT C1
398023	NCB 7664 BLK	LOT 50 THRU 54 & P-100 (PT OF ST CLOSURES) & NCB 7676 BLK LOT 27 & N IRR PT OF TR-1
398471	NCB 7676 BLK	LOT 15 & 16
398421	NCB 7676 BLK	LOT TR-1 (AKA TRACT 7 .516 ACRES)
398401	NCB 7675	P-21H, P-20J, 21J, S IRR 75.23 FT OF 20G (AKA TRACT 6 2.701 ACRES)

The following properties are amended by adding the Mission Protection Overlay District 3, "MPOD-3":

Property ID	Legal Description
476173	NCB 11173 BLK LOT E IRRG 235 FT OF TR-60

476170	NCB 11173	BLK	LOT PT OF 59 OR W IRRG 1352.28 FT OF TR-L
476171	NCB 11173	BLK	LOT PT OF 59 OR E IRR 134 FT OF TR K & TR-L
476169	NCB 11173	BLK	LOT PT OF 59 OR W IRRG 1352.28 FT OF K
476168	NCB 11173	BLK	LOT PT OF 59 OR E 90 FT OF TR-J
476167	NCB 11173	BLK	LOT PT OF 59 OR W 1284.45FT OF TR-J
476166	NCB 11173	BLK	LOT PT OF 59 OR E IRRG 97.5 FT OF TR-I
469569	NCB 10933	BLK	LOT W IRR 182 FT OF TR 27 & 27 1/2
476165	NCB 11173	BLK	LOT PT OF 59 OR W IRRG 1269.1 FT OF TR-I
469571	NCB 10933	BLK	LOT E IRR 1629 FT OF TR 28
469562	NCB 10933	BLK	LOT W IRR 282 FT OF TR-4 & W IRR 294FT OF TR-26 2.28AC
469563	NCB 10933	BLK	LOT TR 4 AKA LOT 4 & TR 26 "LIFE ESTATE ON IMPVMT & 3 AC"
469568	NCB 10933	BLK	LOT E IRRG 1629 FT OF TR-27 1/2
469567	NCB 10933	BLK	LOT E IRR 1676.53 FT OF TR 27 10.790AC
476120	NCB 11173	BLK	LOT E IRRG 97.5 FT OF TR 58
469557	NCB 10933	BLK	LOT PT OF TR 2
476163	NCB 11173	BLK	LOT TR 56A
476164	NCB 11173	BLK	LOT TR 57 & NCB 11174 N 20 FT OF E
476222	NCB 11174		W IRR 903.89 FT OF E PT OF TR 1A & S PT OF TR 14
476221	NCB 11174		ARB TR 14A & E IRR TR 1A
476233	NCB 11174	BLK	LOT E IRRG 308.1 FT OF TR 13
476232	NCB 11174	BLK	LOT MID 446.07 FT OF TR-13
476231	NCB 11174	BLK	LOT W 210 FT OF E 964.17 FT OF TR-13
469605	NCB 10933	BLK	LOT TR 66
476239	NCB 11174	BLK	LOT TR 15A
476237	NCB 11174	BLK	LOT S IRR 83.78 OF W 190.58 OF TR 15
469250	NCB 10920	BLK	LOT SE IRR 229.05 FT OF 2
469555	NCB 10933	BLK	LOT TR 65, TR 67, & TR 68 NON ADJACENT PROPE
469348	NCB 10922	BLK 2	LOT S 63 FT OF 5B
469604	NCB 10933	BLK	LOT TR 64A
476236	NCB 11174	BLK	LOT N IRR 90.63FT OF W 110.07FT OF TR 15
476238	NCB 11174	BLK	LOT PT OF TR-15
476240	NCB 11174	BLK	LOT TR 15B
469546	NCB 10932	BLK	LOT P-72C
469603	NCB 10933	BLK	LOT TR 64
469230	NCB 10919	BLK	LOT TR 5 B EXC N IRR 143.5 FT 1.74 AC
469547	NCB 10932		P-72 & P-72A
469352	NCB 10922	BLK 3	LOT S 49.9 FT OF 1 & 2
469245	NCB 10919	BLK	LOT 23 0.6743 AC
469229	NCB 10919	BLK	LOT CEMETERY AT BERGS MILL P-108
469545	NCB 10932		P-72B
469542	NCB 10932	BLK	LOT IRR SE 115.66 FT OF 69 & LOTS 70 & 71
469354	NCB 10922	BLK 3	LOT S IRR 51.6 FT OF 4
469251	NCB 10920	BLK	LOT P-1 & P-2

1102639	NCB 10920	BLK	LOT NW IRR 121.65 FT OF 2
469252	NCB 10920	BLK	LOT P-3 1.801AC
469254	NCB 10920		P-4
476217	NCB 11174	BLK	LOT TR 3 OR E IRR 113 FT OF TR 14
469349	NCB 10922	BLK 2	LOT NE IRRG 228.4 FT OF 5B
476216	NCB 11174	BLK	LOT TR 2 OUT OF TR 14
469228	NCB 10919	BLK	LOT P-107 0.69AC
476214	NCB 11174	BLK	LOT E 101.43 FT OF TR-1 OUT OF TR-14
476215	NCB 11174	BLK	LOT W TRI 30.69 FT OF TR-1 OUT OF TR-14 HS
476241	NCB 11174	BLK 4	LOT 16 SA RIVER AUTH MAINT FACILITY
476235	NCB 11174	BLK	LOT W IRR 302 OF E IRR 705.10 OF TR 14
469363	NCB 10922	BLK 3	LOT 7 JO DEE MOODY SUBD
469358	NCB 10922	BLK 3	LOT S IRR 66.8 FT OF 5
476268	NCB 11175	BLK	LOT SW TRI 24.87 FT OF TR 14
476270	NCB 11175	BLK	LOT SE 8 FT X 9 FT OF TR-14 NON-ADJACENT
469364	NCB 10922	BLK 3	LOT 8 JO DEE MOODY SUBD
469365	NCB 10922	BLK 3	LOT 9 JO DEE MOODY SUBD
469359	NCB 10922	BLK 3	LOT S IRRG 103.9 FT OF W IRRG 99.9 FT OF 5
469360	NCB 10922	BLK 3	LOT N IRR 42.91 OF E 207.9 FT OF 4 & S IRR 54.69 213.5 FT OF 5
469357	NCB 10922	BLK 3	LOT W IRRG 51.2 FT OF N 104 FT OF 5
469389	NCB 10923	BLK 4	LOT WEST 32.08 FT OF E 175.98 FT OF S IRR 97.4 OF 1A 0.07 AC
469412	NCB 10924	BLK	LOT 6
469411	NCB 10924	BLK	LOT 5
469388	NCB 10923	BLK 4	LOT 1A2 & 1A3
469387	NCB 10923	BLK 4	LOT NE IRR 200 FT OF 1A
476276	NCB 11175	BLK 1	LOT 2 ARMAS DE CORTEZ SUBD
469390	NCB 10923	BLK 4	LOT 2A
1158975	NCB 10932	BLK	LOT P-111 & SW TR 74.34 FT OF 69
469391	NCB 10923	BLK 4	LOT S 38.87 FT OF 3A
469392	NCB 10923	BLK 4	LOT N 58.17 FT OF 3A
469444	NCB 10924	BLK 9	LOT S 55.56 FT OF W 149.06 FT OF 4
469393	NCB 10923	BLK 4	LOT S 74.79 FT OF 4A
469395	NCB 10923	BLK 4	LOT N 19.42 FT OF 4A & S 39.59 FT OF 5A
469446	NCB 10924	BLK 9	LOT W 149.06 OF N 40.28 OF 4 & S 15.28 OF W 149.06 OF 5
469445	NCB 10924	BLK 9	LOT E 149.06 OF W 298.12 OF 4 & S 15.28 FT OF E 149.06 OF W 298.12 OF 5
469394	NCB 10923	BLK 4	LOT N 59.01 FT OF 5A
469396	NCB 10923	BLK 4	LOT 40 FT ALLEY
476266	NCB 11175	BLK	LOT W PT OF 34A, E PT OF TR-14
476269	NCB 11175	BLK	LOT E IRRG 37.5FT OF TR 34A NON-ADJACENT
469397	NCB 10923	BLK 5	LOT 1B
469533	NCB 10932	BLK	LOT P-11
469398	NCB 10923	BLK 5	LOT 2B

469380	NCB 10923	BLK	LOT PT OF TR 32 ARB P-10
469530	NCB 10932	BLK	LOT P-8 & P-12
469532	NCB 10932	BLK	LOT P-9 12.256AC
476121	NCB 11173	BLK	LOT W IRR 1269.1 FT OF TR 58 (12.63) &
469210	NCB 10918		P-1 & NCB: 10919 P-104, 105 & 106
469255	NCB 10920	BLK	LOT P 4A 1.891 AC
1170596	NCB 10918		(JESSE CANTU SUBD), BLOCK 1 LOT 1
469212	NCB 10918	BLK	LOT P-108 11.504 AC
469561	NCB 10933	BLK	LOT TR 4 AKA LOT 4 & TR 26
469556	NCB 10933	BLK	LOT 1A THRU 7A NON ADJACENT PROPERTY
1181897	NCB 11173	P-100	
469564	NCB 10933	BLK	LOT S IRRG 60.8 FT OF E IRR 140.3 FT OF TR 25B
469565	NCB 10933	BLK	LOT PT OF TR 25B
469551	NCB 10933	BLK	LOT NE IRR 543 FT OF 1 4.33 AC
469558	NCB 10933	BLK	LOT PT OF TR 2
469554	NCB 10933	BLK	LOT SE 125 FT OF TR 1
469407	NCB 10924	BLK	LOT 2
469443	NCB 10924	BLK 9	LOT 2 & 3
469450	NCB 10924	BLK 9	LOT S 41.6 FT OF N 83.33 FT OF 5
469451	NCB 10924	BLK 9	LOT N 41.55 FT OF 5
469449	NCB 10924	BLK 9	LOT E 149.06 FT OF 4 & S 15.28 FT OF E 149.06 FT
469409	NCB 10924	BLK	LOT 3 & 4
469442	NCB 10924	BLK 9	LOT 1
476160	NCB 11173		NW IRR PT OF TR 56 & TR 56 1/2
476162	NCB 11173	BLK	LOT TR 56, ARB TR 56B
476161	NCB 11173		SE IRR PT OF TR 56 & TR 56 1/2
469406	NCB 10924	BLK	LOT 1
476265	NCB 11175		TR-13A,13B,14A & TR-33 R. O. W.
1181896	NCB 11175		P-100
469223	NCB 10918	BLK	LOT P-6, P-6B & 110 NCB 10919 BLK
	LOT 111A & 111B		
1054456	NCB 10879		P-111

The following properties are amended by adding the Mission Protection Overlay District 4, "MPOD-4":

Property ID	Legal Description	
155740	CB 4002-1	P-10 2.459 AC C
155748	CB 4002-1	P-10H 2.488 AC
155784	CB 4002-1	P-20C
155741	CB 4002-1	P-10A
155794	CB 4002-1	LOT TR-4B ARB P-21C
1156867	CB 4002-1	P-20E (1.75 AC)
188993	CB 4283B	P-18 ABS 769

155739	CB 4002-1	P-9
155818	CB 4002-1	P-27 (FORMERLY P-21D)
1048533	CB 4002-1	P-30B
155738	CB 4002-1	P-8A
1048534	CB 4002-1	P-30C
155819	CB 4002-1	P-27A
188991	CB 4283B	P-16 ABS 769
155737	CB 4002-1	P-8
1048535	CB 4002-1	P-30D
155796	CB 4002-1	E IRRG 271 FT OF TR-5 ARB P-22A
155789	CB 4002-1	TR-4C P21E
155786	CB 4002-1	W IRRG 57 FT OF TR-43 ARB P-21 HS
188990	CB 4283B	P-15 ABS 769
155791	CB 4002-1	BLK LOT E IRRG 285.75 FT OF TR-43 ARB P-21F
1156866	CB 4002-1	P-20D (3.37 AC) & P-20B (1.27 AC) NON-ADJ REMAINS
155729	CB 4002-1	P-4
155778	CB 4002-1	E IRRG 12.5 FT OF TR-2 &3 ARB P-19A & 20A
188989	CB 4283B	TR 6 ARB P-14E ABS 769
188987	CB 4283B	TR 4 ARB P-14C ABS 769
188988	CB 4283B	TR 5 ARB P-14D ABS 769
155730	CB 4002-1	P-4A
155736	CB 4002-1	P-7 (8.52AC) & P-7A (.73AC)
155726	CB 4002-1	P-2A
188983	CB 4283B	P-13 ABS 769
155727	CB 4002-1	P-2B
155725	CB 4002-1	P-2
471967	NCB 11041	BLK LOT S IRR 179.56 FT OF 16B
469599	NCB 10933	BLK LOT W IRR 338 FT OF S 213 FT OF 35 1.05AC
155723	CB 4002-1	P-1
471962	NCB 11041	BLK LOT 15B EXC NW IRR 27.84 FT OF 15B
471963	NCB 11041	BLK LOT NW IRR 27.84 FT OF 15B ("ESPADA RD" ROW)
471969	NCB 11041	BLK LOT S 164.23 OF N 194.73 OF 16B
471970	NCB 11041	BLK LOT 16C ESPADA RD R.O.W.
188982	CB 4283B	P-12 ABS 769
471974	NCB 11041	BLK LOT 17D (PROPOSED ESPADA RD R.O.W.)
188981	CB 4283B	P-11 ABS 769
471977	NCB 11041	BLK LOT 17B, EXC ARB 17C & 17D
471976	NCB 11041	BLK LOT 17C (PROSPOSED ESPADA RD R.O.W.)
471978	NCB 11041	BLK LOT 18B EXC N 29.95 FT
1129910	NCB 11041	BLK LOT N 29.95 FT OF 18B
1143686	NCB 10933	BLK LOT NW IRR 7.76 FT OF TR-35 (0.062 AC) & P-100A FORMERLY RIVERBED ADJ P-35 (0.22 AC)
471986	NCB 11041	BLK LOT S IRR 309 FT OF 19B ARB 19C
188978	CB 4283B	P-10 (.32AC) & P-10E (.04AC) A-769
471987	NCB 11041	BLK LOT N IRR 30 FT OF 19C
188979	CB 4283B	P-10A(.21AC) & P-10D (.15AC) A-769

471982 NCB 11041 BLK LOT SE IRRG 214.38 FT OF 19B
188980 CB 4283B P-10B(.24AC) & P-10C (.12AC) A-769
471983 NCB 11041 BLK LOT NE IRR 22.62 FT OF TR 19B
(PROPOSED ESPADA RD R.O.W.)
471984 NCB 11041 BLK LOT SW IRR 80.78 FT OF 19B ARB 19A, EXC NW 23 FT
471940 NCB 11041 BLK LOT S IRR 134.6 FT OF LOTS 1B & 2B
471985 NCB 11041 BLK LOT NW IRRG 23 FT OF 19B ESPADA RD R.O.W.
471943 NCB 11041 BLK LOT S HLF OF 3B
471941 NCB 11041 BLK LOT N IRR 81.10 FT OF LOTS 1B & 2B
471923 NCB 11040 TR-10 (.173AC) & CB 4283B P-10K (.133AC)
ABS 769
471922 NCB 11040 TR-10A(.152) TR10D (.053) TR 10E (.013) CB 4283B
P-10H(.007), P-10I (.075), P-10J
471921 NCB 11040 TR-10B(.169) TR10C (.10) & CB 4283B P-10F
(.015), P-10G (.022) ABS 769
471988 NCB 11041 BLK LOT SE IRR 80.55 FT OF 20B
471938 NCB 11040 BLK 1 LOT 12 LA ESPADA SUBD
469594 NCB 10933 BLK LOT NW IRR 117.08 FT OF TR-34A
471989 NCB 11041 BLK LOT NW IRR 80.55 FT OF 20B
471942 NCB 11041 BLK LOT N HLF OF 3B
471937 NCB 11040 BLK 1 LOT 11 LA ESPADA SUBD
471944 NCB 11041 BLK LOT 4B
471991 NCB 11041 BLK LOT SE IRRG 146.1 FT OF 21B
1158995 NCB 10933 BLK LOT NE IRR 230.53 FT OF TR-34A
471936 NCB 11040 BLK 1 LOT 10 LA ESPADA SUBD
471947 NCB 11041 BLK LOT S IRR 267.2 FT OF 6B
471935 NCB 11040 BLK 1 LOT 9 LA ESPADA SUBD
471990 NCB 11041 BLK LOT N 15 FT OF 21,S 61.95 OF 22 &
S 76.95 OF N 230 OF 6B
471934 NCB 11040 BLK 1 LOT 8 LA ESPADA SUBD
469589 NCB 10933 BLK LOT SE IRR 262.63 OF E IRR 341.00 OF 34
& .21 AC FORMERLY RIVERBED
471933 NCB 11040 BLK 1 LOT 7 LA ESPADA SUBD
471952 NCB 11041 BLK LOT SE 144 4 FT OF 10B
471932 NCB 11040 BLK 1 LOT 6 LA ESPADA SUBD
471931 NCB 11040 BLK 1 LOT 5 LA ESPADA SUBD
471930 NCB 11040 BLK 1 LOT 4 LA ESPADA SUBD
471929 NCB 11040 BLK 1 LOT 3 LA ESPADA SUBD
471996 NCB 11041 BLK LOT S W IRR 85 FT OF 24B
471928 NCB 11040 BLK 1 LOT 2 LA ESPADA SUBD
471949 NCB 11081 BLK LOT 8B
471927 NCB 11040 BLK 1 LOT 1 LA ESPADA SUBD
471950 NCB 11041 BLK LOT 9B
471951 NCB 11041 BLK LOT NW IRR 196 1FT OF 10B
471904 NCB 11040 ARB TR 3 2.075 AC & CB 4283B
P-1 (.960 AC) ABS 769

471948 NCB 11041 BLK LOT 7B
471995 NCB 11041 BLK LOT N E IRR 150 FT OF 24B
471993 NCB 11041 BLK LOT 23B
471992 NCB 11041 BLK LOT N 76.95 OF 22B & N 154 FT OF 6B
475946 NCB 11168 BLK 2 LOT 1 D HERNANDEZ SUBD
469584 NCB 10933 BLK LOT NW IRR 232.5 FT OF TR-32
476190 NCB 11173 TR-5 & N IRRG 61.2 FT OF F4
1159011 NCB 11173 BLK LOT NE IRR 215.25 FT OF NW IRR PT OF TR 73 NON ADJACENT PROP
476194 NCB 11173 BLK LOT NW IRR 623.80 FT PT OF TR 73 NON ADJACENT PROP
469586 NCB 10933 BLK LOT NE IRR 729 FT OF 32 & NE TRI 75 FT OF 33
476196 NCB 11173 BLK LOT NE IRR PT OF TR 73 NON ADJACENT PROP
469579 NCB 10933 BLK LOT W IRRG 306.97 FT OF TR-31
469578 NCB 10933 BLK LOT E IRRG 748 FT OF TR-31
469596 NCB 10933 BLK LOT E 467.47 FT OF N 516.84 FT OF TR 35 (5.312 AC) & P-100 (FORMERLY RIVERBED ADJ N W CORNER TR 35 (0.11 AC)
471955 NCB 11041 BLK LOT 12B
471946 NCB 11041 BLK LOT SW 10 FT & NE IRR 83 FT OF SE IRR 106 FT OF 5B
471945 NCB 11041 BLK LOT NE IRR 142.8 FT OF NW IRR 108 FT OF 5B
471954 NCB 11041 BLK LOT W 50 FT OF 11B
469590 NCB 10933 BLK LOT NE 159 FT OF NW 200 FT OF TR 34
476197 NCB 11173 BLK LOT SE IRR PT OF TR 73 NON ADJACENT PROP
469587 NCB 10933 BLK LOT SE IRR 1086.7 FT OF 33
1158990 NCB 10933 BLK LOT E IRR 73.05 FT OF TR-34B
469595 NCB 10933 BLK LOT MID IRR 443.84 FT OF TR-34B
469585 NCB 10933 BLK LOT SW IRR 350 FT OF TR-32 (.5693) & SW IRR 97.58 FT OF TR-33 (4.3907)
476202 NCB 1173 TR - 77 1/2
155732 CB 4002-1 P-6
1159000 NCB 11173 BLK LOT SE 96.12 FT OF SW IRR PT OF TR 73 NON ADJACENT PROP
1158989 NCB 10933 BLK LOT NW IRR 217.74 FT OF TR-34B & MID IRR 217.74 FT OF TR-33
476195 NCB 11173 BLK LOT SW IRR PT OF TR 73 EXCEPT SE IRR 96.12 FT NON ADJACENT PROP
471959 NCB 11041 BLK LOT SW 164.44 FT OF 13B
471958 NCB 11041 BLK LOT NE IRR 174.4 FT OF 13B
471953 NCB 11041 BLK LOT E 86 FT OF 11B
476158 NCB 11173 BLK LOT S IRRG 451.22 FT OF G4
471960 NCB 11041 BLK LOT 14B
155780 CB 4002-1 LOT PT OF TR-2 ARB P-19 (NON-ADJACENT) LABEL#TEX0491665/TEX0491666
476138 NCB 11173 LOT PT OF TR-2 ARB P-19B (.36 AC) CB 4002 PT TR-2 ARB P-19B

155776	CB 4002-1	LOT E IRR 48 FT OF TR-1 ARB P-18A (NON-ADJACENT)
476137	NCB 11173	LOT NE PT OF TR-1 & TR-2 ARB P-18C
155751	CB 4002-1	P-11B
155753	CB 4002-1	P-11D
1145729	NCB 11173	P-11E (1.95) & CB 4002-1 P-11E (0.16)
476132	NCB 11173	LOT PT OF TR-1 ARB P-18B CB 4002-1 PT OF TR-1ARB P18B
476123	NCB 11173	P-11C (.131AC) CB 4002-1 P-11A (2.329AC)
155769	CB 4002-1	LOT PT OF TR-1 ARB P-18C (1.076 AC), ARB 18D (1.076 AC), & ARB 18E (1.076 AC)
155772	CB 4002-1	LOT PT OF TR-1 ARB P-18F
155752	CB 4002-1	P-11
155773	CB 4002-1	LOT PT OF TR-1 ARB P-18G
1223695	CB 4002-1	P-11F
155774	CB 4002-1	LOT PT OF TR-1 ARB P-18H LABEL#PFS0432550/PFS0432551
469601	NCB 10933	BLK LOT W IRRG 338 FT OF 36
469600	NCB 10933	BLK LOT E IRR 410.84 FT OF TR 36

SECTION 2. All other provisions of Chapter 35 except those expressly amended by this ordinance shall remain in full force and effect including the penalties for violations as made and provided for in Section 35 -491.

SECTION 3. The Director of Development Services shall change the zoning records and maps in accordance with this ordinance and the same shall be available and open to the public for inspection.

SECTION 4. This ordinance shall become effective June 28, 2015

PASSED AND APPROVED this 18th day of June 2015.

M A Y O R
Ivy R. Taylor

ATTEST:

Leticia M. Vacek, City Clerk

APPROVED AS TO FORM:

For Martha G. Sepeda, Acting City Attorney

Agenda Item:	**Z-5 (in consent vote: 72, 73, 74, Z2, Z5, Z6, Z7, P1, Z11, P2, Z12, Z13, Z14, Z17, P3, Z18, P4, Z19, Z20)**
Date:	06/18/2015
Time:	02:50:29 PM
Vote Type:	Motion to Approve
Description:	ZONING CASE # Z2015064 (Council District 3): An Ordinance amending the Zoning District Boundary of approximately 649 acres by applying one of the four Mission Protection Overlay zoning districts known as MPOD-1, MPOD-2, MPOD-3, and MPOD-4. The base zoning and overlay zoning districts to the property will remain unchanged. The area surrounding Mission Concepcion generally bound on the north by IH-10 E Access Road, on the east by Roosevelt Avenue, on the south by East Southcross Boulevard, and on the west by Probandt Street shall be rezoned by adding The Mission Protection Overlay District 1 "MPOD-1". The area surrounding Mission San Jose generally bound by on the north by East Southcross Boulevard, on the east by Padre Drive and Mission Parkway, on the south by SE Military Drive, and on the west by Quintard Street shall be rezoned by adding The Mission Protection Overlay District 2 "MPOD-2". The area surrounding Mission San Juan de Capistrano generally bound on the north by SE Military Drive, on the east by Old Corpus Christi Road, on the south by SE Loop 410/U.S. Highway 281, and on the west by Roosevelt Avenue shall be rezoned by adding The Mission Protection Overlay District 3 "MPOD-3".The area surrounding Mission Espada generally bound on the north by the west-bound SE Loop 410 Access Road, on the east by Villamain, on the south by Espada Road, on the west by Roosevelt Avenue shall be rezoned by adding The Mission Protection Overlay District 4 "MPOD-4". Staff and Zoning Commission recommend Approval.
Result:	Passed

Voter	Group	Not Present	Yea	Nay	Abstain	Motion	Second
Ivy R. Taylor	Mayor		x				
Roberto C. Trevino	District 1		x			x	
Alan Warrick	District 2		x				
Rebecca Viagran	District 3	x					
Rey Saldaña	District 4		x				
Shirley Gonzales	District 5		x				
Ray Lopez	District 6		x				
Cris Medina	District 7		x				
Ron Nirenberg	District 8		x				x
Joe Krier	District 9	x					
Michael Gallagher	District 10		x				

Z2015064

Attachment A

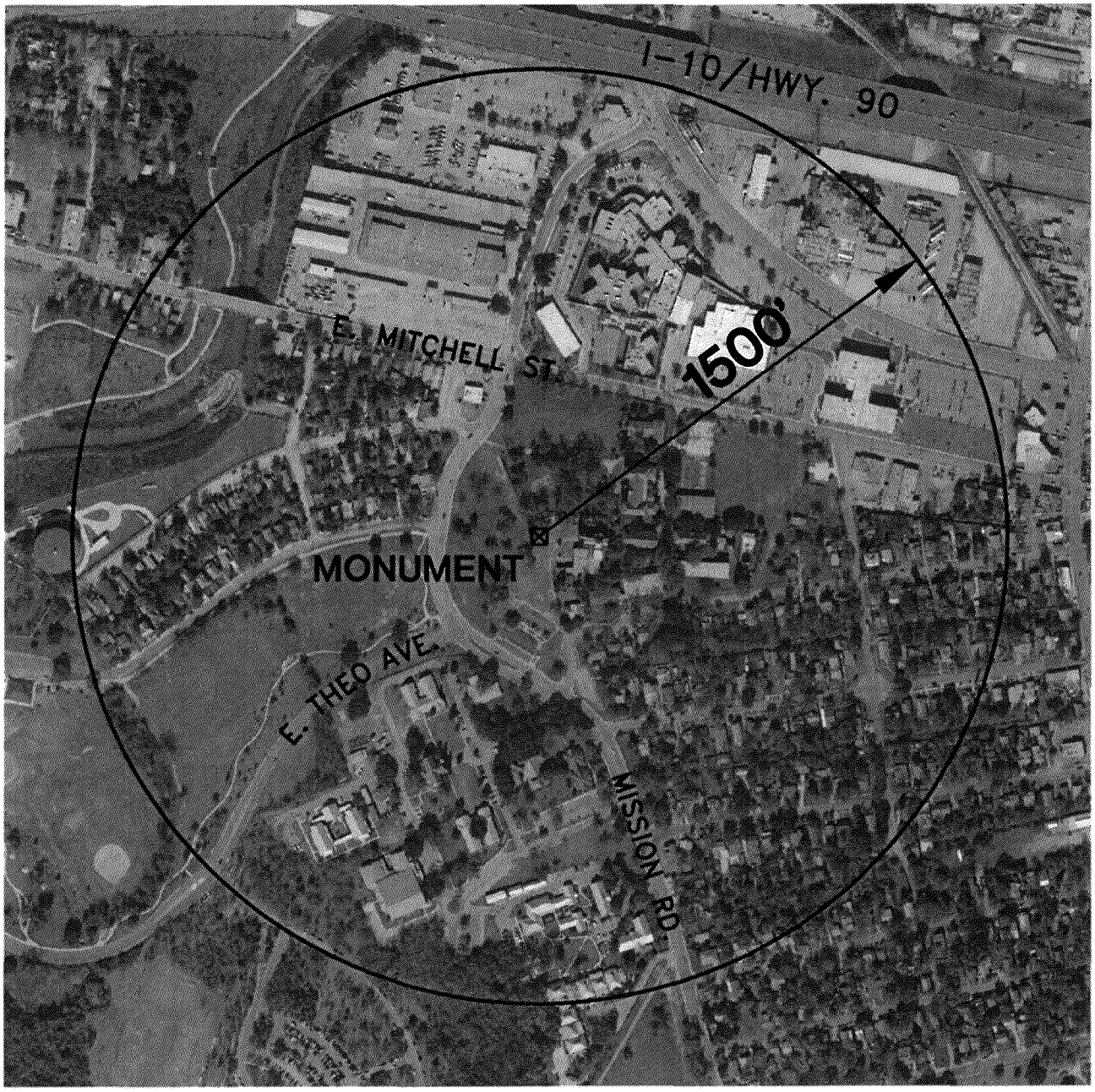

1 inch = 500'

500' 0' 250' 500'

MPOD-1
MISSION CONCEPCION

PAPE-DAWSON ENGINEERS

2000 NW LOOP 410 | SAN ANTONIO TEXAS 78213 | PHONE: 210.375.9000 FAX: 210.375.9010

TEXAS BOARD OF PROFESSIONAL ENGINEERS, FIRM REGISTRATION # 470
TEXAS BOARD OF PROFESSIONAL LAND SURVEYORS, FIRM REGISTRATION # 100288-00

SHEET 1 OF 2

Aug. 4, 2014 JOB No.: 9065-14

Date: Aug 05, 2014, 7:08am User ID: dleyendecker
File: N:\Survey14\14-9000\9065-14\9065-14 MPOD EXHIBITS.dwg

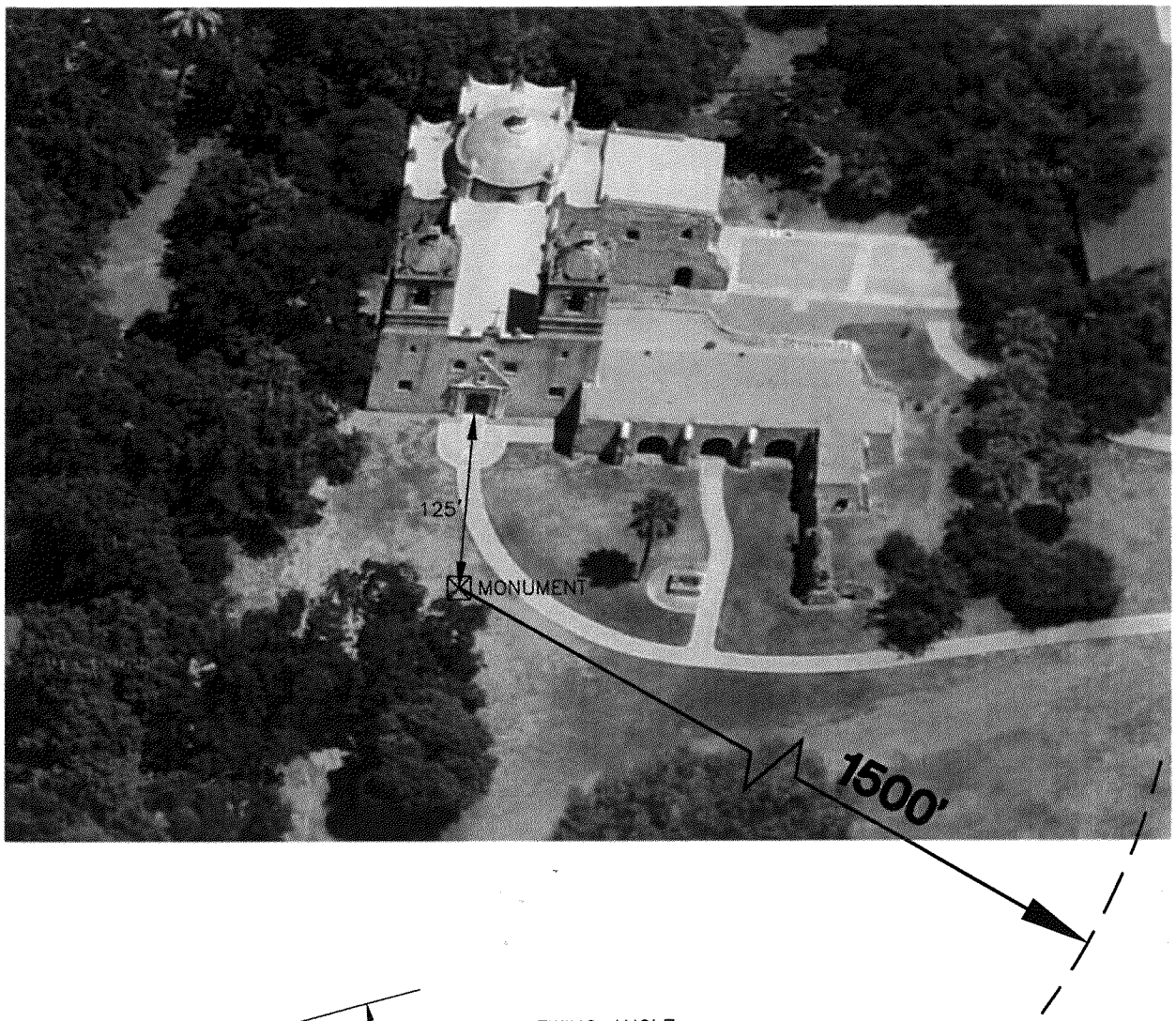

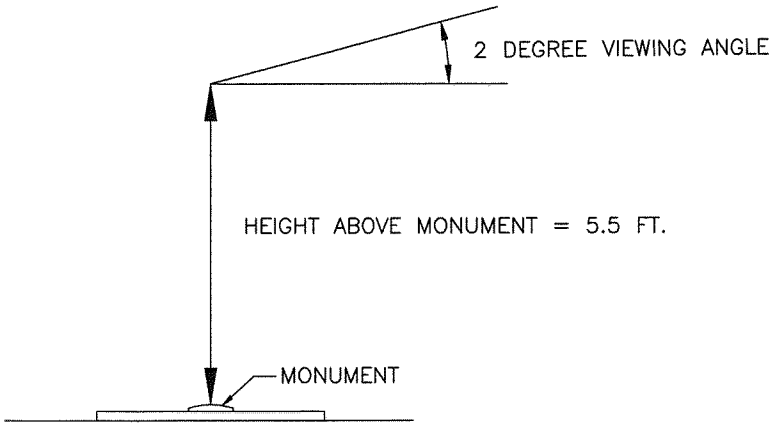

MONUMENT DATA

LAT.: N29° 23' 27.89"
LONG.: W98° 29' 30.08"

N: 13,690,086.31
E: 2,130,359.61
ELEV: 609.65

DATUM

HORIZ. = NAD83, NA2011
VERT. = NAVD88, GEOID 03

MPOD-1
MISSION CONCEPCION

PAPE-DAWSON ENGINEERS

2000 NW LOOP 410 | SAN ANTONIO TEXAS 78213 | PHONE: 210.375.9000 FAX: 210.375.9010

TEXAS BOARD OF PROFESSIONAL ENGINEERS, FIRM REGISTRATION # 470
TEXAS BOARD OF PROFESSIONAL LAND SURVEYORS, FIRM REGISTRATION # 100288-00

Aug. 4, 2014

JOB No.: 9065-14

SHEET 2 OF 2

Date: Aug 05, 2014, 6:39am User ID: dleyendecker
File: N:\Survey14\14-9000\9065-14\9065-14 MPOD EXHIBITS.dwg

Z2015054

Attachment B

1 inch = 500'

500' 0' 250' 500'

MPOD–2
MISSION SAN JOSE

PAPE-DAWSON ENGINEERS

2000 NW LOOP 410 | SAN ANTONIO TEXAS 78213 | PHONE: 210.375.9000 FAX: 210.375.9010

TEXAS BOARD OF PROFESSIONAL ENGINEERS, FIRM REGISTRATION # 470
TEXAS BOARD OF PROFESSIONAL LAND SURVEYORS, FIRM REGISTRATION # 100288-00

Aug. 4, 2014

JOB No.: 9065–14

SHEET 1 OF 2

Date: Aug 05, 2014, 7:16am User ID: dleyendecker
File: N:\Survey14\14-9000\9065-14\9065-14 MPOD EXHIBITS.dwg

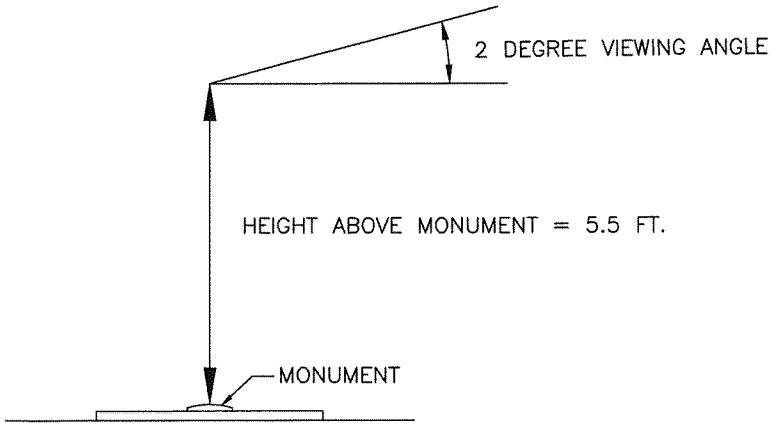

MONUMENT DATA

LAT.: N29° 21' 45.33"
LONG.: W98° 28' 49.13"

N: 13,679,743.97
E: 2,134,027.11
ELEV: 588.77

DATUM

HORIZ. = NAD83, NA2011
VERT. = NAVD88, GEOID 03

MPOD–2
MISSION SAN JOSE

PAPE-DAWSON ENGINEERS

2000 NW LOOP 410 | SAN ANTONIO TEXAS 78213 | PHONE: 210.375.9000 FAX: 210.375.9010

TEXAS BOARD OF PROFESSIONAL ENGINEERS, FIRM REGISTRATION # 470
TEXAS BOARD OF PROFESSIONAL LAND SURVEYORS, FIRM REGISTRATION # 100288-00

Aug. 4, 2014

JOB No.: 9065–14

Date: Aug 05, 2014, 6:42am User ID: dleyendecker
File: N:\Survey14\14-9000\9065-14\9065-14 MPOD EXHIBITS.dwg

Z2015064

Attachment C

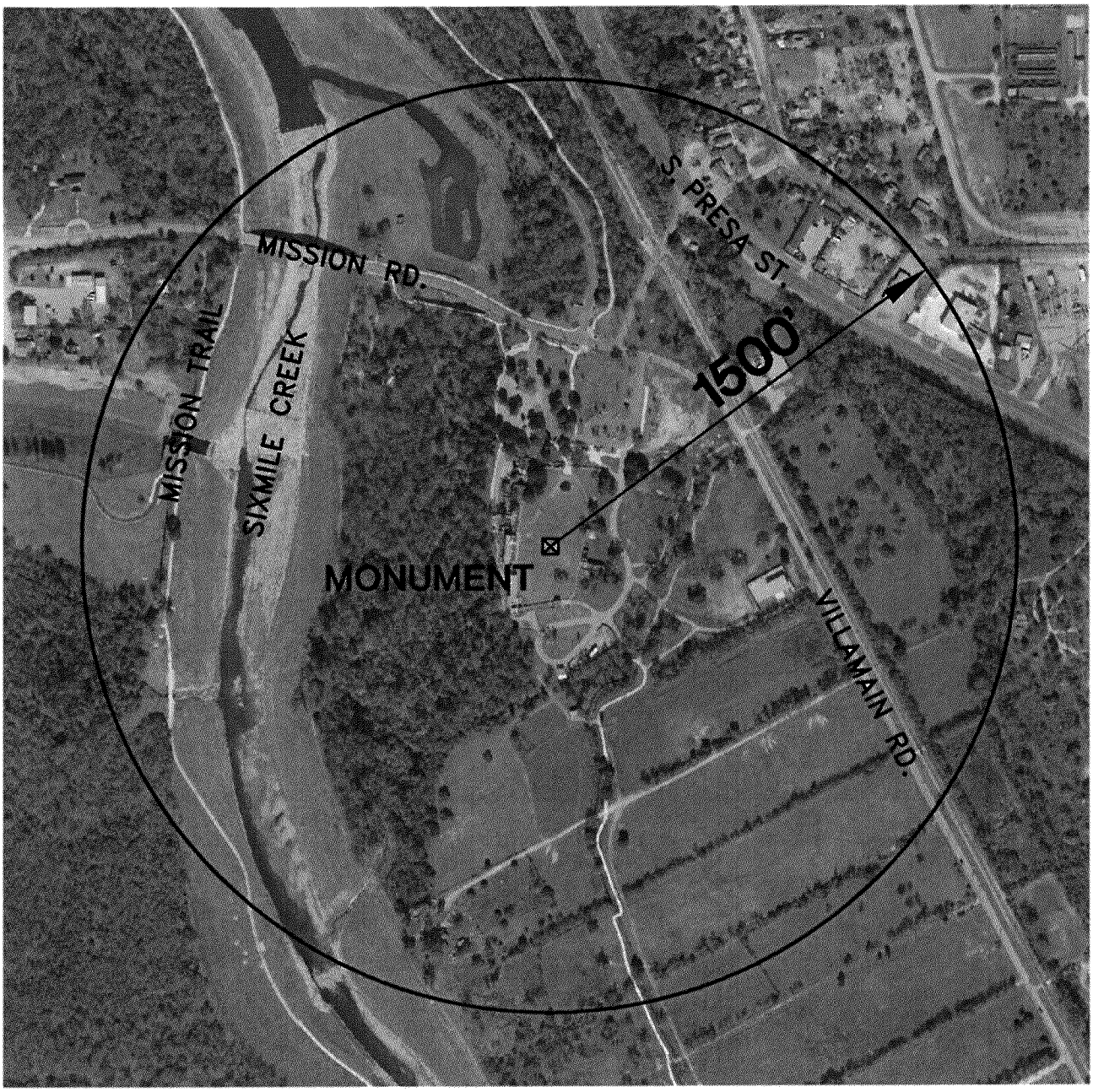

1 inch = 500'

500' 0' 250' 500'

MPOD-3
MISSION SAN JUAN

PAPE-DAWSON ENGINEERS

2000 NW LOOP 410 | SAN ANTONIO TEXAS 78213 | PHONE: 210.375.9000 FAX: 210.375.9010

TEXAS BOARD OF PROFESSIONAL ENGINEERS, FIRM REGISTRATION # 470
TEXAS BOARD OF PROFESSIONAL LAND SURVEYORS, FIRM REGISTRATION # 100288-00

Aug. 4, 2014

JOB No.: 9065-14

SHEET 1 OF 2

Date: Aug 05, 2014, 7:26am User ID: dleyendecker
File: N:\Survey14\14-9000\9065-14\9065-14 MPOD EXHIBITS.dwg

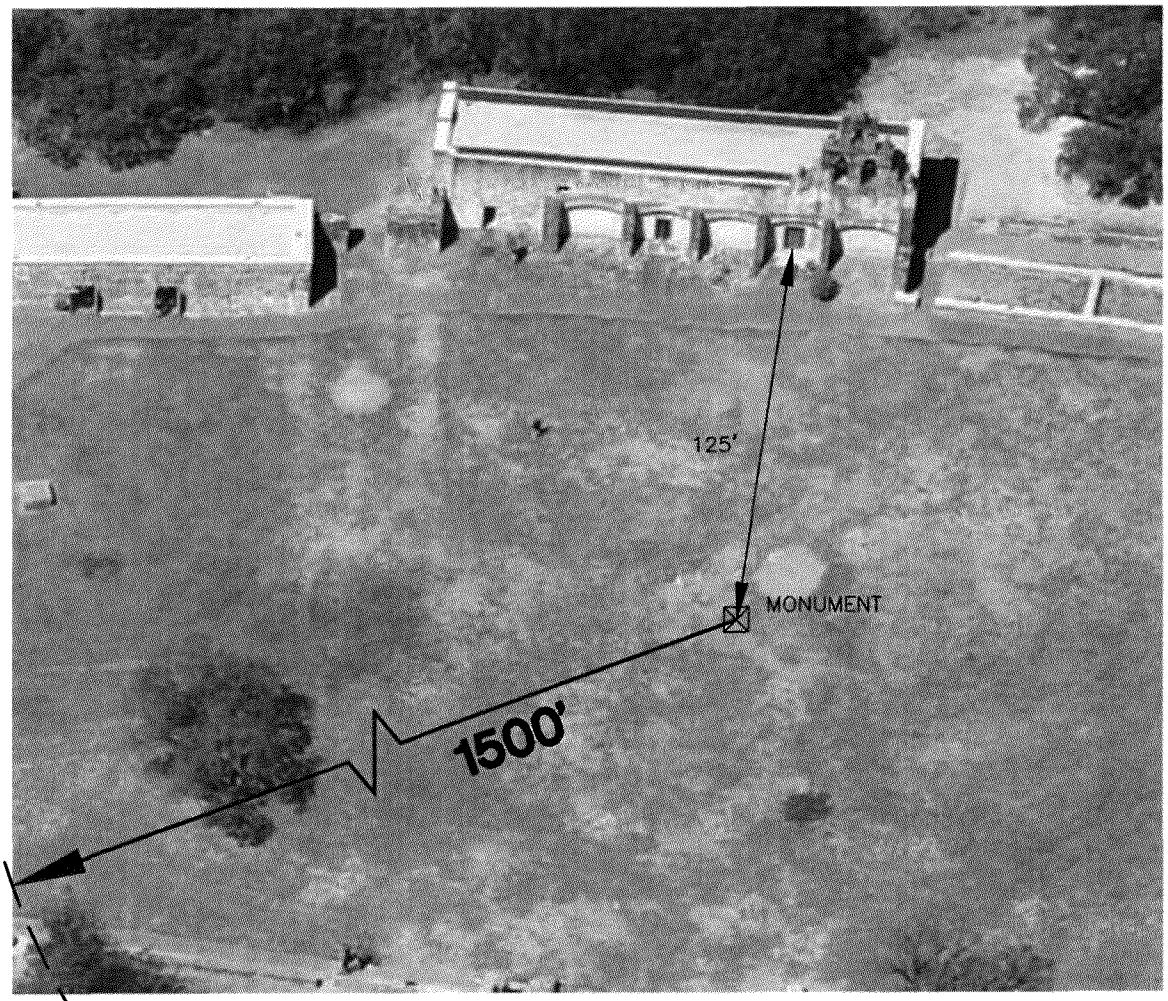

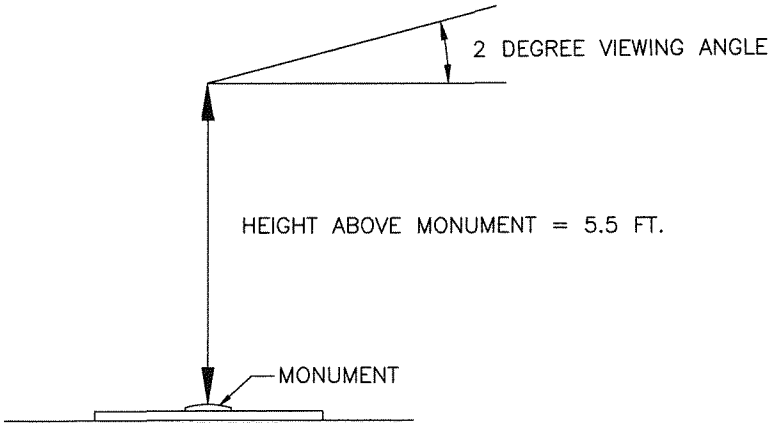

MONUMENT DATA

LAT.: N29° 19' 56.98"
LONG.: W98° 27' 17.99"

N: 13,668,836.89
E: 2,142,142.14
ELEV: 533.14

DATUM

HORIZ. = NAD83, NA2011
VERT. = NAVD88, GEOID 03

MPOD-3
MISSION SAN JUAN

PAPE-DAWSON ENGINEERS

2000 NW LOOP 410 | SAN ANTONIO TEXAS 78213 | PHONE: 210.375.9000 FAX: 210.375.9010

TEXAS BOARD OF PROFESSIONAL ENGINEERS, FIRM REGISTRATION # 470
TEXAS BOARD OF PROFESSIONAL LAND SURVEYORS, FIRM REGISTRATION # 100288-00

Aug. 4, 2014

JOB No.: 9065-14

Date: Aug 05, 2014, 6:43am User ID: dleyendecker
File: N:\Survey14\14-9000\9065-14\9065-14 MPOD EXHIBITS.dwg

Z2015064

Attachment D

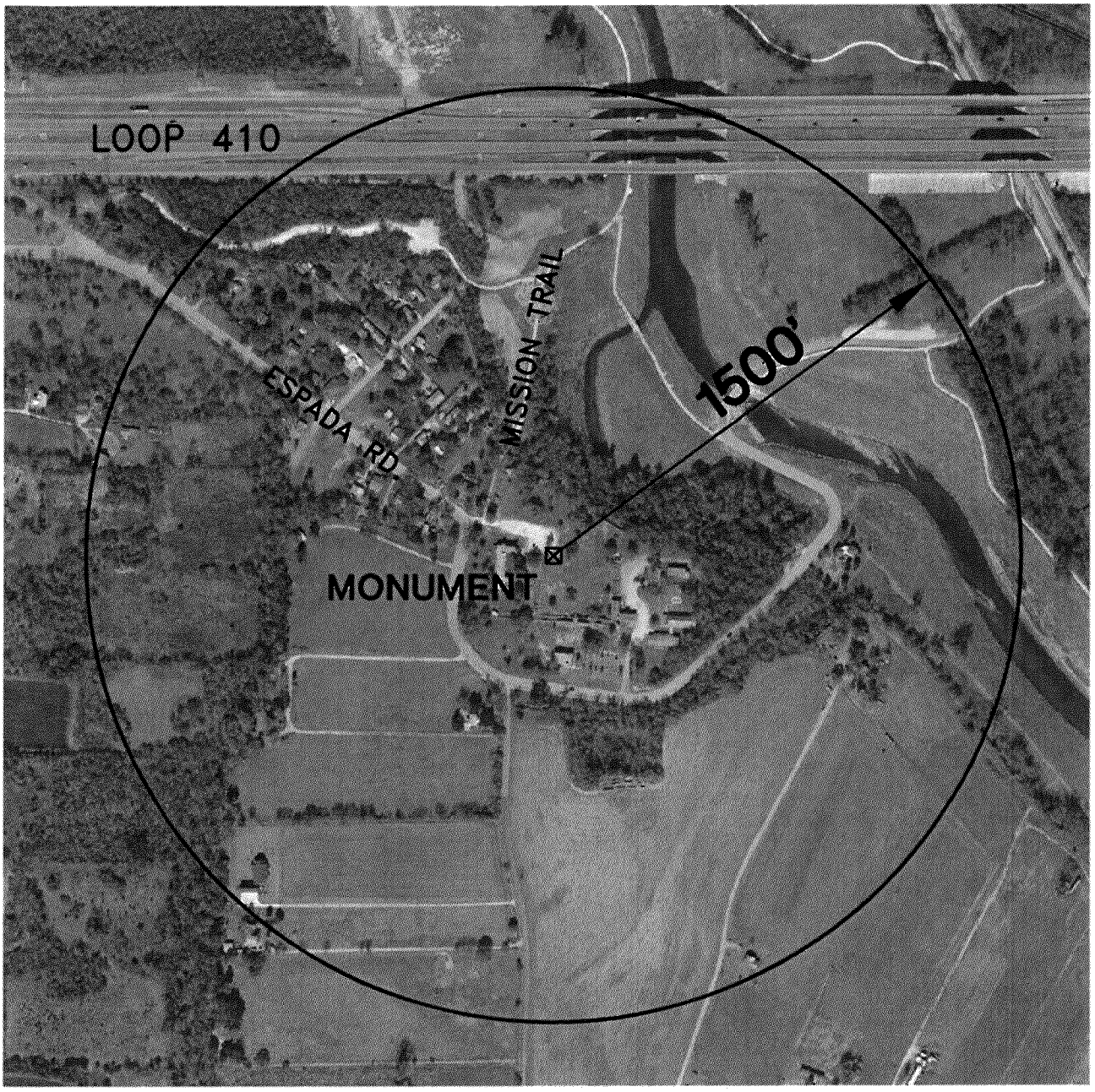

1 inch = 500'

500' 0' 250' 500'

MPOD-4
MISSION ESPADA

PAPE-DAWSON ENGINEERS

2000 NW LOOP 410 | SAN ANTONIO TEXAS 78213 | PHONE: 210.375.9000 FAX: 210.375.9010

TEXAS BOARD OF PROFESSIONAL ENGINEERS, FIRM REGISTRATION # 470
TEXAS BOARD OF PROFESSIONAL LAND SURVEYORS, FIRM REGISTRATION # 100288-00

Aug. 4, 2014

JOB No.: 9065-14

SHEET 1 OF 2

Date: Aug 05, 2014, 7:34am User ID: dleyendecker
File: N:\Survey14\14-9000\9065-14\9065-14 MPOD EXHIBITS.dwg

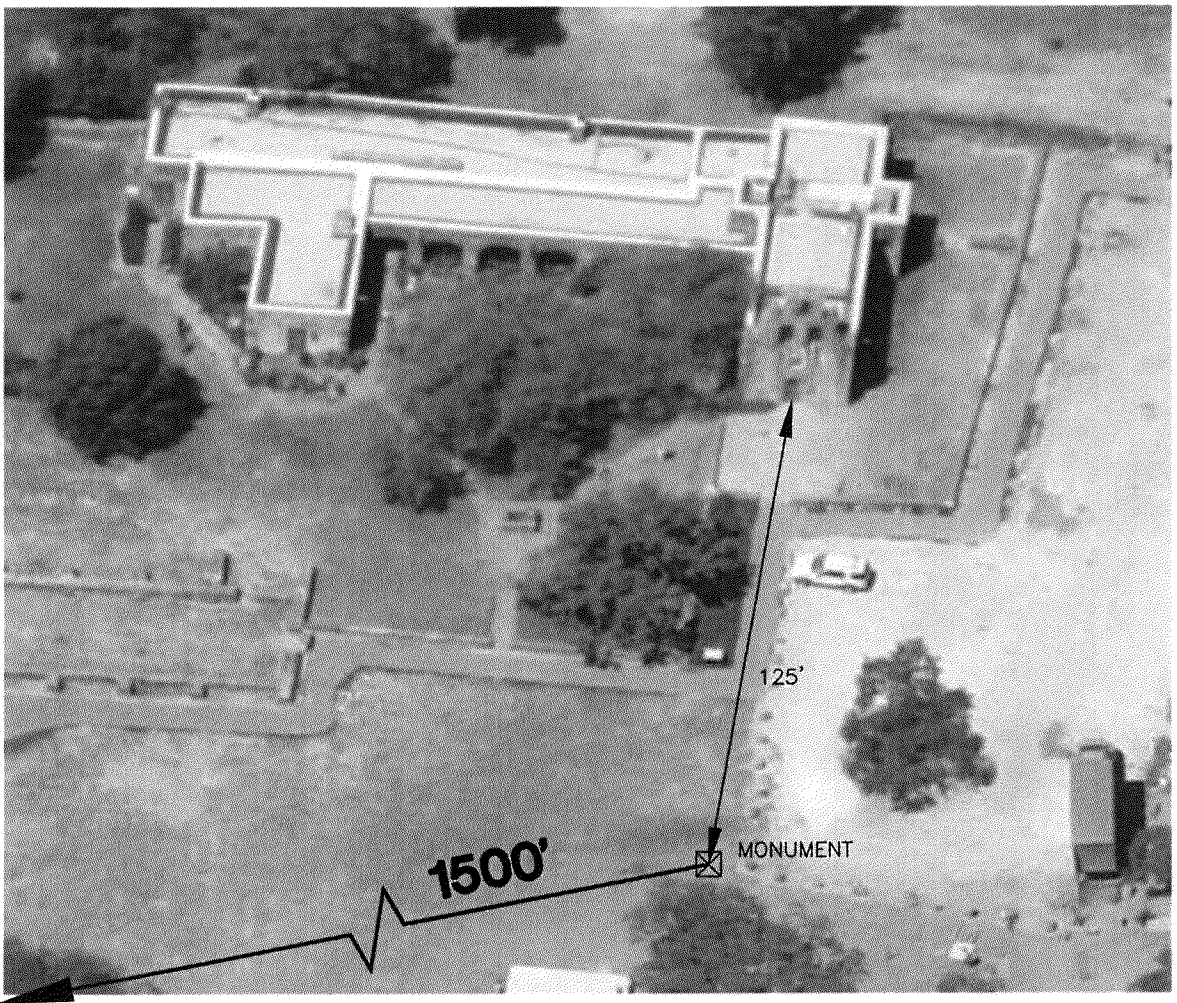

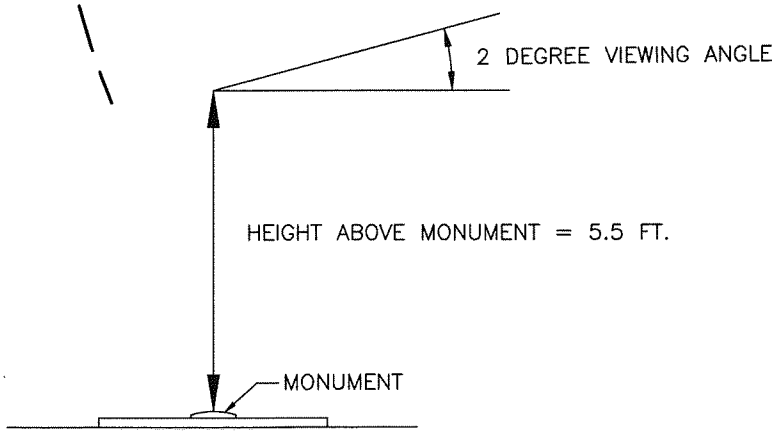

MONUMENT DATA

LAT.: N29° 19' 05.38"
LONG.: W98° 27' 02.48"

N: 13,663,632.32
E: 2,143,538.78
ELEV: 532.75

DATUM

HORIZ. = NAD83, NA2011
VERT. = NAVD88, GEOID 03

MPOD-4
MISSION ESPADA

PAPE-DAWSON ENGINEERS

2000 NW LOOP 410 | SAN ANTONIO TEXAS 78213 | PHONE: 210.375.9000 FAX: 210.375.9010

TEXAS BOARD OF PROFESSIONAL ENGINEERS, FIRM REGISTRATION # 470
TEXAS BOARD OF PROFESSIONAL LAND SURVEYORS, FIRM REGISTRATION # 100288-00

Aug. 4, 2014

JOB No.: 9065-14

Date: Aug 05, 2014, 6:44am User ID: dfeyendecker
File: N:\Survey14\14-9000\9065-14\9065-14 MPOD EXHIBITS.dwg