SAN ANTONIO RIVERBOATS DRAWING SET APPENDIX G

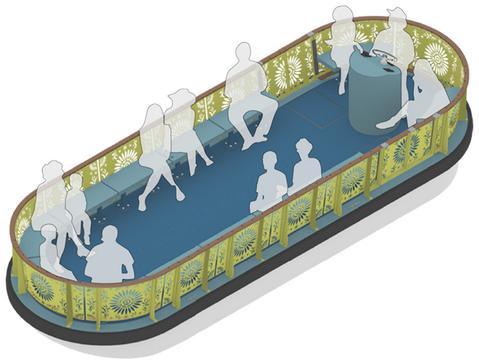

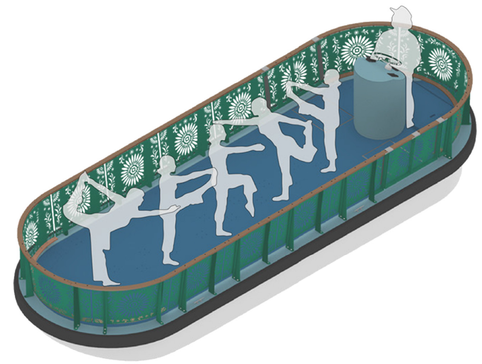

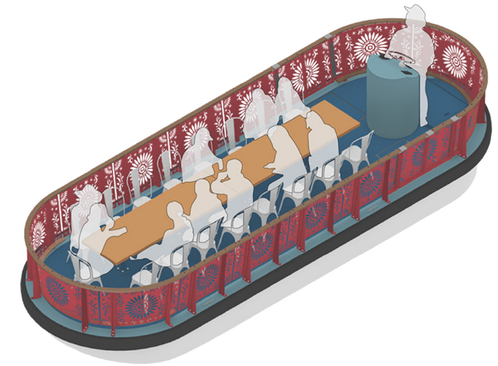

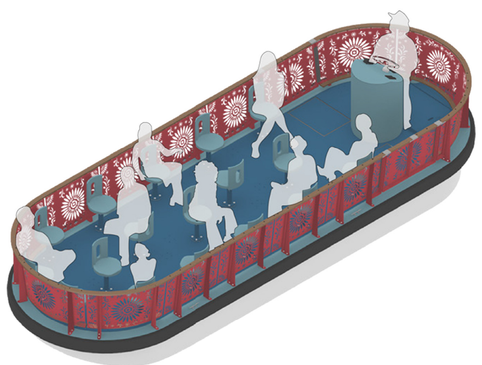

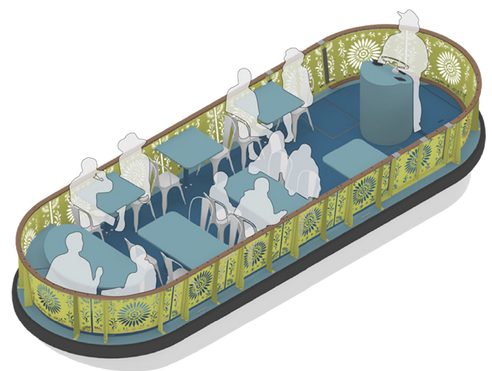

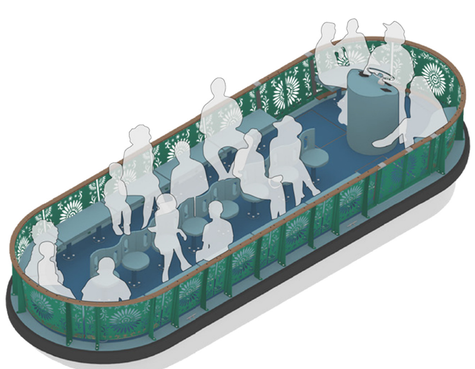

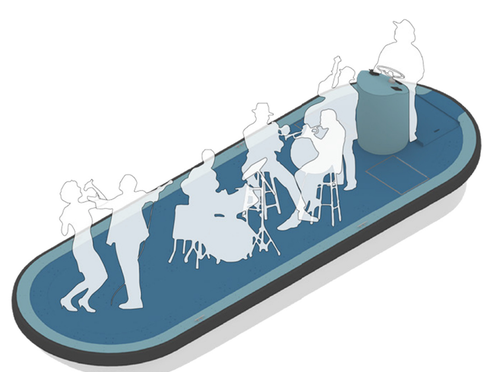

DRAWING SET LIST	TITLE
I-SERIES	INDEX DRAWINGS
H-SERIES	HULL DRAWINGS
R-SERIES	RAIL DRAWINGS
S-SERIES	SEAT AND DINING DRAWINGS
D-SERIES	DECK DRAWINGS
C-SERIES	CONSOLE DRAWINGS
A-SERIES	ACCESSORY DRAWINGS
E-SERIES	ELECTRICAL DRAWINGS
N-SERIES	CNG DRAWINGS

NO.	ISSUE	DATE
1	ADDENDUM SET 1	1 September 2016

SAN ANTONIO RIVERBOATS
PROTOTYPE

[META LAB ARCHITECTURE]
20 N Sampson St
Houston, Texas 77003
713.426.3640
www.metalabstudio.com
info@metalabstudio.com
ARCHITECT

Gaspe Nelson Design
(985) 515-1263
3004 Canal Drive,
Lake Charles, Louisiana 70605
NAVAL ARCHITECT

SAR

BID SET
NOT FOR CONSTRUCTION

SCALE AS NOTED

SHEET SIZE: 12 X 18

TITLE SHEET

SAR

SAN ANTONIO RIVERBOATS DRAWING INDEX 1

HULL DRAWINGS

DRAWING	TITLE
H-1	3D HULL STRUCTURAL IMAGES
H-2	STRUCTURAL AXON ASSEMBLY DRAWINGS
H-3	RING FRAME ASSEMBLY
H-4	RIB FRAME ASSEMBLY
H-5	LONGITUDINAL ASSEMBLY
H-6	REFERENCE FRAMES AND LONGITUDINALS
H-7	HULL BOTTOM VIEW PLAN AND KEEL PLAN AND ASSEMBLY
H-8	PLATING DETAILS
H-9	HATCH AND SKEG DETAILS
H-10	RUBRAIL
H-11	HULL SECTION A
H-12	NESTING SHEETS 1
H-13	NESTING SHEETS 2
H-14	NESTING SHEETS 3

RAIL DRAWINGS

DRAWING	TITLE
R-1	RAIL PLAN AND RAIL SCHEDULE
R-2	RAIL HARDWARE SCHEDULE, DOOR DETAILS AND HARDWARE SCHEDULE
R-3	RAIL STANCHION ASSEMBLY DRAWINGS
R-4	RAIL STANCHION DETAILS
R-5	RAIL IPE PLAN AND DETAILS
R-6	RAIL ASSEMBLY DRAWINGS 1 (S-SERIES)
R-7	RAIL ASSEMBLY DRAWINGS 2 (C-SERIES)
R-8	RAIL ASSEMBLY DRAWINGS 3 (L-SERIES)
R-9	RAIL ASSEMBLY DRAWINGS 4 (D-SERIES)
R-10	RAIL DOOR LOCKING MECHANISM 1 (D-SERIES)
R-11	RAIL DOOR LOCKING MECHANISM 2 (D-SERIES)
R-12	RAIL ARTBOARD AREA 1 (S-SERIES)
R-13	RAIL ARTBOARD AREA 2 (C-SERIES)
R-14	RAIL ARTBOARD AREA 3 (L-SERIES)
R-15	RAIL ARTBOARD AREA 4 (D-SERIES)
R-16	RAIL ARTBOARD SAMPLE 1 (S-SERIES)
R-17	RAIL ARTBOARD SAMPLE 2 (C-SERIES)
R-18	RAIL ARTBOARD SAMPLE 3 (L-SERIES)
R-19	RAIL ARTBOARD SAMPLE 4 (D-SERIES)

NO.	ISSUE	DATE
1	ADDENDUM SET 1	1 September 2016

SAN ANTONIO RIVERBOATS
PROTOTYPE

[METALAB ARCHITECTURE]
20 N Sampson St
Houston, Texas 77003
713.426.3640
www.metalabstudio.com
info@metalabstudio.com
ARCHITECT

Gaspe Nelson Design
(985) 515-1263
3004 Canal Drive
New Orleans, Louisiana 70118
NAVAL ARCHITECT

SAR

BID SET
NOT FOR CONSTRUCTION

SCALE AS NOTED
SHEET SIZE: 12 X 18

DRAWING INDEX
1 OF 4

SAR

SAN ANTONIO RIVERBOATS DRAWING INDEX 2

SEAT AND DINING DRAWINGS

DRAWING	TITLE
S-1	SEATING CONFIGURATION TYPE 1 & 2
S-2	SEATING CONFIGURATION TYPE 3 & 4
S-3	SEATING CONFIGURATION TYPE 5 & 6
S-4	BENCH PLAN AND SCHEDULE
S-5	BENCH HARDWARE SCHEDULE AND DETAILS
S-6	BENCH POST ASSEMBLY DRAWINGS 1
S-7	BENCH POST ASSEMBLY DRAWINGS 2
S-8	BENCH ASSEMBLY DRAWINGS 1 (S-SERIES)
S-9	BENCH ASSEMBLY DRAWINGS 2 (C-SERIES)
S-10	BENCH ASSEMBLY DRAWINGS 3 (L-SERIES)
S-11	BENCH ASSEMBLY DRAWINGS 4 (B-SERIES)
S-12	CHAIR PLAN AND SCHEDULE
S-13	CHAIR HARDWARE SCHEDULE AND DETAILS
S-14	CHAIR ASSEMBLY DRAWINGS
S-15	GROUP DINING PLAN AND SCHEDULE
S-16	GROUP DINING HARDWARE SCHEDULE AND DETAILS
S-17	GROUP DINING POST ASSEMBLY DRAWINGS
S-18	GROUP DINING ASSEMBLY DRAWINGS
S-19	BISTRO DINING PLAN AND SCHEDULE

SEAT AND DINING DRAWINGS (CONT.)

DRAWING	TITLE
S-20	BISTRO DINING HARDWARE SCHEDULE AND DETAILS
S-21	BISTRO DINING POST ASSEMBLY PIECES
S-22	BISTRO DINING POST ASSEMBLY DRAWINGS
S-23	BISTRO DINING ASSEMBLY DRAWINGS 2 (S-SERIES)
S-24	BISTRO DINING ASSEMBLY DRAWINGS 2 (L-SERIES)
S-25	BISTRO DINING ASSEMBLY DRAWINGS 3 (B-SERIES)

DECK DRAWINGS

DRAWING	TITLE
D-1	DECK PLAN AND DECK RIM PLATE
D-2	DECK ASSEMBLY
D-3	HULL AND DECK ASSEMBLY
D-4	DECK HARDWARE SCHEDULE AND ATTACHMENT METHOD

CONSOLE DRAWINGS

DRAWING	TITLE
C-1	CONSOLE SECTION, DETAILS, AND CUT FILES
C-2	CONSOLE MOUNTING SCHEDULE
C-3	CONSOLE ACCESSORY MOUNTING ASSEMBLY DRAWINGS

NO.	ISSUE	DATE
1	ADDENDUM SET 1	1 September 2016

SAN ANTONIO RIVERBOATS
PROTOTYPE

Gaspy Nolan Design
(985) 515-1263
3004 Canal Drive
New Orleans, LA
Louisiana 70119
NAVAL ARCHITECT

[METALAB ARCHITECTURE]
20 N Sampson St
Houston, Texas 77003
713.426.3640
www.metalabstudio.com
info@metalabstudio.com
ARCHITECT

SAR

BID SET
NOT FOR CONSTRUCTION

SCALE AS NOTED
SHEET SIZE: 12 X 18

DRAWING INDEX
2 OF 4

SAR

SAN ANTONIO RIVERBOATS DRAWING INDEX 3

ACCESSORY DRAWINGS

DRAWING	TITLE
A-1	ACCESSORY PLAN AND SCHEDULE

ELECTRICAL DRAWINGS

DRAWING	TITLE
E-1	BATTERY AND CHARGER SECTION AND DETAILS
E-2	BATTERY AND CHARGER PLAN AND SCHEDULE
E-3	PROTOTYPE WELL ARRANGEMENT (REF ONLY)
E-4	ELECTRIC WELL ARRANGEMENT
E-5	LIGHTING PLAN AND LIGHTING DETAILS

CNG DRAWINGS

DRAWING	TITLE
N-1	CNG PLAN AND SECTION
N-2	CNG CONSOLE DETAIL
N-3	CNG WELL ARRANGEMENT

QUANTITIES BY CUT LENGTH
(FOR BIDDING PURPOSES ONLY - FINAL CUT FILES PROVIDED TO WINNING BIDDER):

HULL 1/8" ALUMINUM = 80'
HULL 1/2" ALUMINUM = 151'
HULL 1/4" ALUMINUM = 175'
HULL 3/16" ALUMINUM = 1700'

RAIL 1/8" ALUMINUM = 1822' *
RAIL 3/16" ALUMINUM = 534'
RAIL 5/4" IPE = 195'
RAIL 3/4" IPE = 58'

BENCH 3/16" ALUMINUM = 155'
BENCH 3/4" PLYWOOD = 142'
CHAIR 3/16" ALUMINUM = 102'

GROUP DINING 3/16" ALUMINUM = 40'
GROUP DINING BOWLING TABLE = 46' (HOLES AND EXT. CUTS)

SPLIT DINING 3/16" ALUMINUM = 83'

* FIVE ALTERNATE PATTERNS TO BE DEVELOPED. LENGTH PROVIDED FOR BIDDING PURPOSES ONLY
ALTERNATE PATTERNS TO BE WITHIN 50% OVER AND UNDER OF THIS LENGTH.

NO.	ISSUE	DATE
1	ADDENDUM SET 1	1 September 2016

SAN ANTONIO RIVERBOATS
PROTOTYPE

[METALAB ARCHITECTURE]
20 N Sampson St
Houston, Texas 77003
713.426.3640
www.metalabstudio.com
info@metalabstudio.com
ARCHITECT

Gauthier Naval Design
(985) 515-2263
3004 Canal Drive
Metairie, Louisiana 70006
Louisiana 70506
NAVAL ARCHITECT

SAR

BID SET
NOT FOR CONSTRUCTION

SCALE AS NOTED
SHEET SIZE: 12 X 18

DRAWING INDEX
3 OF 4

SAR

SAN ANTONIO RIVERBOATS COLOR INDEX

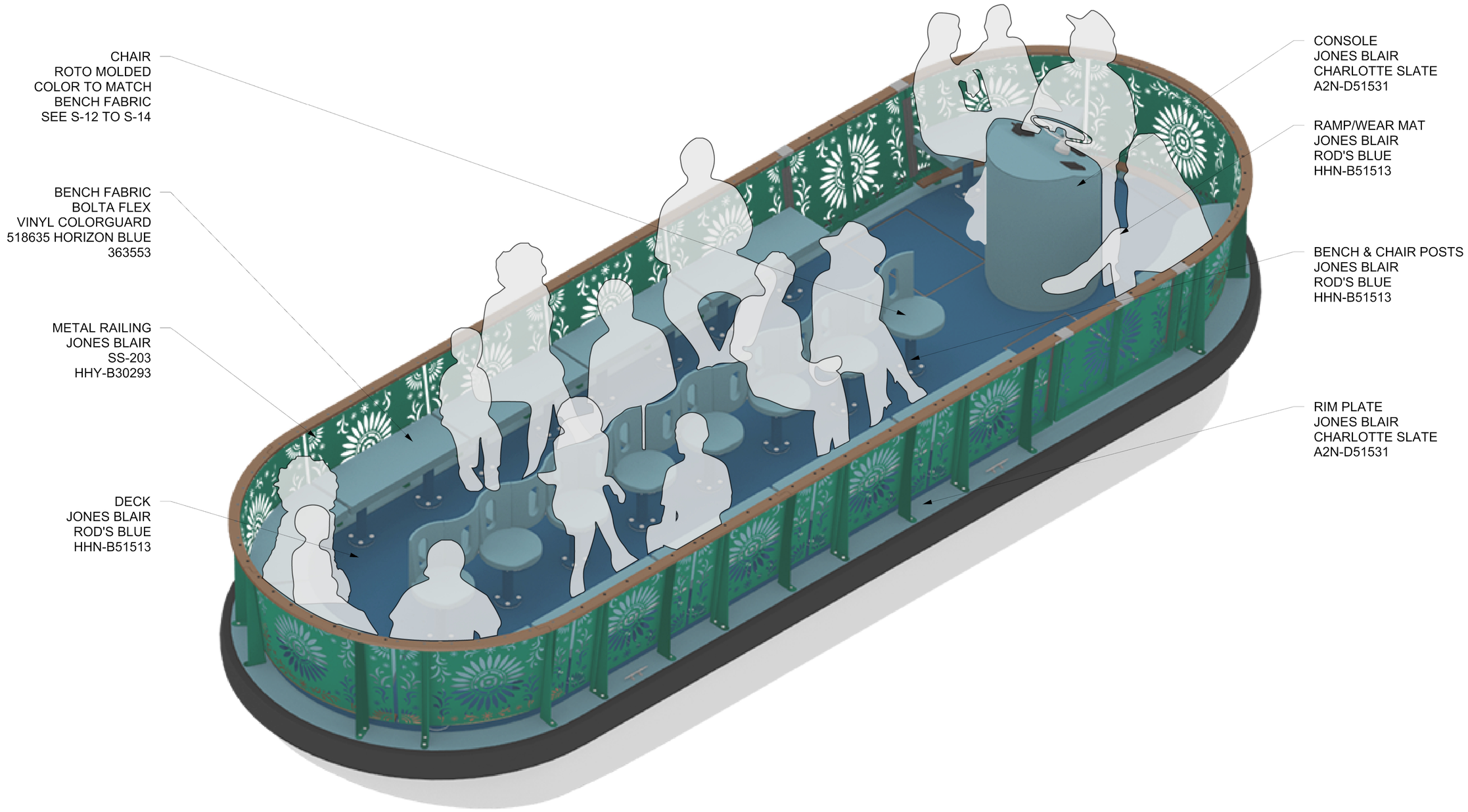

NOTE: MUST BE COMPLETED TO THE SATISFACTION OF METALAB STUDIO (SEE SPECS)

NO.	ISSUE	DATE
1	ADDENDUM SET 1	1 September 2016

SAN ANTONIO RIVERBOATS
PROTOTYPE

[METALAB ARCHITECTURE]
20 N Sampson St
Houston, Texas 77003
713.426.3640
www.metalabstudio.com
info@metalabstudio.com
ARCHITECT

Gaspe Nelson Design
(985) 515-1263
3004 Canal Drive
Metairie, Louisiana 70006
Louisiana 70006
NAVAL ARCHITECT

SAR

SHEET SIZE: 12 X 18
SCALE AS NOTED

BID SET
NOT FOR CONSTRUCTION

COLOR INDEX
3 OF 4

SAR

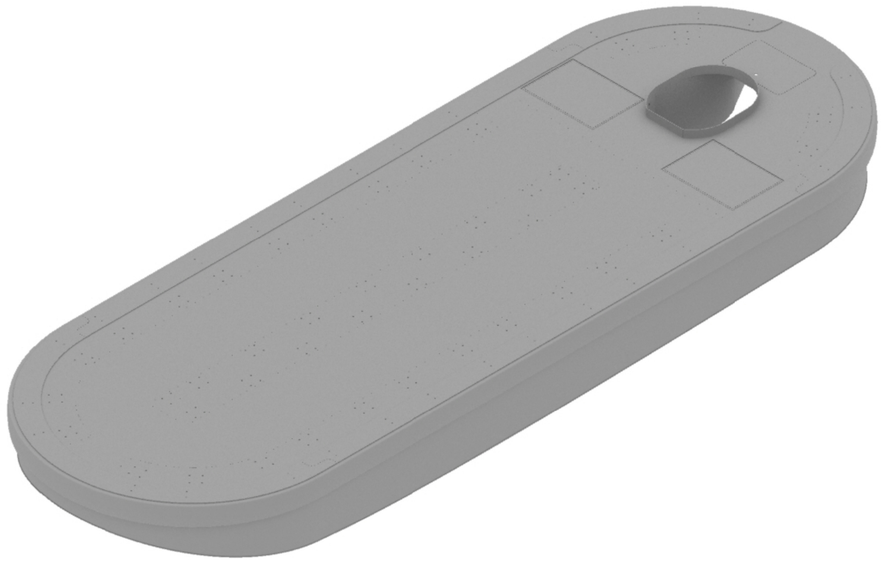

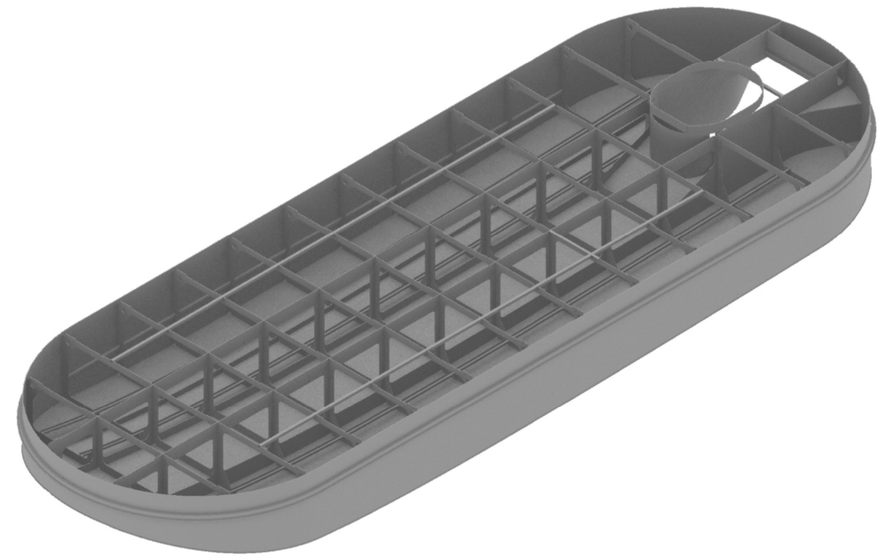

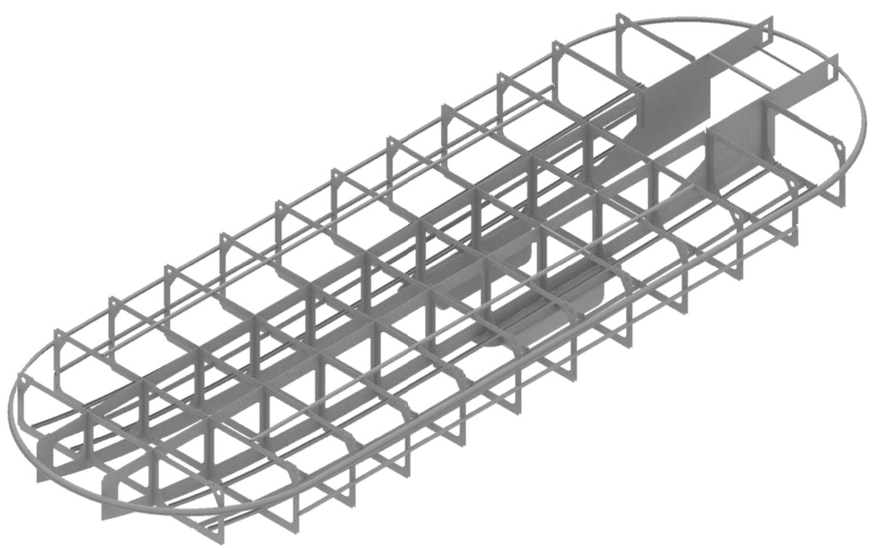

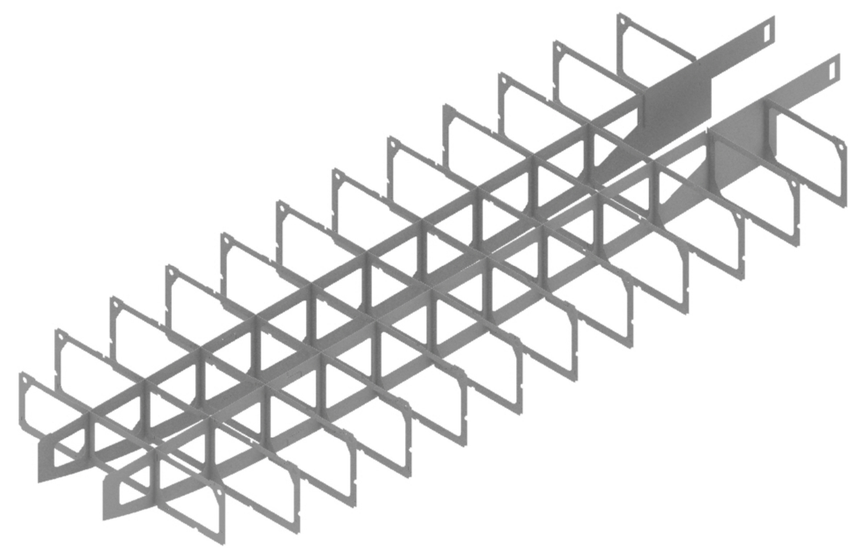

1 3D VIEWS OF HULL STRUCTURE NO SCALE

NOTE: ALL CUT FILES TO BE SUPPLIED TO WINNING BIDDER
NOTE: MUST BE COMPLETED TO THE SATISFACTION OF METALAB STUDIO (SEE SPECS)

NO.	ISSUE	DATE
1	ADDENDUM SET 1	1 September 2016

SAN ANTONIO RIVERBOATS
PROTOTYPE

[METALAB ARCHITECTURE]
20 N Sampson St
Houston, Texas 77003
713.426.3640
www.metalabstudio.com
info@metalabstudio.com
ARCHITECT

Gaspe Nelson Design
(985) 515-1263
3004 Canal Drive,
Chalmette, Louisiana 70043
NAVAL ARCHITECT

SAR

SHEET SIZE: 12 X 18
SCALE AS NOTED

BID SET
NOT FOR CONSTRUCTION

3D HULL STRUCTURAL IMAGES

H-1

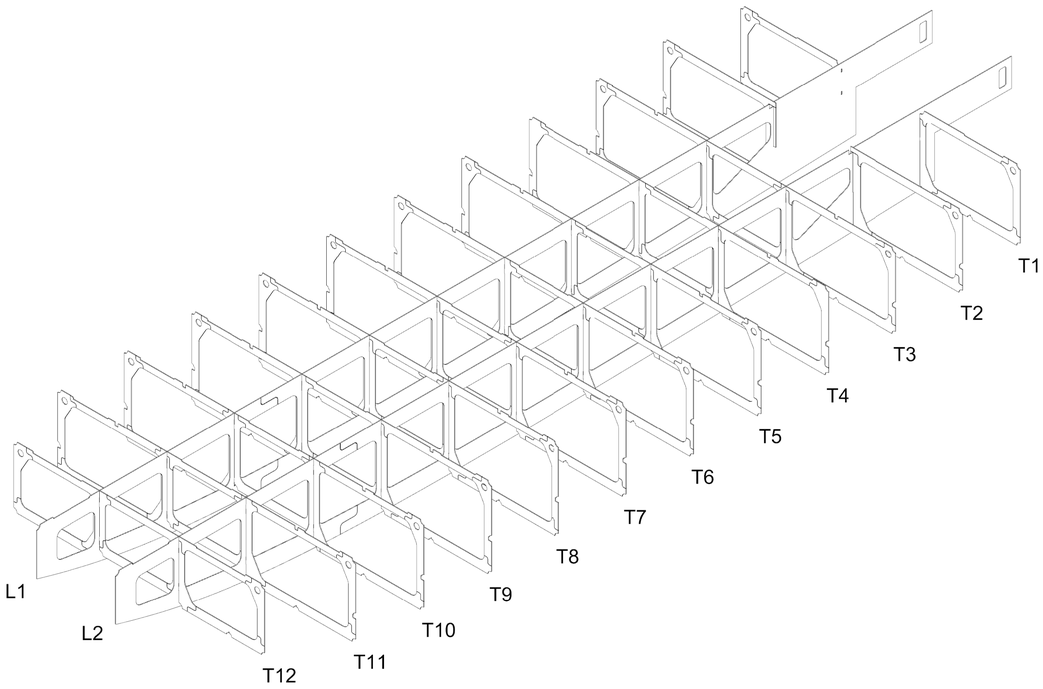

ALL RIBS 3/16" THICK
5086 ALUM. PLATE

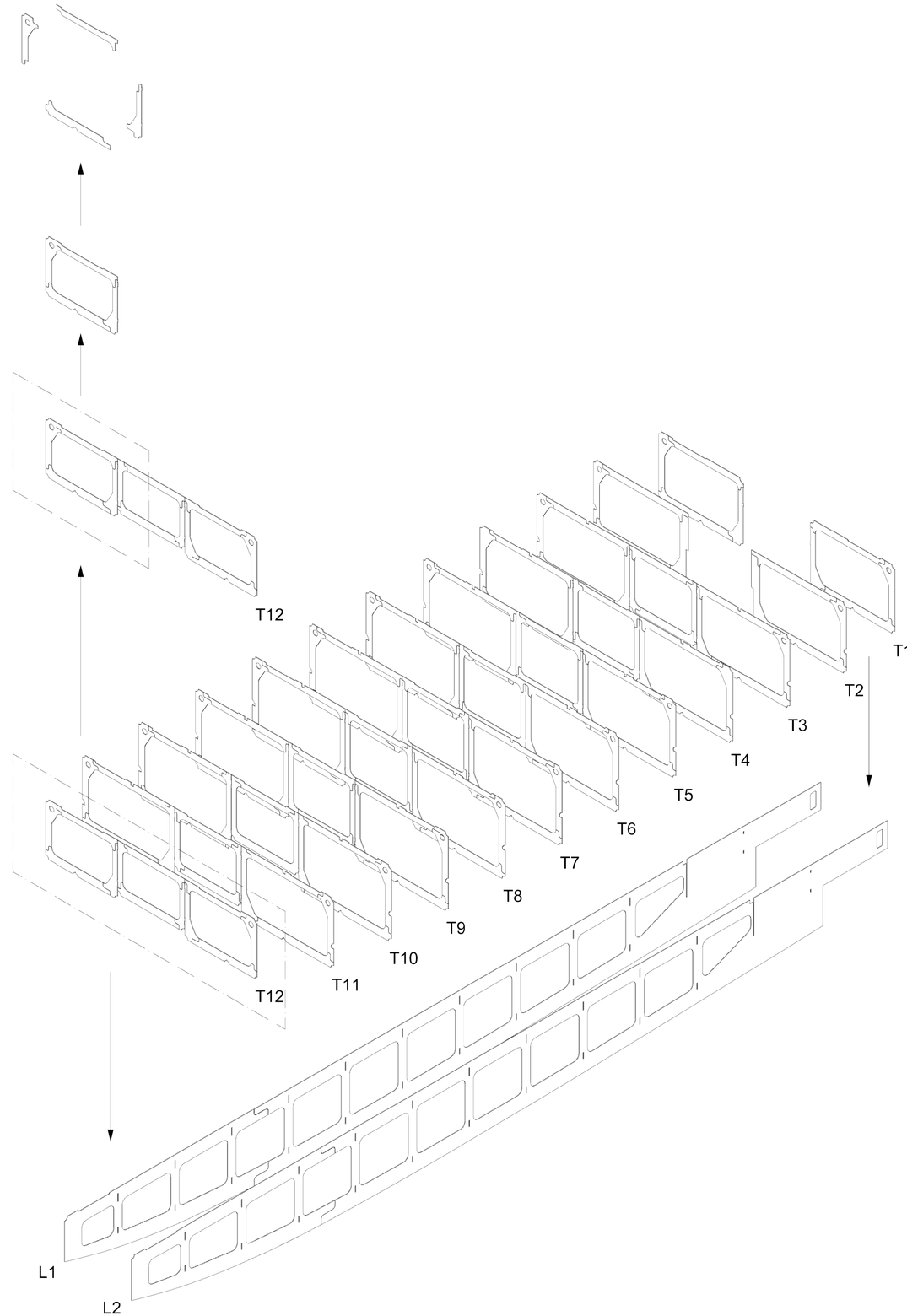

2 STRUCTURAL AXON ASSEMBLY DRAWINGS 1:36

NOTE: ALL CUT FILES TO BE SUPPLIED TO WINNING BIDDER
NOTE: MUST BE COMPLETED TO THE SATISFACTION OF METALAB STUDIO (SEE SPECS)

NO.	ISSUE	DATE
1	ADDENDUM SET 1	1 September 2016

SAN ANTONIO RIVERBOATS
PROTOTYPE

[METALAB ARCHITECTURE]
20 N Sampson St
Houston, Texas 77003
713.426.3640
www.metalabstudio.com
info@metalabstudio.com
ARCHITECT

Gwinn Marine Design
(985) 515-2263
3004 Canal Drive,
Port Sulphur, Plaquemines Parish, Louisiana 70083
NAVAL ARCHITECT

SAR

SHEET SIZE: 12 X 18
SCALE AS NOTED

BID SET
NOT FOR CONSTRUCTION

STRUCTURAL
AXON ASSEMBLY
DRAWINGS

H-2

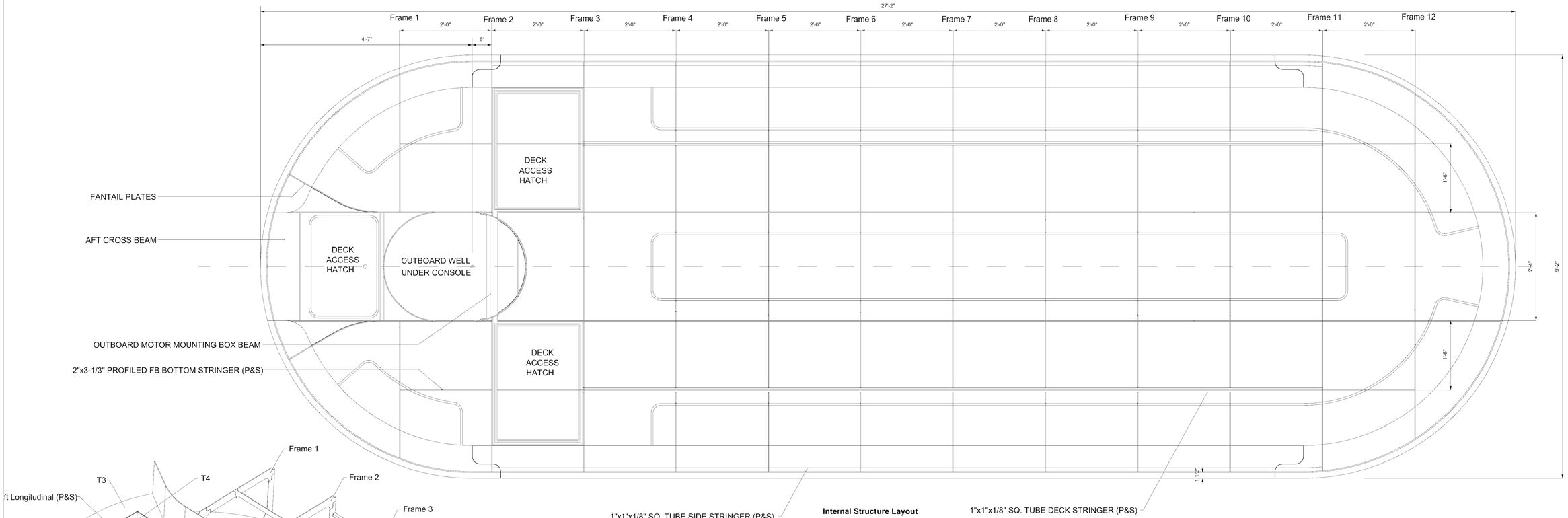

Internal Structure Layout

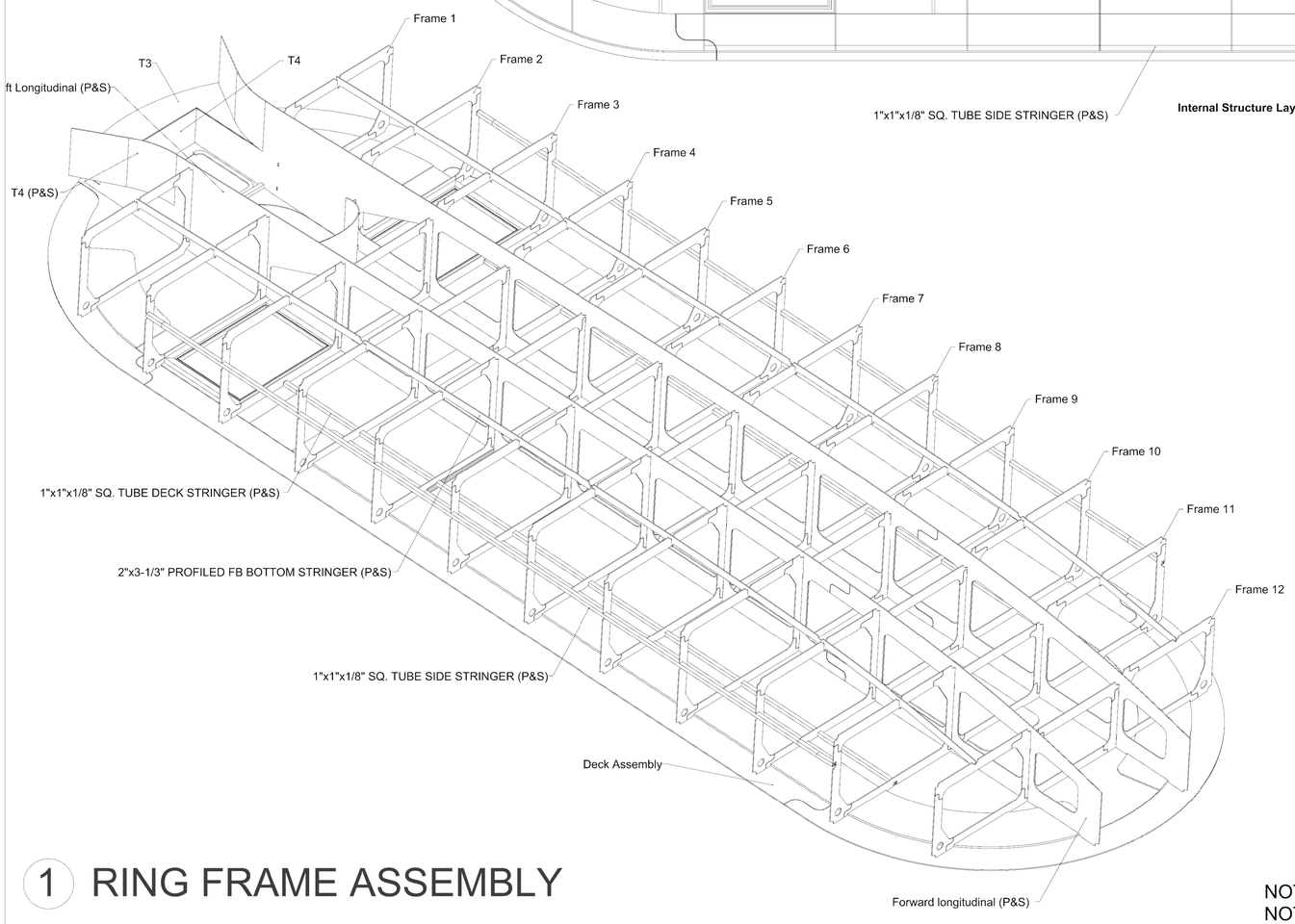

1 RING FRAME ASSEMBLY

ASSEMBLY NOTES AND RECOMMENDED PROCEEDURE:

1. The Deck Assembly is prefabricated as described in D-2 and bolted to the Construction Base to keep the boat straight.

2. It is recommended to assemble the Mid Frames and Primary Longitudinals as a sub assembly and weld all joints before placing onto the Deck Assembly. Ensure all Frame and Longitudinal Parts are square to each other. The Hull Bottom Mid Plates (Tunnel) (HB5 & HB6) may be added at this time to resist racking and to allow for full weld out of the Bottom Mid Plates in an accessible position.

2. Port & Starboard Frame parts will then be added, using the remainder of the longitudinal slots to locate. Tack weld to the Deck Assembly keeping everything square.

3. Once all internal members have been located, secured to each other and tack welded to the deck, the hull sides may be positioned against the frames and held in place by tack welds. It is recommended to pre-roll the end plates to 9'-0" diameter before placing them onto the assembly.

4. The outboard well forward radius plate must also be pre-rolled and placed into position between the primary longitudinals.

5. The fantail plates can then be positioned and the aft end cross beam closed up.

6. Finally the aft sloping tunnel plate and the bottom plates close off the hull.

7. The boat may then be fullly welded and released from the Construction Base.

NOTE: ALL CUT FILES TO BE SUPPLIED TO WINNING BIDDER
NOTE: MUST BE COMPLETED TO THE SATISFACTION OF METALAB STUDIO (SEE SPECS)

NO.	ISSUE	DATE
1	ADDENDUM SET 1	1 September 2016

Gaines Nelson Design
(985) 515-1263
30004 Cantel Drive,
Mandeville, La.
Louisiana 70471

NAVAL ARCHITECT

SAN ANTONIO RIVERBOATS
PROTOTYPE

[METALAB ARCHITECTURE]
20 N Sampson St
Houston, Texas 77003
713.426.3640
www.metalabstudio.com
info@metalabstudio.com
ARCHITECT

SAR

BID SET
NOT FOR CONSTRUCTION

SHEET SIZE: 12 X 18
SCALE AS NOTED

RING FRAME ASSEMBLY

H-3

1 STRUCTURAL RIB ELEMENTS

NOTES:

1. All Frame parts are 3/16" Aluminum 5086 Alloy.

2. All part butt gaps are 1/16" typical. All slot tolerances are 1/16" also.

3. The individual Ring Frames should be assembled and fully welded on a flat surface. Precautions should be made to ensure the reference dimensions are maintained and that the ring frame is flat.

4. Label each Ring Frame using a black marker with the appropriate frame refererence.

NOTE: ALL CUT FILES TO BE SUPPLIED TO WINNING BIDDER
NOTE: MUST BE COMPLETED TO THE SATISFACTION OF METALAB STUDIO (SEE SPECS)

NO.	ISSUE	DATE
1	ADDENDUM SET 1	1 September 2016

Gaspy Nelson Design
(985) 515-1263
3004 Canal Drive,
Mandeville, Louisiana 70448
NAVAL ARCHITECT

SAN ANTONIO RIVERBOATS
PROTOTYPE

[METALAB ARCHITECTURE]
20 N Sampson St
Houston, Texas 77003
713.426.3640
www.metalabstudio.com
info@metalabstudio.com
ARCHITECT

SAR

SHEET SIZE: 12 X 18
SCALE AS NOTED

BID SET
NOT FOR CONSTRUCTION

RIB FRAME ASSEMBLY

H-4

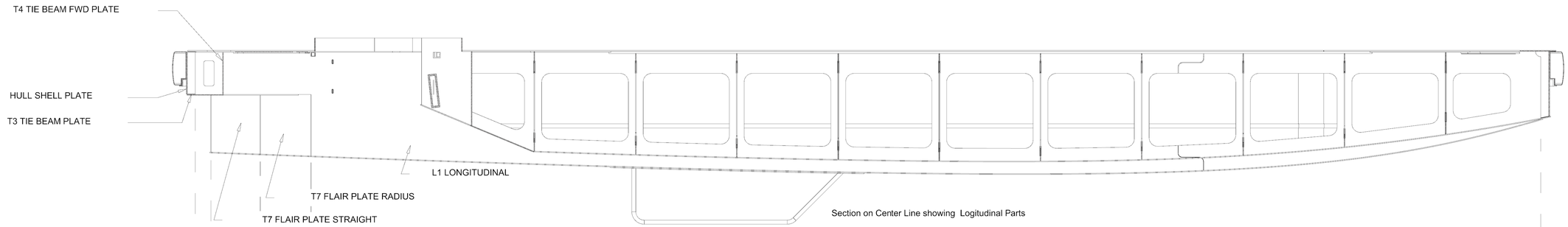

Section on Center Line showing Logitudinal Parts

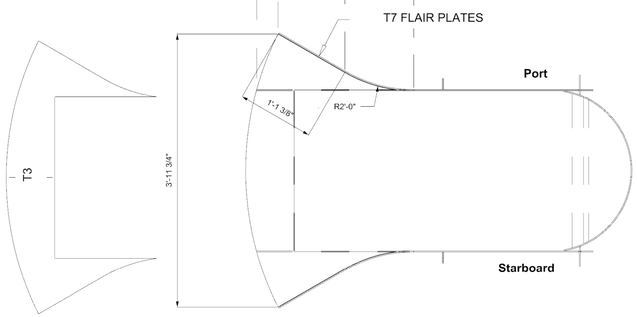

Part T3 may be used as a template in the bending of T7 Port & Starboard

NOTES:

1. All Longitudinal parts are 3/16" Aluminum 5086 Alloy.

2. All part butt gaps are 1/16" typical. All slot tolerances are 1/16" also.

3. The individual Longitudinals should be assembled and fully welded on a flat surface. Precautions should be made to ensure the reference dimensions are maintained and that the assembly is flat.

4. Port and Starboard longitudinals are opposite.

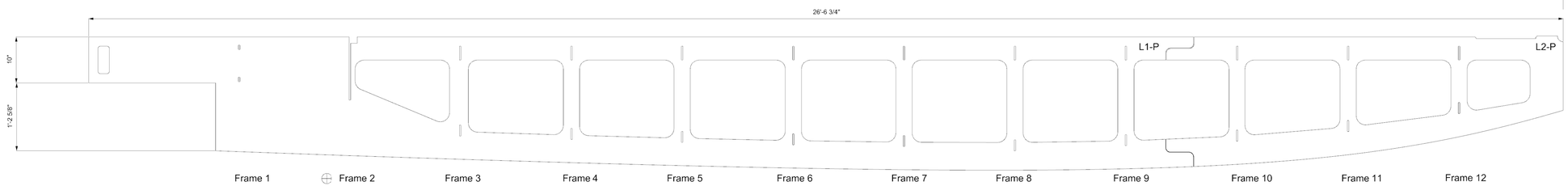

Typical Logitudinal Parts (Port & Stbd)

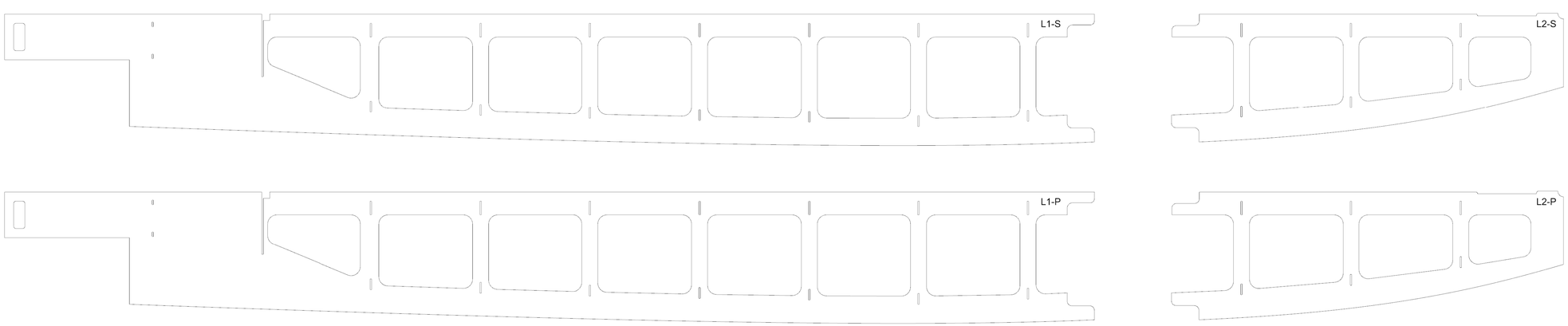

Longitudinal Component Parts
(Quantity 2 Port, 2 Starboard)

1 LONGITUDINAL ASSEMBLY

NOTE: ALL CUT FILES TO BE SUPPLIED TO WINNING BIDDER
NOTE: MUST BE COMPLETED TO THE SATISFACTION OF METALAB STUDIO (SEE SPECS)

NO.	ISSUE	DATE
1	ADDENDUM SET 1	1 September 2016

SAN ANTONIO RIVERBOATS
PROTOTYPE

[METALAB ARCHITECTURE]
20 N Sampson St
Houston, Texas 77003
713.426.3640
www.metalabstudio.com
info@metalabstudio.com
ARCHITECT

George Nelson Design
(985) 515-2263
30004 Cantel Drive,
Ponchatoula, Tx
Louisiana 70454
NAVAL ARCHITECT

SAR

BID SET
NOT FOR CONSTRUCTION

SHEET SIZE: 12 X 18
SCALE AS NOTED

LONGITUDINAL ASSEMBLY

H-5

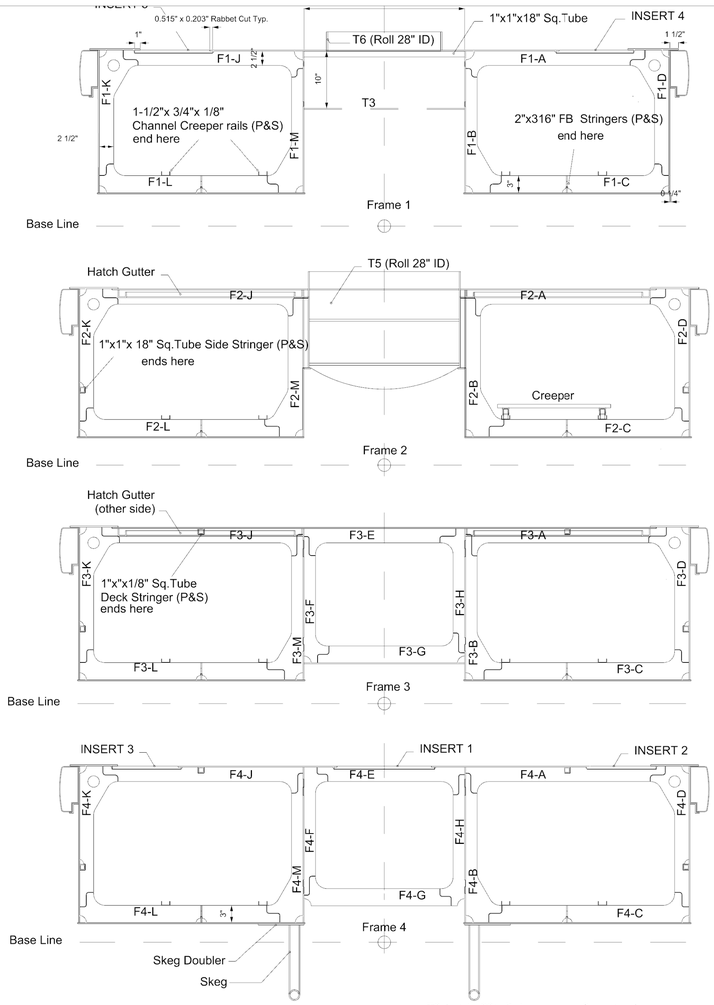

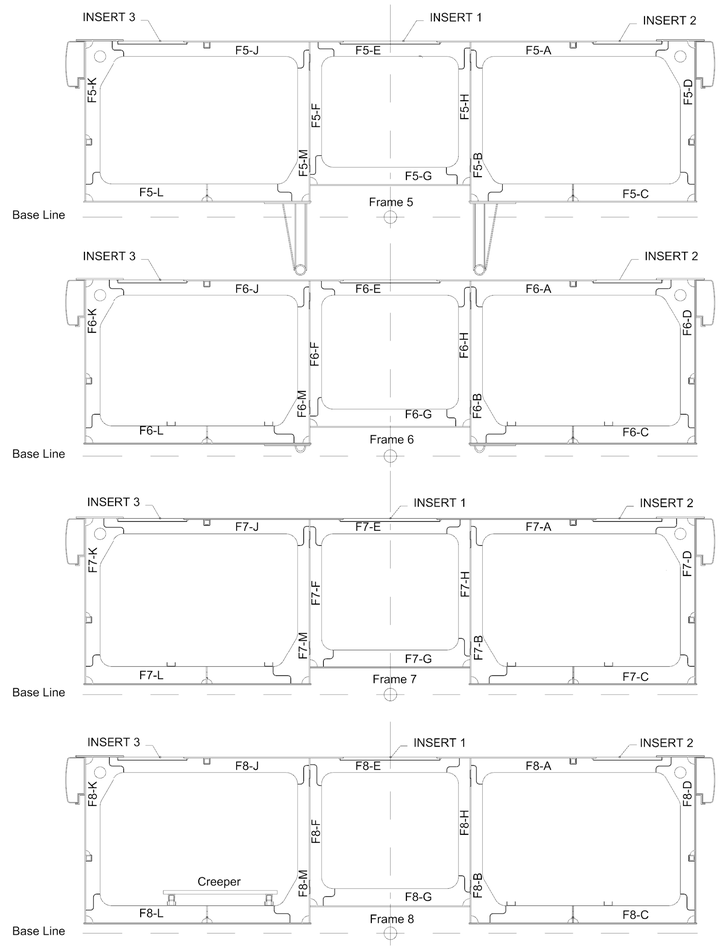

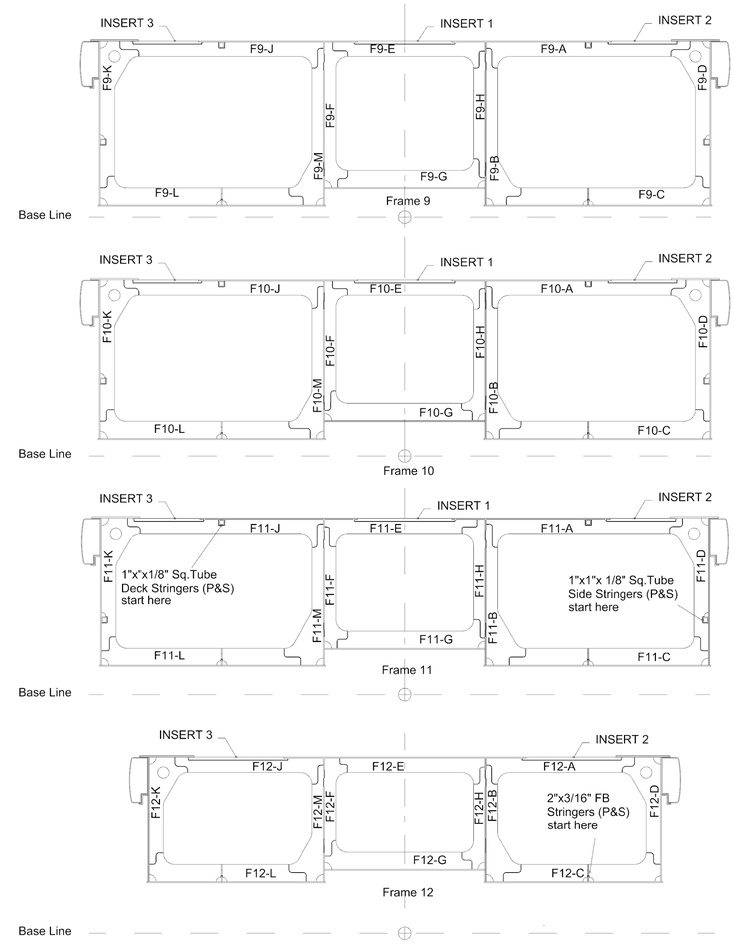

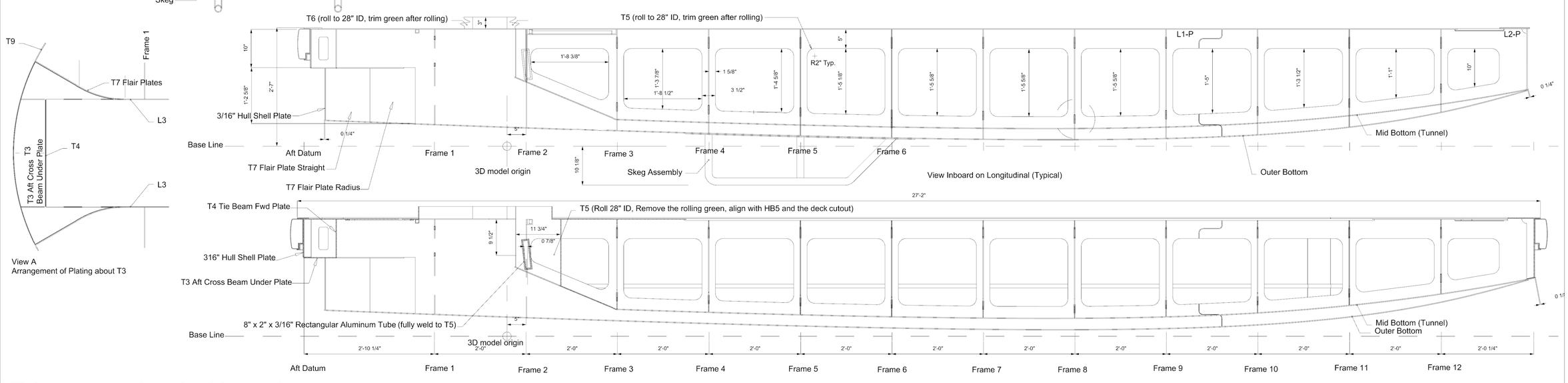

NOTE: Dimensions are annoted from Frame 1 to Frame 12, Deviations from Frame 1 are individually noted at the appropriate frame.

1 REFERENCE FRAMES AND LONGITUDINALS

NOTE: ALL CUT FILES TO BE SUPPLIED TO WINNING BIDDER
NOTE: MUST BE COMPLETED TO THE SATISFACTION OF METALAB STUDIO (SEE SPECS)

NO.	ISSUE	DATE
1	ADDENDUM SET 1	1 September 2016

NAVAL ARCHITECT

SAN ANTONIO RIVERBOATS
PROTOTYPE

[METALAB ARCHITECTURE]
20 N Sampson St
Houston, Texas 77003
713.426.3640
www.metalabstudio.com
info@metalabstudio.com
ARCHITECT

SAR

BID SET
NOT FOR CONSTRUCTION

SHEET SIZE: 12 X 18
SCALE AS NOTED

REFERENCE FRAMES AND LONGITUDINALS

H-6

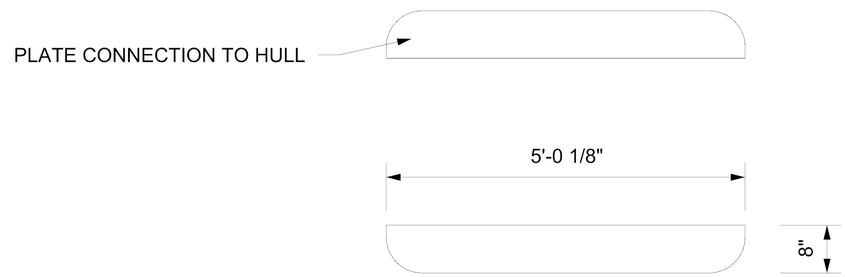

SKEG DOUBLER (X 2)

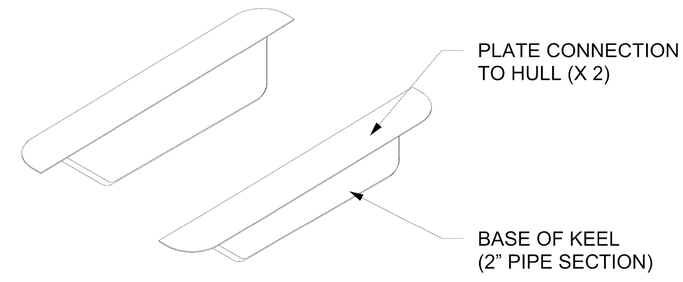

2 KEEL PLAN AND ASSEMBLY 1:24

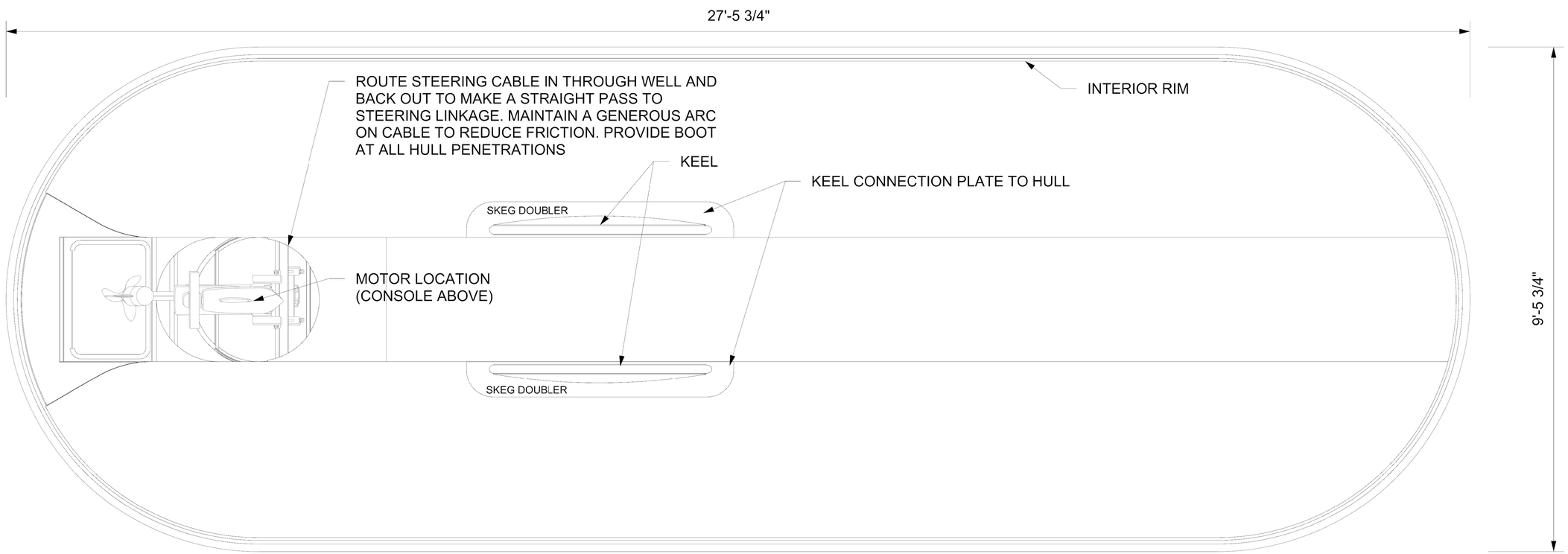

1 HULL BOTTOM VIEW PLAN 1:24

NOTE: ALL CUT FILES TO BE SUPPLIED TO WINNING BIDDER
NOTE: MUST BE COMPLETED TO THE SATISFACTION OF METALAB STUDIO (SEE SPECS)

NO.	ISSUE	DATE
1	ADDENDUM SET 1	15 September 2016

SAN ANTONIO RIVERBOATS
PROTOTYPE

[METALAB ARCHITECTURE]
20 N Sampson St
Houston, Texas 77003
713.426.3640
www.metalabstudio.com
info@metalabstudio.com
ARCHITECT

Gregg Nelson Design
(985) 515-1263
3004 Canal Drive
Metairie, Louisiana 70006
NAVAL ARCHITECT

SAR

BID SET
NOT FOR CONSTRUCTION

SHEET SIZE: 12 X 18
SCALE AS NOTED

HULL BOTTOM
VIEW PLAN;
KEEL PLAN
AND ASSEMBLY

H-7

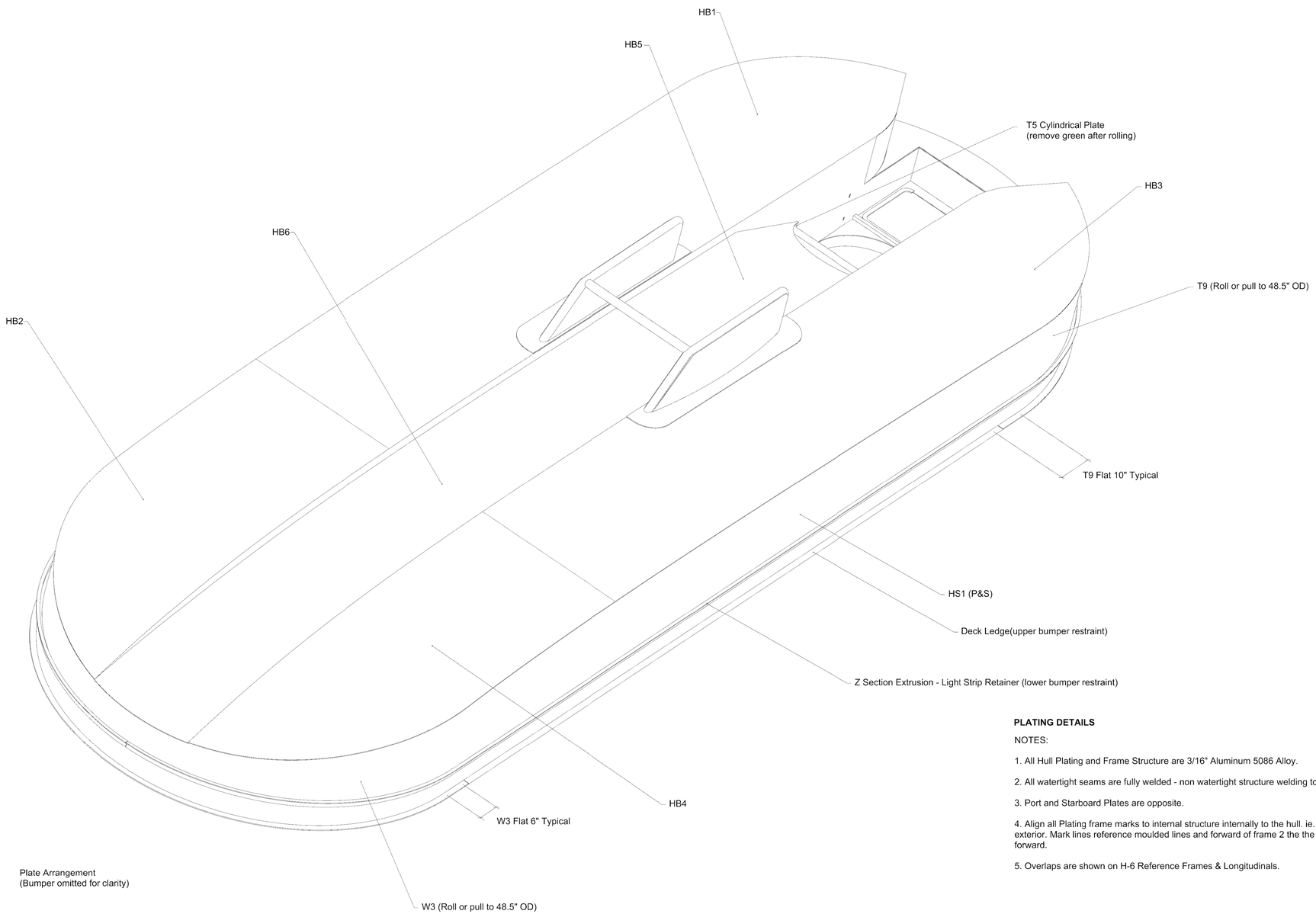

Plate Arrangement
(Bumper omitted for clarity)

PLATING DETAILS

NOTES:

1. All Hull Plating and Frame Structure are 3/16" Aluminum 5086 Alloy.

2. All watertight seams are fully welded - non watertight structure welding to be intermittent .

3. Port and Starboard Plates are opposite.

4. Align all Plating frame marks to internal structure internally to the hull. ie. there will be no mark lines on the hull exterior. Mark lines reference moulded lines and forward of frame 2 the the throw is aft, frames 1 and 2 the throw is forward.

5. Overlaps are shown on H-6 Reference Frames & Longitudinals.

1 PLATING DETAILS

NOTE: ALL CUT FILES TO BE SUPPLIED TO WINNING BIDDER
NOTE: MUST BE COMPLETED TO THE SATISFACTION OF METALAB STUDIO (SEE SPECS)

NO.	ISSUE	DATE
1	ADDENDUM SET 1	1 September 2016

SAN ANTONIO RIVERBOATS
PROTOTYPE

[METALAB ARCHITECTURE]
20 N Sampson St
Houston, Texas 77003
713.426.3640
www.metalabstudio.com
info@metalabstudio.com
ARCHITECT

Gaston Nelson Design
(985) 515-2263
3004A Canal Drive,
New Orleans, Louisiana 70118
NAVAL ARCHITECT

SAR

BID SET
NOT FOR CONSTRUCTION

SCALE AS NOTED
SHEET SIZE: 12 X 18

PLATING DETAILS

H-8

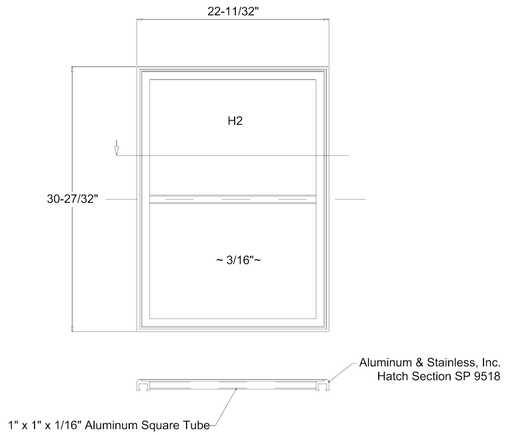

MAIN HATCH ASSEMBLY - Quantity 2

All plate and sections are to be 5086 Aluminum Alloy.

Some adjustment of the H2 plates may be necessay due to unknown dimensions on the A&S Section

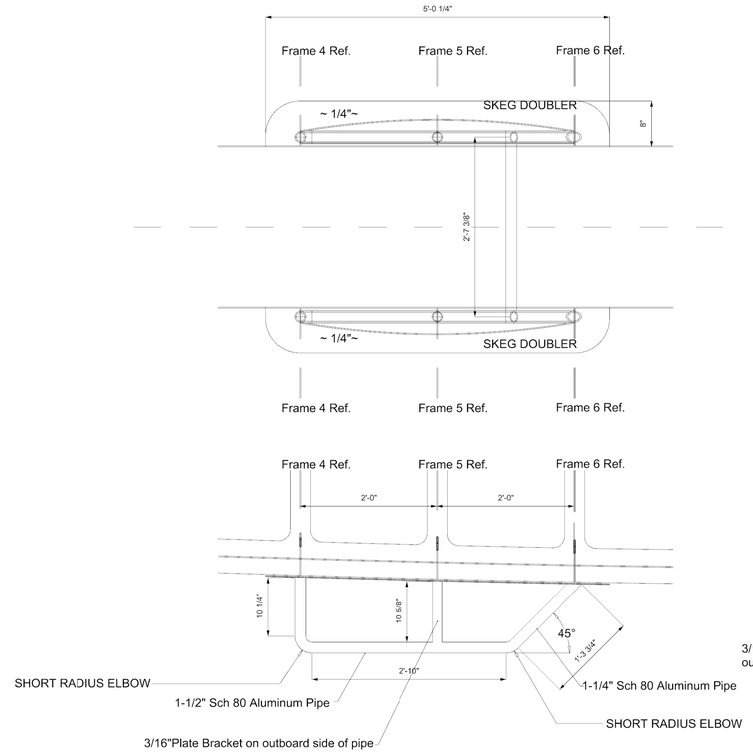

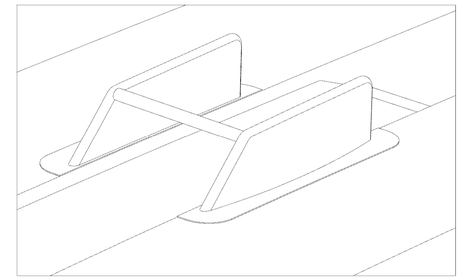

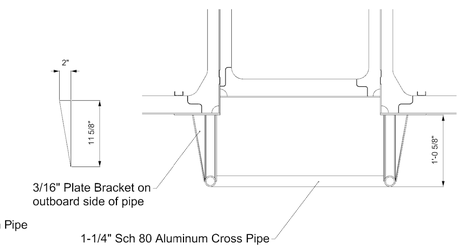

SKEG ASSEMBLY -

All plate and pipe is 5086 Aluminum Alloy.

Skeg assemblies are to be fully welded. Add plug welds as needed to the skeg plates.

The Skeg Doubler will be welded to the Hull Bottom adjacent to frames 4, 5 & 6.

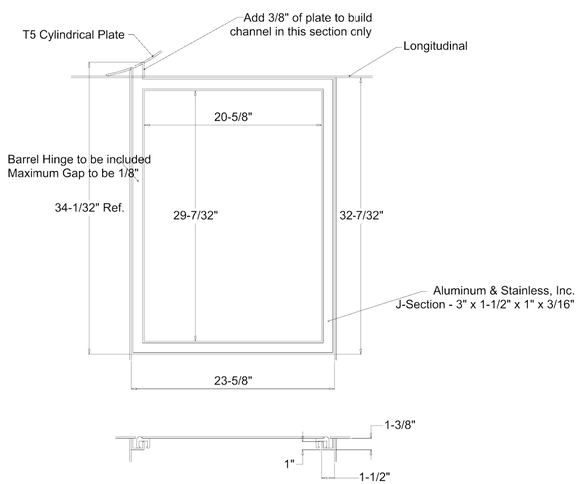

MAIN HATCH GUTTER ASSEMBLY - Quantity 1 as shown, 1 opposite

All plate and sections are to be 5086 Aluminum Alloy.

Fully weld the Gutters but bond into the Main Structure.

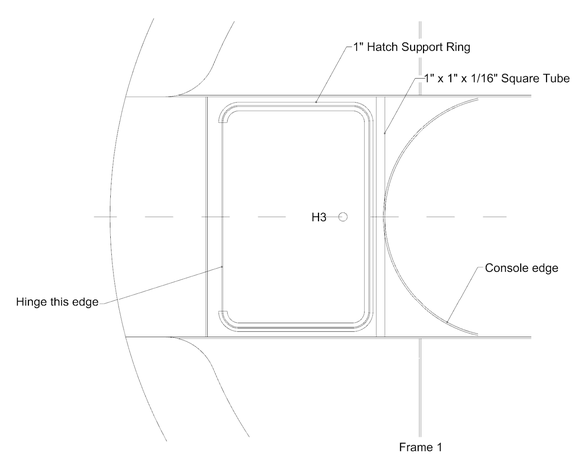

PROP INSPECTION HATCH - Quantity 1
View on Deck, Deck Hidden

All plate 3/16" 5086 Aluminum Alloy.

Weld the 1" Hatch support ring to the underside of the deck.

The free edge will Hinge to open the hatch, the piano hinge or similar is to the yard standard.

1 HATCH AND SKEG DETAILS

NOTE: ALL CUT FILES TO BE SUPPLIED TO WINNING BIDDER
NOTE: MUST BE COMPLETED TO THE SATISFACTION OF METALAB STUDIO (SEE SPECS)

NO.	ISSUE	DATE
1	ADDENDUM SET 1	1 September 2016

SAN ANTONIO RIVERBOATS
PROTOTYPE

[METALAB ARCHITECTURE]
20 N Sampson St
Houston, Texas 77003
713.426.3640
www.metalabstudio.com
info@metalabstudio.com
ARCHITECT

Gaston Nelson Design
(985) 515-1263
3004 Canal Drive,
New Orleans
Louisiana 70119
NAVAL ARCHITECT

SAR

SHEET SIZE: 12 X 18
SCALE AS NOTED

BID SET
NOT FOR CONSTRUCTION

HATCH AND SKEG DETAILS

H-9

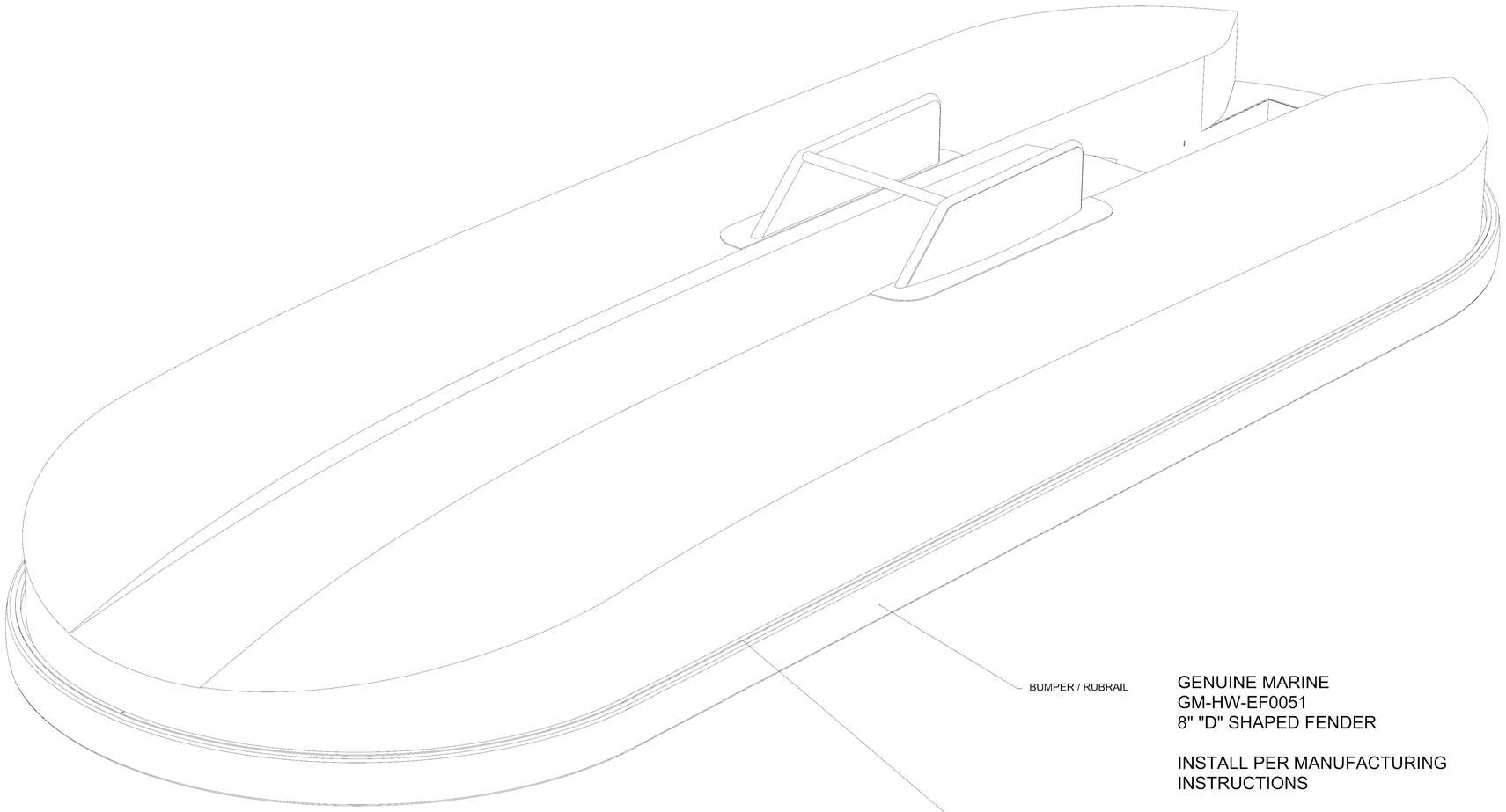

GENUINE MARINE
GM-HW-EF0051
8" "D" SHAPED FENDER

INSTALL PER MANUFACTURING
INSTRUCTIONS

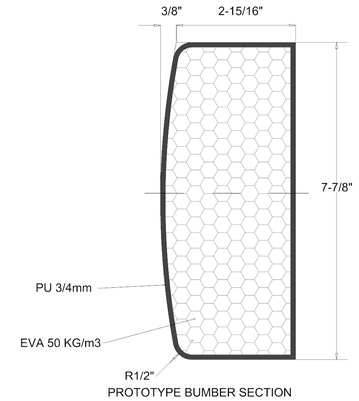

PROTOTYPE BUMBER SECTION

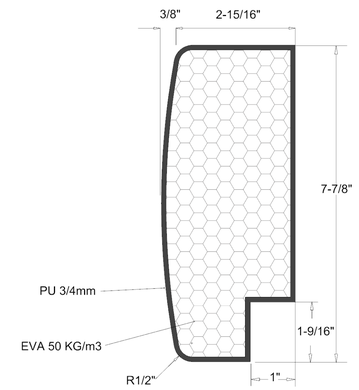

REVISED BUMBER SECTION

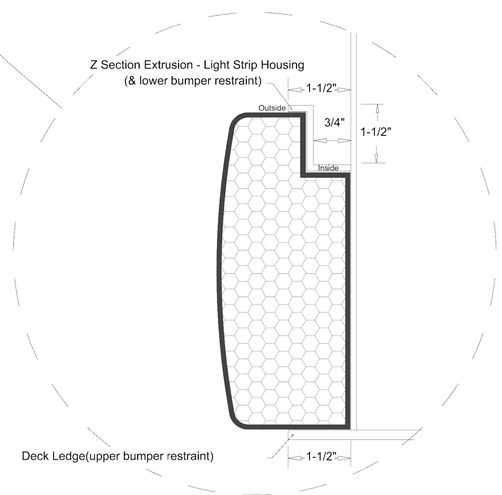

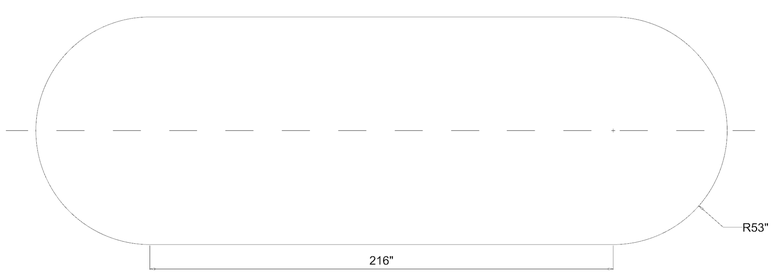

Bumper Structure Perimeter Reference

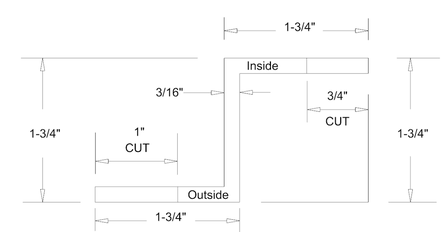

ALUMINUM Z SHAPE EXTRUSION
(TRIM TO SIZE)

1 RUBRAIL

NOTE: ALL CUT FILES TO BE SUPPLIED TO WINNING BIDDER
NOTE: MUST BE COMPLETED TO THE SATISFACTION OF METALAB STUDIO (SEE SPECS)

NO.	ISSUE	DATE
1	ADDENDUM SET 1	1 September 2016

SAN ANTONIO RIVERBOATS
PROTOTYPE

[METALAB ARCHITECTURE]
20 N Sampson St
Houston, Texas 77003
713.426.3640
www.metalabstudio.com
info@metalabstudio.com
ARCHITECT

Gerry Mann Design
(985) 515-2303
3004 Canal Drive
Metairie, Louisiana 70006
Louisiana 70506
NAVAL ARCHITECT

SAR

SHEET SIZE: 12 X 18
SCALE AS NOTED

BID SET
NOT FOR CONSTRUCTION

RUBRAIL

H-10

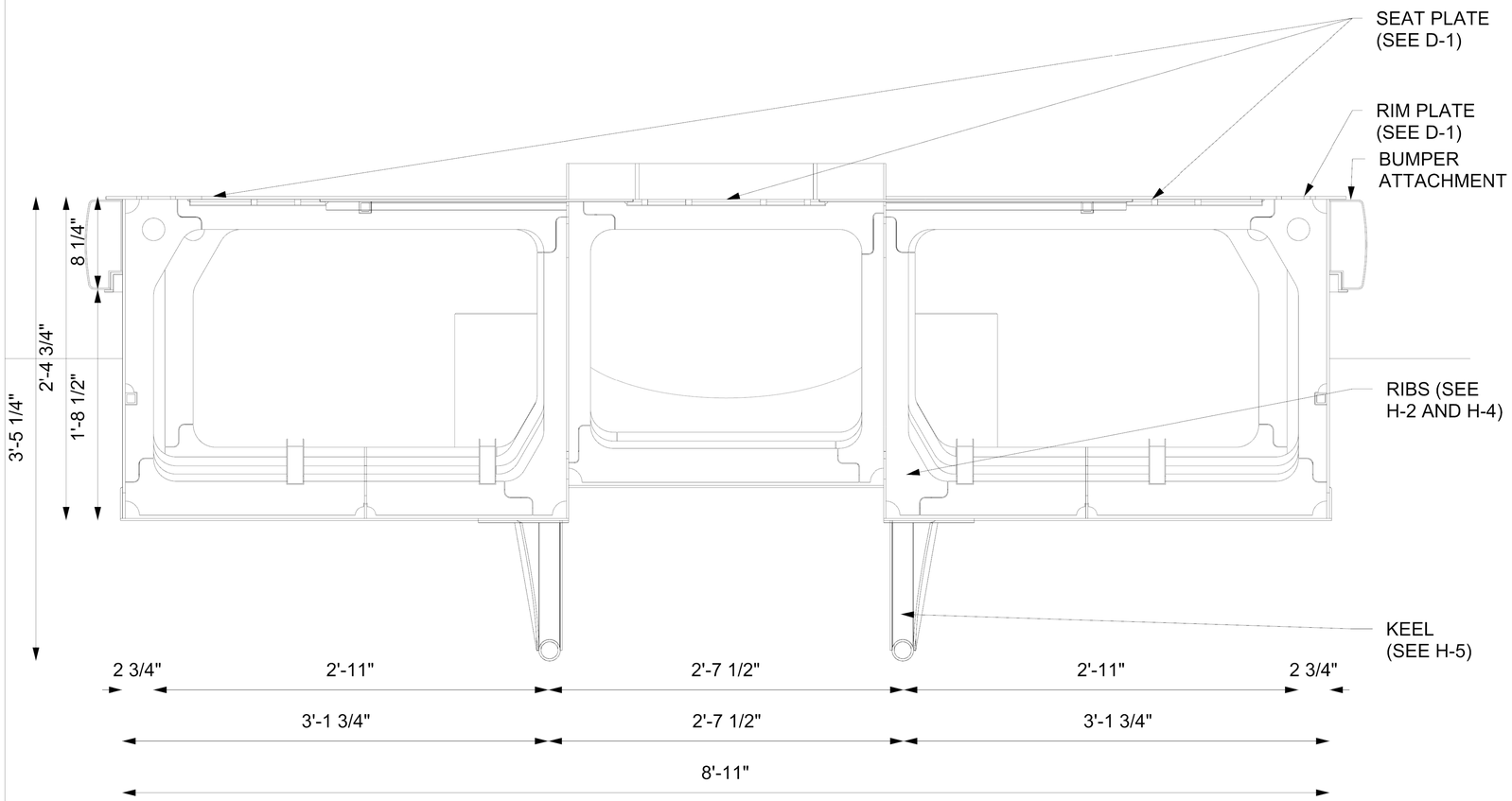

NOTE: ALL CUT FILES TO BE SUPPLIED TO WINNING BIDDER
NOTE: MUST BE COMPLETED TO THE SATISFACTION OF METALAB STUDIO (SEE SPECS)

1 HULL SECTION A 1:12

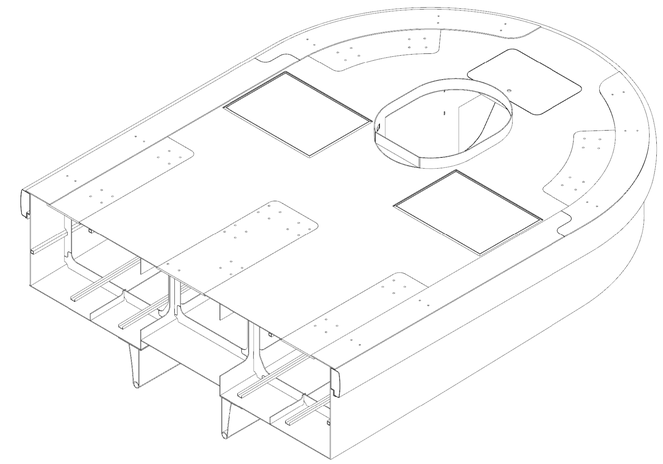

SECTION A

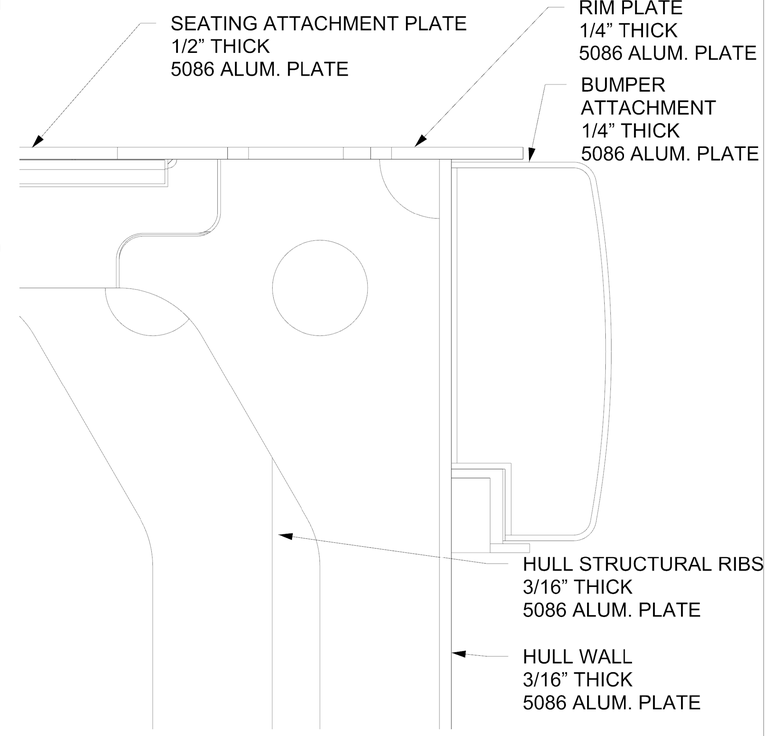

2 HULL SECTION DETAIL 1:12

NO.	ISSUE	DATE
1	ADDENDUM SET 1	1 September 2016

SAN ANTONIO RIVERBOATS
PROTOTYPE

[METALAB ARCHITECTURE]
20 N Sampson St
Houston, Texas 77003
713.426.3640
www.metalabstudio.com
info@metalabstudio.com
ARCHITECT

Gerry Mann Design
(985) 515-2303
3004 Canal Drive
Slidell, Louisiana 70460
NAVAL ARCHITECT

SAR

SHEET SIZE: 12 X 18
SCALE AS NOTED

BID SET
NOT FOR CONSTRUCTION

HULL SECTION A

H-11

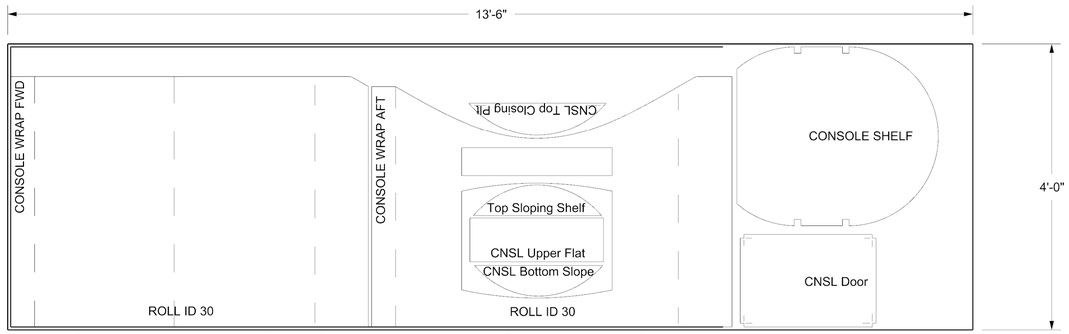

NESTED PIECES HULL (1/8" THICK) 1:24

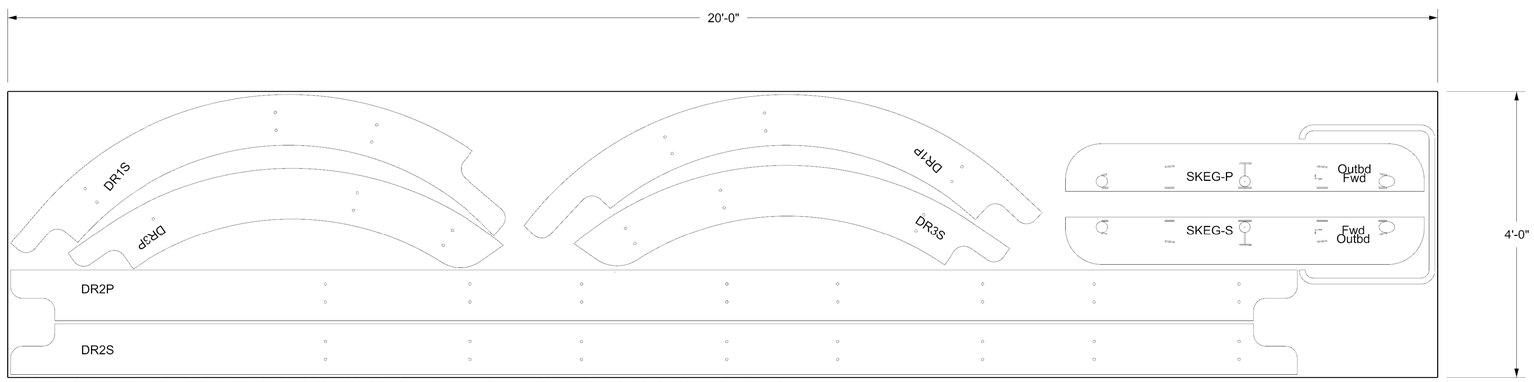

NESTED PIECES HULL (1/4" THICK) 1:24

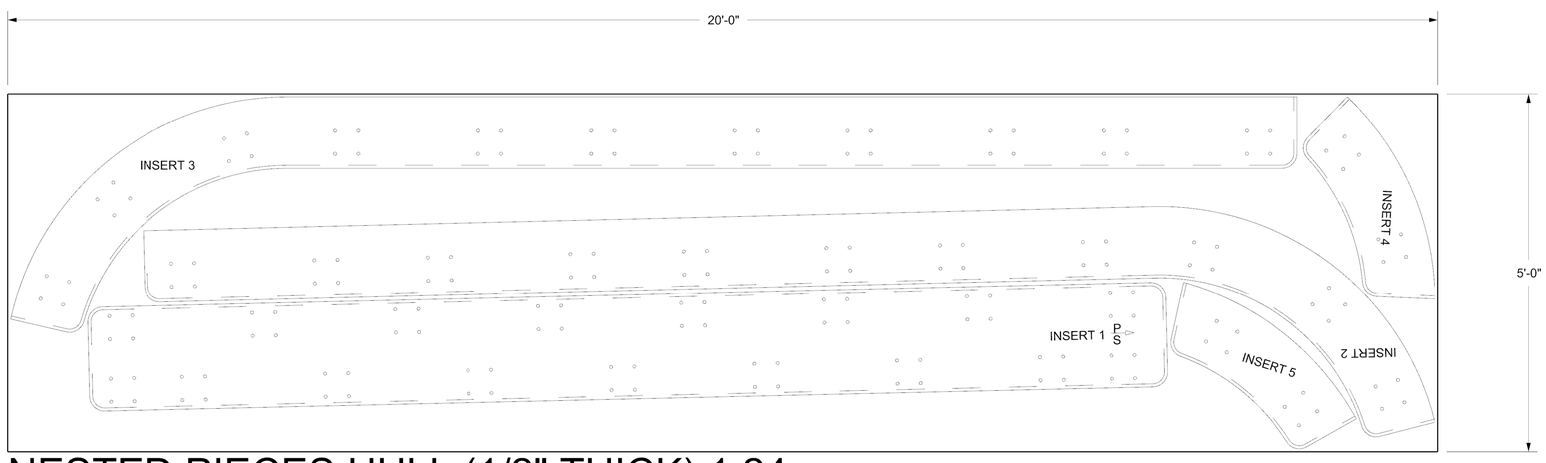

NESTED PIECES HULL (1/2" THICK) 1:24

1 NESTING SHEETS 1:24

NOTE: ALL CUT FILES TO BE SUPPLIED TO WINNING BIDDER
NOTE: MUST BE COMPLETED TO THE SATISFACTION OF METALAB STUDIO (SEE SPECS)

NO.	ISSUE	DATE
1	ADDENDUM SET 1	1 September 2016

Gregory Nelson Design
(985) 515-1263
30004 Central Drive,
Ponchatoula, Louisiana 70454
NAVAL ARCHITECT

SAN ANTONIO RIVERBOATS
PROTOTYPE

[METALAB ARCHITECTURE]
20 N Sampson St
Houston, Texas 77003
713.426.3640
www.metalabstudio.com
info@metalabstudio.com
ARCHITECT

SAR

SHEET SIZE: 12 X 18
SCALE AS NOTED

BID SET
NOT FOR CONSTRUCTION

NESTING
SHEETS 1

H-12

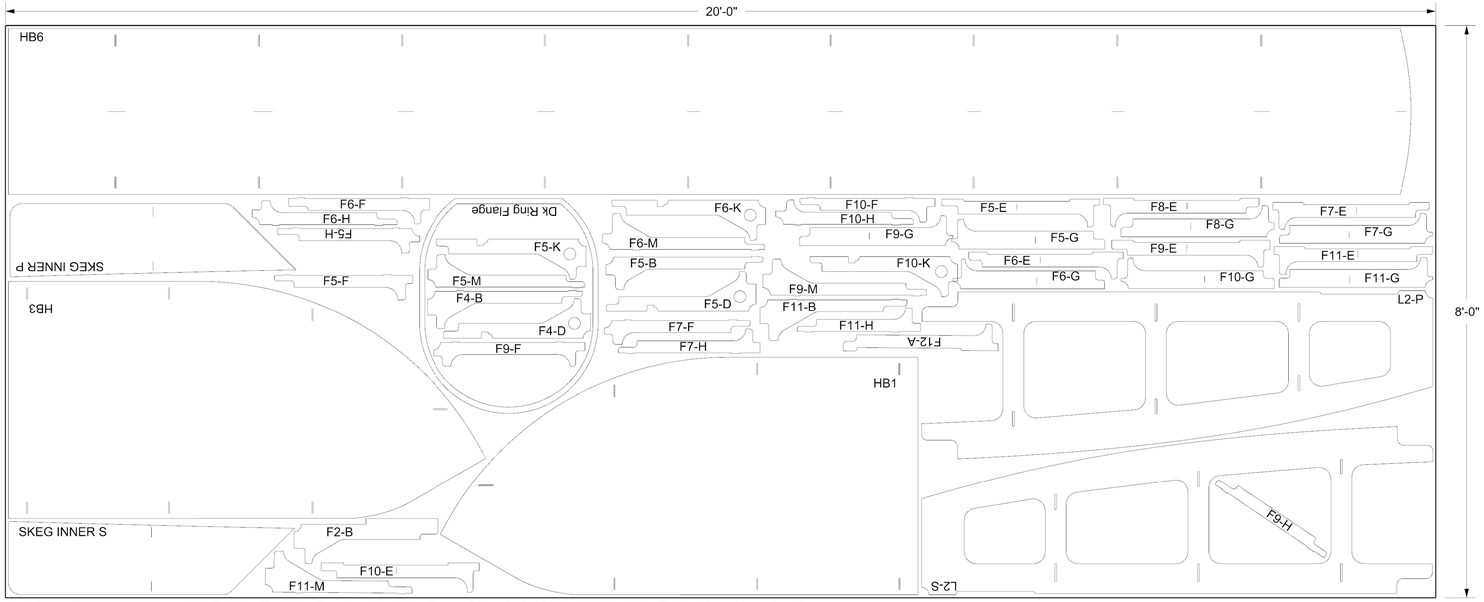

NESTED PIECES HULL (3/16" THICK) 1:24

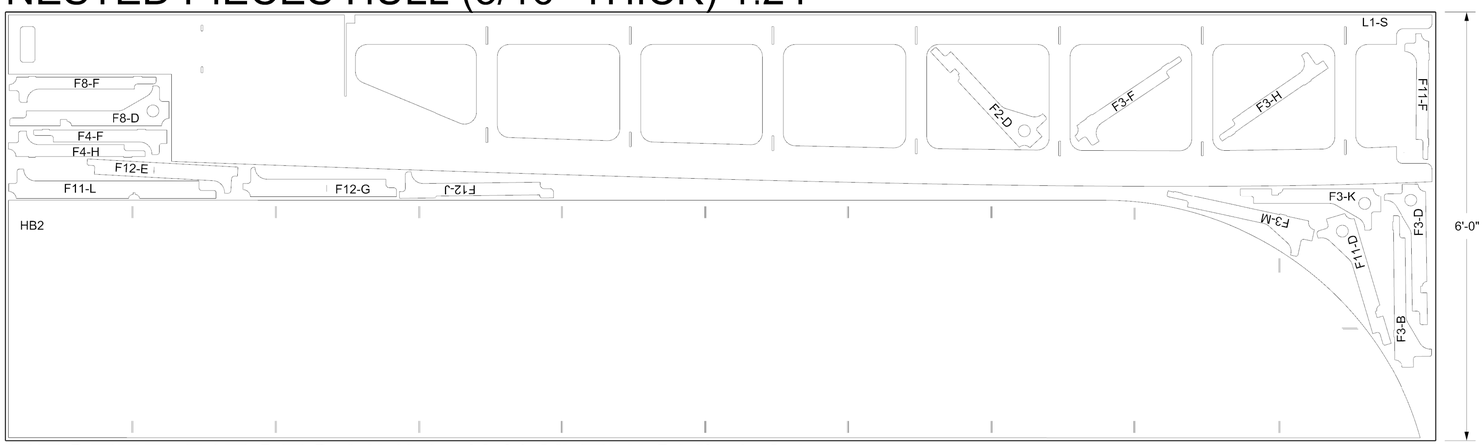

NESTED PIECES HULL (3/16" THICK) 1:24

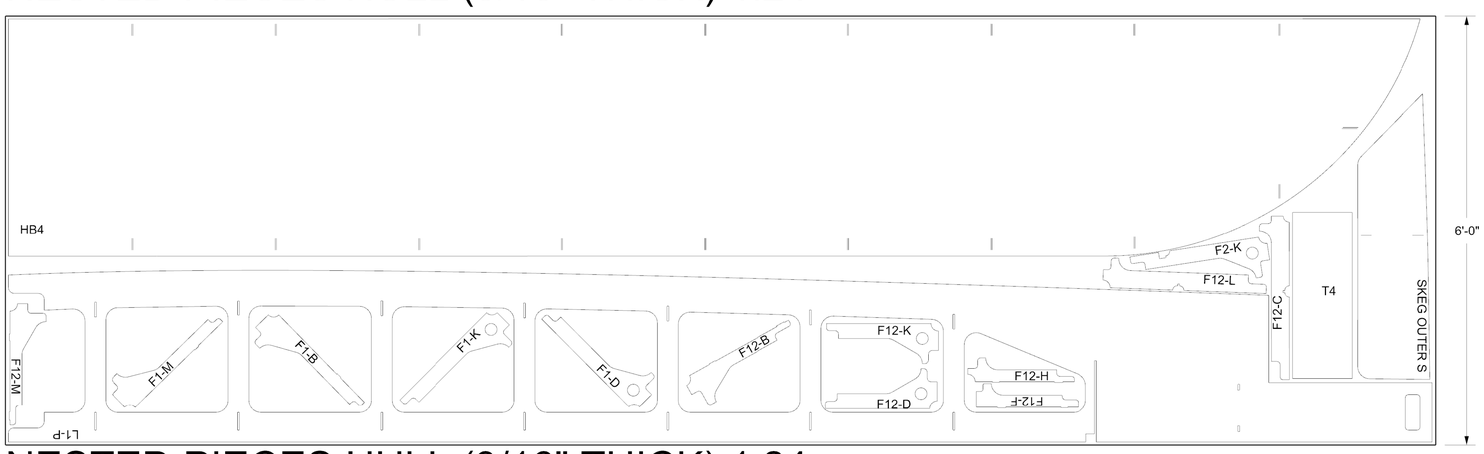

NESTED PIECES HULL (3/16" THICK) 1:24

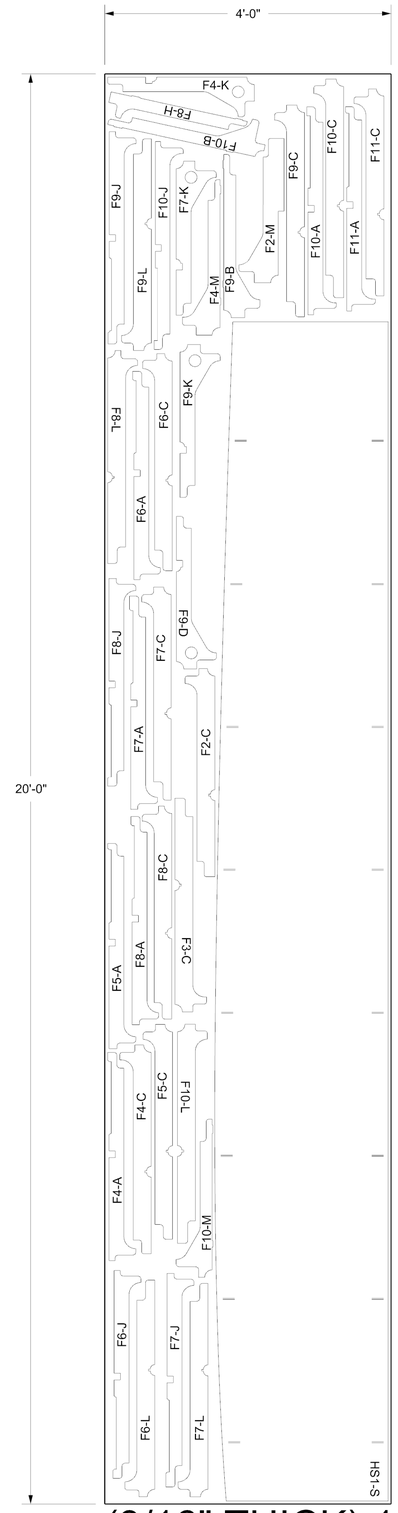

(3/16" THICK) 1:24

1 NESTING SHEETS 1:24

NOTE: ALL CUT FILES TO BE SUPPLIED TO WINNING BIDDER
NOTE: MUST BE COMPLETED TO THE SATISFACTION OF METALAB STUDIO (SEE SPECS)

NO.	ISSUE	DATE
1	ADDENDUM SET 1	1 September 2016

SAN ANTONIO RIVERBOATS
PROTOTYPE

[METALAB ARCHITECTURE]
20 N Sampson St
Houston, Texas 77003
713.426.3640
www.metalabstudio.com
info@metalabstudio.com
ARCHITECT

Gregory Nelson Design
(985) 515-1263
30004 Cantel Drive,
Ste A, Lacombe, Louisiana 70445
NAVAL ARCHITECT

SAR

SHEET SIZE: 12 X 18
SCALE AS NOTED

BID SET
NOT FOR CONSTRUCTION

NESTING SHEETS 2

H-13

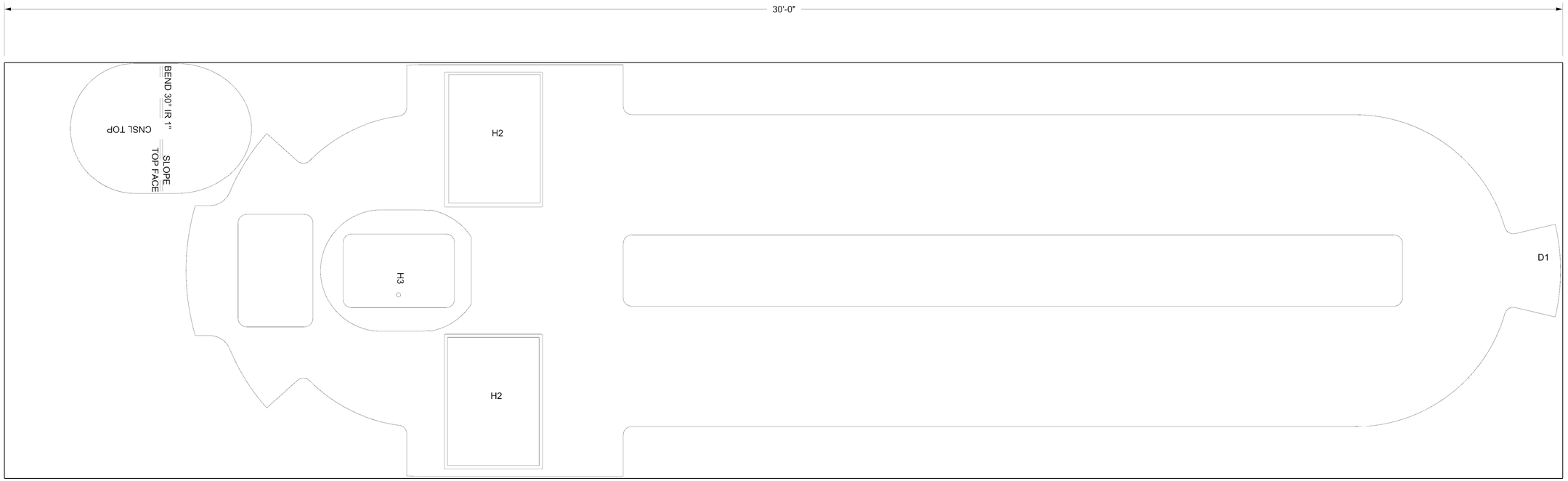

NESTED PIECES HULL (3/16" THICK) 1:24

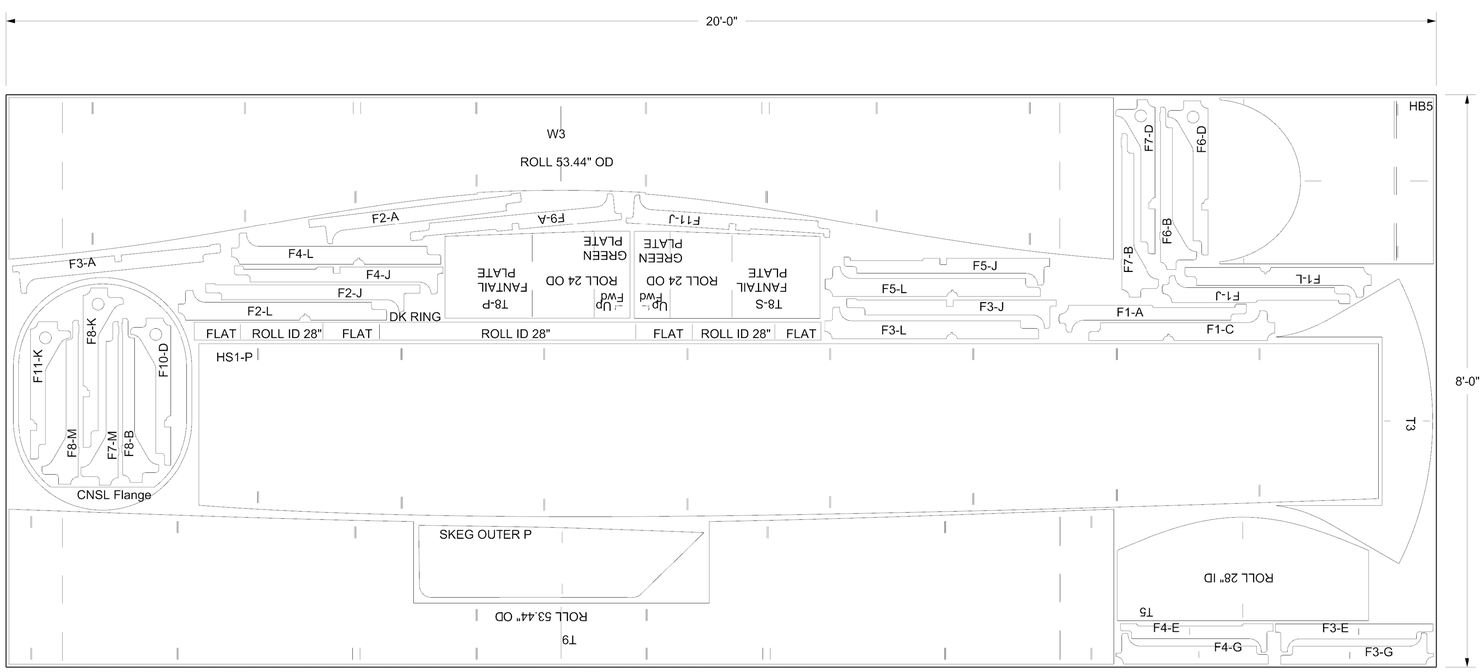

NESTED PIECES HULL (3/16" THICK) 1:24

1 NESTING SHEETS 1:24

NOTE: ALL CUT FILES TO BE SUPPLIED TO WINNING BIDDER
NOTE: MUST BE COMPLETED TO THE SATISFACTION OF METALAB STUDIO (SEE SPECS)

NO.	ISSUE	DATE
1	ADDENDUM SET 1	1 September 2016

SAN ANTONIO RIVERBOATS
PROTOTYPE

[METALAB ARCHITECTURE]
20 N Sampson St
Houston, Texas 77003
713.426.3640
www.metalabstudio.com
info@metalabstudio.com
ARCHITECT

Gerry Mann Design
(985) 515-2303
3004 Canal Drive
Mandeville, Louisiana 70448
NAVAL ARCHITECT

SAR

SCALE AS NOTED

SHEET SIZE: 12 X 18

BID SET
NOT FOR CONSTRUCTION

NESTING
SHEETS 3

H-14

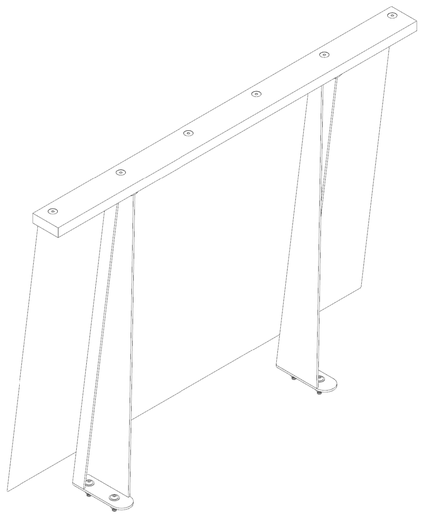

STRAIGHT RAIL X 8 (SEE R-6)
S-SERIES

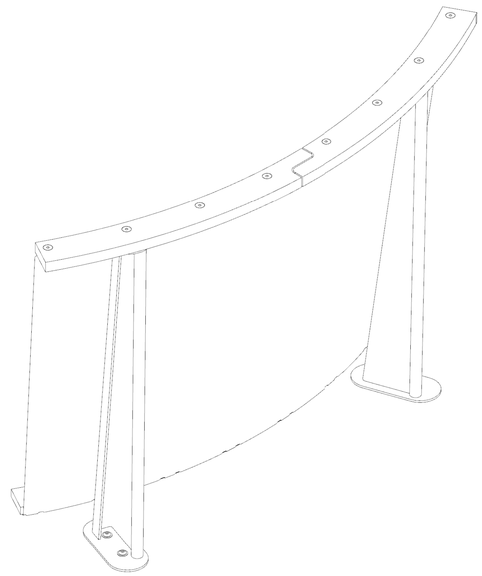

CURVED RAIL X 4 (SEE R-7)
C-SERIES

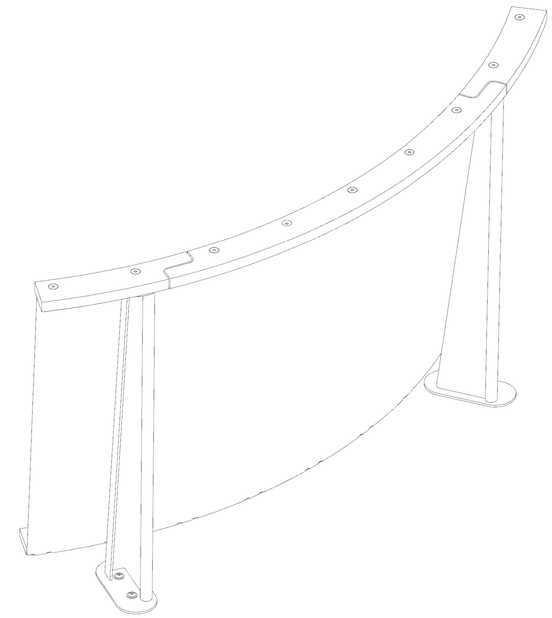

LONG CURVE DOOR RAIL X 2 (SEE R-8)
L-SERIES

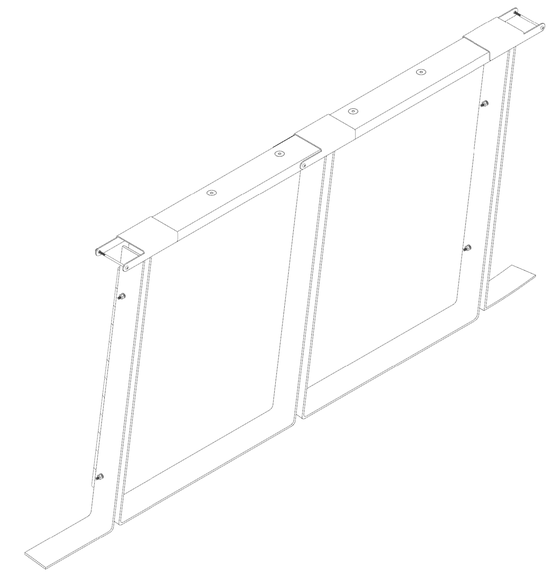

DOOR RAIL X 4 (SEE R-9)
D-SERIES

2 RAIL SCHEDULE

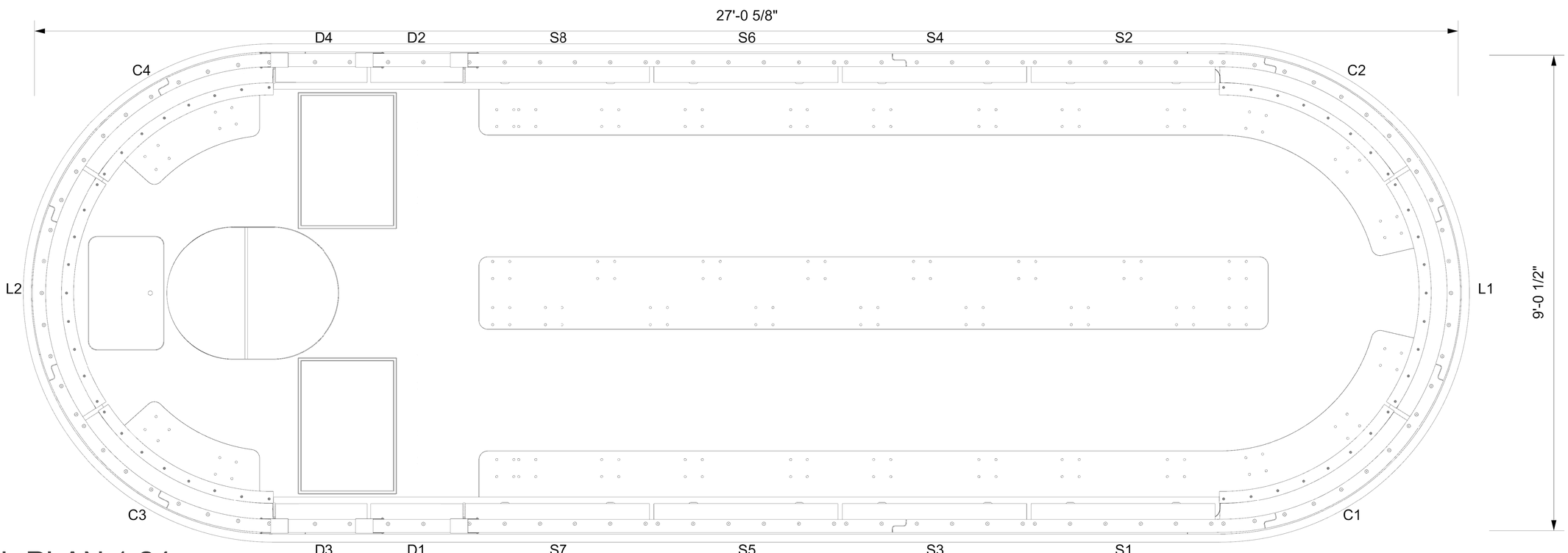

1 RAIL PLAN 1:24

NOTE: MUST BE COMPLETED TO THE SATISFACTION OF METALAB STUDIO (SEE SPECS)

NO.	ISSUE	DATE
1	ADDENDUM SET 1	14 September 2016

SAN ANTONIO RIVERBOATS
PROTOTYPE

[METALAB ARCHITECTURE]
20 N Sampson St
Houston, Texas 77003
713.426.3640
www.metalabstudio.com
info@metalabstudio.com

Gates Marine Design
(985) 515-2263
3004 Canal Drive
Slidell, Louisiana
Louisiana 70460
NAVAL ARCHITECT

SAR

BID SET
NOT FOR CONSTRUCTION

SHEET SIZE: 12 X 18
SCALE AS NOTED

RAIL PLAN AND
RAIL SCHEDULE

R-1

RAIL HARDWARE SCHEDULE

DRAWING	DESCRIPTION	# PER STRAIGHT PANEL	# PER CURVE PANEL	# PER LONG PANEL	# PER DOOR PANEL	TOTAL
	18-8 Stainless Steel Button Head Socket Cap Screw 3/8”-16 Thread 1 ½” long 92949A628	4	4	4	0	56
	18-8 Stainless Steel Split Lock Washer 3/8” Screw; 0.680” approx. OD 92146A031	80	46	26	12	166
	18-8 Stainless Steel Flat Washer 3/8” Screw; 0.875” approx. OD 92141A031	14	16	17	3	222
	18-8 Stainless Steel Nylon-Insert Nonmarring Flange Locknut 3/8”-16 Thread 91831A127	80	46	26	12	166
	18-8 Stainless Steel Flat Head Socket Cap Screw 3/8”-16 Thread 1 7/8” long 92210A631	6	8	9	3	110
	18-8 Stainless Steel Nylon-Insert Nonmarring Flange Locknut ¼”-20 Thread 91831A029	0	8	9	0	50
	18-8 Stainless Steel Flanged Button Head Socket Cap Screw ¼”-20 Thread, 1 1/2” Long 97654A355	0	8	9	0	50
	Oil-Resistant Buna-N Rubber Round Tube 36" Long, 1" OD, 3/8" ID Slit Open Long Ways 86805K23	2	2	2	0	28

NOTE: USE IRONTITE OR EQUAL ON ALL STAINLESS FASTENERS TO PREVENT SEIZING AND GALLING

DOOR HARDWARE SCHEDULE

DRAWING	DESCRIPTION	# PER DOOR PAIR	TOTAL
	18-8 Stainless Steel Spacer for #8 Screw OD ¼” 5/32” Long 92320A032	6	12
	18-8 Stainless Steel Nylon-Insert Nonmarring Flange Locknut #8-32 Thread 91831A009	3	6
	18-8 Stainless Steel Button Head Cap Screw #8-32 Thread 4” Long 91772A217	3	6
	Rubber Round Bumper 3/4" Dia, 3/8" Long 5/32" Hole 9540K863	4	8

DOOR HARDWARE SCHEDULE

DRAWING	DESCRIPTION	# PER DOOR PAIR	TOTAL
	18-8 Stainless Steel Nylon-Insert Nonmarring Flange Locknut #10-24 Thread 91831A011	8	16
	18-8 Stainless Steel Low Socket Cap Screw #10-24 Thread 1” Long 93615A360	8	16
	18-8 Stainless Steel Split Washer #10 Screw; 0.334” OD 92146A550	8	16
	18-8 Stainless Steel Flat Washer #10 Screw; 0.438” OD 92141A011	12	24

ITEMS FOR DOOR ASSEMBLY

FOR MORE INFORMATION SEE R-8

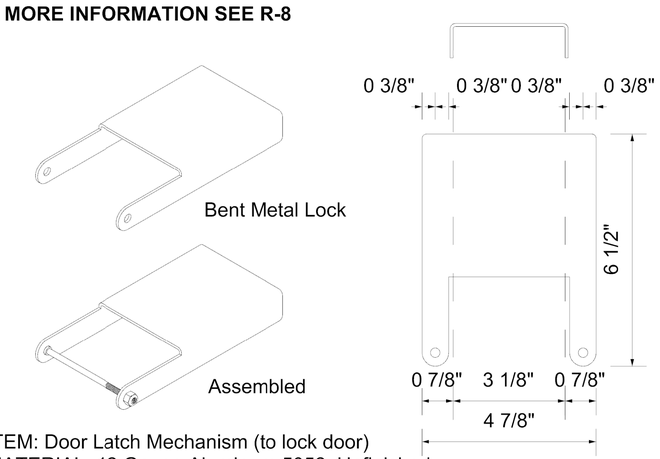

ITEM: Door Latch Mechanism (to lock door)
MATERIAL: 12 Gauge Aluminum 5052, Unfinished
AMT: 3 per Door Pair (6 total)
See Cut Sheet and Bending Pattern (Right)
Provide 0.25 radius rounded corner on flush end

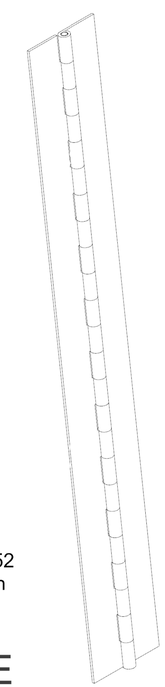

ITEM: Aluminum Piano Hinge for swinging door
DESCRIPTION: Aluminum 5052 .090" Thick; 3" Width, 2' Length
AMT: 2 per Door Pair (4 total)

1 RAIL HARDWARE SCHEDULE

2 DOOR DETAILS AND HARDWARE SCHEDULE

NO.	ISSUE	DATE
1	ADDENDUM SET 1	14 September 2016

SAN ANTONIO RIVERBOATS
PROTOTYPE

[METALAB ARCHITECTURE]
20 N Sampson St
Houston, Texas 77003
713.426.3640
www.metalabstudio.com
info@metalabstudio.com
ARCHITECT

Gwen Nolan Design
(985) 515-1263
3004 Canal Drive
New Orleans, LA
Louisiana 70130
NAVAL ARCHITECT

SAR

SHEET SIZE: 12 X 18
SCALE AS NOTED

BID SET
NOT FOR CONSTRUCTION

RAIL HARDWARE SCHEDULE AND DOOR DETAILS AND HARDWARE SCHEDULE

R-2

1/4" 316 STAINLESS STEEL
PAINT FINISH ONCE
ASSEMBLED
(SEE COLOR INDEX)
TOTAL 28 STANCHIONS
PER BOAT

14 LEFT, 14 RIGHT
2 PER PANEL EXCEPT
DOOR PANEL

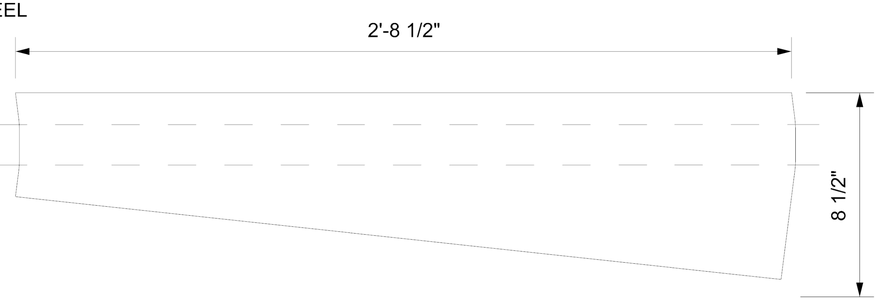

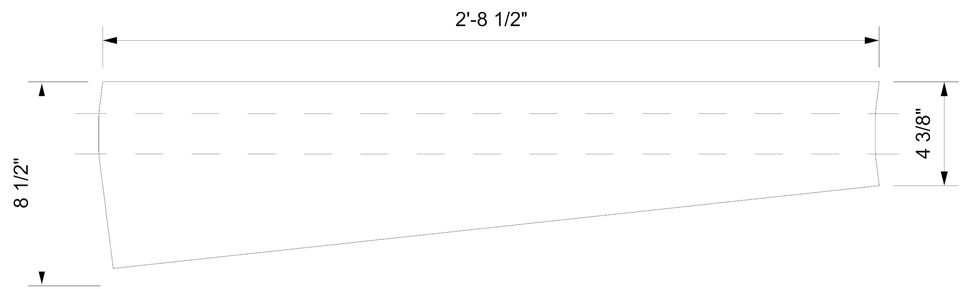

LEFT STANCHION

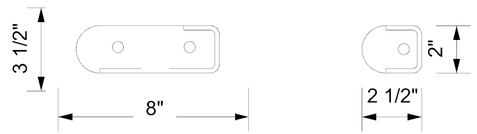

RIGHT STANCHION

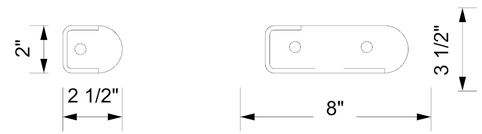

2 STANCHION PARTS 1:6

SEE R-4 FOR MORE
INFORMATION

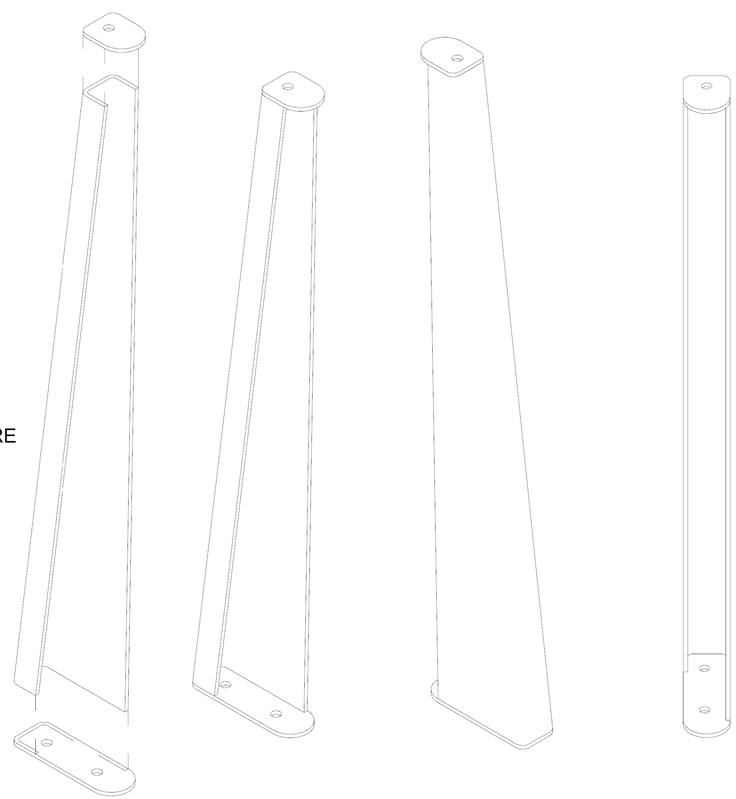

LEFT STANCHION

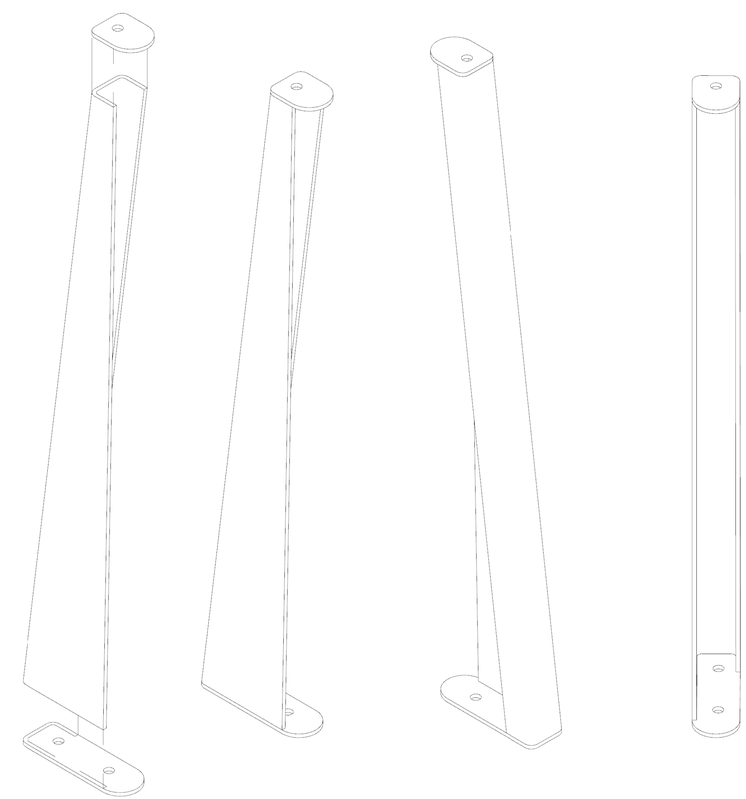

RIGHT STANCHION

1 RAIL STANCHION ASSEMBLY (FOR S, C, L-SERIES) 1:6

NOTE: ALL CUT FILES TO BE SUPPLIED TO WINNING BIDDER
NOTE: MUST BE COMPLETED TO THE SATISFACTION OF METALAB STUDIO (SEE SPECS)

NO.	ISSUE	DATE
1	ADDENDUM SET 1	14 September 2016

SAN ANTONIO RIVERBOATS
PROTOTYPE

[METALAB ARCHITECTURE]
20 N Sampson St
Houston, Texas 77003
713.426.3640
www.metalabstudio.com
info@metalabstudio.com
ARCHITECT

Gregory Nelson Design
(985) 515-1263
30004 Lamed Drive,
Ponchatoula, Hwy
Louisiana 70454
NAVAL ARCHITECT

SAR

BID SET
NOT FOR CONSTRUCTION

SCALE AS NOTED
SHEET SIZE: 12 X 18

RAIL STANCHION
ASSEMBLY
DRAWINGS

R-3

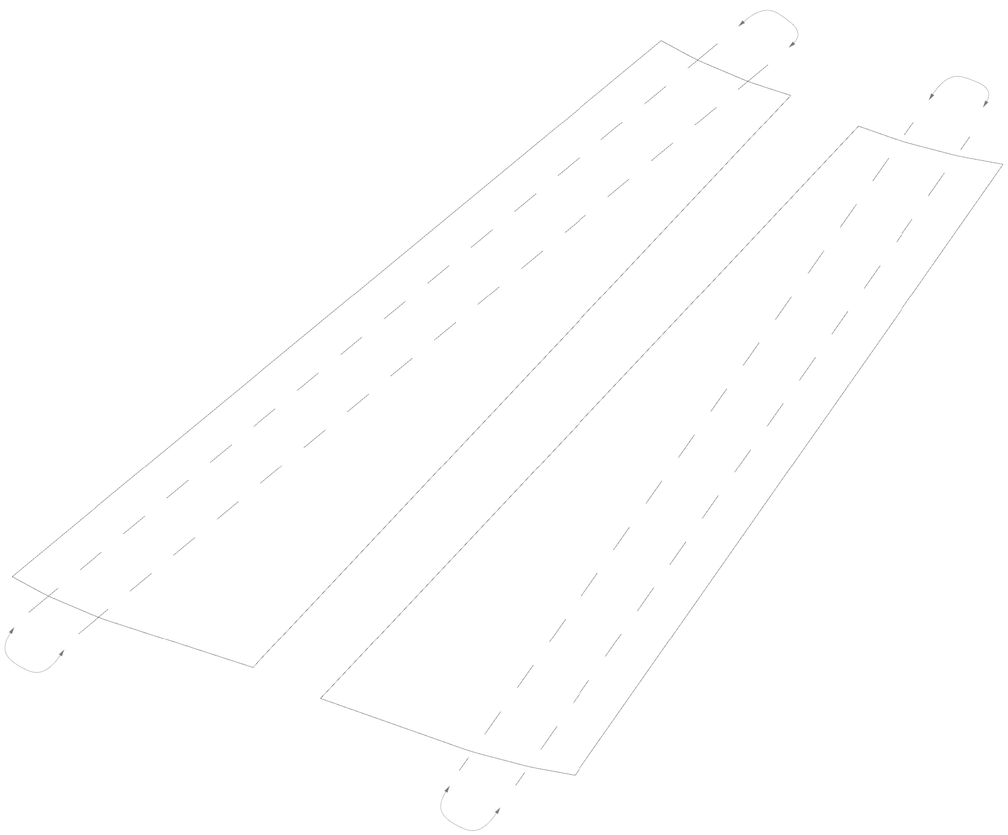

1/4" 316 STAINLESS STEEL TOTAL 28 STANCHIONS PER BOAT

PAINT FINISH ONCE ASSEMBLED TO RAIL PANELS (SEE COLOR INDEX)

14 LEFT, 14 RIGHT 2 PER PANEL EXCEPT DOOR PANEL

SEE R-3 FOR MORE INFORMATION

NOTE: ALL CUT FILES TO BE SUPPLIED TO WINNING BIDDER
NOTE: MUST BE COMPLETED TO THE SATISFACTION OF METALAB STUDIO (SEE SPECS)

1 BENDING DETAIL FOR STANCHION

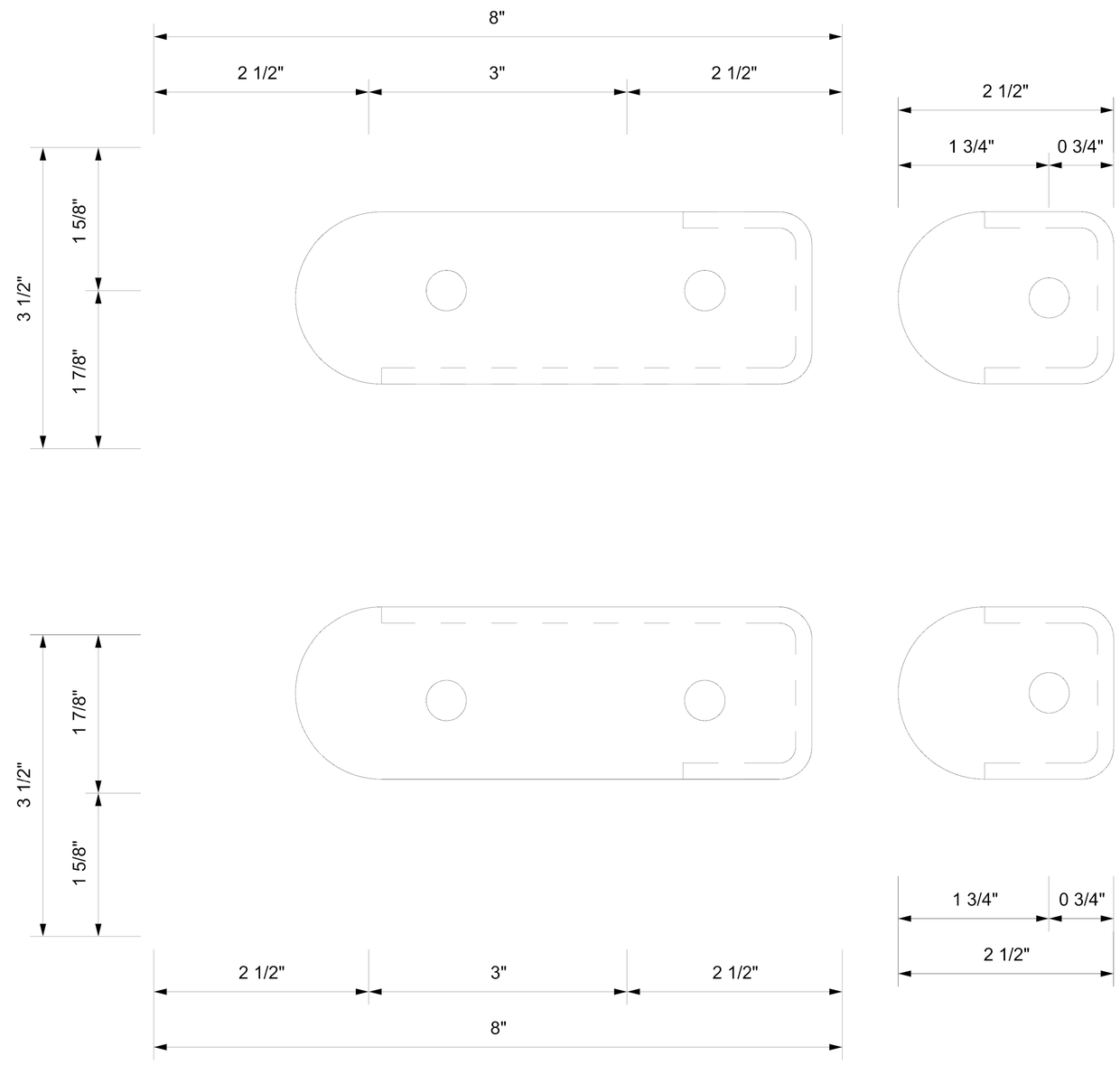

NOTE: ALL CUT FILES TO BE SUPPLIED TO WINNING BIDDER
NOTE: MUST BE COMPLETED TO THE SATISFACTION OF METALAB STUDIO (SEE SPECS)

2 STANCHION BASE AND TOP DETAILS 1:1.5

NO.	ISSUE	DATE
1	ADDENDUM SET 1	14 September 2016

SAN ANTONIO RIVERBOATS
PROTOTYPE

[METALAB ARCHITECTURE]
20 N Sampson St
Houston, Texas 77003
713.426.3640
www.metalabstudio.com
info@metalabstudio.com
ARCHITECT

Gaspe Nelson Design
(985) 515-1263
3004 Canal Drive
New Orleans, Louisiana 70119
NAVAL ARCHITECT

SAR

BID SET
NOT FOR CONSTRUCTION

SCALE AS NOTED

SHEET SIZE: 12 X 18

RAIL STANCHION DETAILS

R-4

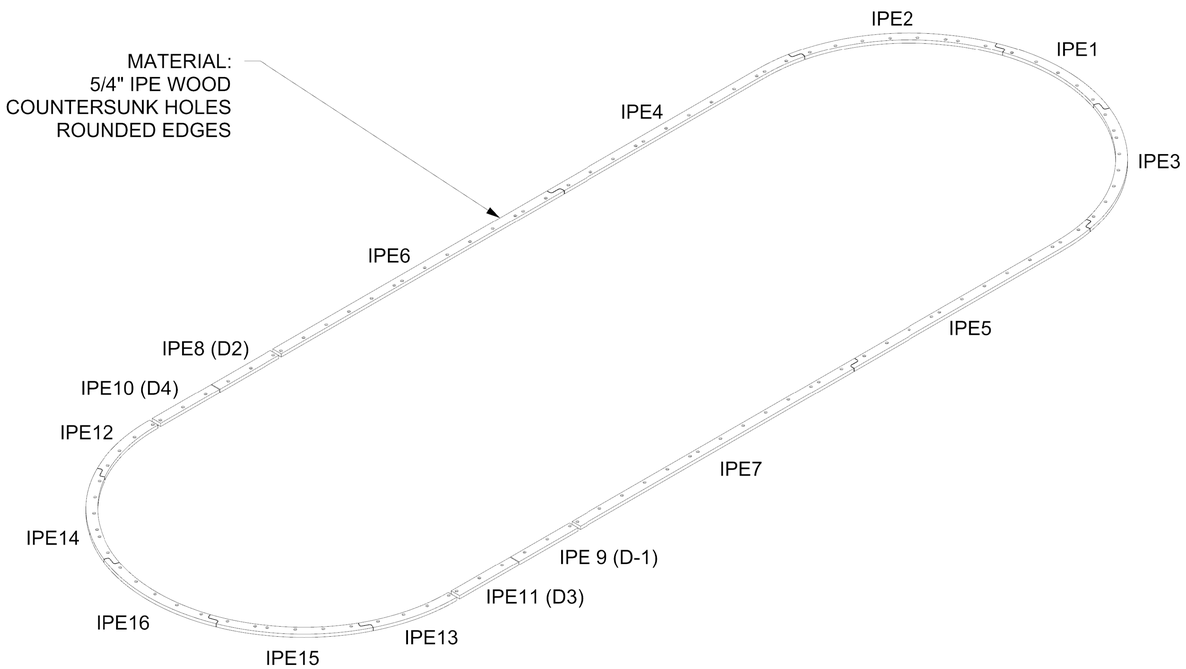

2 RAIL AXONOMETRIC

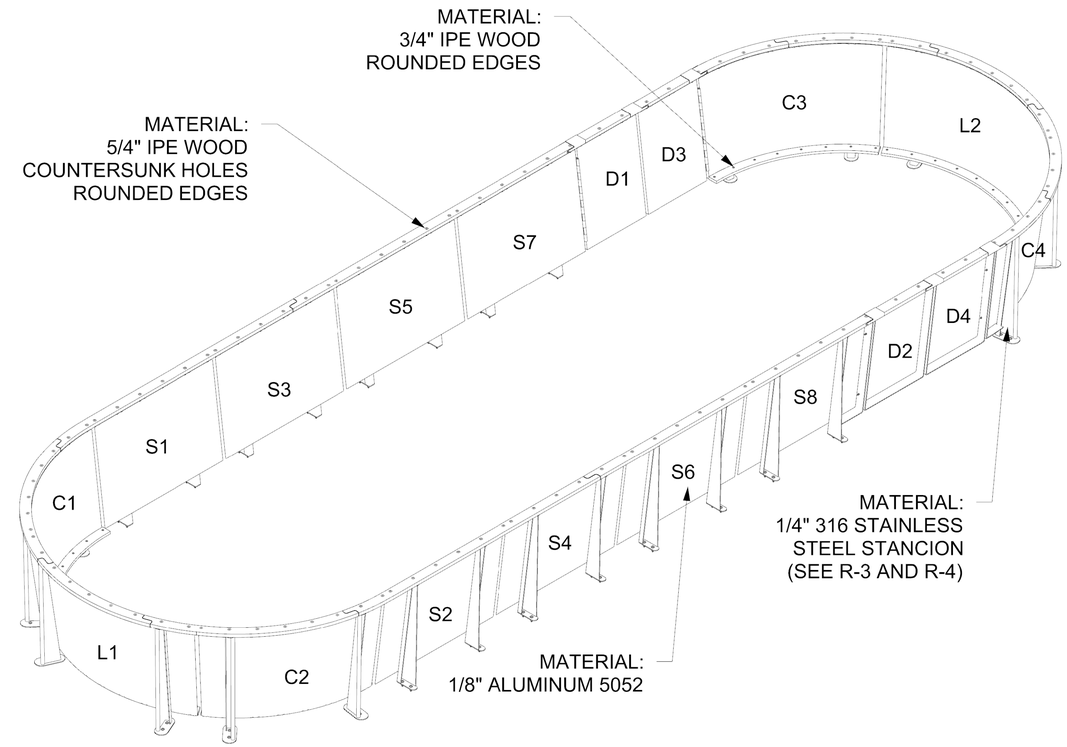

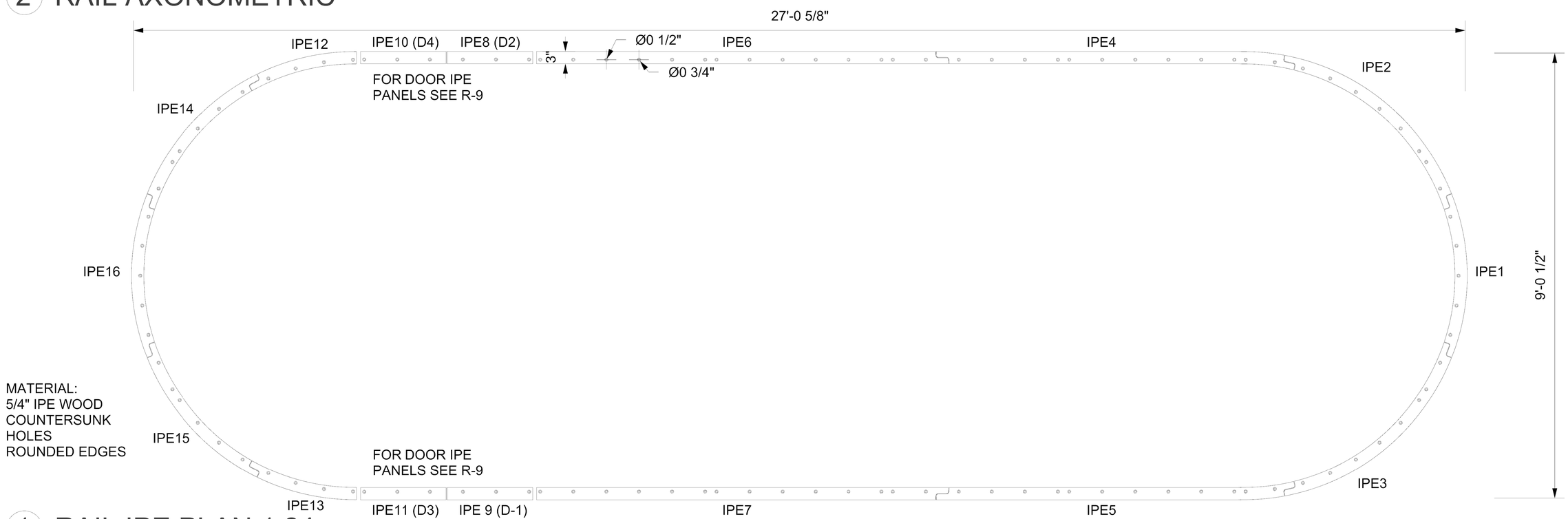

1 RAIL IPE PLAN 1:24

NOTE: ALL CUT FILES TO BE SUPPLIED TO WINNING BIDDER
NOTE: MUST BE COMPLETED TO THE SATISFACTION OF METALAB STUDIO (SEE SPECS)

NO.	ISSUE	DATE
1	ADDENDUM SET 1	15 September 2016

SAN ANTONIO RIVERBOATS
PROTOTYPE

[METALAB ARCHITECTURE]
20 N Sampson St
Houston, Texas 77003
713.426.3640
www.metalabstudio.com
info@metalabstudio.com
ARCHITECT

Gaspe Nelson Design
(985) 515-2303
3004 Canal Drive
Metairie, Louisiana 70006
Louisiana 70506
NAVAL ARCHITECT

SAR

BID SET
NOT FOR CONSTRUCTION

SHEET SIZE: 12 X 18
SCALE AS NOTED

RAIL IPE PLAN
AND DETAILS

R-5

MATERIAL:
3/16" ALUMINUM
5052
PAINT FINISH
ONCE ASSEMBLED
(SEE COLOR INDEX)

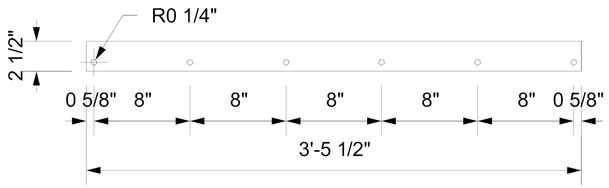

2 GUARDRAILS (S-SERIES) 1:12

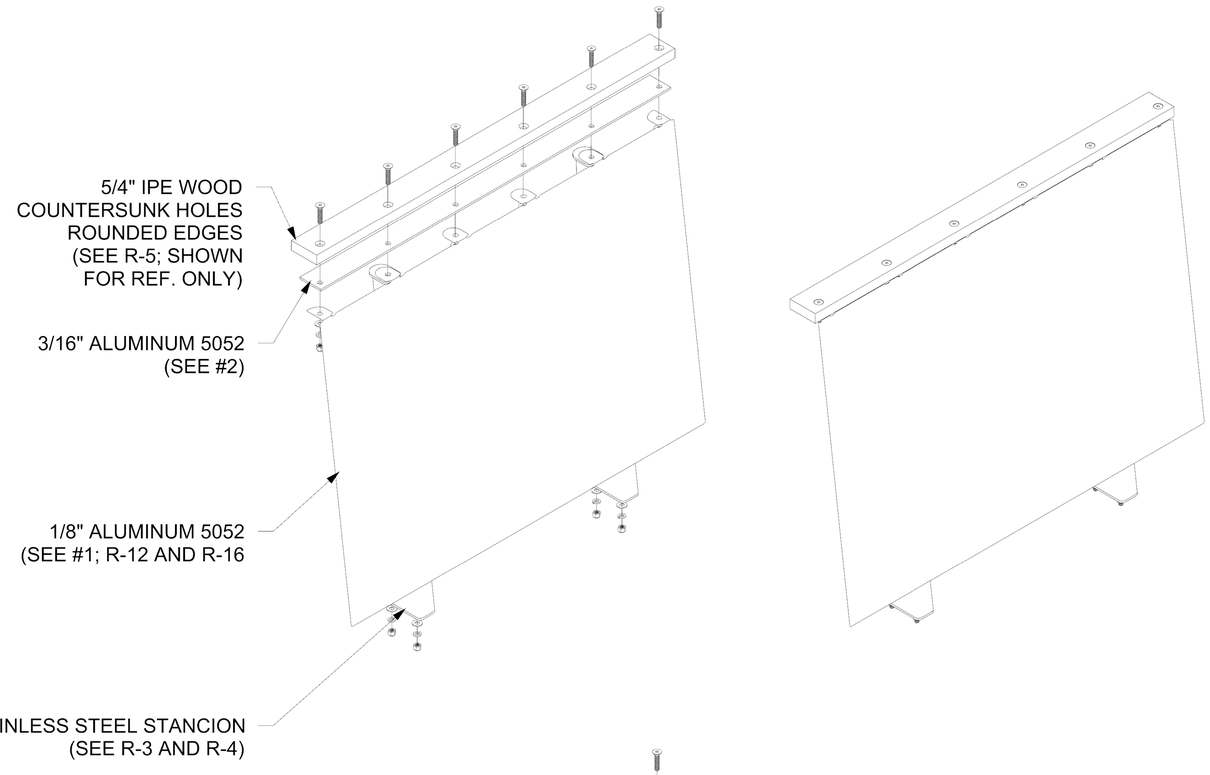

MATERIAL:
1/8" ALUMINUM
5052
WATERJET CUT
PAINT FINISH
ONCE ASSEMBLED
(SEE COLOR INDEX)

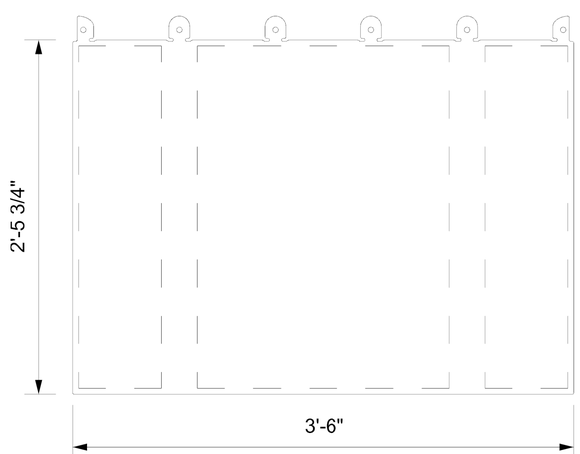

FOR ARTBOARD SEE R-12
FOR SAMPLE SEE R-16

1 RAIL PANEL (S-SERIES) 1:12

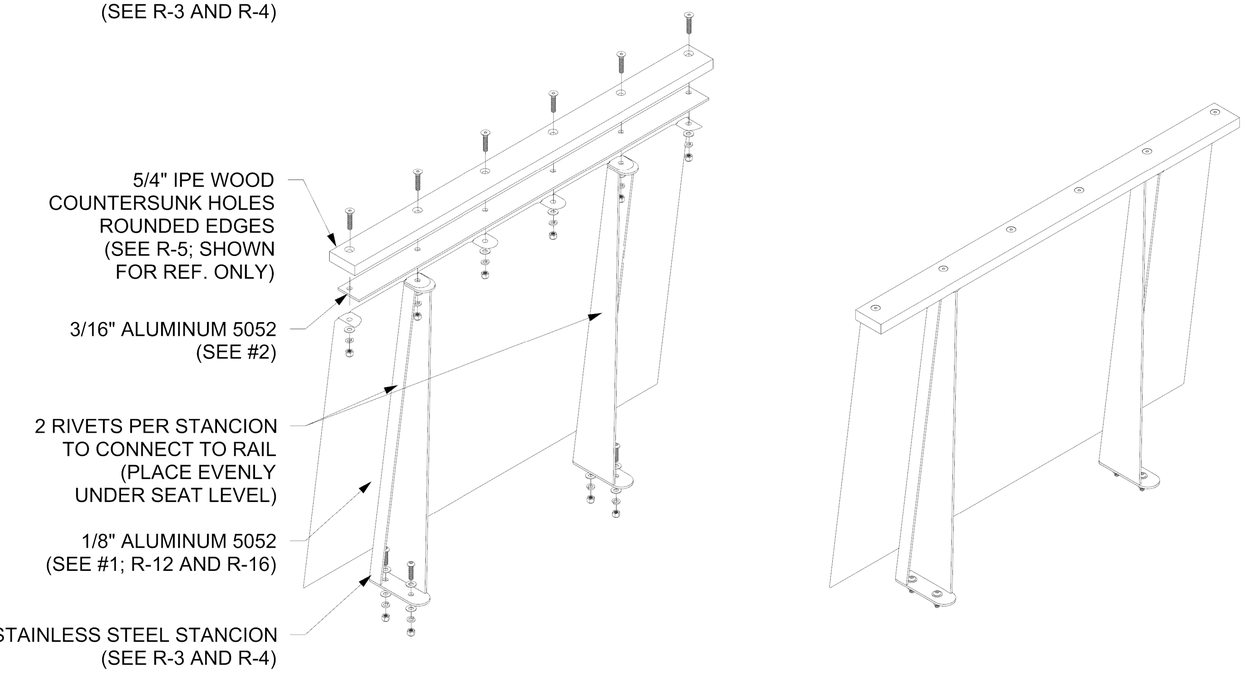

3 RAIL ASSEMBLY (S-SERIES) 1:12

NOTE: ALL CUT FILES TO BE SUPPLIED TO WINNING BIDDER
NOTE: MUST BE COMPLETED TO THE SATISFACTION OF METALAB STUDIO (SEE SPECS)

NO.	ISSUE	DATE
1	ADDENDUM SET 1	14 September 2016

SAN ANTONIO RIVERBOATS
PROTOTYPE

[METALAB ARCHITECTURE]
20 N Sampson St
Houston, Texas 77003
713.426.3640
www.metalabstudio.com
info@metalabstudio.com
ARCHITECT

Gates Marine Design
(985) 515-2263
3004 Canal Drive
Metairie, LA 70001
Louisiana 70506
NAVAL ARCHITECT

SAR

SHEET SIZE: 12 X 18
SCALE AS NOTED

BID SET
NOT FOR CONSTRUCTION

RAIL ASSEMBLY
DRAWINGS 1
S-SERIES

R-6

MATERIAL:
3/4" IPE WOOD
ROUNDED EDGES

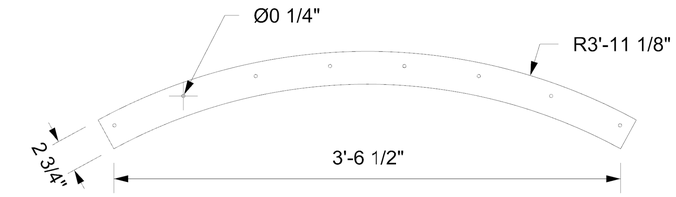

MATERIAL:
3/16" ALUMINUM
5052
PAINT FINISH
ONCE ASSEMBLED
(SEE COLOR INDEX)

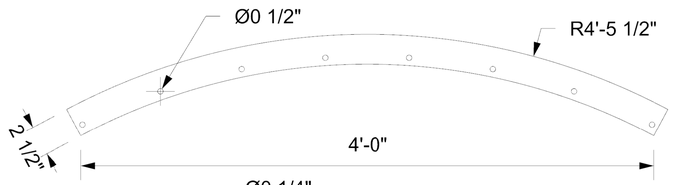

MATERIAL:
3/16" ALUMINUM
5052
PAINT FINISH
ONCE ASSEMBLED
(SEE COLOR INDEX)

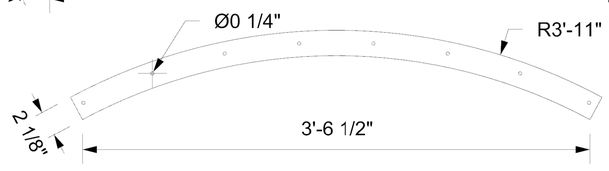

2 GUARDRAILS (C-SERIES) 1:12

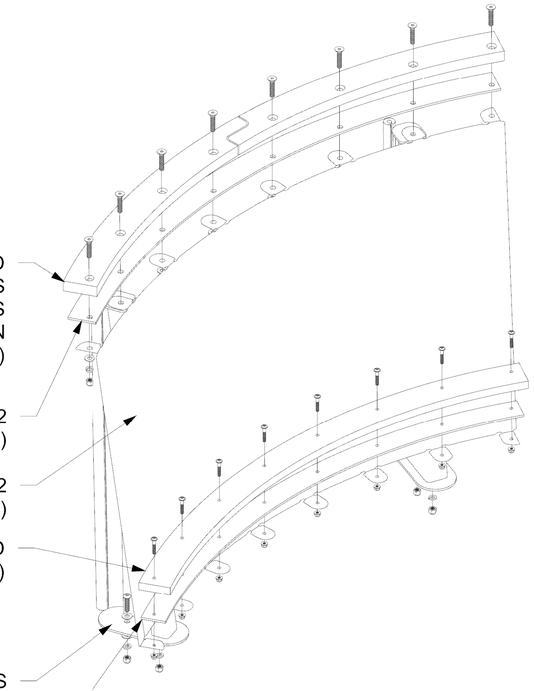

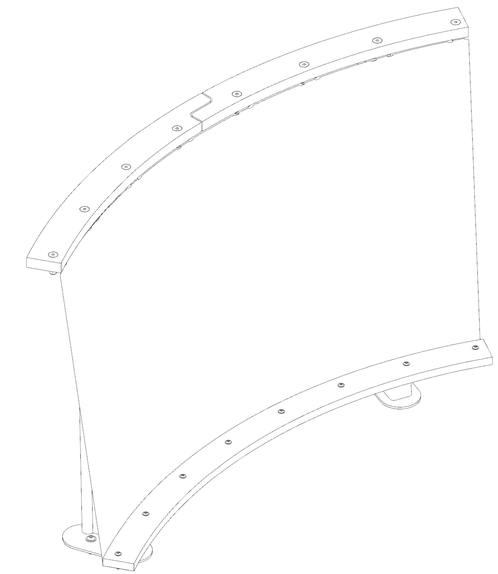

MATERIAL:
1/8" ALUMINUM
5052
WATERJET CUT
PAINT FINISH
ONCE ASSEMBLED
(SEE COLOR INDEX)

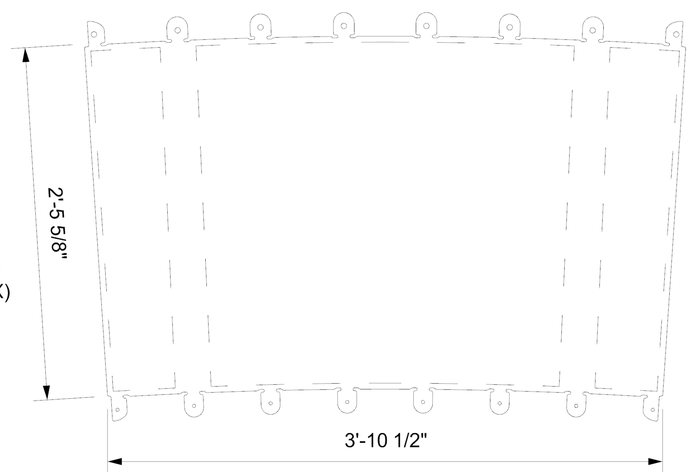

FOR ARTBOARD SEE R-13
FOR SAMPLE SEE R-17

1 RAIL PANEL (C-SERIES) 1:12

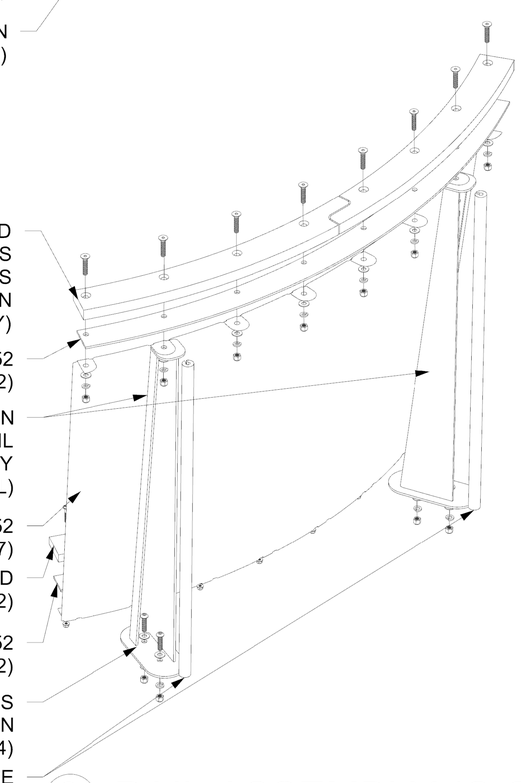

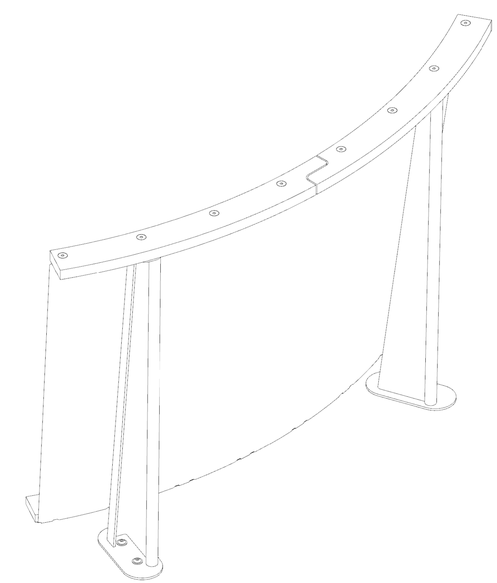

3 RAIL ASSEMBLY (C-SERIES) 1:12

NOTE: ALL CUT FILES TO BE
SUPPLIED TO WINNING BIDDER
NOTE: MUST BE COMPLETED
TO THE SATISFACTION OF
METALAB STUDIO (SEE SPECS)

NO.	ISSUE	DATE
1	ADDENDUM SET 1	14 September 2016

SAN ANTONIO RIVERBOATS
PROTOTYPE

[METALAB ARCHITECTURE]
20 N Sampson St
Houston, Texas 77003
713.426.3640
www.metalabstudio.com
info@metalabstudio.com
ARCHITECT

Gaston Nelson Design
(985) 515-1263
3004 Canal Drive
New Orleans, Louisiana 70119
NAVAL ARCHITECT

SAR

BID SET
NOT FOR CONSTRUCTION

SHEET SIZE: 12 X 18
SCALE AS NOTED

RAIL ASSEMBLY
DRAWINGS 2
C-SERIES

R-7

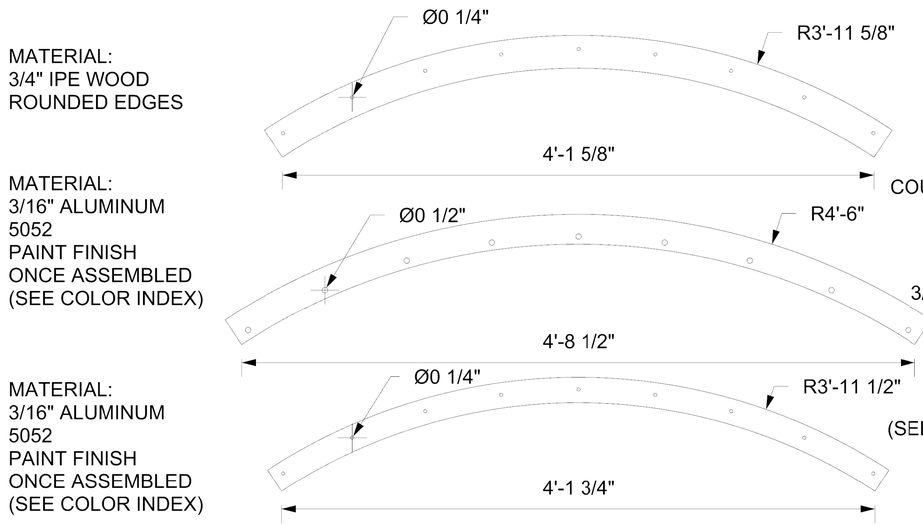

2 GUARDRAILS (L-SERIES) 1:12

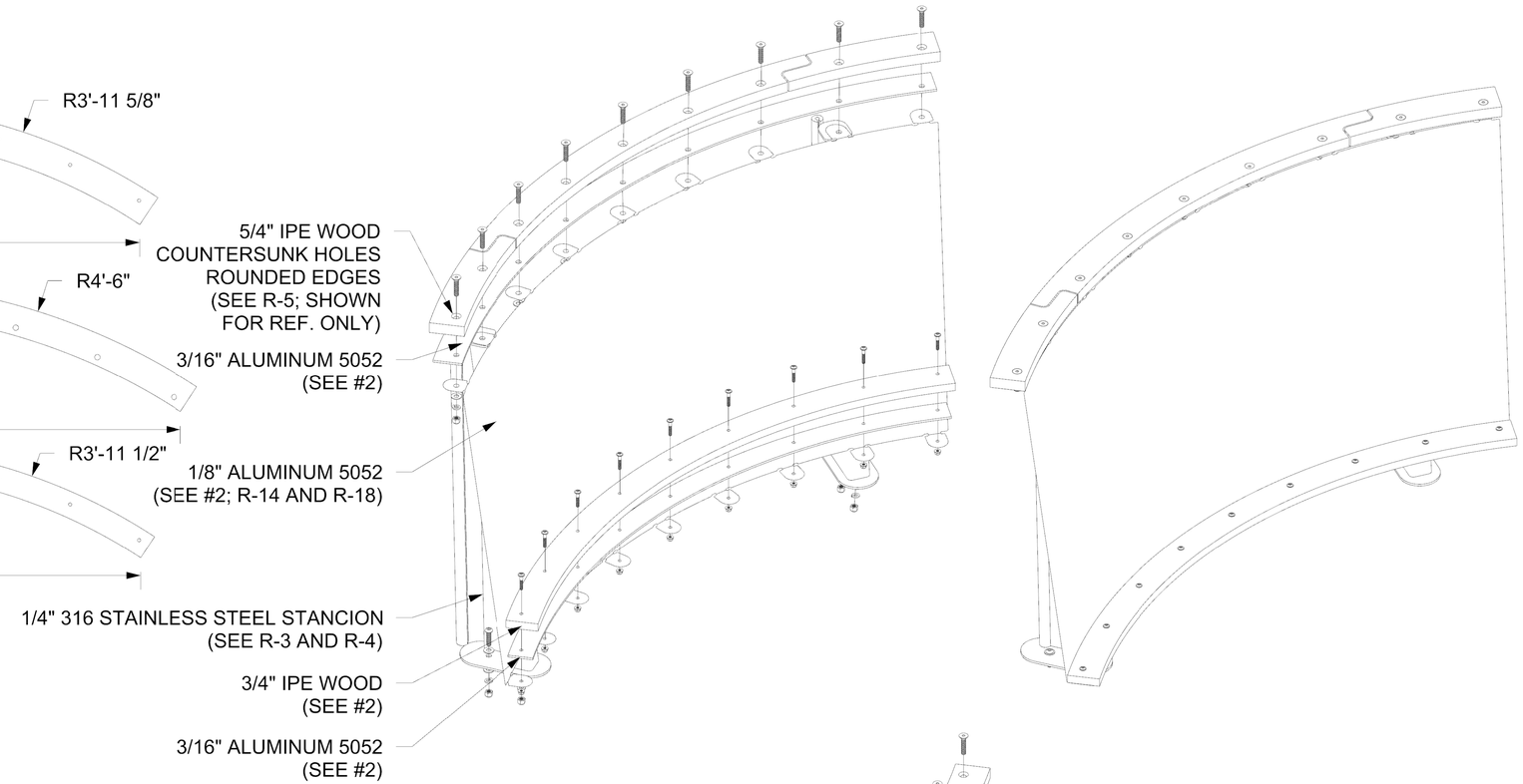

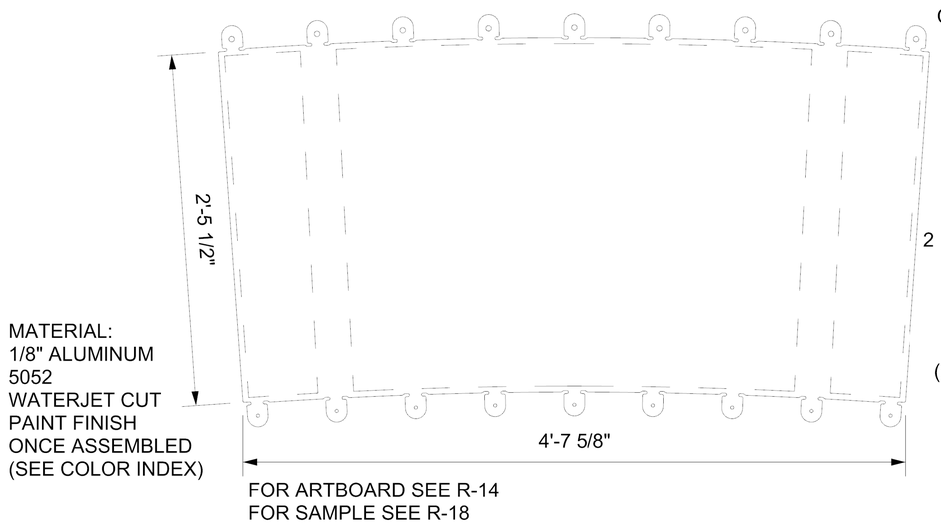

1 RAIL PANEL (L-SERIES) 1:12

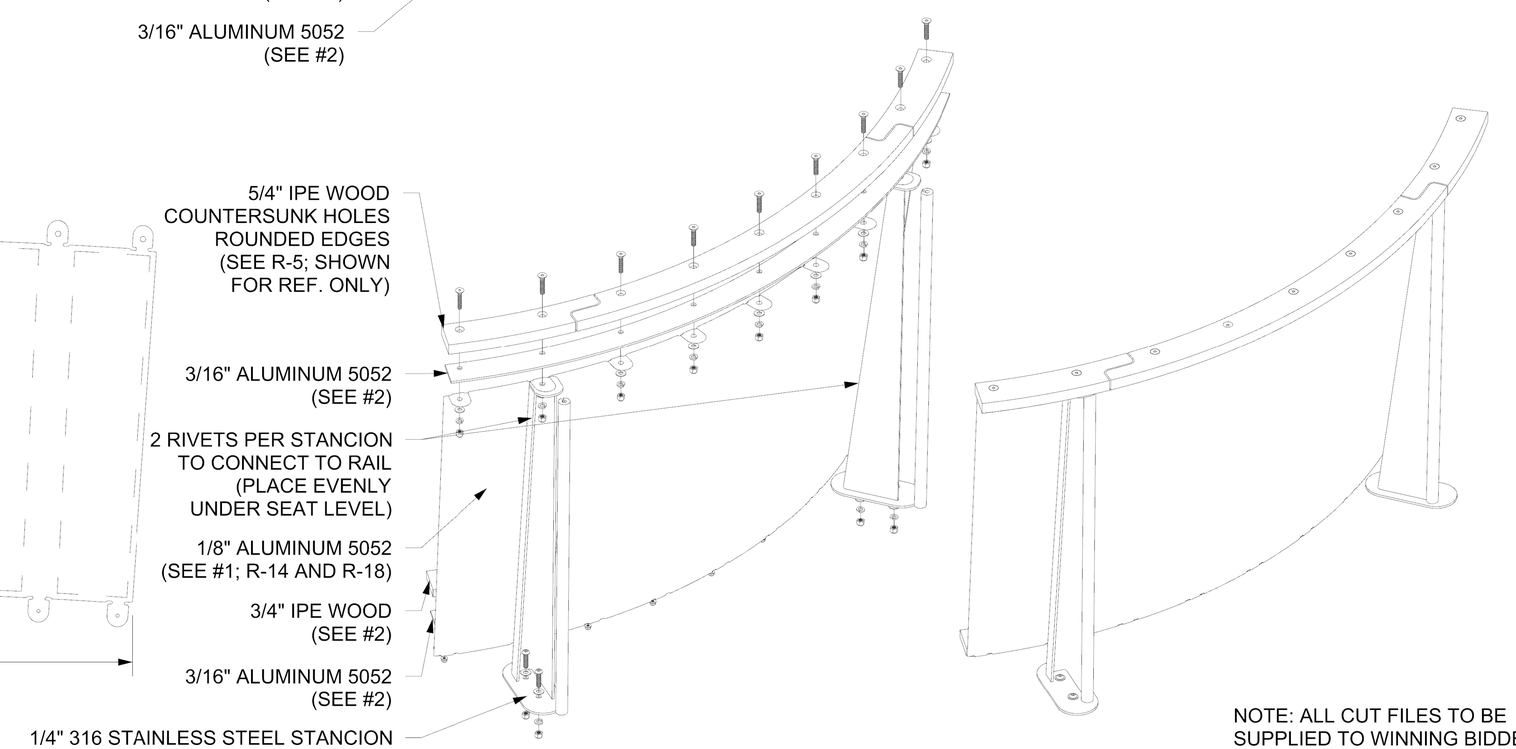

3 RAIL ASSEMBLY (L-SERIES) 1:12

NOTE: ALL CUT FILES TO BE SUPPLIED TO WINNING BIDDER
NOTE: MUST BE COMPLETED TO THE SATISFACTION OF METALAB STUDIO (SEE SPECS)

NO.	ISSUE	DATE
1	ADDENDUM SET 1	14 September 2016

SAN ANTONIO RIVERBOATS
PROTOTYPE

[METALAB ARCHITECTURE]
20 N Sampson St
Houston, Texas 77003
713.426.3640
www.metalabstudio.com
info@metalabstudio.com
ARCHITECT

Gossy Ahrens Design
(985) 515-2263
3004 Canal Drive
New Orleans, Louisiana 70119
NAVAL ARCHITECT

SAR

SHEET SIZE: 12 X 18
SCALE AS NOTED

BID SET
NOT FOR CONSTRUCTION

RAIL ASSEMBLY
DRAWINGS 3
L-SERIES

R-8

FOR HARDWARE AND DETAILS FOR DOOR LATCHING, SEE R-2
FOR OPENING AND CLOSING OF DOOR, SEE R-10 AND R-11

MATERIAL:
5/4" IPE WOOD
COUNTERSUNK
HOLES
ROUNDED EDGES

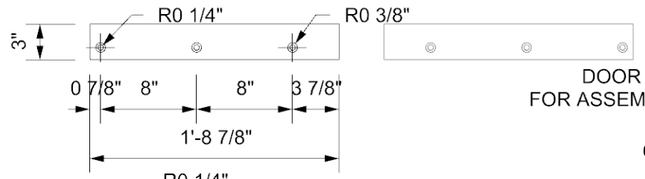

MATERIAL:
3/16" ALUMINUM
5052
PAINT FINISH
ONCE ASSEMBLED
(SEE COLOR INDEX)

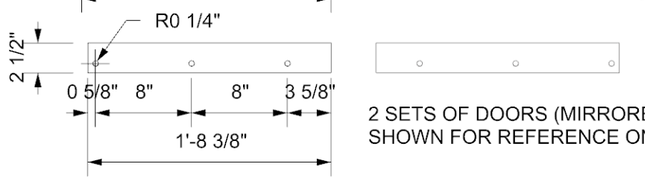

2 SETS OF DOORS (MIRRORED,
SHOWN FOR REFERENCE ONLY)

3 GUARDRAILS (D-SERIES) 1:12

MATERIAL:
3/16" ALUMINUM
5052
PAINT FINISH
ONCE ASSEMBLED
(SEE COLOR INDEX)
ONE PER DOOR

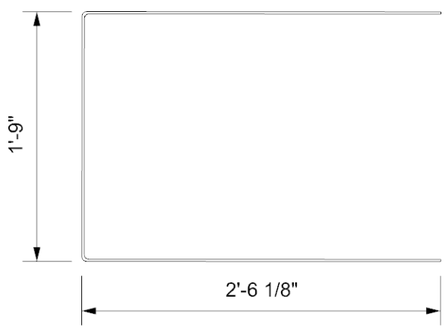

2 DOOR STIFFENER (D-SERIES) 1:12

MATERIAL:
1/8" ALUMINUM
5052
WATERJET CUT
PAINT FINISH
ONCE ASSEMBLED
(SEE COLOR INDEX)

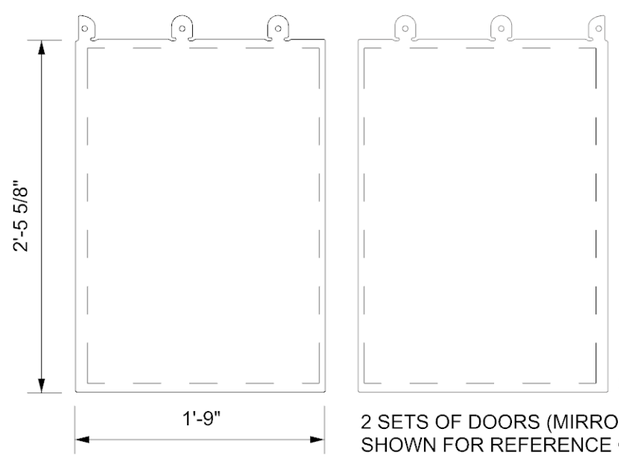

2 SETS OF DOORS (MIRRORED,
SHOWN FOR REFERENCE ONLY)

FOR ARTBOARD SEE R-15
FOR SAMPLE SEE R-19

1 RAIL PANEL (D-SERIES) 1:12

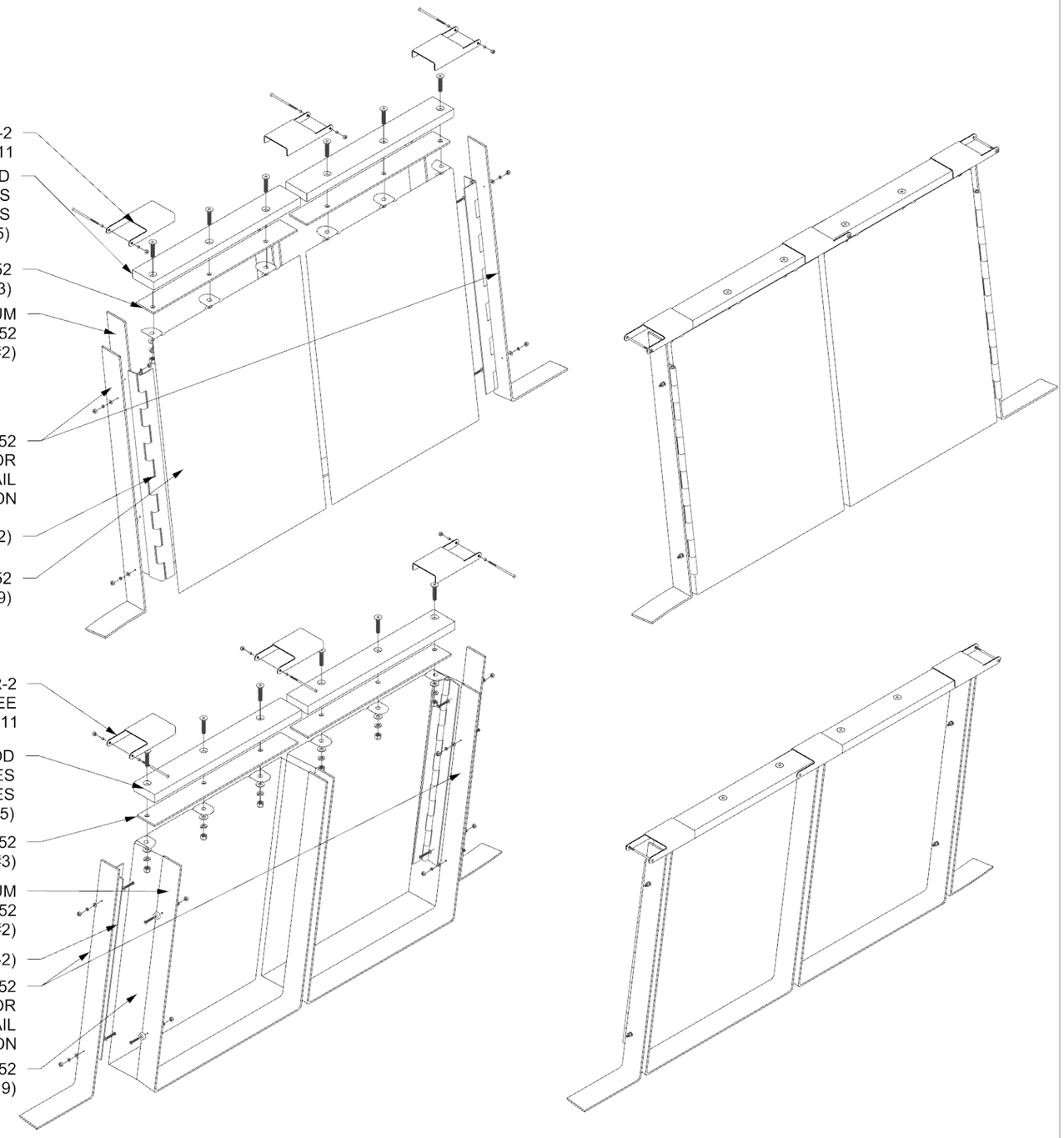

4 RAIL ASSEMBLY (D-SERIES) 1:12

NOTE: ALL CUT FILES TO BE
SUPPLIED TO WINNING BIDDER
NOTE: MUST BE COMPLETED
TO THE SATISFACTION OF
METALAB STUDIO (SEE SPECS)

NO.	ISSUE	DATE
1	ADDENDUM SET 1	1 September 2016

SAN ANTONIO RIVERBOATS
PROTOTYPE

[METALAB ARCHITECTURE]
20 N Sampson St
Houston, Texas 77003
713.426.3640
www.metalabstudio.com
info@metalabstudio.com
ARCHITECT

Grand Prairie Design Group, Inc.
1004 Cantu Drive
Lancaster, Texas 75146
NAVAL ARCHITECT

SAR

SHEET SIZE: 12 X 18
SCALE AS NOTED

BID SET
NOT FOR CONSTRUCTION

RAIL ASSEMBLY
DRAWINGS 4
D-SERIES

R-9

FOR DOOR LATCH, SEE R-2
FOR DOOR ASSEMBLY, SEE R-9

FOR HINGE DETAILS, SEE R-2

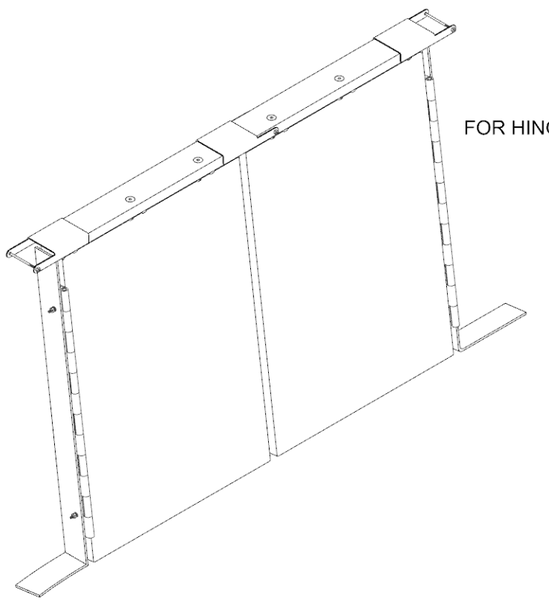

DOOR COMPONENT

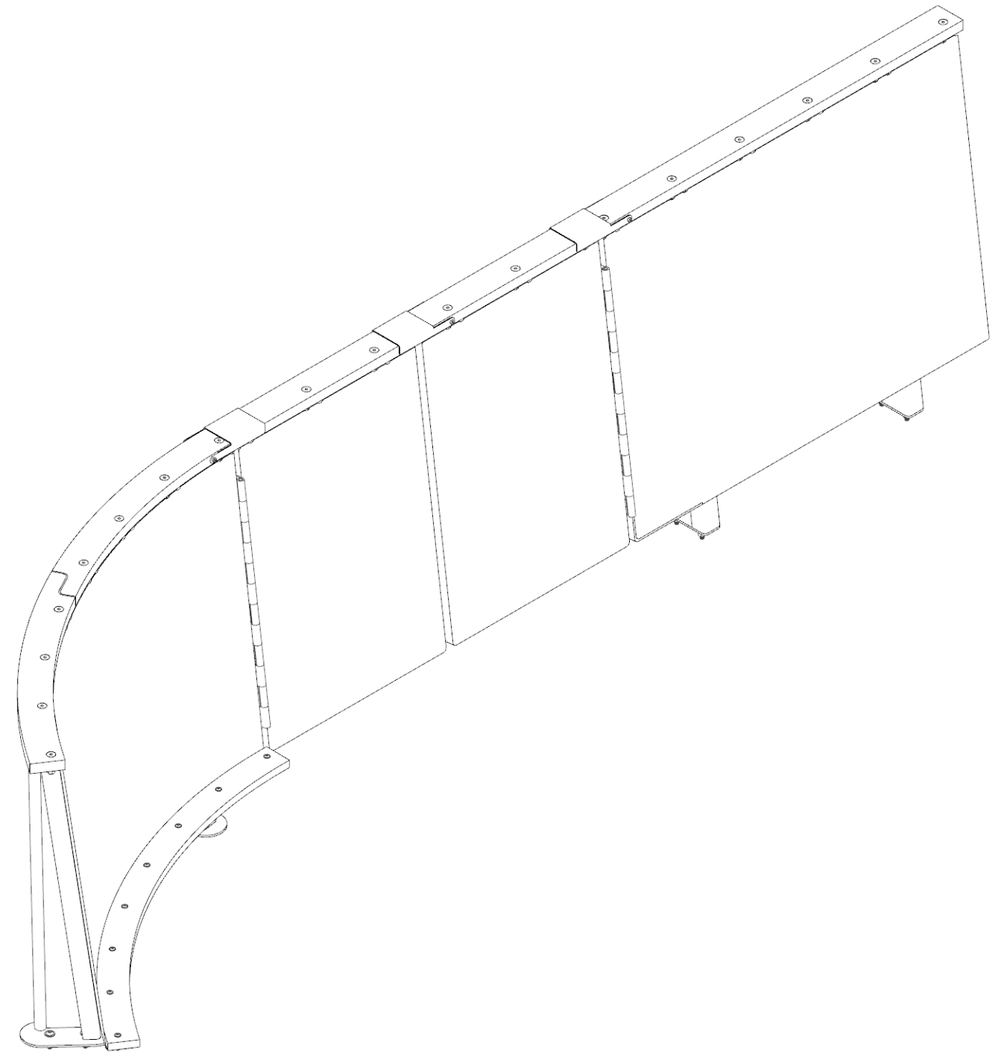

CLOSED AND LATCHED DOOR

1 DOOR LATCHING MECHANISM 1 (D-SERIES)

NOTE: MUST BE COMPLETED TO THE SATISFACTION OF METALAB STUDIO (SEE SPECS)

NO.	ISSUE	DATE
1	ADDENDUM SET 1	1 September 2016

SAN ANTONIO RIVERBOATS
PROTOTYPE

[METALAB ARCHITECTURE]
20 N Sampson St
Houston, Texas 77003
713.426.3640
www.metalabstudio.com
info@metalabstudio.com
ARCHITECT

Gensler Texas Design Studio, P.C.
1500 Lamar Drive, Houston, Texas 77010
NAVAL ARCHITECT

SAR

SHEET SIZE: 12 X 18
SCALE AS NOTED

BID SET
NOT FOR CONSTRUCTION

RAIL DOOR LOCKING MECHANISM 1 D-SERIES

R-10

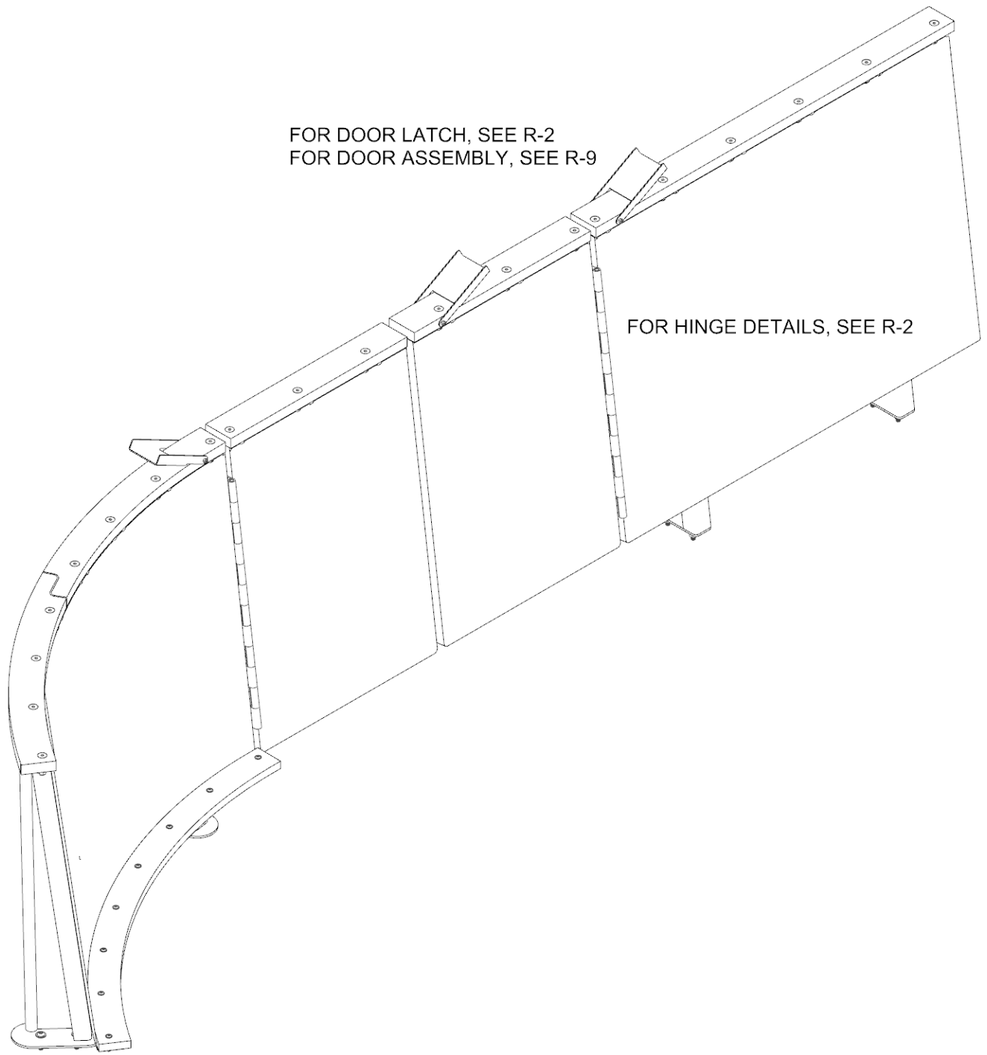

CLOSED AND UNLATCHED DOOR

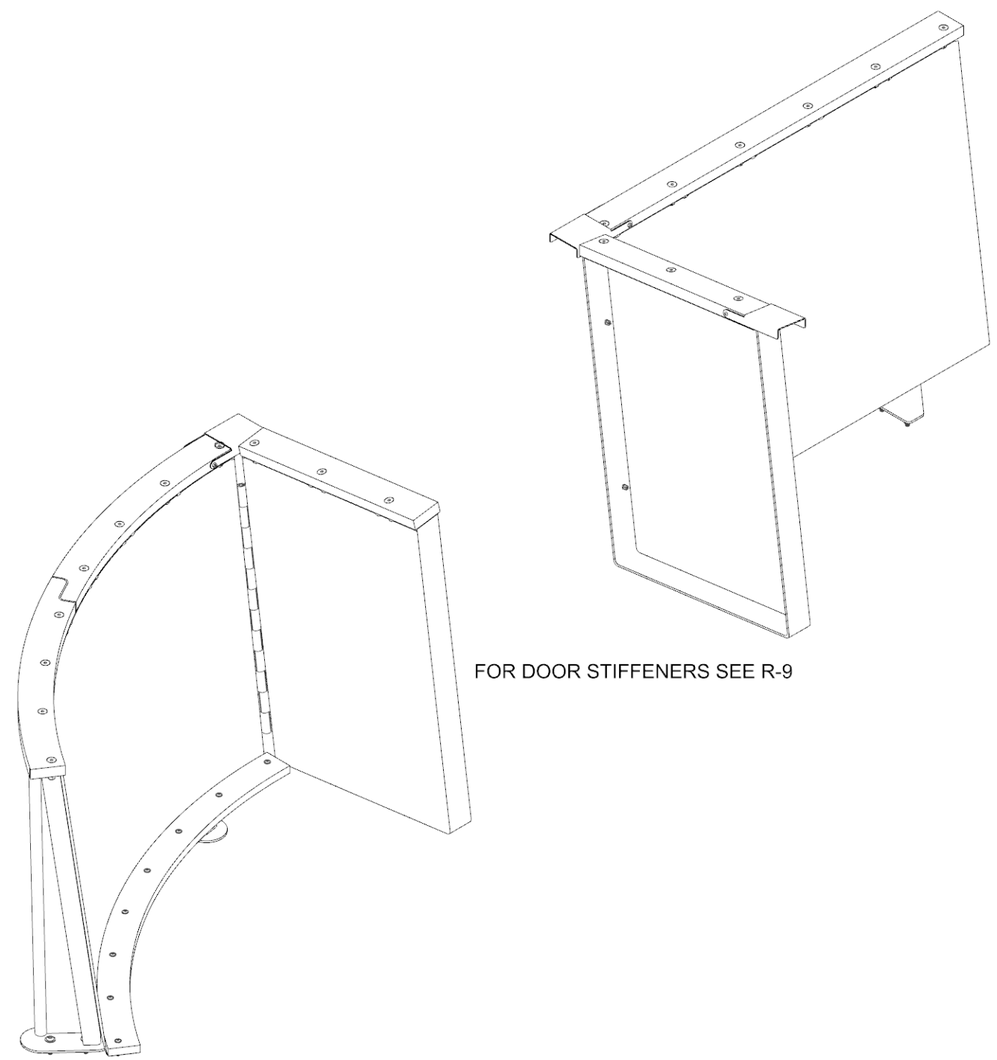

OPEN AND LATCHED DOOR

1 DOOR LATCHING MECHANISM 2 (D-SERIES)

NOTE: MUST BE COMPLETED TO THE SATISFACTION OF METALAB STUDIO (SEE SPECS)

NO.	ISSUE	DATE
1	ADDENDUM SET 1	1 September 2016

SAN ANTONIO RIVERBOATS
PROTOTYPE

[METALAB ARCHITECTURE]
20 N Sampson St
Houston, Texas 77003
713.426.3640
www.metalabstudio.com
info@metalabsudio.com
ARCHITECT

Grand Prince Design
Grand Prince, Inc.
1004 Lamar Drive
Lafayette, Indiana 47909
NAVAL ARCHITECT

SAR

SHEET SIZE: 12 X 18
SCALE AS NOTED

BID SET
NOT FOR CONSTRUCTION

RAIL DOOR
LOCKING
MECHANISM 2
D-SERIES

R-11

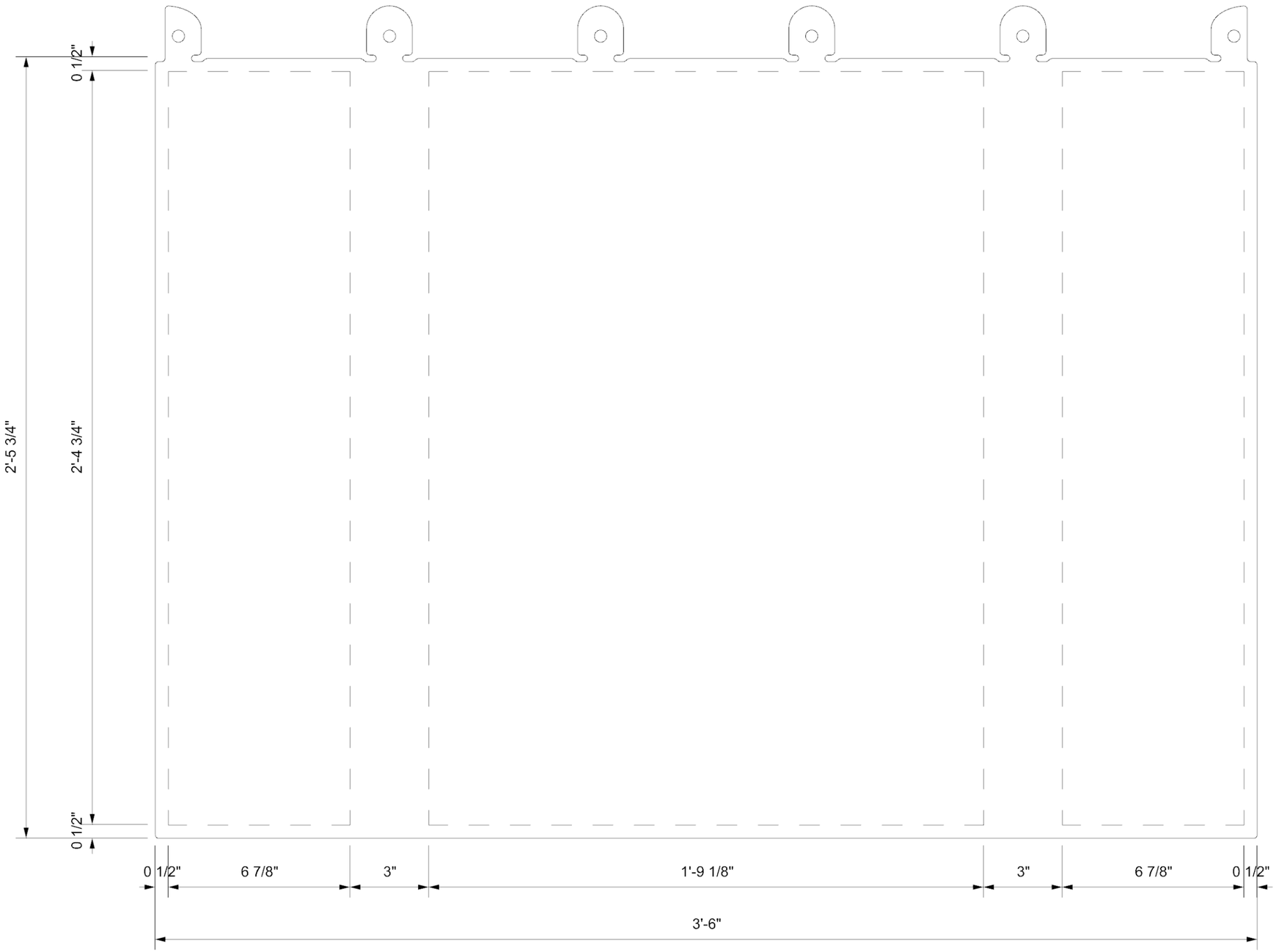

MATERIAL: 1/8" ALUMINUM 5052 WATERJET CUT, DEBURR, PAINT FINISH ONCE ASSEMBLED (SEE COLOR INDEX)

1 RAIL ARTBOARD (S-SERIES)

NOTE: ALL CUT FILES TO BE SUPPLIED TO WINNING BIDDER
NOTE: MUST BE COMPLETED TO THE SATISFACTION OF METALAB STUDIO (SEE SPECS)

NO.	ISSUE	DATE
1	ADDENDUM SET 1	1 September 2016

SAN ANTONIO RIVERBOATS
PROTOTYPE

[METALAB ARCHITECTURE]
20 N Sampson St
Houston, Texas 77003
713.426.3640
www.metalabstudio.com
info@metalabstudio.com
ARCHITECT

Gensler
NAVAL ARCHITECT

SAR

SHEET SIZE: 12 X 18
SCALE AS NOTED

BID SET
NOT FOR CONSTRUCTION

RAIL ARTBOARD
AREA 1
S-SERIES

R-12

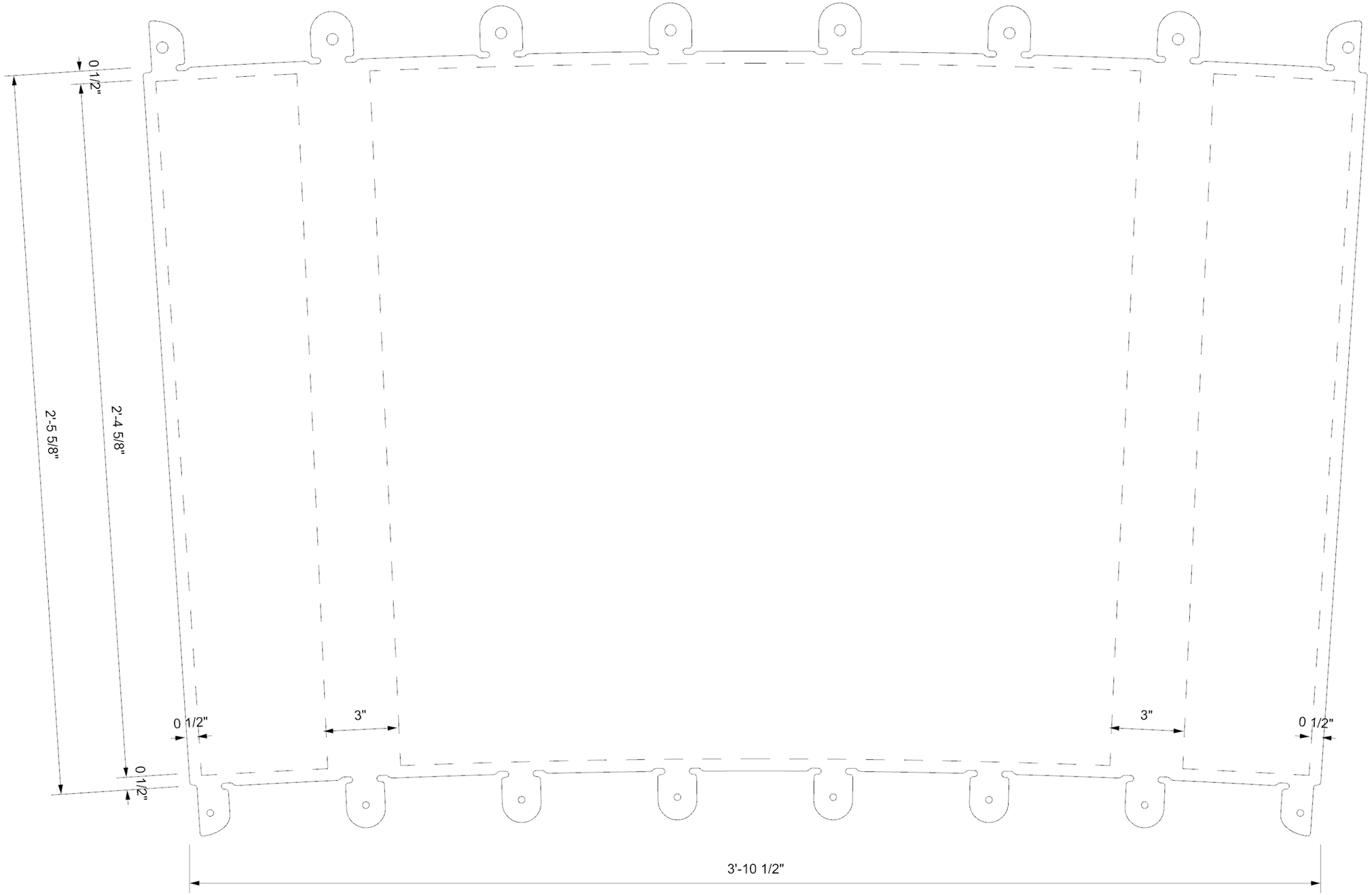

MATERIAL: 1/8" ALUMINUM 5052 WATERJET CUT, DEBURR, PAINT FINISH ONCE ASSEMBLED (SEE COLOR INDEX)

1 RAIL ARTBOARD (C-SERIES)

NOTE: ALL CUT FILES TO BE SUPPLIED TO WINNING BIDDER
NOTE: MUST BE COMPLETED TO THE SATISFACTION OF METALAB STUDIO (SEE SPECS)

NO.	ISSUE	DATE
1	ADDENDUM SET 1	1 September 2016

SAN ANTONIO RIVERBOATS
PROTOTYPE

[METALAB ARCHITECTURE]
20 N Sampson St
Houston, Texas 77003
713.426.3640
www.metalabstudio.com
info@metalabstudio.com
ARCHITECT

Grand Prairie Design Group, Inc.
1004 Lamar Drive,
Lancaster, Texas 75146
NAVAL ARCHITECT

SAR

SHEET SIZE: 12 X 18
SCALE AS NOTED

BID SET
NOT FOR CONSTRUCTION

RAIL ARTBOARD
AREA 2
C-SERIES

R-13

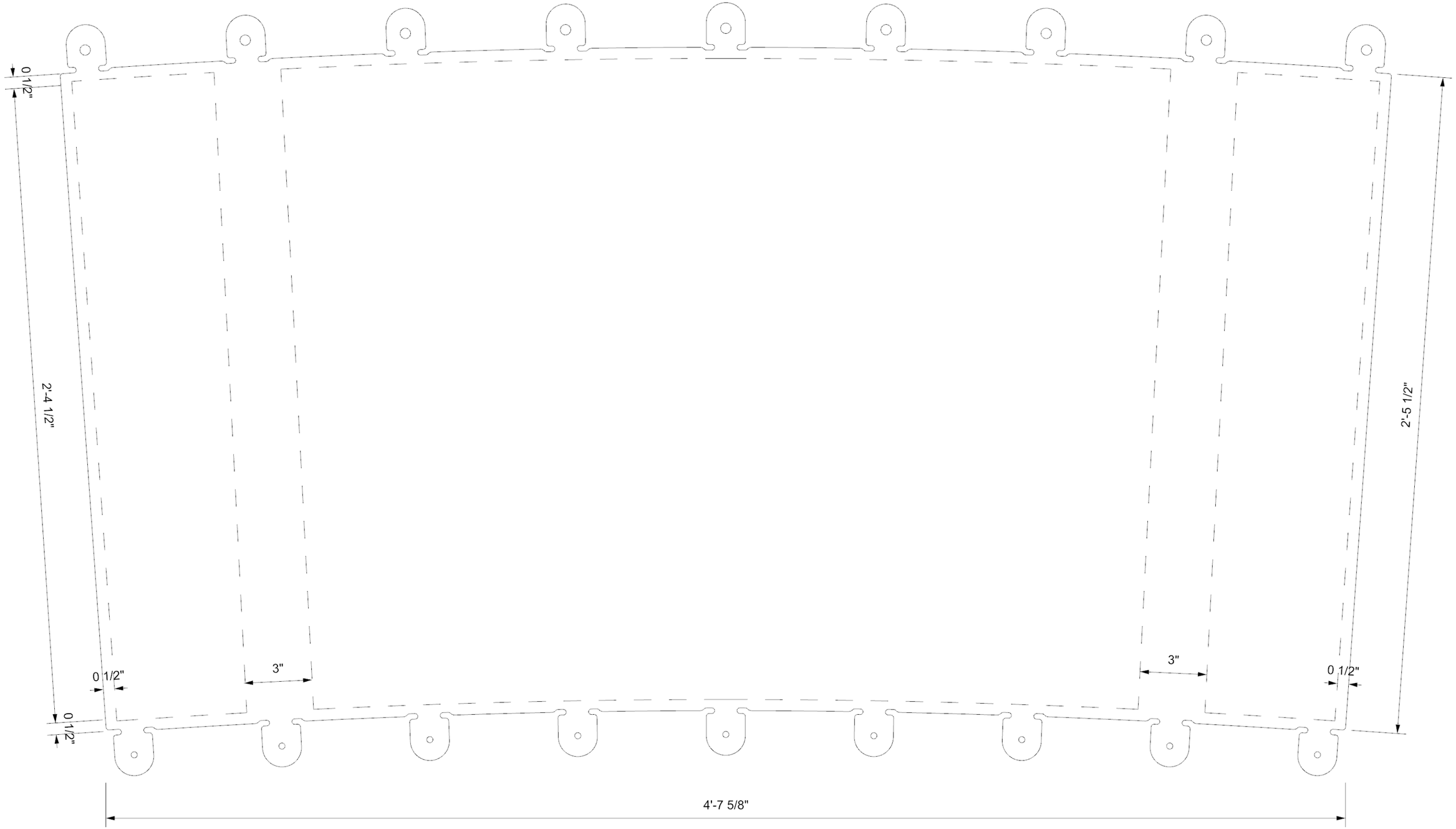

MATERIAL: 1/8" ALUMINUM 5052 WATERJET CUT, DEBURR, PAINT FINISH ONCE ASSEMBLED (SEE COLOR INDEX)

1 RAIL ARTBOARD (L-SERIES)

NOTE: ALL CUT FILES TO BE SUPPLIED TO WINNING BIDDER
NOTE: MUST BE COMPLETED TO THE SATISFACTION OF METALAB STUDIO (SEE SPECS)

NO.	ISSUE	DATE
1	ADDENDUM SET 1	1 September 2016

SAN ANTONIO RIVERBOATS
PROTOTYPE

[METALAB ARCHITECTURE]
20 N Sampson St
Houston, Texas 77003
713.426.3640
www.metalabstudio.com
info@metalabstudio.com
ARCHITECT

Grand Prairie Design Group, LLC
1004 Lamar Drive
Lancaster, Texas 75146
NAVAL ARCHITECT

SAR

SHEET SIZE: 12 X 18
SCALE AS NOTED

BID SET
NOT FOR CONSTRUCTION

RAIL ARTBOARD
AREA 3
L-SERIES

R-14

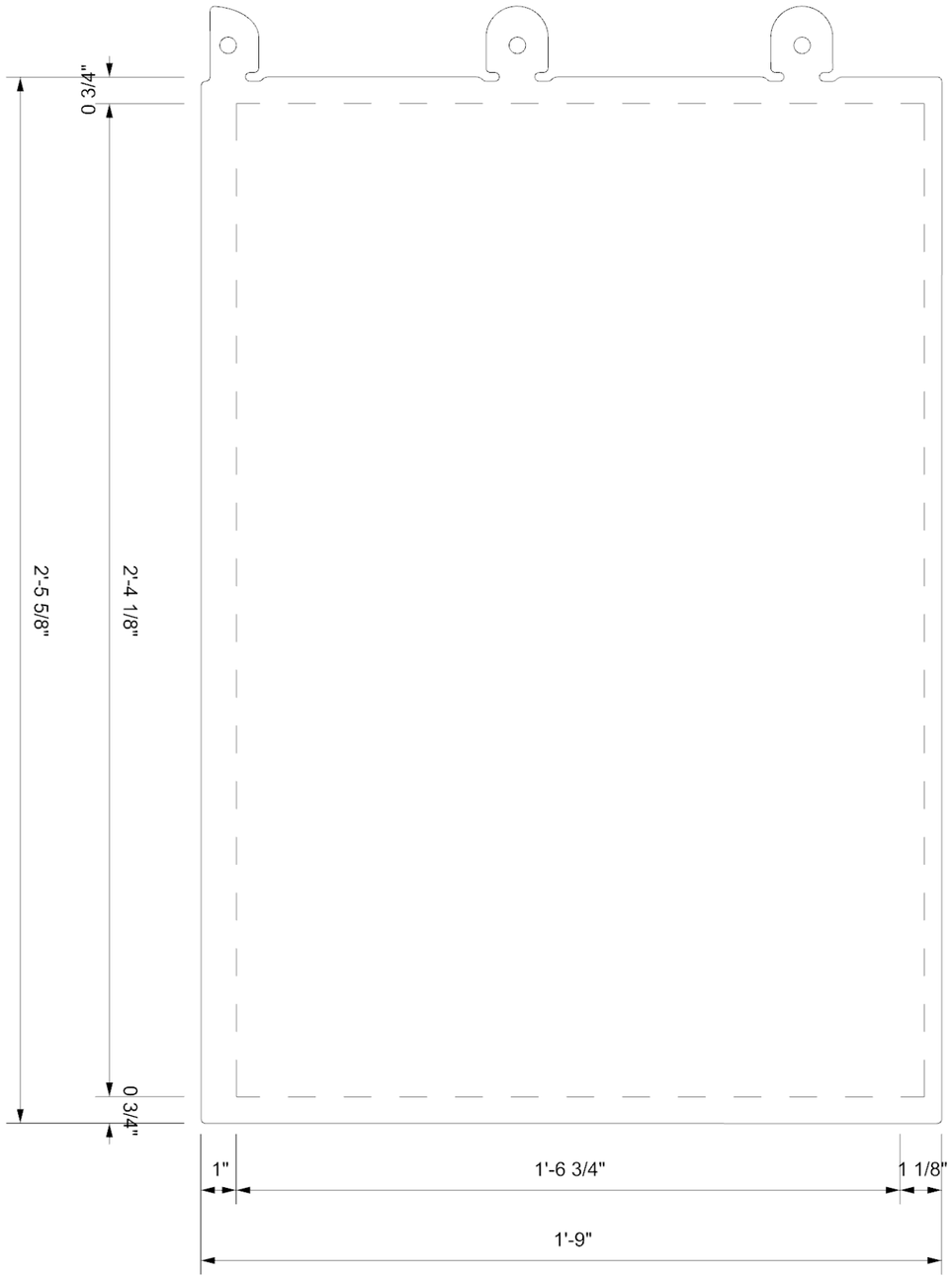

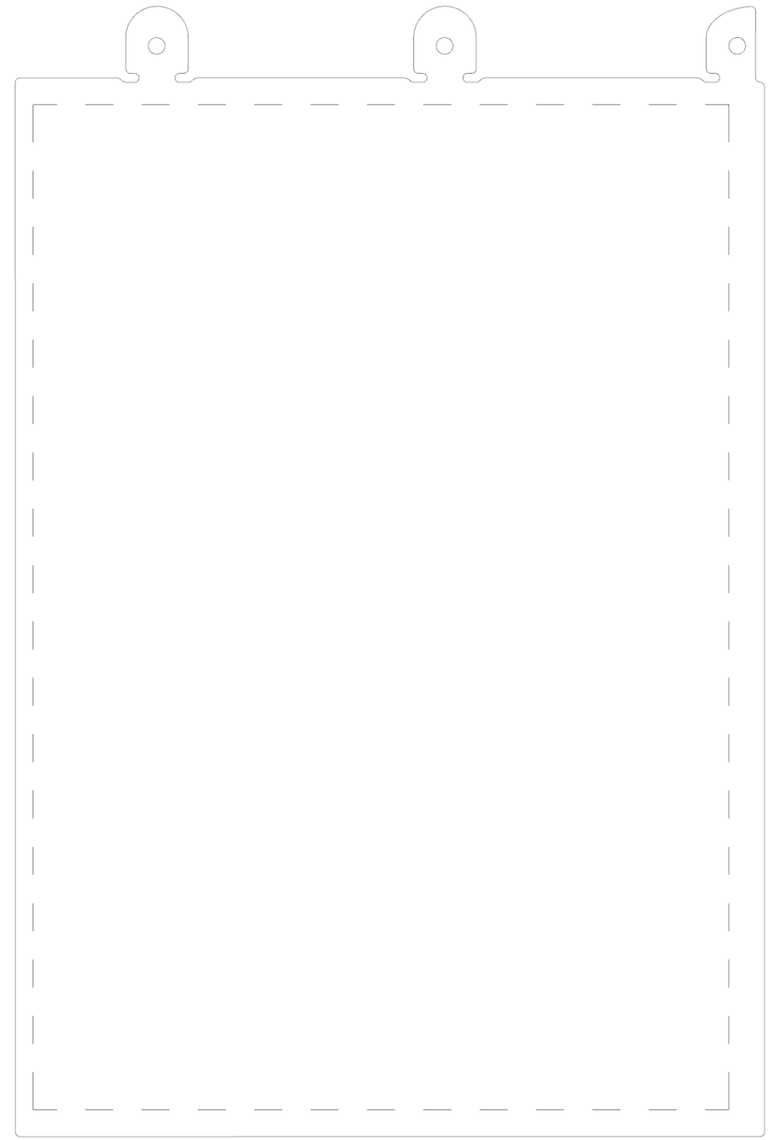

2 SETS OF DOORS (MIRRORED, SHOWN FOR REFERENCE ONLY)

MATERIAL: 1/8" ALUMINUM 5052 WATERJET CUT, DEBURR, PAINT FINISH ONCE ASSEMBLED (SEE COLOR INDEX)

1 RAIL ARTBOARD (D-SERIES)

NOTE: ALL CUT FILES TO BE SUPPLIED TO WINNING BIDDER
NOTE: MUST BE COMPLETED TO THE SATISFACTION OF METALAB STUDIO (SEE SPECS)

NO.	ISSUE	DATE
1	ADDENDUM SET 1	1 September 2016

SAN ANTONIO RIVERBOATS
PROTOTYPE

[METALAB ARCHITECTURE]
20 N Sampson St
Houston, Texas 77003
713.426.3640
www.metalabstudio.com
info@metalabstudio.com
ARCHITECT

Gensler Design & Planning
1000 Lamar Drive, Houston, Texas 77010
NAVAL ARCHITECT

SAR

SHEET SIZE: 12 X 18
SCALE AS NOTED

BID SET
NOT FOR CONSTRUCTION

RAIL ARTBOARD
AREA 4
D-SERIES

R-15

MATERIAL: 1/8" ALUMINUM 5052 WATERJET CUT, DEBURR, PAINT FINISH ONCE ASSEMBLED (SEE COLOR INDEX)

1 RAIL SAMPLE (S-SERIES) 1:4

NOTE: ALL CUT FILES TO BE SUPPLIED TO WINNING BIDDER
NOTE: MUST BE COMPLETED TO THE SATISFACTION OF METALAB STUDIO (SEE SPECS)

NO.	ISSUE	DATE
1	ADDENDUM SET 1	1 September 2016

SAN ANTONIO RIVERBOATS
PROTOTYPE

[METALAB ARCHITECTURE]
20 N Sampson St
Houston, Texas 77003
713.426.3640
www.metalabstudio.com
info@metalabstudio.com
ARCHITECT

Gensler
Design Partners
Houston, Texas
NAVAL ARCHITECT

SAR

SHEET SIZE: 12 X 18
SCALE AS NOTED

BID SET
NOT FOR CONSTRUCTION

RAIL ARTBOARD
SAMPLE 1
S-SERIES

R-16

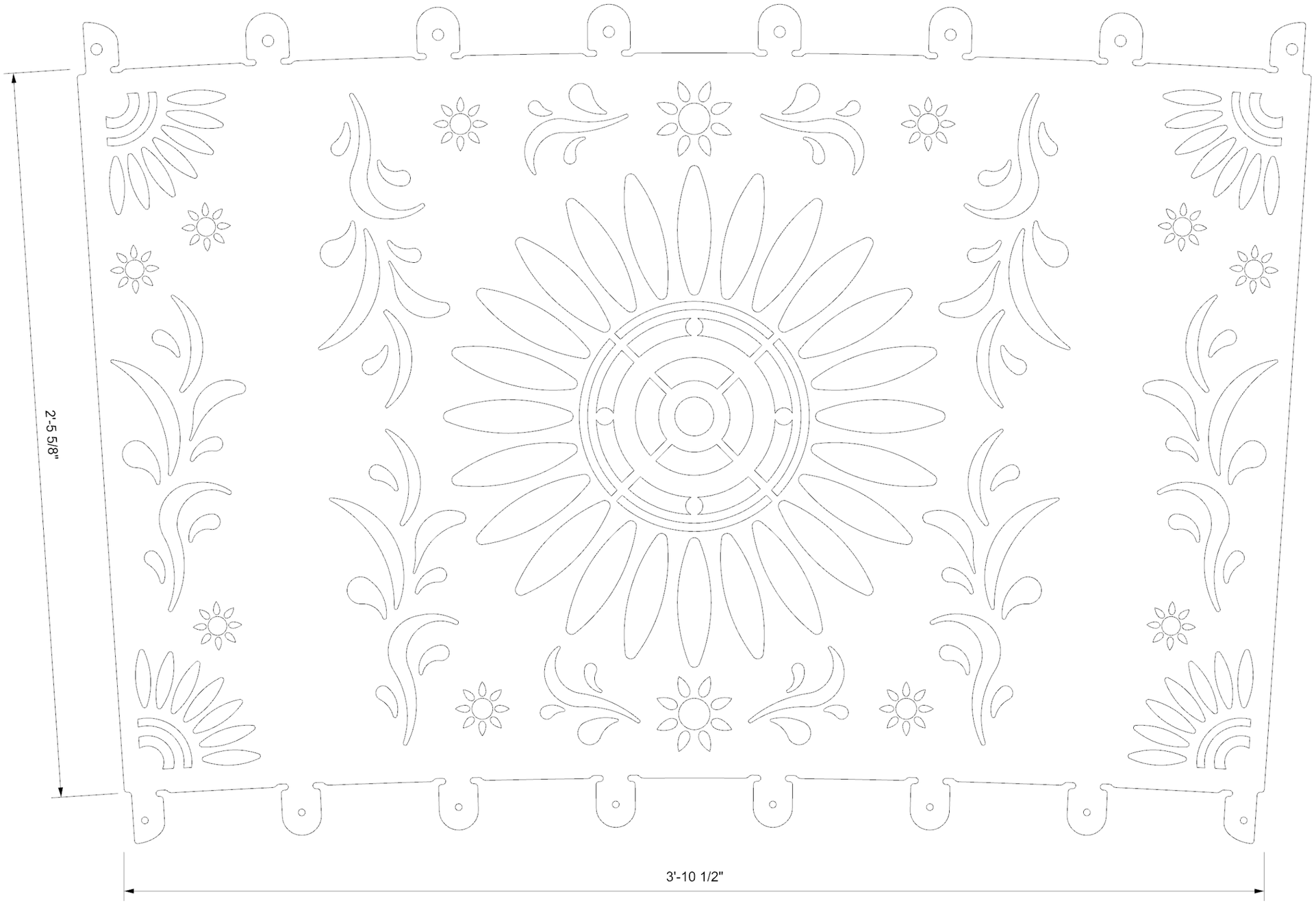

MATERIAL: 1/8" ALUMINUM 5052 WATERJET CUT, DEBURR, PAINT FINISH ONCE ASSEMBLED (SEE COLOR INDEX)

1 RAIL SAMPLE (C-SERIES) 1:4

NOTE: ALL CUT FILES TO BE SUPPLIED TO WINNING BIDDER
NOTE: MUST BE COMPLETED TO THE SATISFACTION OF METALAB STUDIO (SEE SPECS)

NO.	ISSUE	DATE
1	ADDENDUM SET 1	1 September 2016

SAN ANTONIO RIVERBOATS
PROTOTYPE

[METALAB ARCHITECTURE]
20 N Sampson St
Houston, Texas 77003
713.426.3640
www.metalabstudio.com
info@metalabstudio.com
ARCHITECT

Gensler
Gensler Design & Planning, Inc.
1500 Lamar Drive,
Houston, Texas 77010
NAVAL ARCHITECT

SAR

SHEET SIZE: 12 X 18
SCALE AS NOTED

BID SET
NOT FOR CONSTRUCTION

RAIL ARTBOARD
SAMPLE 2
C-SERIES

R-17

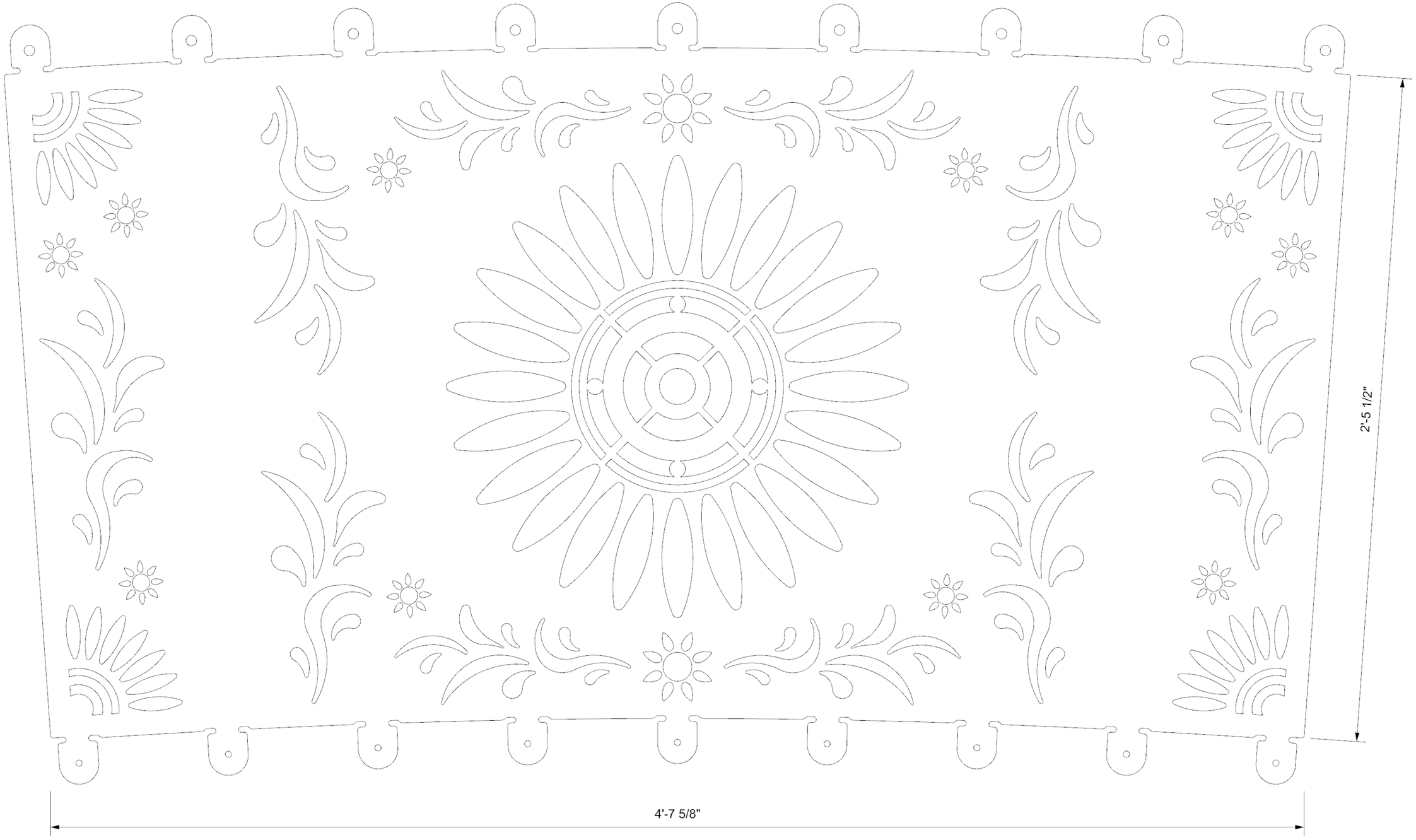

MATERIAL: 1/8" ALUMINUM 5052 WATERJET CUT, DEBURR, PAINT FINISH ONCE ASSEMBLED (SEE COLOR INDEX)

1 RAIL SAMPLE (L-SERIES) 1:4

NOTE: ALL CUT FILES TO BE SUPPLIED TO WINNING BIDDER
NOTE: MUST BE COMPLETED TO THE SATISFACTION OF METALAB STUDIO (SEE SPECS)

NO.	ISSUE	DATE
1	ADDENDUM SET 1	1 September 2016

SAN ANTONIO RIVERBOATS
PROTOTYPE

[METALAB ARCHITECTURE]
20 N Sampson St
Houston, Texas 77003
713.426.3640
www.metalabstudio.com
info@metalabsudio.com
ARCHITECT

Grand Prairie Design Group, LLC
1004 Lamar Drive
Lancaster, Texas 75146
NAVAL ARCHITECT

SAR

SHEET SIZE: 12 X 18
SCALE AS NOTED

BID SET
NOT FOR CONSTRUCTION

RAIL ARTBOARD
SAMPLE 3
L-SERIES

R-18

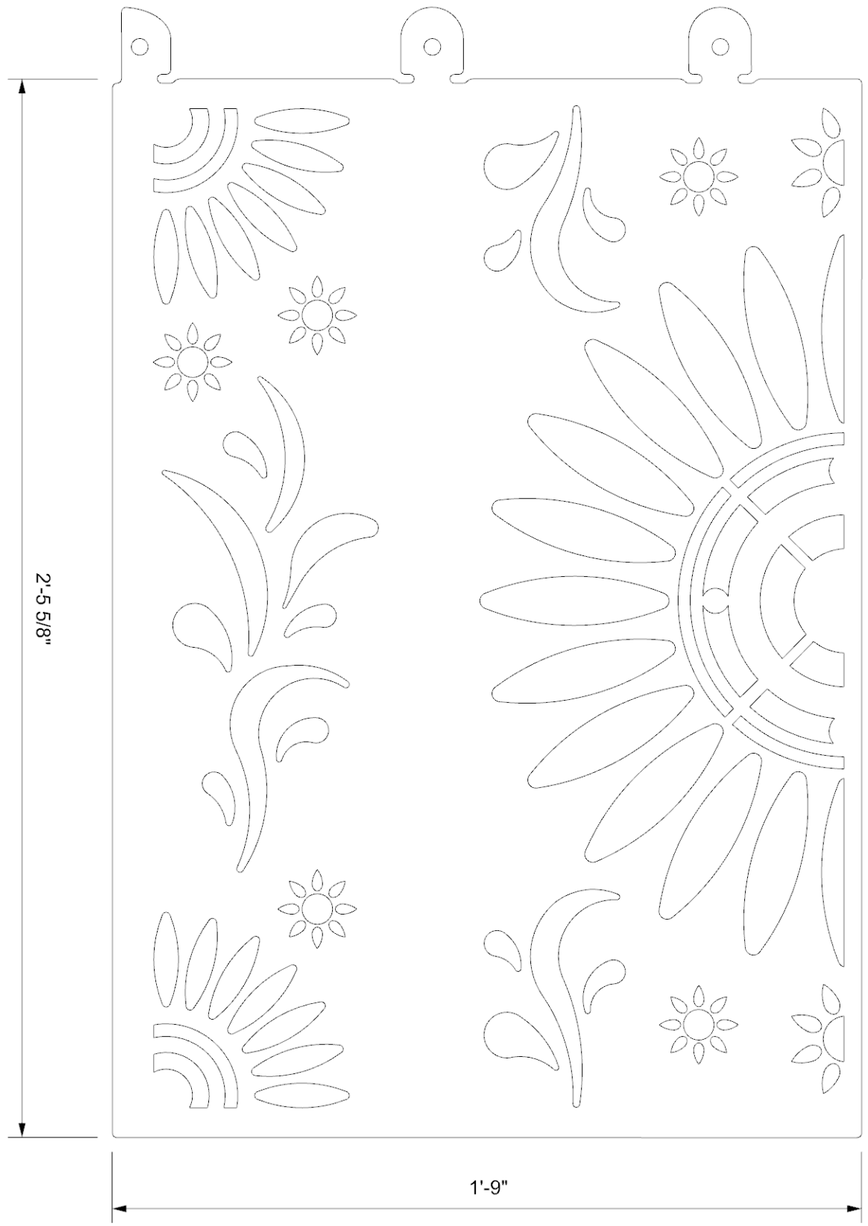

2 SETS OF DOORS (MIRRORED, SHOWN FOR REFERENCE ONLY)

MATERIAL: 1/8" ALUMINUM 5052 WATERJET CUT, DEBURR, PAINT FINISH ONCE ASSEMBLED (SEE COLOR INDEX)

1 RAIL SAMPLE (D-SERIES) 1:4

NOTE: ALL CUT FILES TO BE SUPPLIED TO WINNING BIDDER
NOTE: MUST BE COMPLETED TO THE SATISFACTION OF METALAB STUDIO (SEE SPECS)

NO.	ISSUE	DATE
1	ADDENDUM SET 1	1 September 2016

SAN ANTONIO RIVERBOATS
PROTOTYPE

[METALAB ARCHITECTURE]
20 N Sampson St
Houston, Texas 77003
713.426.3640
www.metalabstudio.com
info@metalabstudio.com
ARCHITECT

Gensler
1500 Lamar Drive,
Houston, Texas
77003-1004
NAVAL ARCHITECT

SAR

SHEET SIZE: 12 X 18
SCALE AS NOTED

BID SET
NOT FOR CONSTRUCTION

RAIL ARTBOARD
SAMPLE 4
D-SERIES

R-19

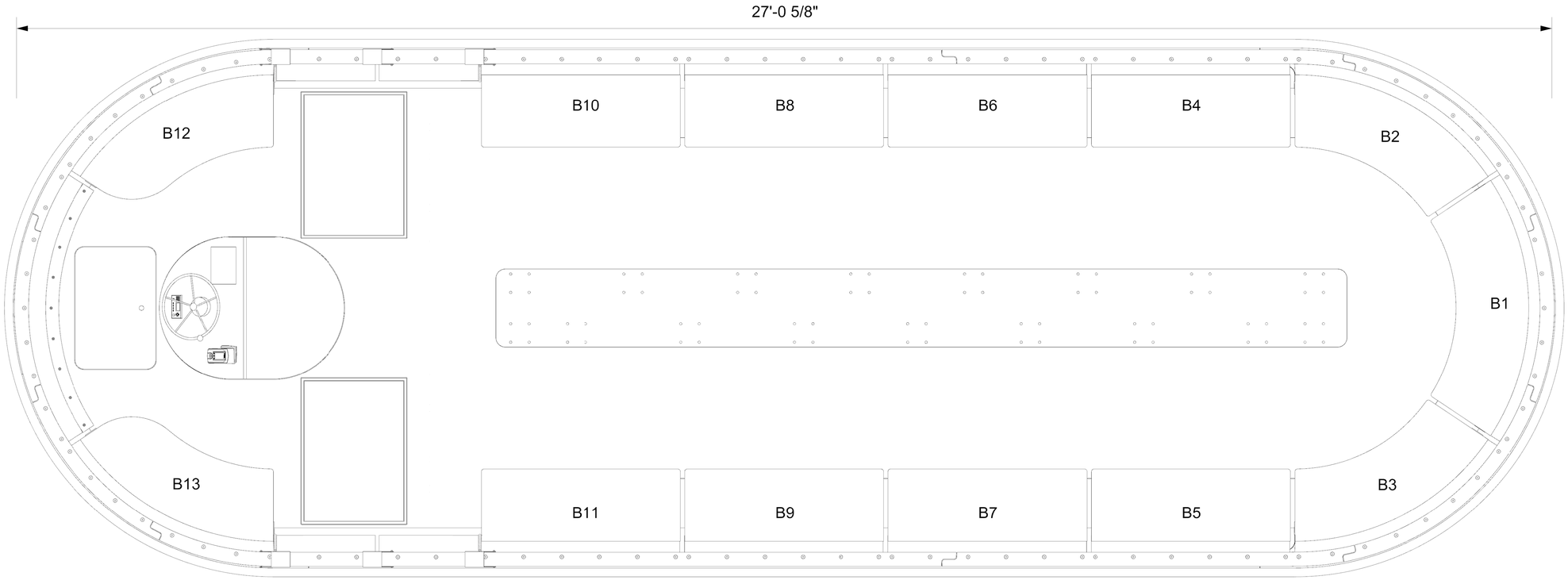

2 BENCH PLAN (TAXI SEATING) 1:24

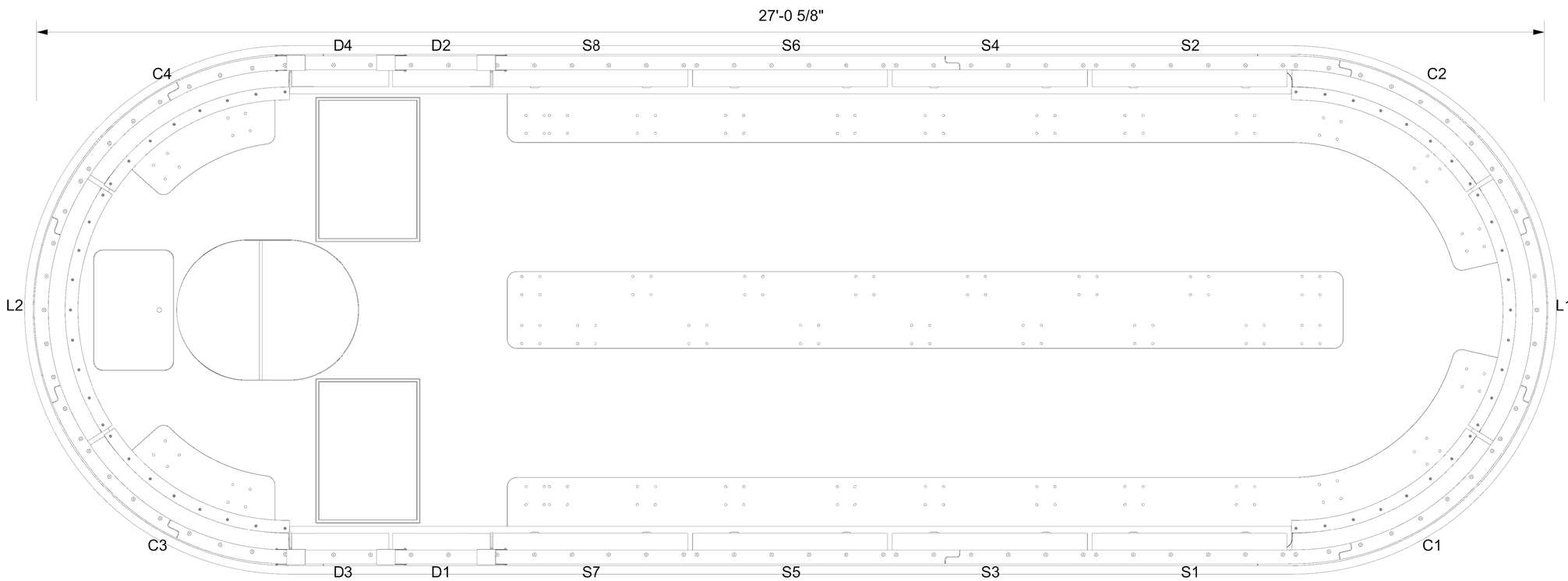

1 ACTIVITY PLAN (NO FIXED SEATING) 1:24

NOTE: MUST BE COMPLETED TO THE SATISFACTION OF METALAB STUDIO (SEE SPECS)

NO.	ISSUE	DATE
1	ADDENDUM SET 1	1 September 2016

SAN ANTONIO RIVERBOATS
PROTOTYPE

[METALAB ARCHITECTURE]
20 N Sampson St
Houston, Texas 77003
713.426.3640
www.metalabstudio.com
info@metalabstudio.com
ARCHITECT

Gwen Nelson Design
(985) 515-1243
3004 Canal Drive
Metairie, Louisiana 70006
Louisiana 70006
NAVAL ARCHITECT

SAR

SHEET SIZE: 12 X 18
SCALE AS NOTED

BID SET
NOT FOR CONSTRUCTION

SEATING CONFIGURATION TYPE 1 & 2

S-1

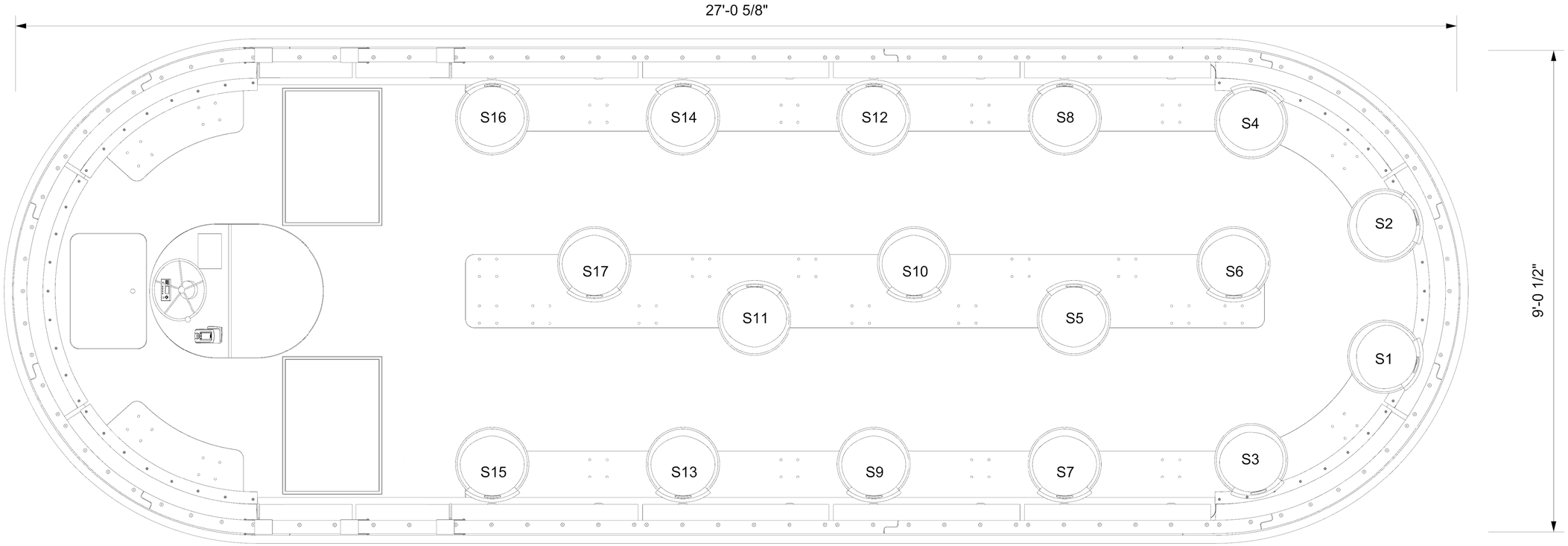

2 SEAT PLAN (360 TOUR SEATING) 1:24

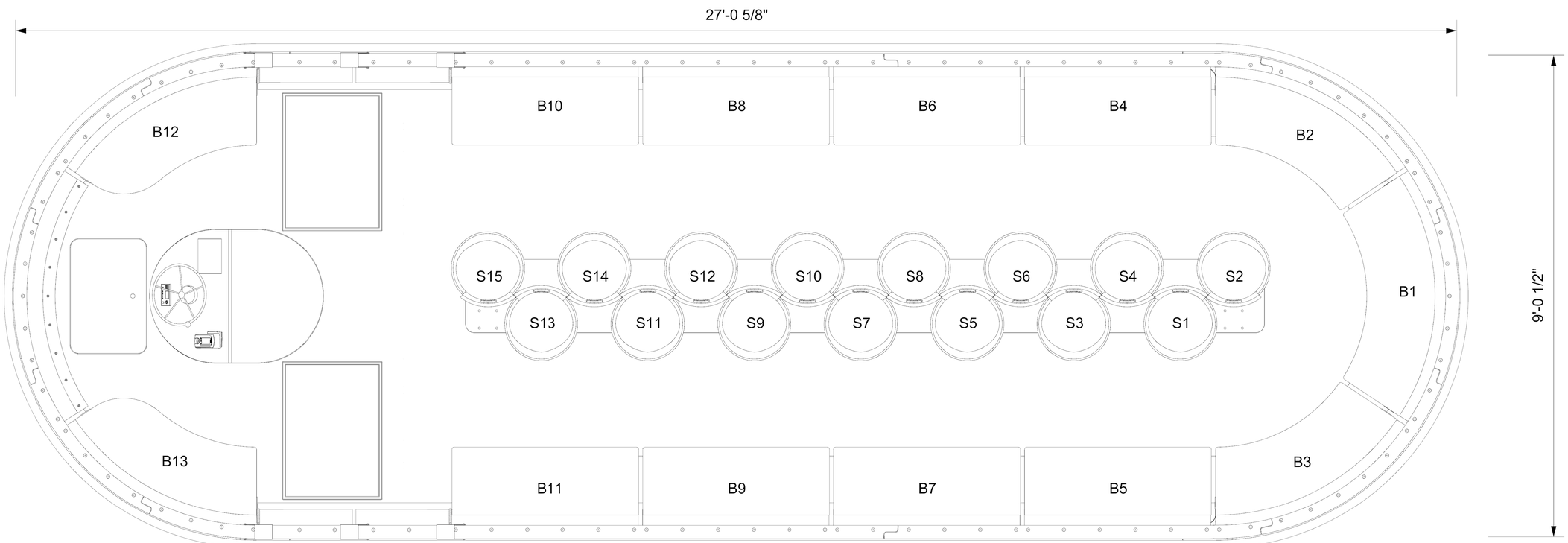

1 SEAT AND BENCH PLAN (TOUR SEATING) 1:24

NOTE: MUST BE COMPLETED TO THE SATISFACTION OF METALAB STUDIO (SEE SPECS)

NO.	ISSUE	DATE
1	ADDENDUM SET 1	1 September 2016

SAN ANTONIO RIVERBOATS
PROTOTYPE

[METALAB ARCHITECTURE]
20 N Sampson St
Houston, Texas 77003
713.426.3640
www.metalabstudio.com
info@metalabstudio.com
ARCHITECT

Gaspe Nolan Design
(985) 515-1263
3004 Canal Drive
Metairie, Louisiana 70006
Louisiana 70506
NAVAL ARCHITECT

SAR

BID SET
NOT FOR CONSTRUCTION

SHEET SIZE: 12 X 18
SCALE AS NOTED

SEATING CONFIGURATION TYPE 3 & 4

S-2

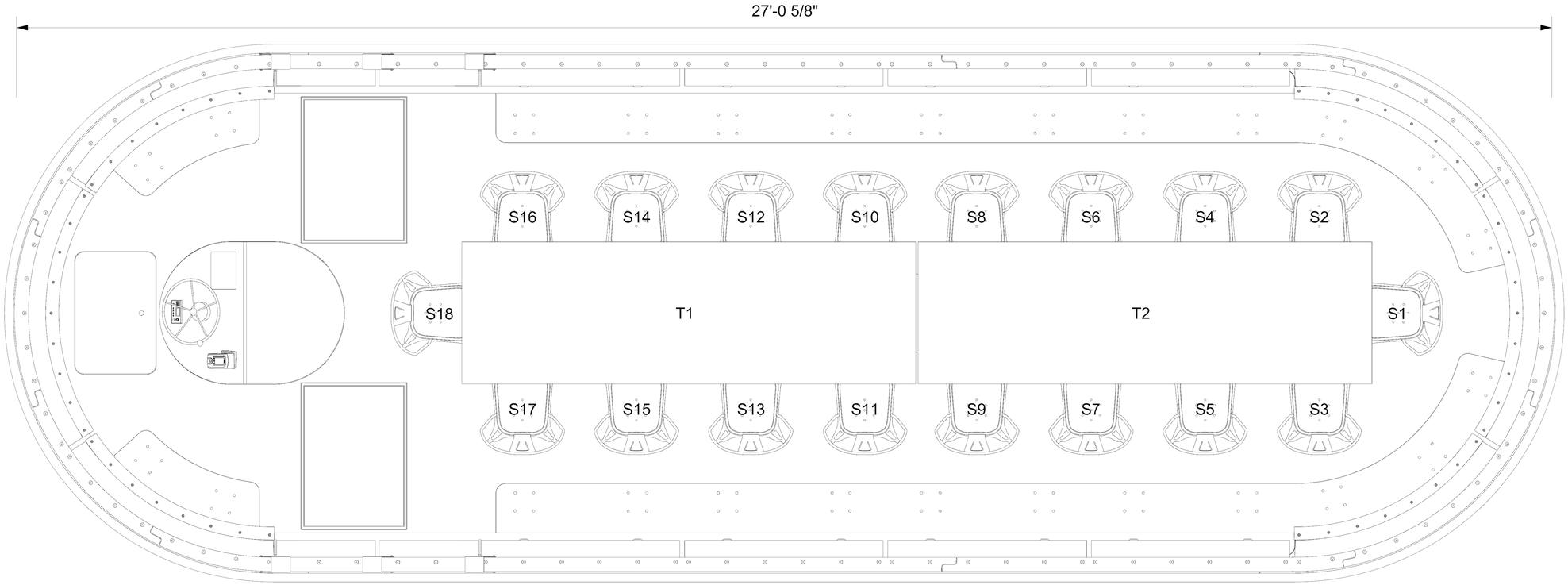

2 DINING PLAN (GROUP SEATING) 1:24

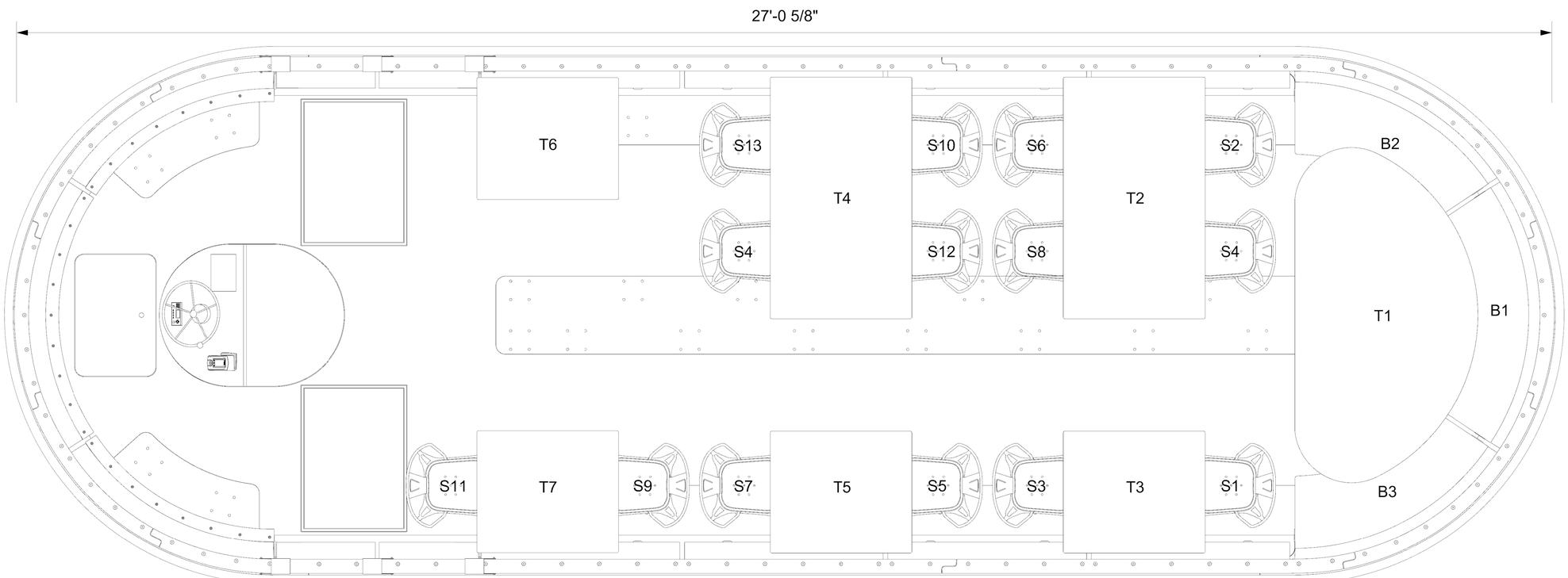

1 DINING PLAN (BISTRO SEATING) 1:24

NOTE: MUST BE COMPLETED TO THE SATISFACTION OF METALAB STUDIO (SEE SPECS)

NO.	ISSUE	DATE
1	ADDENDUM SET 1	1 September 2016

SAN ANTONIO RIVERBOATS
PROTOTYPE

[METALAB ARCHITECTURE]
20 N Sampson St
Houston, Texas 77003
713.426.3640
www.metalabstudio.com
info@metalabstudio.com
ARCHITECT

Gonzo Nolan Design
(985) 515-2263
3004 Canal Drive,
New Orleans, Louisiana 70130
NAVAL ARCHITECT

SAR

BID SET
NOT FOR CONSTRUCTION

SHEET SIZE: 12 X 18
SCALE AS NOTED

SEATING CONFIGURATION TYPE 5 & 6

S-3

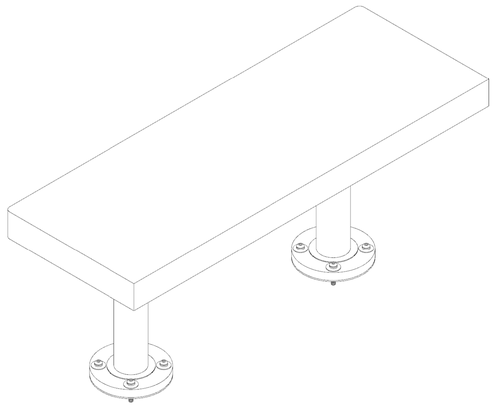

STRAIGHT BENCH X 8 (SEE S-6 AND S-8)
S-SERIES

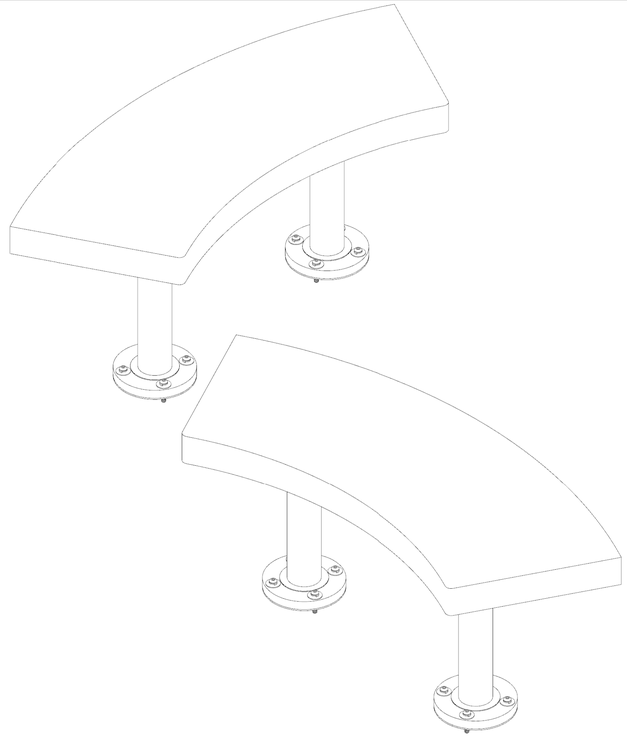

CURVED BENCH X 2 (SEE S-6 AND S-9)
C-SERIES

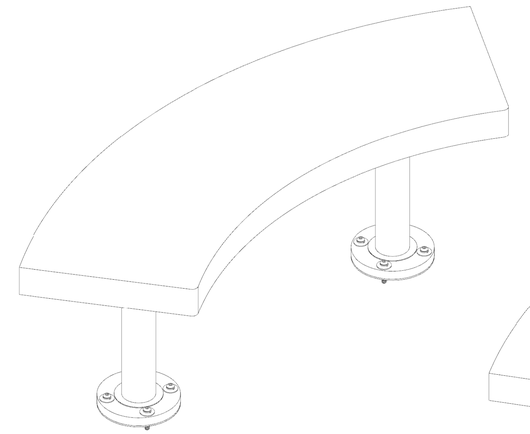

LONG CURVED BENCH X 1 (SEE S-7 AND S-10)
L-SERIES

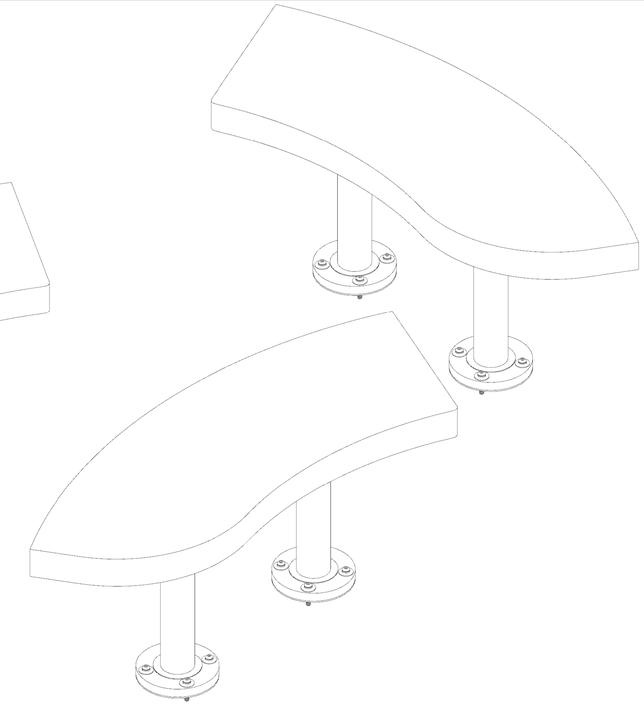

BACK CURVE BENCH X 2 (SEE S-7 AND S-11)
B-SERIES

2 BENCH SCHEDULE

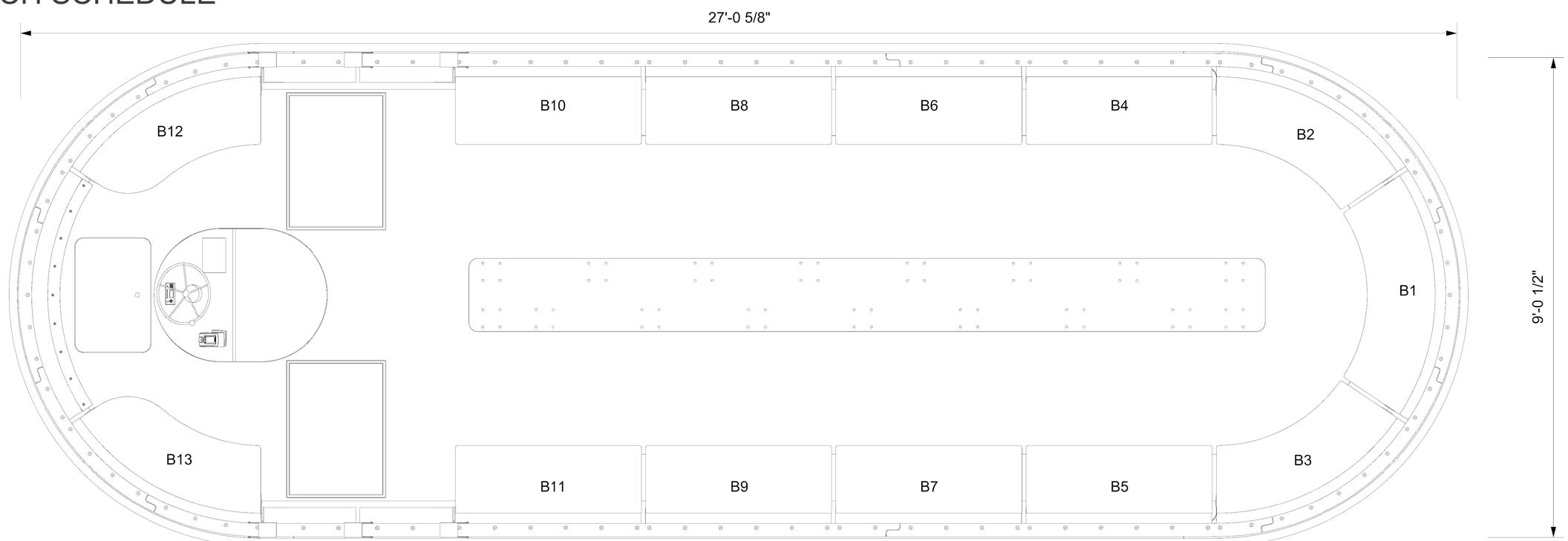

1 BENCH PLAN 1:24

NOTE: MUST BE COMPLETED TO THE SATISFACTION OF METALAB STUDIO (SEE SPECS)

NO.	ISSUE	DATE
1	ADDENDUM SET 1	1 September 2016

SAN ANTONIO RIVERBOATS
PROTOTYPE

[METALAB ARCHITECTURE]
20 N Sampson St
Houston, Texas 77003
713.426.3640
www.metalabstudio.com
info@metalabstudio.com

NAVAL ARCHITECT

SAR

BID SET
NOT FOR CONSTRUCTION

SHEET SIZE: 12 X 18
SCALE AS NOTED

BENCH PLAN
AND SCHEDULE

S-4

BENCH HARDWARE SCHEDULE

DRAWING	DESCRIPTION	# PER STRAIGHT BENCH	# PER CURVE BENCH	# PER LONG BENCH	# PER BACK BENCH	TOTAL
	Barbed Inserts for Softwood Open End Flanged 1/4"-20 Length 0.512" 90267A697	13	13	20	10	170
	18-8 Stainless Steel Flat Washer 1/4" 0.625" OD 92141A029	13	13	20	10	170
	18-8 Stainless Steel Split Lock Washer 1/4" 0.487" OD 92146A029	13	13	20	10	170
	18-8 Stainless Steel Button Head Socket Cap Screw 1/4"-20, 1 1/4" Length 92949A544	13	13	20	10	170

ITEMS FOR BENCH ASSEMBLY

NOTE: USE IRONTITE OR EQUAL ON ALL STAINLESS FASTENERS TO PREVENT SEIZING AND GALLING

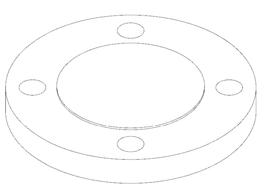

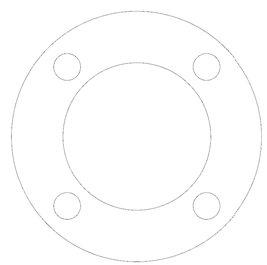

ITEM: 2 1/2" Bolt Circle Blind Flange or Waterjet Equivalent
MATERIAL: Aluminum 5052 with Painted Finish See Color Index
AMT: 2 per Bench (26 Total)
See S-6 for more information about assembly

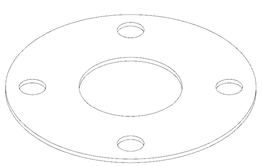

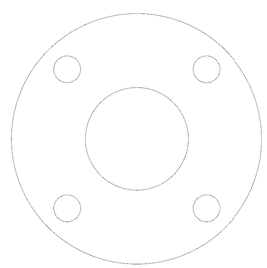

ITEM: Compressible Buna-N Flange Gasket 2 1/2" Pipe 1/8" Thick or Waterjet Equivalent
MATERIAL: Aluminum 5052
AMT: 2 per Bench (26 Total)
See S-6 for more information about assembly

1 BENCH HARDWARE SCHEDULE

ITEMS FOR BENCH ASSEMBLY (CONT.)

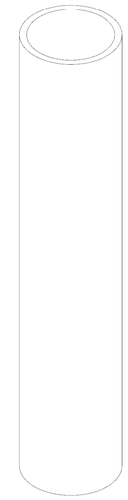

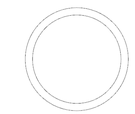

ITEM: 2 1/2" Pipe 1' 2 3/4" Long
MATERIAL: Aluminum 5052 with Painted Finish See Color Index
AMT: 2 per Bench (26 Total)
See S-6 for more information about assembly

2 BENCH DETAILS

NO.	ISSUE	DATE
1	ADDENDUM SET 1	1 September 2016

SAN ANTONIO RIVERBOATS
PROTOTYPE

[METALAB ARCHITECTURE]
20 N Sampson St
Houston, Texas 77003
713.426.3640
www.metalabstudio.com
info@metalabstudio.com
ARCHITECT

Gossen Nelson Design
(985) 515-2263
3004 Canal Drive,
New Orleans, Louisiana 70119
NAVAL ARCHITECT

SAR

BID SET
NOT FOR CONSTRUCTION

SCALE AS NOTED
SHEET SIZE: 12 X 18

BENCH HARDWARE SCHEDULE AND BENCH DETAILS

S-5

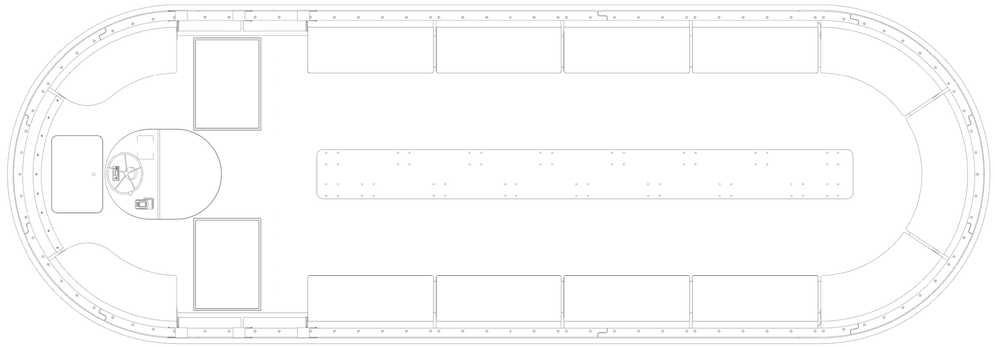

STRAIGHT BENCH X 8 (SEE S-8)
S-SERIES

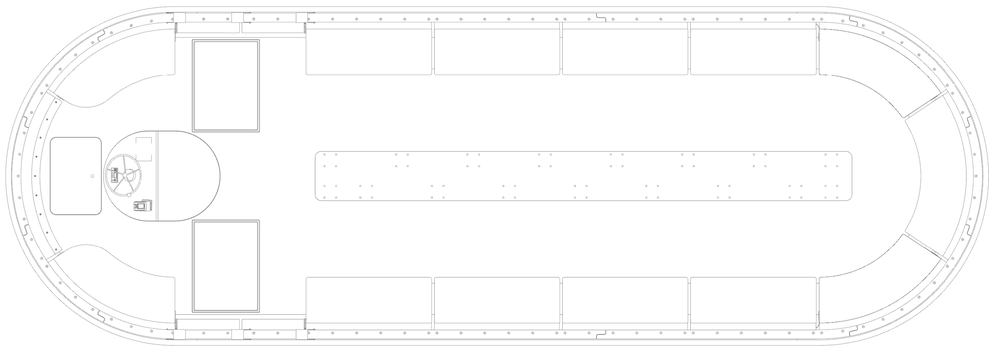

CURVED BENCH LEFT AND RIGHT (SEE S-9)
C-SERIES

2 BENCH POST PLAN REFERENCES 1:48

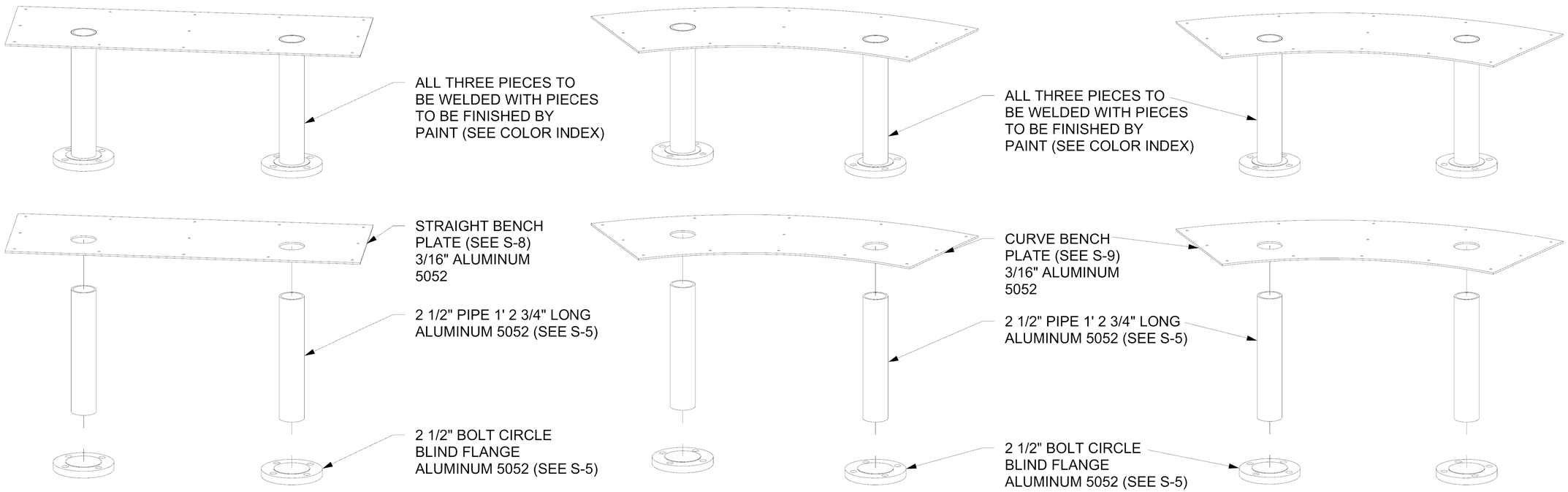

STRAIGHT BENCH X 8 (SEE S-8)
S-SERIES

CURVED BENCH LEFT (SEE S-9)
C-SERIES

CURVED BENCH RIGHT (SEE S-9)
C-SERIES

1 BENCH POST ASSEMBLY DRAWINGS

NOTE: ALL CUT FILES TO BE SUPPLIED TO WINNING BIDDER
NOTE: MUST BE COMPLETED TO THE SATISFACTION OF METALAB STUDIO (SEE SPECS)

NO.	ISSUE	DATE
1	ADDENDUM SET 1	1 September 2016

SAN ANTONIO RIVERBOATS
PROTOTYPE

[METALAB ARCHITECTURE]
20 N Sampson St
Houston, Texas 77003
713.426.3640
www.metalabstudio.com
info@metalabstudio.com
ARCHITECT

Gaines Nelson Design
(985) 515-1263
3004 Canal Drive,
New Orleans, Louisiana 70118
NAVAL ARCHITECT

SAR

BID SET
NOT FOR CONSTRUCTION

SHEET SIZE: 12 X 18
SCALE AS NOTED

BENCH POST
ASSEMBLY
DRAWINGS 1

S-6

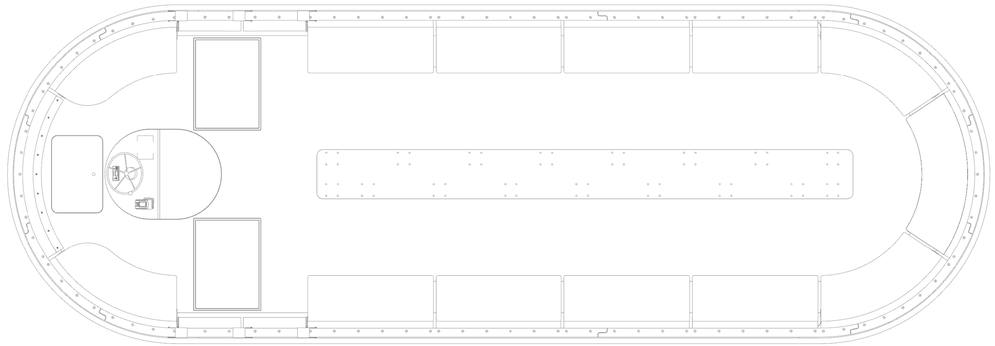

LONG BENCH X 1 (SEE S-10)
L-SERIES

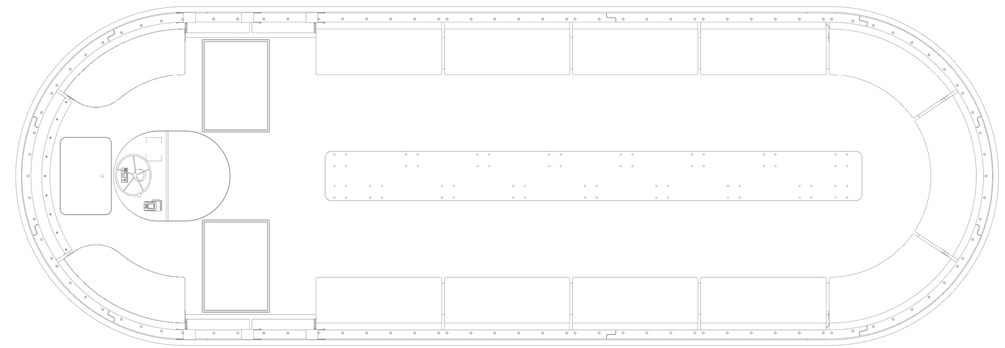

BACK BENCH LEFT AND RIGHT (SEE S-11)
B-SERIES

2 BENCH POST PLAN REFERENCES 1:48

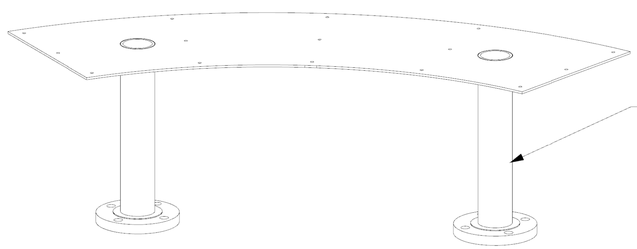

ALL THREE PIECES TO
BE WELDED WITH PIECES
TO BE FINISHED BY
PAINT (SEE COLOR INDEX)

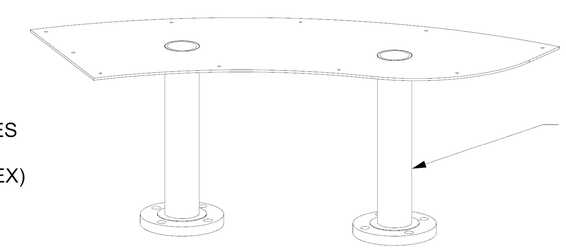

ALL THREE PIECES TO
BE WELDED WITH PIECES
TO BE FINISHED BY
PAINT (SEE COLOR INDEX)

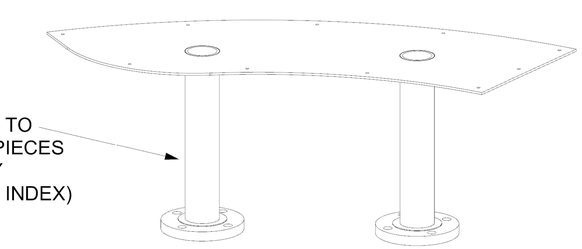

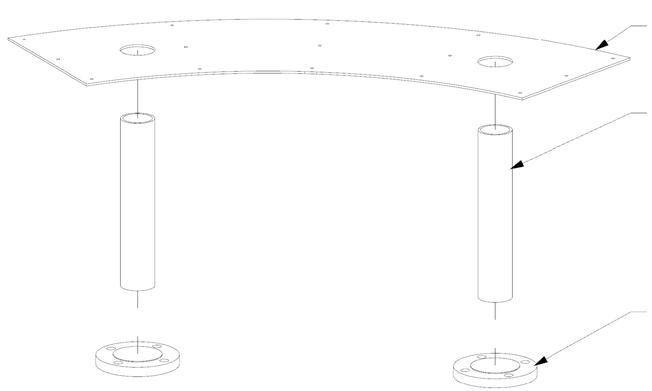

LONG BENCH PLATE
(SEE S-10)
3/16" ALUMINUM 5052

2 1/2" PIPE 1' 2 3/4" LONG
ALUMINUM 5052 (SEE S-5)

2 1/2" BOLT CIRCLE
BLIND FLANGE
ALUMINUM 5052 (SEE S-5)

LONG BENCH X 1 (SEE S-10)
L-SERIES

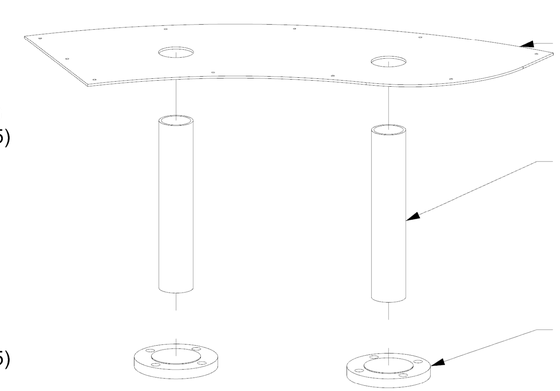

BACK BENCH
PLATE (SEE S-11)
3/16" ALUMINUM
5052

2 1/2" PIPE 1' 2 3/4" LONG
ALUMINUM 5052 (SEE S-5)

2 1/2" BOLT CIRCLE
BLIND FLANGE
ALUMINUM 5052 (SEE S-5)

BACK BENCH LEFT (SEE S-11)
B-SERIES

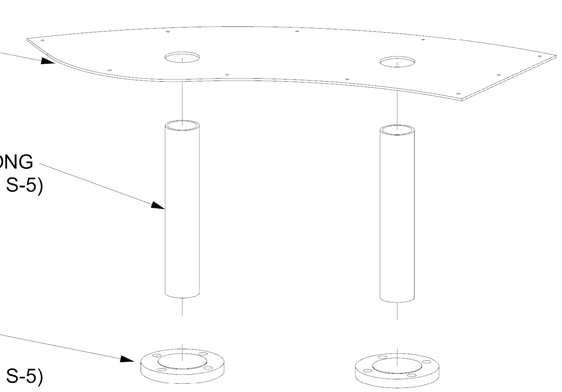

BACK BENCH RIGHT (SEE S-11)
B-SERIES

1 BENCH POST ASSEMBLY DRAWINGS

NOTE: ALL CUT FILES TO BE SUPPLIED TO WINNING BIDDER
NOTE: MUST BE COMPLETED TO THE SATISFACTION OF METALAB STUDIO (SEE SPECS)

NO.	ISSUE	DATE
1	ADDENDUM SET 1	1 September 2016

SAN ANTONIO RIVERBOATS
PROTOTYPE

[METALAB ARCHITECTURE]
20 N Sampson St
Houston, Texas 77003
713.426.3640
www.metalabstudio.com
info@metalabstudio.com
ARCHITECT

Gaspe Noble Design
(985) 515-2263
3004 Canal Drive
Metairie, Louisiana 70006
Louisiana 70506
NAVAL ARCHITECT

SAR

BID SET
NOT FOR CONSTRUCTION

SCALE AS NOTED
SHEET SIZE: 12 X 18

BENCH POST
ASSEMBLY
DRAWINGS 2

S-7

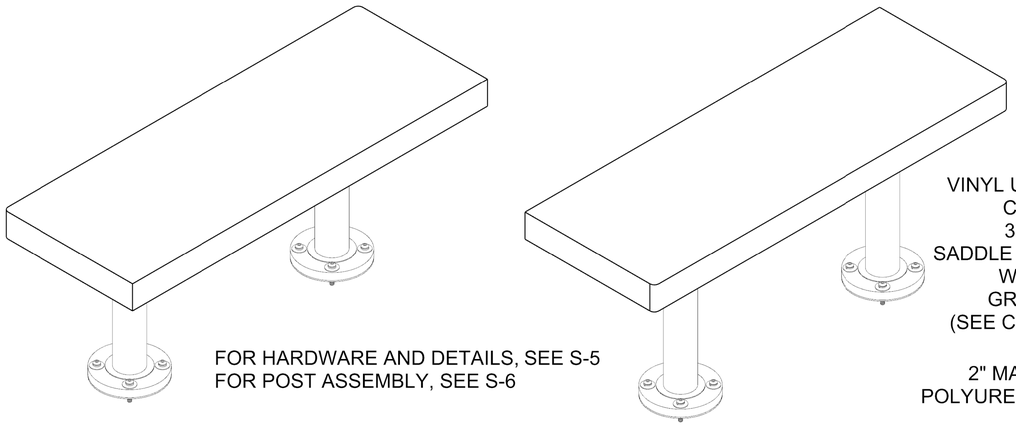

FOR HARDWARE AND DETAILS, SEE S-5
FOR POST ASSEMBLY, SEE S-6

2 BENCH ASSEMBLY (S-SERIES) 1:12

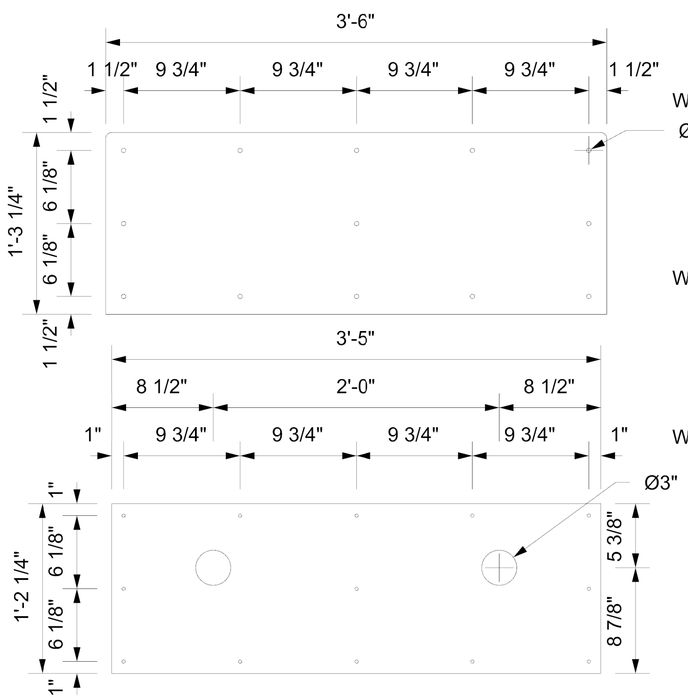

MATERIAL:
3/4" MARINE GRADE
PLYWOOD

MATERIAL:
3/16" ALUMINUM 5052
AFTER ASSEMBLED,
FINISHED WITH
PAINT (SEE S-6 AND
SEE COLOR INDEX)

1 BENCH PIECES (S-SERIES) 1:12

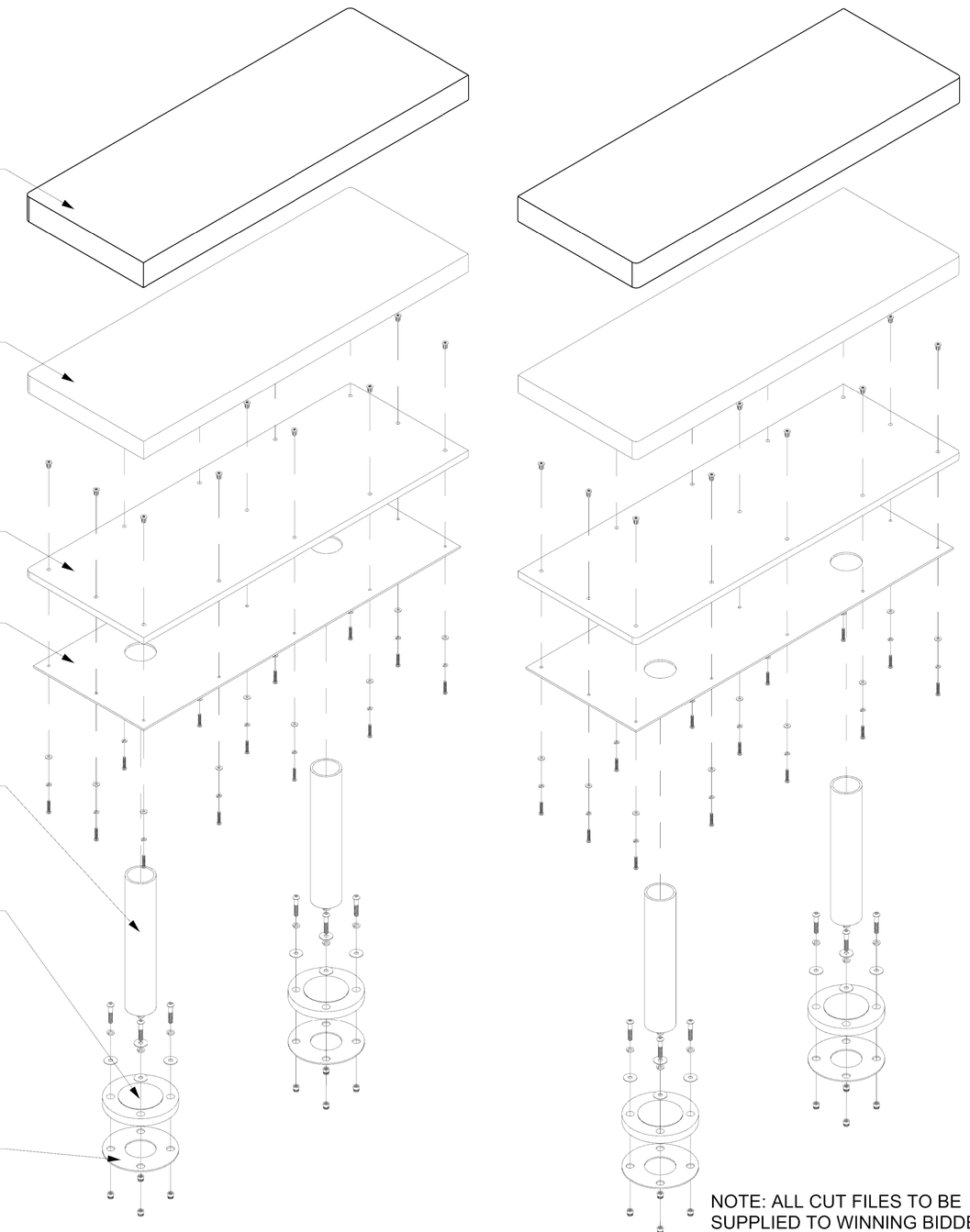

3 BENCH ASSEMBLY (S-SERIES) 1:12

NOTE: ALL CUT FILES TO BE
SUPPLIED TO WINNING BIDDER
NOTE: MUST BE COMPLETED
TO THE SATISFACTION OF
METALAB STUDIO (SEE SPECS)

NO.	ISSUE	DATE
1	ADDENDUM SET 1	1 September 2016

SAN ANTONIO RIVERBOATS
PROTOTYPE

[METALAB ARCHITECTURE]
20 N Sampson St
Houston, Texas 77003
713.426.3640
www.metalabstudio.com
info@metalabstudio.com
ARCHITECT

Gaspe Naval Design
(985) 515-2263
3004 Canal Drive
Lake Charles, Louisiana 70606
NAVAL ARCHITECT

SAR

BID SET
NOT FOR CONSTRUCTION

SHEET SIZE: 12 X 18
SCALE AS NOTED

BENCH
ASSEMBLY
DRAWINGS 1
S-SERIES

S-8

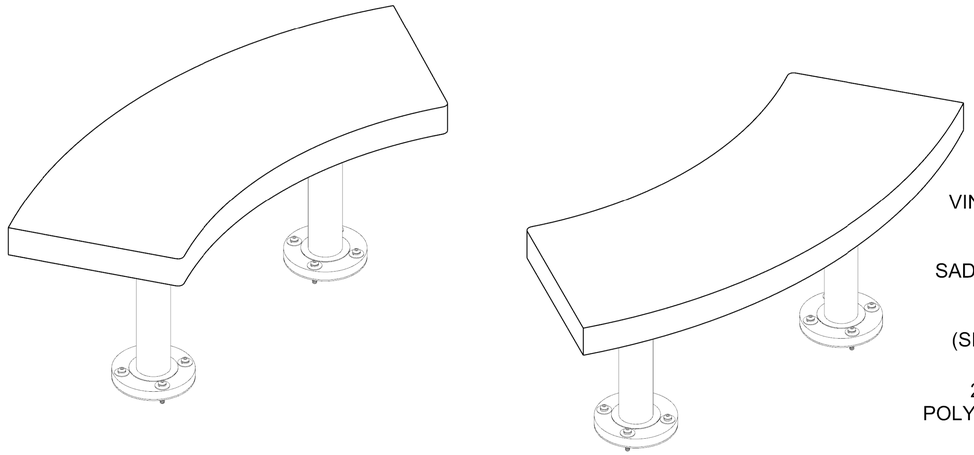

FOR HARDWARE AND DETAILS, SEE S-5
FOR POST ASSEMBLY, SEE S-6

FOR C-SERIES, ALL FABRICATION PARTS
ARE THE SAME BUT ASSEMBLY IS MIRRORED
BETWEEN LEFT AND RIGHT PER S-6

2 BENCH ASSEMBLY (C-SERIES) 1:12

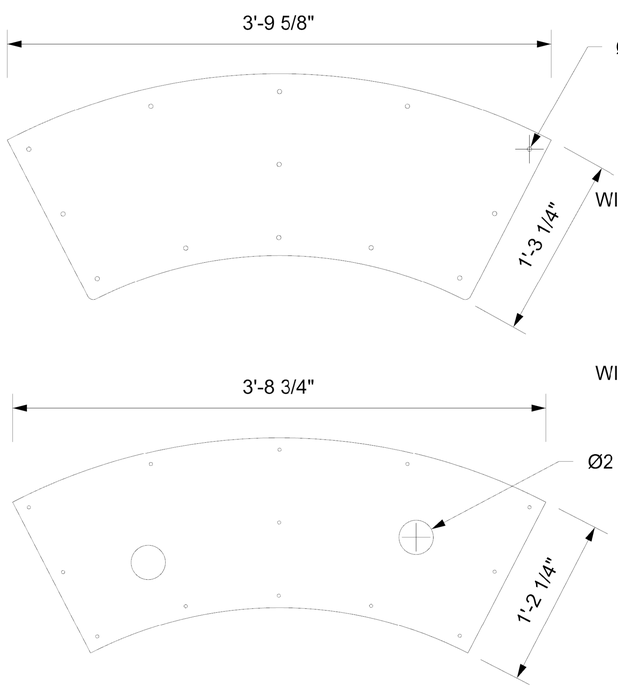

MATERIAL:
3/4" MARINE GRADE
PLYWOOD

MATERIAL:
3/16" ALUMINUM 5052
AFTER ASSEMBLED,
FINISHED WITH
PAINT (SEE S-6 AND
SEE COLOR INDEX)

1 BENCH PIECES (C-SERIES) 1:12

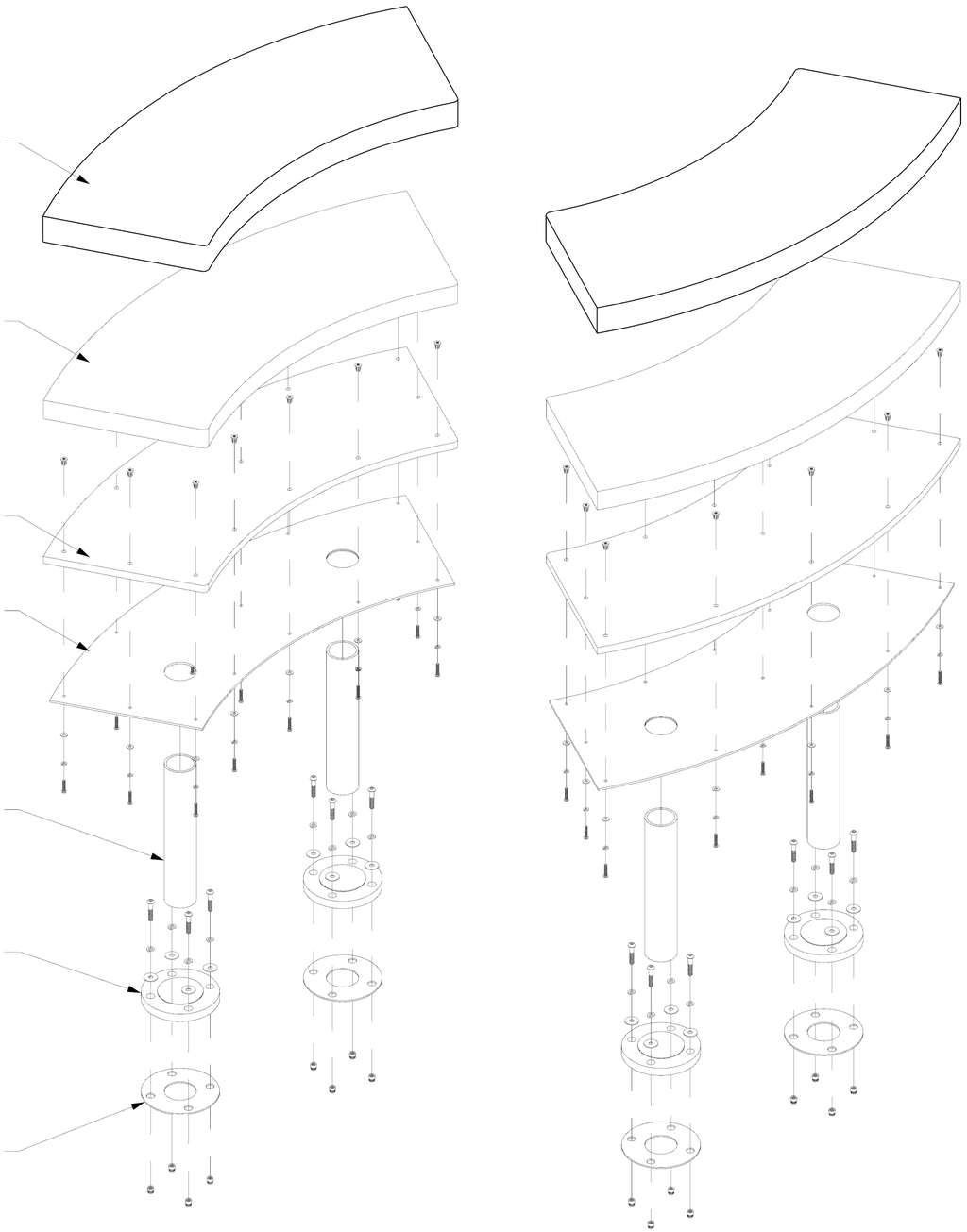

3 BENCH ASSEMBLY (C-SERIES) 1:12

NOTE: ALL CUT FILES TO BE
SUPPLIED TO WINNING BIDDER
NOTE: MUST BE COMPLETED
TO THE SATISFACTION OF
METALAB STUDIO (SEE SPECS)

NO.	ISSUE	DATE
1	ADDENDUM SET 1	1 September 2016

SAN ANTONIO RIVERBOATS
PROTOTYPE

[METALAB ARCHITECTURE]
20 N Sampson St
Houston, Texas 77003
713.426.3640
www.metalabstudio.com
info@metalabstudio.com
ARCHITECT

Gerry Mass Design
(985) 515-2263
3004 Canal Drive
New Orleans, Louisiana 70119
NAVAL ARCHITECT

SAR

BID SET
NOT FOR CONSTRUCTION

SCALE AS NOTED
SHEET SIZE: 12 X 18

BENCH
ASSEMBLY
DRAWINGS 2
C-SERIES

S-9

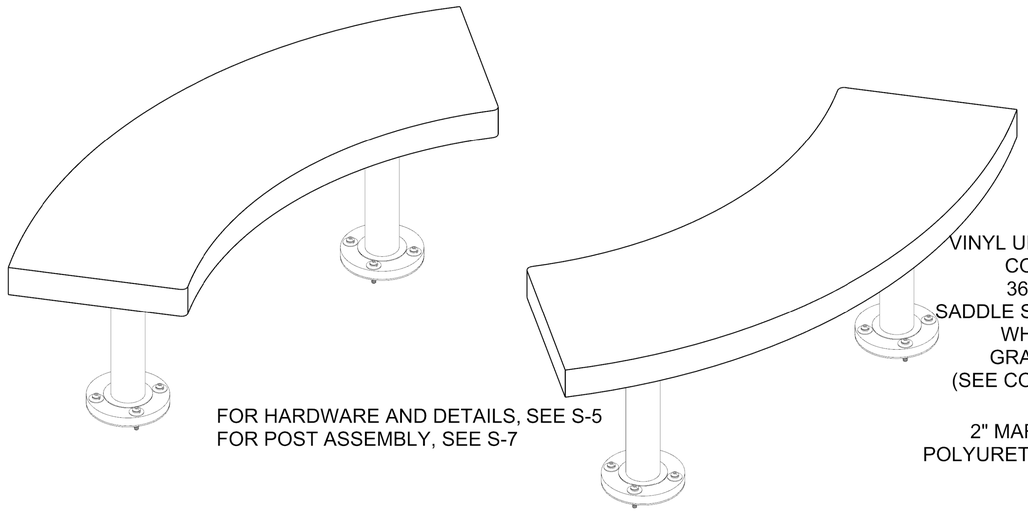

FOR HARDWARE AND DETAILS, SEE S-5
FOR POST ASSEMBLY, SEE S-7

2 BENCH ASSEMBLY (L-SERIES) 1:12

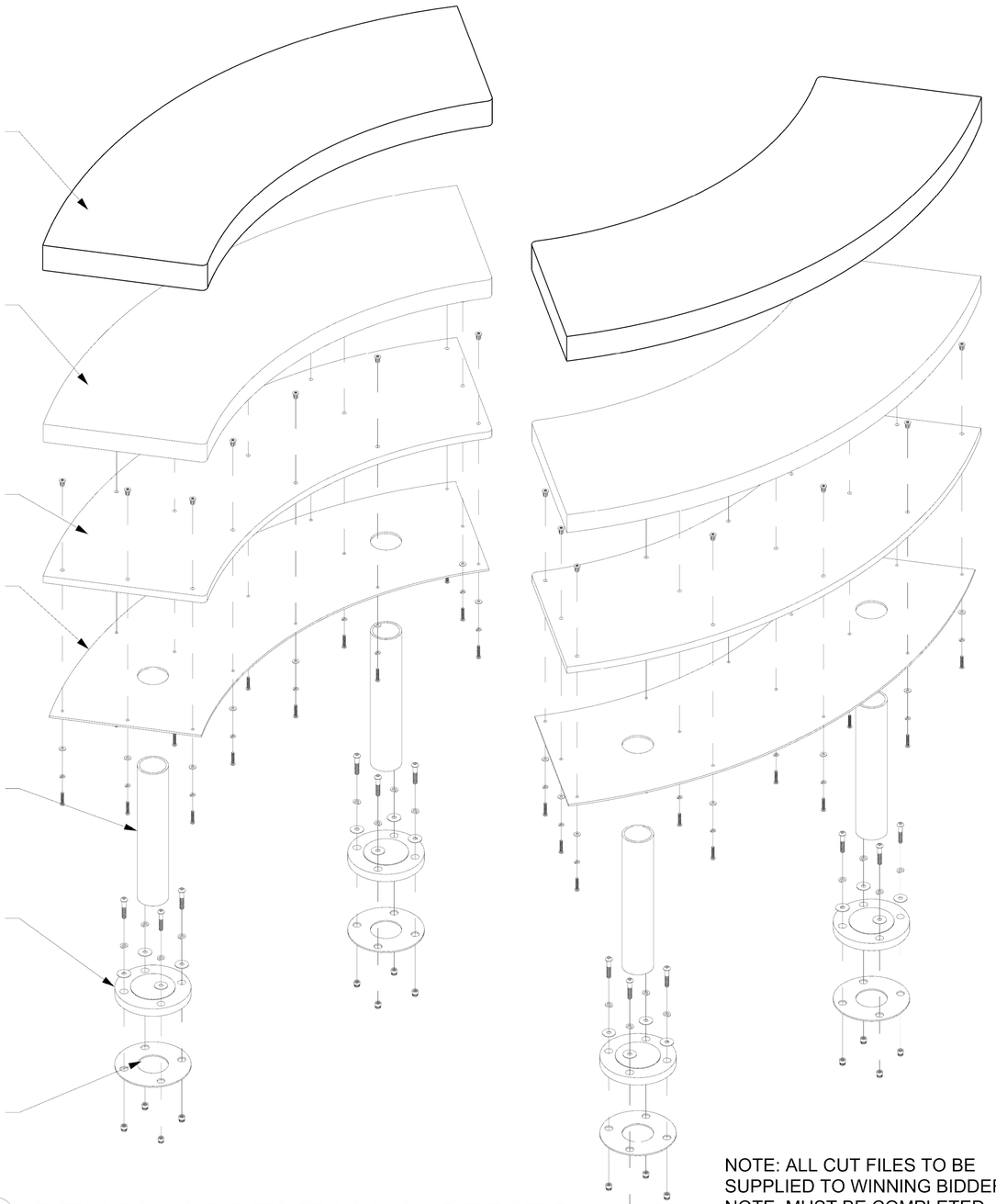

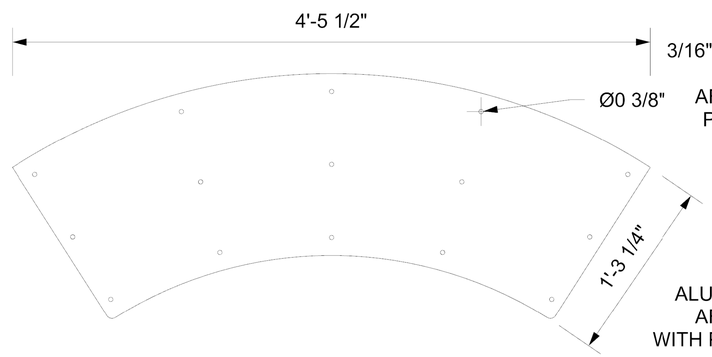

MATERIAL:
3/4" MARINE GRADE
PLYWOOD

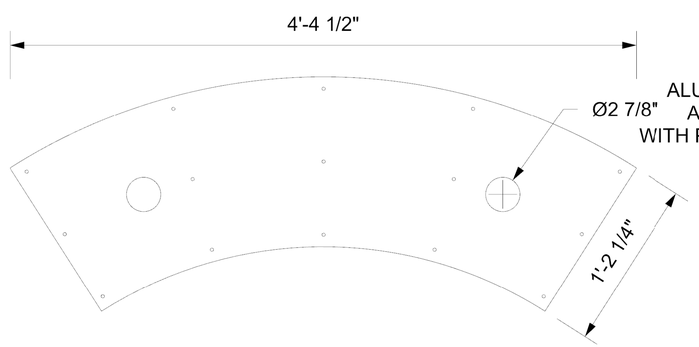

MATERIAL:
3/16" ALUMINUM 5052
AFTER ASSEMBLED,
FINISHED WITH
PAINT (SEE S-7 AND SEE
COLOR INDEX)

1 BENCH PIECES (L-SERIES) 1:12

3 BENCH ASSEMBLY (L-SERIES) 1:12

NOTE: ALL CUT FILES TO BE
SUPPLIED TO WINNING BIDDER
NOTE: MUST BE COMPLETED
TO THE SATISFACTION OF
METALAB STUDIO (SEE SPECS)

NO.	ISSUE	DATE
1	ADDENDUM SET 1	1 September 2016

SAN ANTONIO RIVERBOATS
PROTOTYPE

[METALAB ARCHITECTURE]
20 N Sampson St
Houston, Texas 77003
713.426.3640
www.metalabstudio.com
info@metalabstudio.com
ARCHITECT

Gaines Nelson Design
(985) 515-2263
30004 Cantel Drive
Ponchatoula, Louisiana 70454
NAVAL ARCHITECT

SAR

SCALE AS NOTED

SHEET SIZE: 12 X 18

BID SET
NOT FOR CONSTRUCTION

BENCH
ASSEMBLY
DRAWINGS 3
L-SERIES

S-10

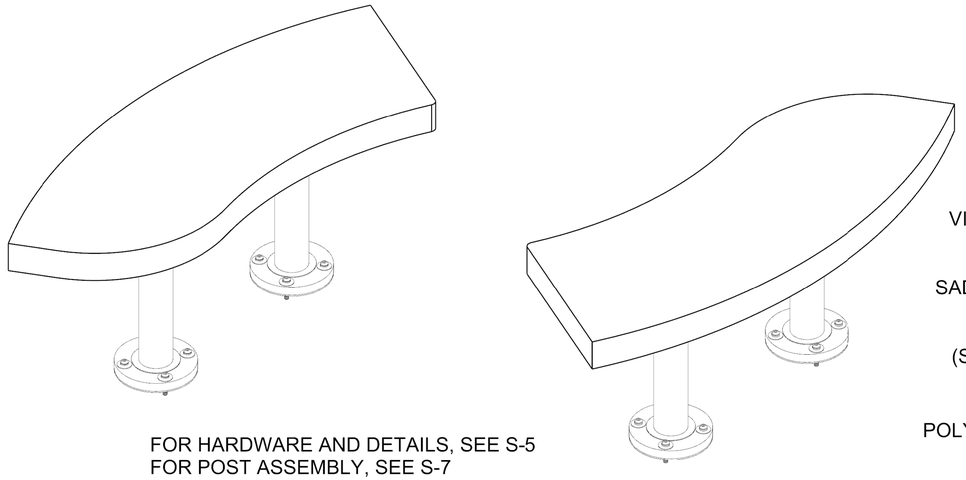

FOR HARDWARE AND DETAILS, SEE S-5
FOR POST ASSEMBLY, SEE S-7

FOR C-SERIES, ALL FABRICATION PARTS
ARE THE SAME BUT ASSEMBLY IS MIRRORED
BETWEEN LEFT AND RIGHT PER S-7

2 BENCH ASSEMBLY (B-SERIES) 1:12

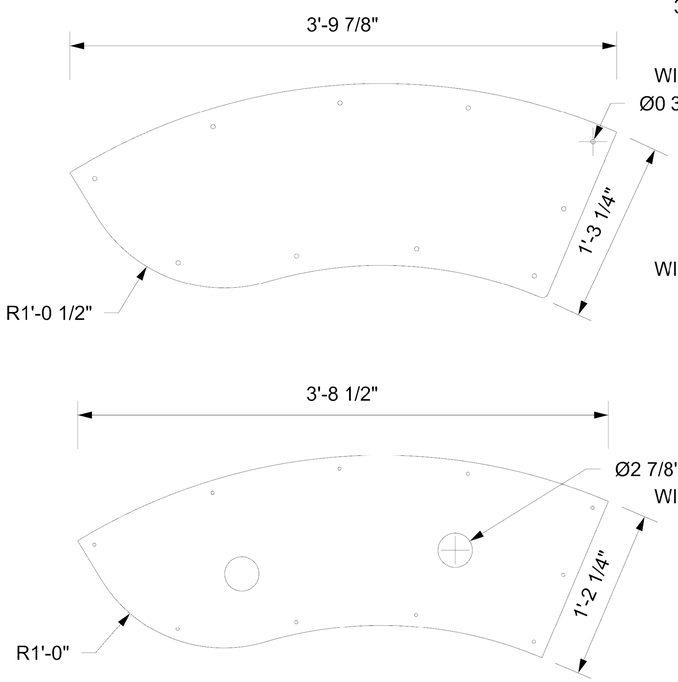

MATERIAL:
3/4" MARINE GRADE
PLYWOOD

MATERIAL:
3/16" ALUMINUM 5052
AFTER ASSEMBLED,
FINISHED WITH
PAINT (SEE S-7 AND
SEE COLOR INDEX)

1 BENCH PIECES (B-SERIES) 1:12

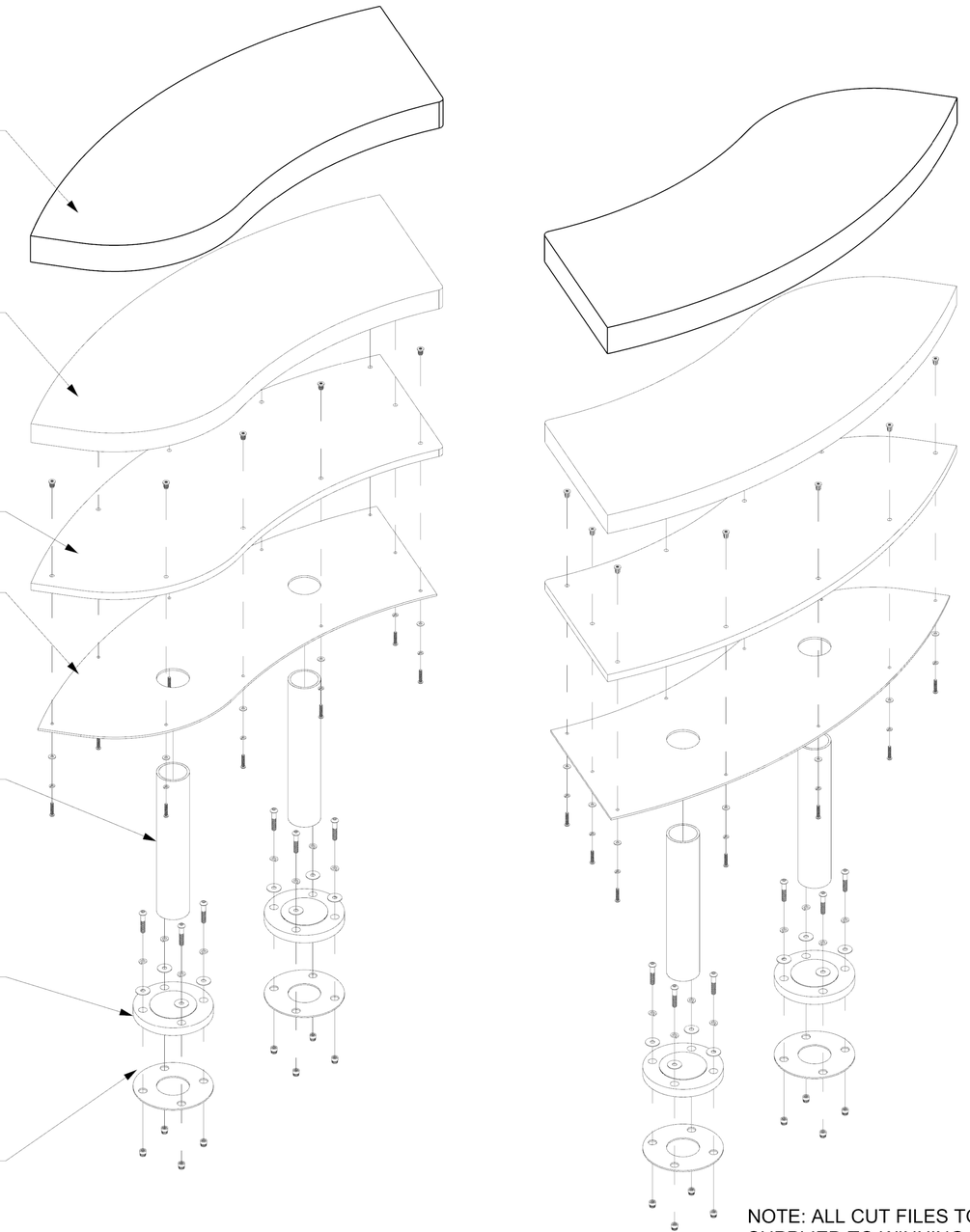

3 BENCH ASSEMBLY (B-SERIES) 1:12

NOTE: ALL CUT FILES TO BE
SUPPLIED TO WINNING BIDDER
NOTE: MUST BE COMPLETED
TO THE SATISFACTION OF
METALAB STUDIO (SEE SPECS)

NO.	ISSUE	DATE
1	ADDENDUM SET 1	1 September 2016

SAN ANTONIO RIVERBOATS
PROTOTYPE

[METALAB ARCHITECTURE]
20 N Sampson St
Houston, Texas 77003
713.426.3640
www.metalabstudio.com
info@metalabstudio.com
ARCHITECT

Cooper Nelson Design
(985) 515-2263
3004 Canal Drive
Mandeville, Louisiana 70448
NAVAL ARCHITECT

SAR

BID SET
NOT FOR CONSTRUCTION

SHEET SIZE: 12 X 18
SCALE AS NOTED

BENCH
ASSEMBLY
DRAWINGS 4
B-SERIES

S-11

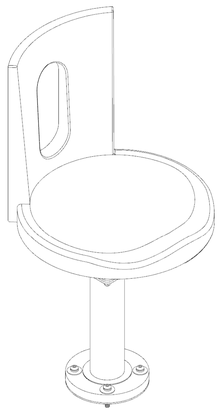

SEAT X 15 FOR GROUP TOUR (SEE S-14)
SEAT X 17 FOR 360 TOUR (SEE S-14)

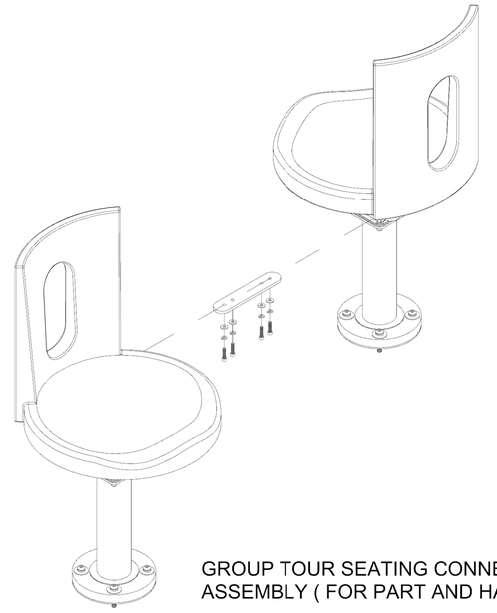

GROUP TOUR SEATING CONNECTION
ASSEMBLY (FOR PART AND HARDWARE, SEE S-13)

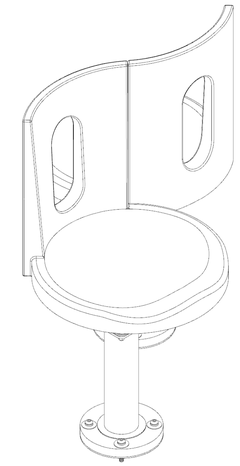

GROUP TOUR SHOWING
SEATING CONNECTED

2 SEAT SCHEDULE AND ATTACHMENT

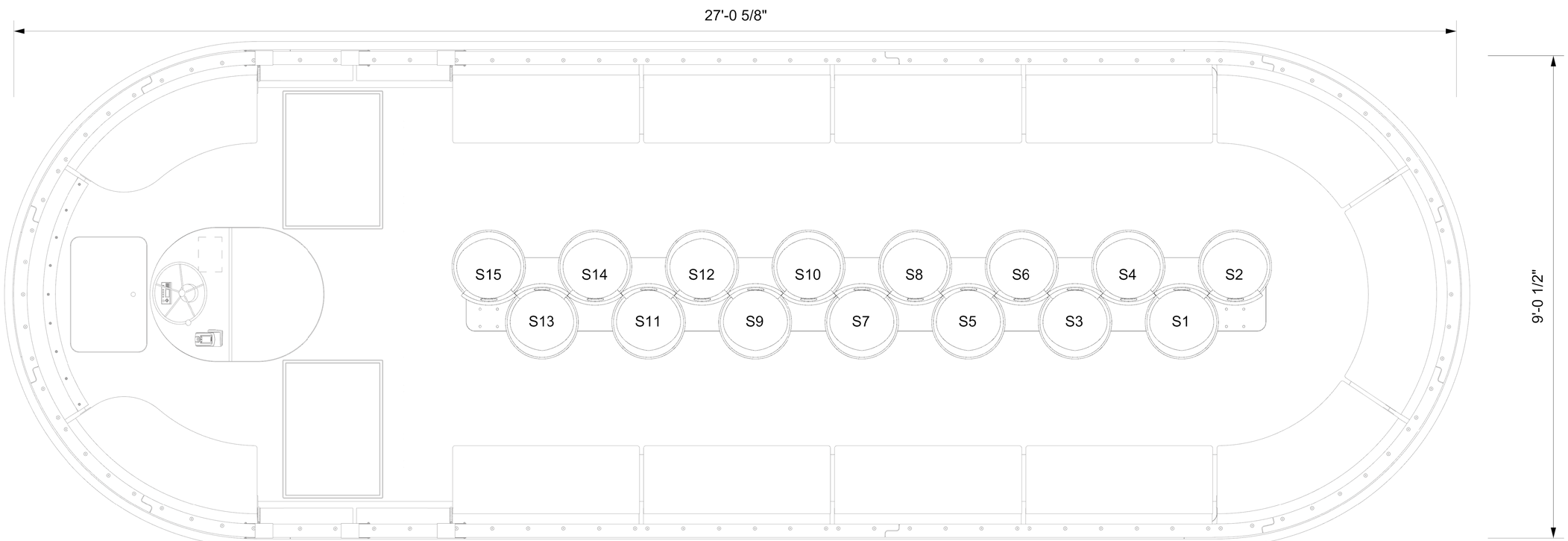

1 SEAT PLAN (TOUR) 1:24

NOTE: MUST BE COMPLETED TO THE SATISFACTION OF METALAB STUDIO (SEE SPECS)

NO.	ISSUE	DATE
1	ADDENDUM SET 1	1 September 2016

SAN ANTONIO RIVERBOATS
PROTOTYPE

[METALAB ARCHITECTURE]
20 N Sampson St
Houston, Texas 77003
713.426.3640
www.metalabstudio.com
info@metalabstudio.com
NAVAL ARCHITECT

Gauthier Naval Design
(985) 515-2263
3004 Canal Drive
Chalmette, Louisiana 70043
NAVAL ARCHITECT

SAR

BID SET
NOT FOR CONSTRUCTION

SHEET SIZE: 12 X 18
SCALE AS NOTED

CHAIR PLAN
AND SCHEDULE

S-12

CHAIR HARDWARE SCHEDULE

DRAWING	DESCRIPTION	# PER TOUR CHAIR	# PER TOUR LINK	# PER 360 CHAIR	TOTAL TOUR	TOTAL 360
	18-8 Stainless Steel Head Socket Cap Screw 1/4"-20, 1" Length 92196A542	4	4	4	116	68
	18-8 Stainless Steel Flat Washer 1/4" 0.625" OD 92141A029	12	4	12	236	204
	18-8 Stainless Steel Split Lock Washer 1/4" 0.487" OD 92146A029	8	4	8	176	136
	18-8 Stainless Steel Head Socket Cap Screw 1/4"-20, 3/4" Length 92196A540	4	0	4	60	68
	18-8 Stainless Steel Nylon Insert Locknut 1/4"-20 5/16" High 91831A029	4	0	4	60	68

ITEMS FOR CHAIR ASSEMBLY

NOTE: USE IRONTITE OR EQUAL ON ALL STAINLESS FASTENERS TO PREVENT SEIZING AND GALLING

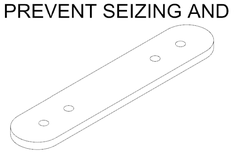

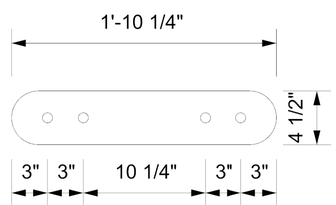

ITEM: Connector Piece to be Fabrication
MATERIAL: Aluminum 5052 Bar 3/16" Thick
AMT: 2 per Chair Except End (14 Total for Tour)
See S-12 for more information about assembly

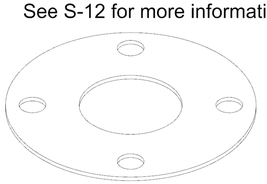

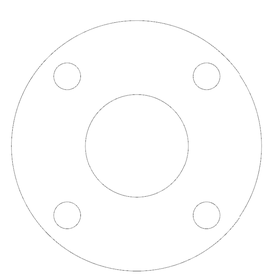

ITEM: Compressible Buna-N Flange Gasket 2 1/2" Pipe 1/8" Thick or Waterjet Equivalent
MATERIAL: Aluminum 5052
AMT: 1 per Chair (15 Total for Tour, 17 Total for 360)
See S-13 for more information about assembly

1 CHAIR HARDWARE SCHEDULE

ITEMS FOR CHAIR ASSEMBLY (CONT.)

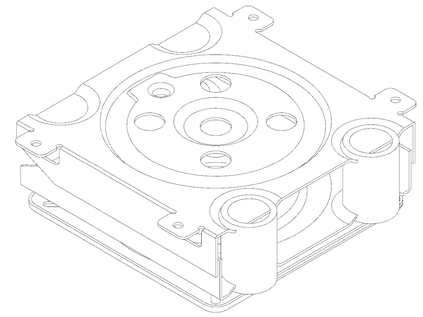

ITEM: Woodtek Swivel Rocker Mechanism Black 8-1/2" wide x 9-1/4" long (164-231)
MATERIAL: Steel with Black ED (e-coat) finish
AMT: 1 per Chair (15 Total for Tour, 17 Total for 360)
See S-13 for more information about assembly

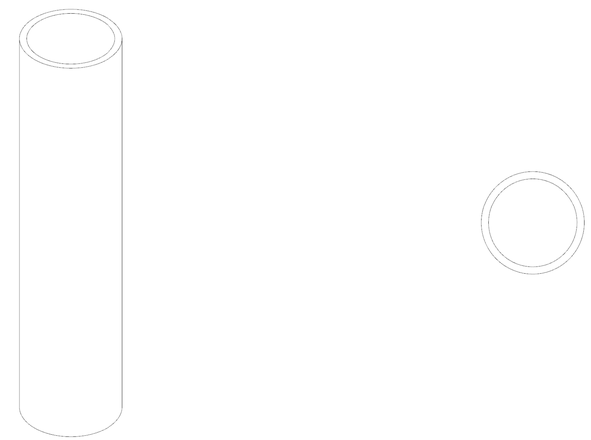

ITEM: 2 1/2" Pipe 1' 5/8" Long
MATERIAL: Aluminum 5052 with Painted Finish See Color Index
AMT: 1 per Chair (15 Total for Tour, 17 Total for 360)
See S-13 for more information about assembly

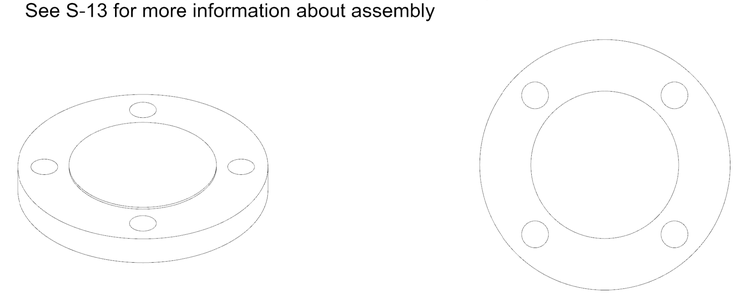

ITEM: 2 1/2" Bolt Circle Blind Flange or Waterjet Equivalent
MATERIAL: Aluminum 5052 with Painted Finish See Color Index
AMT: 1 per Chair (15 Total for Tour, 17 Total for 360)
See S-13 for more information about assembly

2 CHAIR DETAILS

NO.	ISSUE	DATE
1	ADDENDUM SET 1	1 September 2016

SAN ANTONIO RIVERBOATS
PROTOTYPE

[METALAB ARCHITECTURE]
20 N Sampson St
Houston, Texas 77003
713.426.3640
www.metalabstudio.com
info@metalabstudio.com
ARCHITECT

Gensler Texas Design
(983.713.1.231)
3004 Cutrer Drive,
Shreveport, Texas
Louisiana 70509
NAVAL ARCHITECT

SAR

SHEET SIZE: 12 X 18
SCALE AS NOTED

BID SET
NOT FOR CONSTRUCTION

CHAIR HARDWARE SCHEDULE AND CHAIR DETAILS

S-13

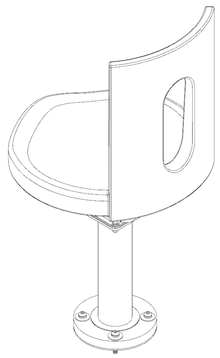

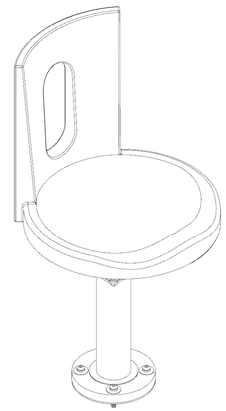

FOR HARDWARE AND DETAILS, SEE S-13

2 CHAIR ASSEMBLY 1:12

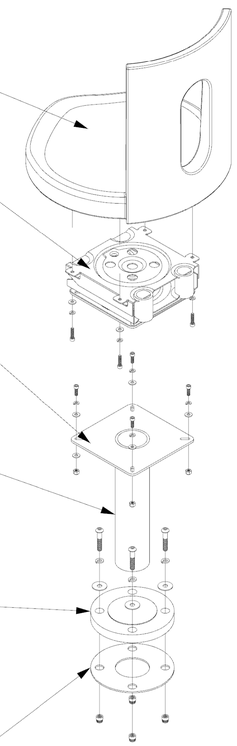

4 CHAIR ASSEMBLY 1:12

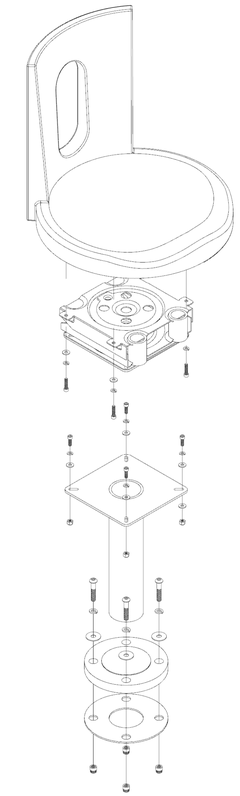

MATERIAL:
ROTO MOLDED
PLASTIC SEAT
COLOR TO MATCH
BENCH FABRIC
(SEE COLOR INDEX)
PROCURE AS DETAILED
ON SPECIFICATIONS

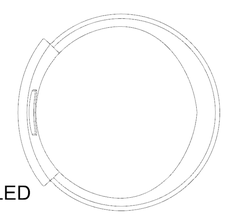

SEAT PLAN VIEW

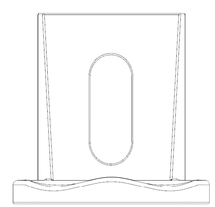

SEAT ELEVATION VIEW

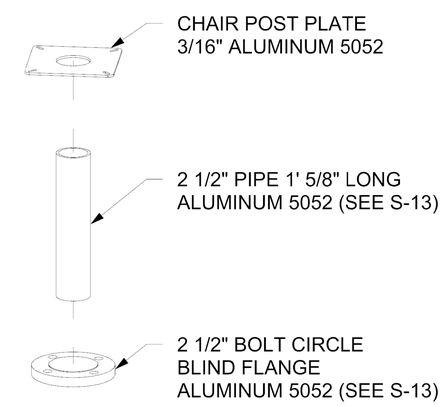

MATERIAL:
3/16" ALUMINUM 5052
AFTER ASSEMBLED,
FINISHED WITH
PAINT (SEE COLOR INDEX)

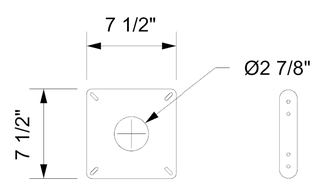

POST PLATE

CONNECTOR (GROUP TOUR ONLY)
SEE S-13 FOR DIMENSIONS

1 CHAIR PIECES 1:12

3 CHAIR POST ASSEMBLY 1:12

NOTE: ALL CUT FILES TO BE
SUPPLIED TO WINNING BIDDER
NOTE: MUST BE COMPLETED
TO THE SATISFACTION OF
METALAB STUDIO (SEE SPECS)

NO.	ISSUE	DATE
1	ADDENDUM SET 1	1 September 2016

SAN ANTONIO RIVERBOATS
PROTOTYPE

[METALAB ARCHITECTURE]
20 N Sampson St
Houston, Texas 77003
713.426.3640
www.metalabstudio.com
info@metalabstudio.com
ARCHITECT

Gaspe Nelson Design
(985) 515-2263
3004 Canal Drive
New Orleans, Louisiana 70119
NAVAL ARCHITECT

SAR

SHEET SIZE: 12 X 18
SCALE AS NOTED

BID SET
NOT FOR CONSTRUCTION

CHAIR ASSEMBLY
DRAWINGS

S-14

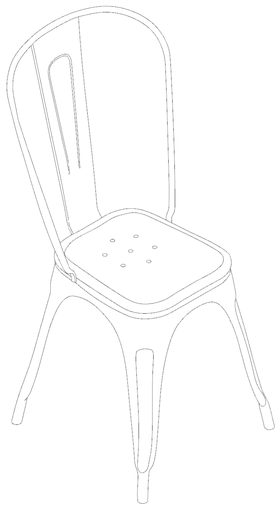

REPRODUCTION TOLIX CHAIR X 18
FOR NONSTATIONARY SEATING
FLAST FURNITURE METAL CHAIR COLOR: SILVER

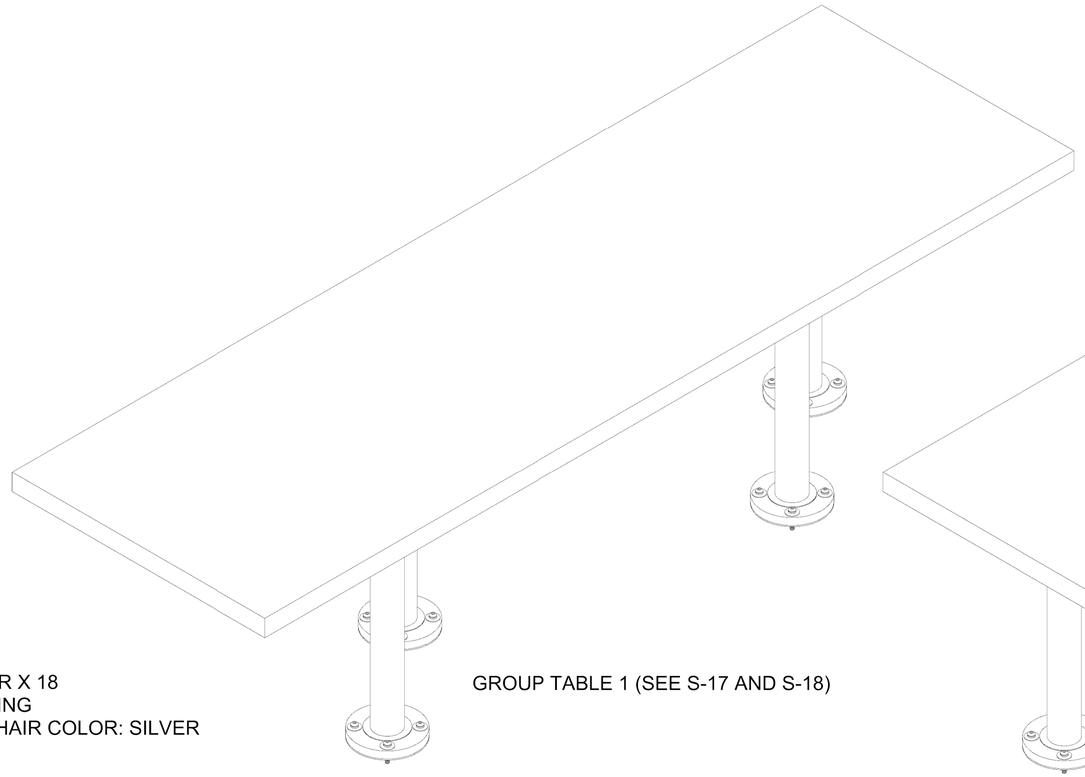

GROUP TABLE 1 (SEE S-17 AND S-18)

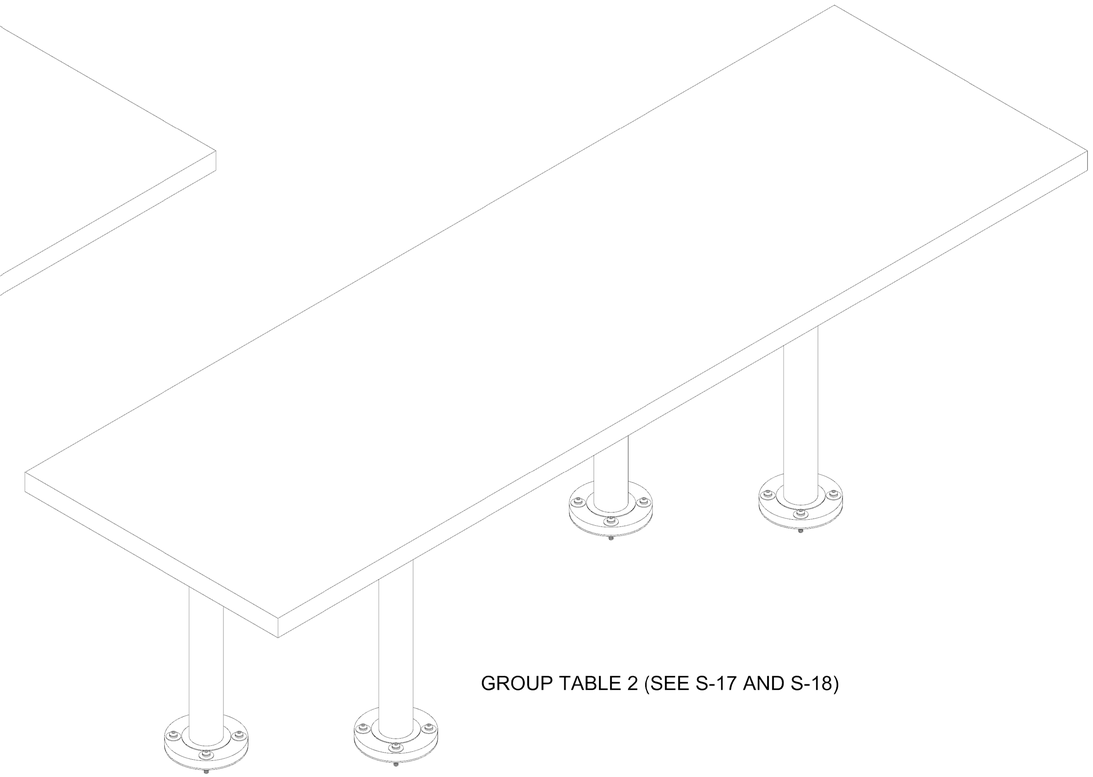

GROUP TABLE 2 (SEE S-17 AND S-18)

2 DINING SCHEDULE (GROUP SEATING) 1:24

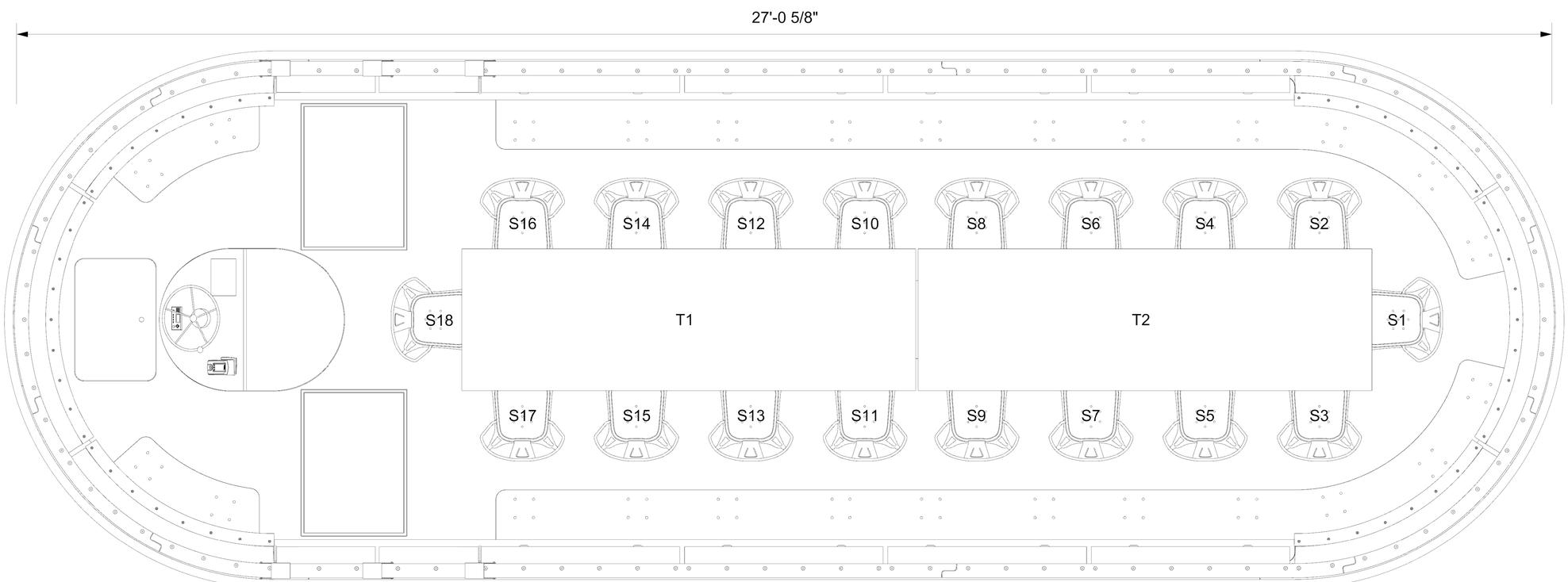

1 DINING PLAN (GROUP SEATING) 1:24

NOTE: MUST BE COMPLETED TO THE SATISFACTION OF METALAB STUDIO (SEE SPECS)

NO.	ISSUE	DATE
1	ADDENDUM SET 1	1 September 2016

SAN ANTONIO RIVERBOATS
PROTOTYPE

[METALAB ARCHITECTURE]
20 N Sampson St
Houston, Texas 77003
713.426.3640
www.metalabstudio.com
info@metalabstudio.com
ARCHITECT

Gaines Nelson Design
(985) 515-1263
3004 Canal Drive,
New Orleans, Louisiana 70119
NAVAL ARCHITECT

SAR

BID SET
NOT FOR CONSTRUCTION

SHEET SIZE: 12 X 18
SCALE AS NOTED

GROUP DINING PLAN AND SCHEDULE

S-15

GROUP DINING HARDWARE SCHEDULE

DRAWING	DESCRIPTION	TOTAL
	18-8 Stainless Steel Round Head Screw for Wood Slotted No. 8 1" Long 91607A199	64
	Plastic Head Thumb Screw Black Rosette Head 1/4"-20 3/8" Long 91185A801	16

ITEMS FOR GROUP DINING ASSEMBLY

NOTE: USE IRONTITE OR EQUAL ON ALL STAINLESS
FASTENERS TO PREVENT SEIZING AND GALLING

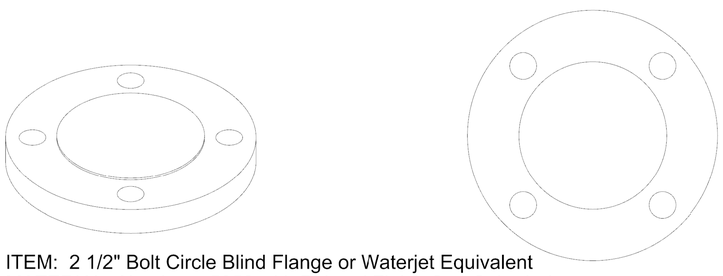

ITEM: 2 1/2" Bolt Circle Blind Flange or Waterjet Equivalent
MATERIAL: Aluminum 5052 with Painted Finish See Color Index
AMT: 2 Per Support Plate (8 Total)
See S-17 for more information about assembly

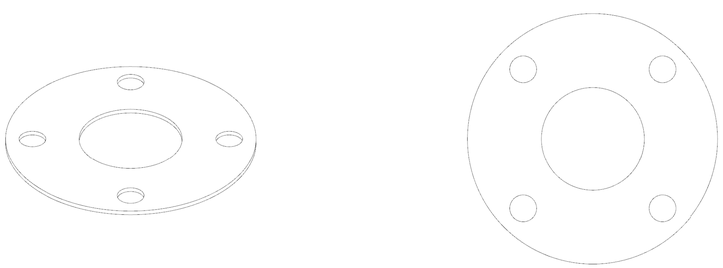

ITEM: Compressible Buna-N Flange Gasket 2 1/2" Pipe 1/8" Thick or Waterjet Equivalent
MATERIAL: Aluminum 5052
AMT: 2 per Support Plate (8 Total)
See S-17 for more information about assembly

ITEMS FOR GROUP DINING ASSEMBLY (CONT.)

ITEM: 2 " Pipe 5 1/2" Long
MATERIAL: Aluminum 5052 with Painted Finish See Color Index
AMT: 2 per Support Plate (8 Total)
See S-17 for more information about assembly

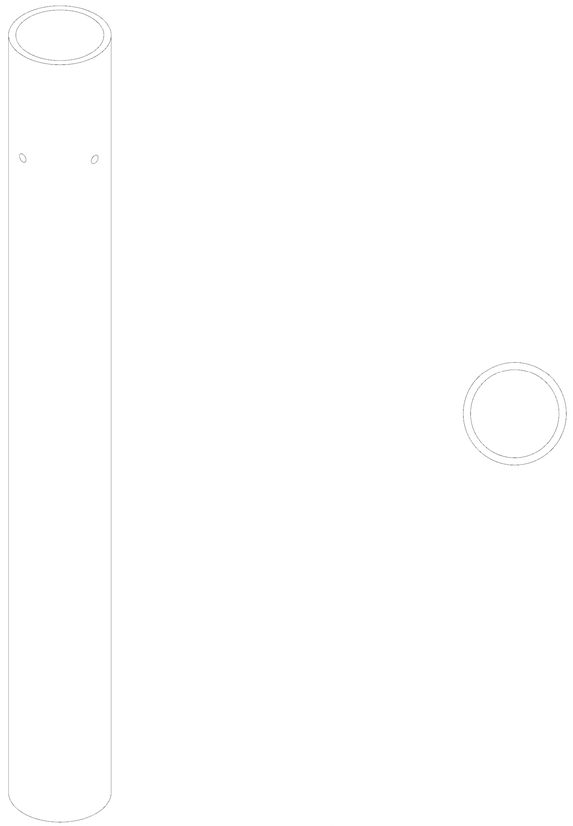

ITEM: 2 1/2" Pipe 2' 2" Long with Two Holes for 1/4"-20 Drilled at 90 deg. angle 3 1/2" from Top
MATERIAL: Aluminum 5052 with Painted Finish See Color Index
AMT: 2 per Support Plate (8 Total)
See S-17 for more information about assembly

1 GROUP DINING HARDWARE SCHEDULE

2 GROUP DINING DETAILS

NO.	ISSUE	DATE
1	ADDENDUM SET 1	1 September 2016

SAN ANTONIO RIVERBOATS
PROTOTYPE

[METALAB ARCHITECTURE]
20 N Sampson St
Houston, Texas 77003
713.426.3640
www.metalabstudio.com
info@metalabstudio.com
ARCHITECT

Gaston Nelson Design
(985) 515-2263
3004 Canal Drive,
New Orleans, La
Louisiana 70300
NAVAL ARCHITECT

SAR

BID SET
NOT FOR CONSTRUCTION

SCALE AS NOTED
SHEET SIZE: 12 X 18

GROUP DINING HARDWARE SCHEDULE AND DETAILS

S-16

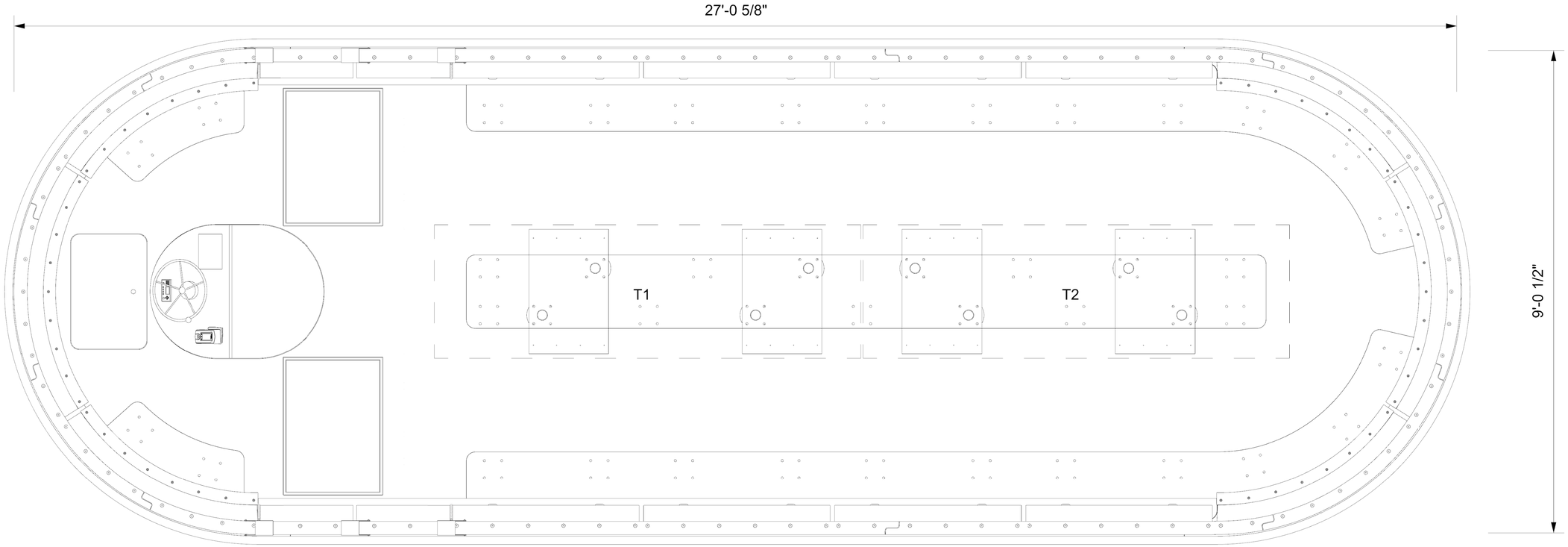

2 GROUP DINING ASSEMBLY 1:24

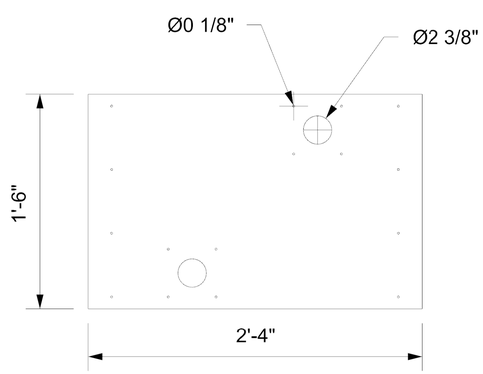

MATERIAL:
3/16" ALUMINUM 5052
AFTER ASSEMBLED,
FINISHED WITH
PAINT (SEE COLOR INDEX)

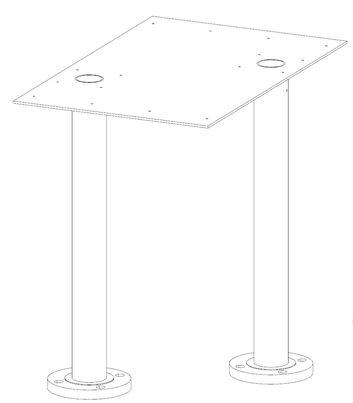

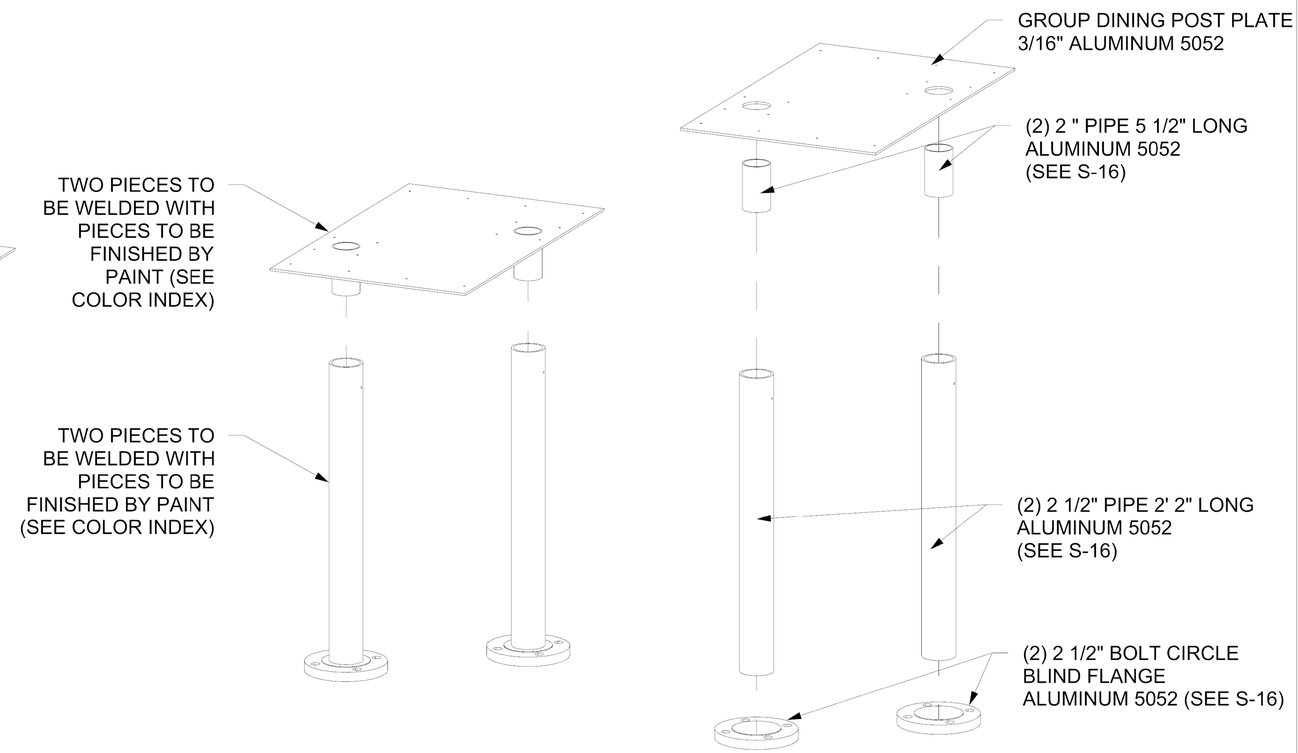

1 GROUP DINING POST ASSEMBLY 1:12

NOTE: ALL CUT FILES TO BE SUPPLIED TO WINNING BIDDER
NOTE: MUST BE COMPLETED TO THE SATISFACTION OF METALAB STUDIO (SEE SPECS)

NO.	ISSUE	DATE
1	ADDENDUM SET 1	1 September 2016

SAN ANTONIO RIVERBOATS
PROTOTYPE

[METALAB ARCHITECTURE]
20 N Sampson St
Houston, Texas 77003
713.426.3640
www.metalabstudio.com
info@metalabstudio.com
ARCHITECT

Gaspe Noble Design
(985) 515-2263
3004 Canal Drive,
New Orleans, Louisiana 70119
NAVAL ARCHITECT

SAR

BID SET
NOT FOR CONSTRUCTION

SHEET SIZE: 12 X 18
SCALE AS NOTED

GROUP DINING POST ASSEMBLY DRAWINGS

S-17

FOR HARDWARE AND DETAILS, SEE S-16
FOR POST ASSEMBLY, SEE S-17

FOR GROUP TABLES, ALL FABRICATION PARTS
ARE THE SAME EXCEPT HOLES IN TOP WOOD PIECE
WHICH ARE MIRRORED BETWEEN TABLE 1 AND 2
AND POSTS ARE ROTATED TO FIT HOLES

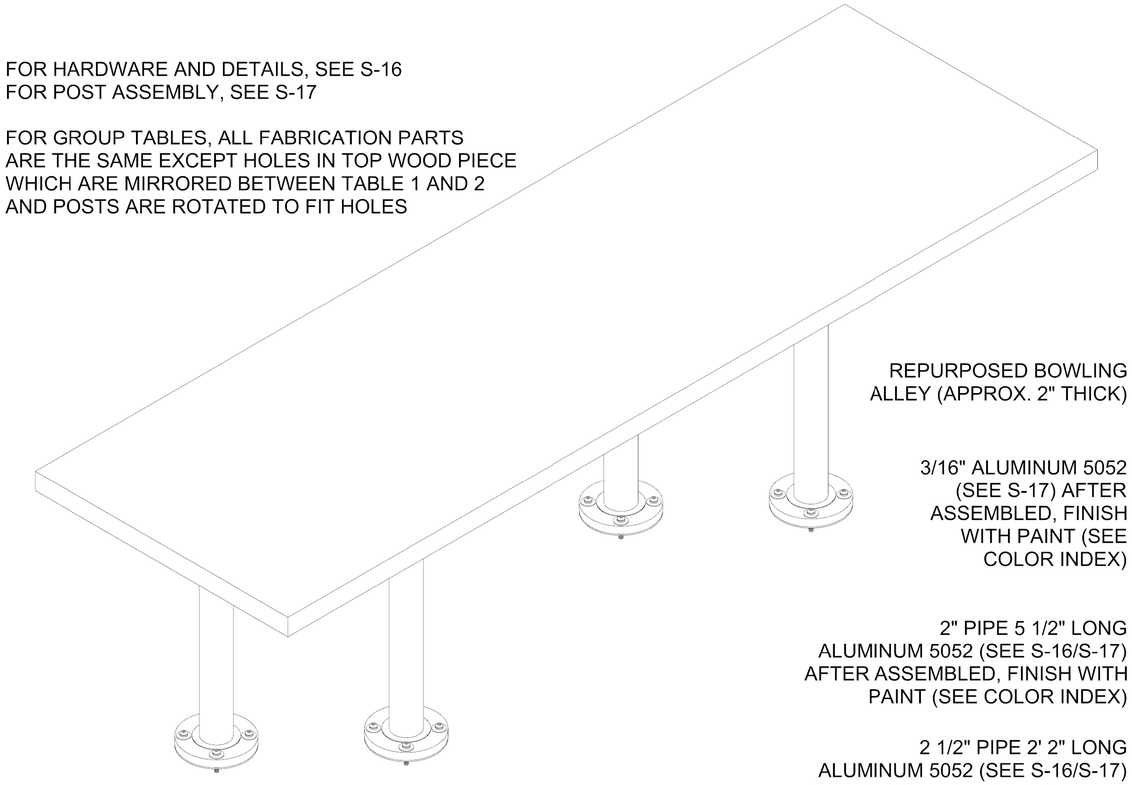

TABLE TOP MATERIAL:
REPURPOSED BOWLING
ALLEY (APPROX. 2" THICK)
SANDED FLUSH AND CUT
TO 8' SECTIONS; FINISHED
WITH LOBO OR APPROVED EQUAL

2 GROUP TABLE ASSEMBLY 1:12

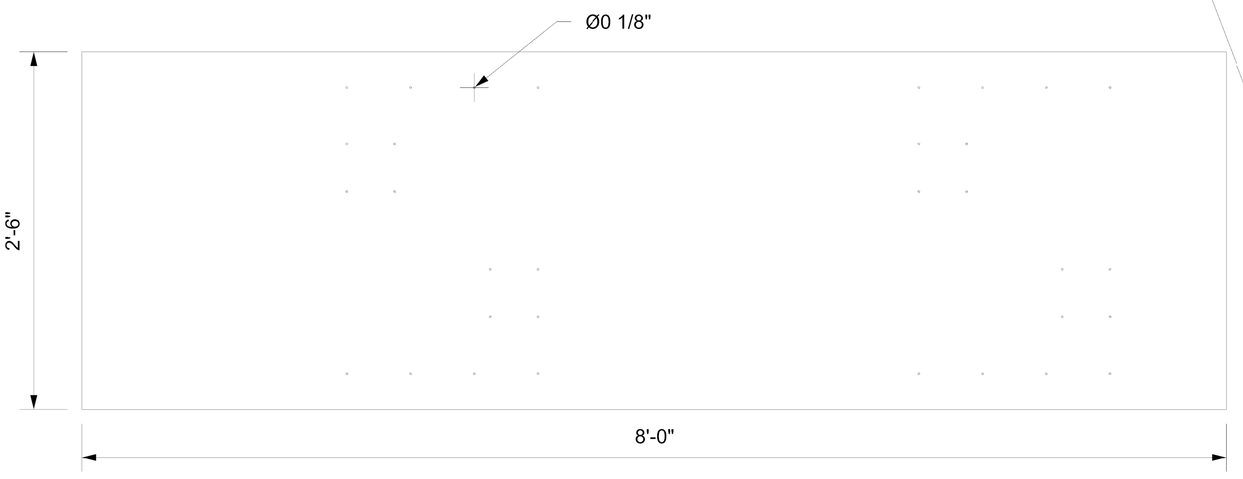

1 GROUP TABLE PIECES 1:12

REPURPOSED BOWLING
ALLEY (APPROX. 2" THICK)

3/16" ALUMINUM 5052
(SEE S-17) AFTER
ASSEMBLED, FINISH
WITH PAINT (SEE
COLOR INDEX)

2" PIPE 5 1/2" LONG
ALUMINUM 5052 (SEE S-16/S-17)
AFTER ASSEMBLED, FINISH WITH
PAINT (SEE COLOR INDEX)

2 1/2" PIPE 2' 2" LONG
ALUMINUM 5052 (SEE S-16/S-17)
AFTER ASSEMBLED, FINISH WITH
PAINT (SEE COLOR INDEX)

2 1/2" BOLT CIRCLE BLIND FLANGE
ALUMINUM 5052 (SEE S-16/S-17)
AFTER ASSEMBLED, FINISH
WITH PAINT (SEE COLOR INDEX)

GASKET 2 1/2" PIPE
ALUMINUM 5052 (SEE S-16)

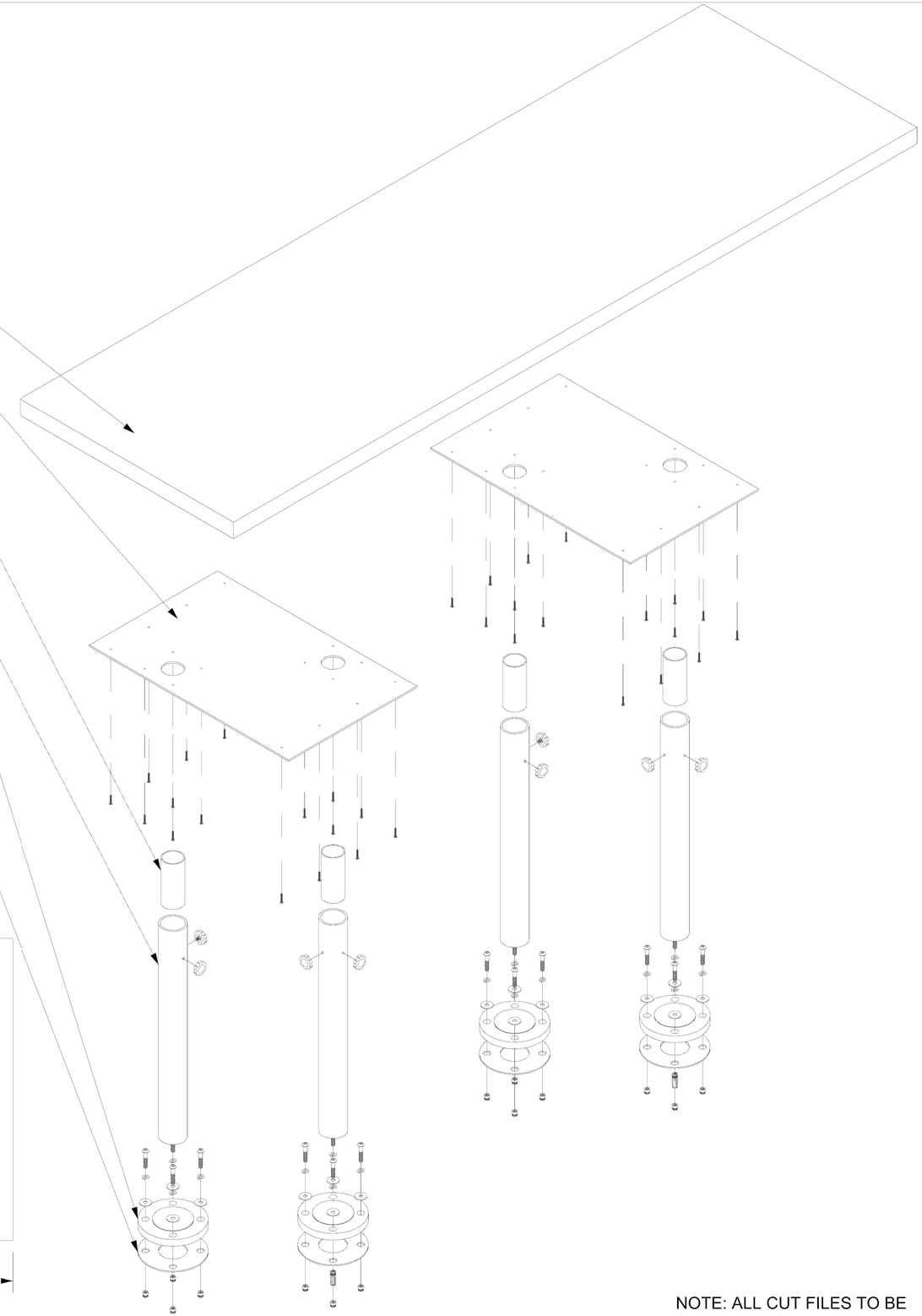

3 GROUP TABLE ASSEMBLY 1:12

NOTE: ALL CUT FILES TO BE
SUPPLIED TO WINNING BIDDER
NOTE: MUST BE COMPLETED
TO THE SATISFACTION OF
METALAB STUDIO (SEE SPECS)

NO.	ISSUE	DATE
1	ADDENDUM SET 1	1 September 2016

SAN ANTONIO RIVERBOATS
PROTOTYPE

[METALAB ARCHITECTURE]
20 N Sampson St
Houston, Texas 77003
713.426.3640
www.metalabstudio.com
info@metalabstudio.com
ARCHITECT

Gaspe Naval Design
(985) 515-2263
3004 Canal Drive
Lake Charles, Louisiana 70605
NAVAL ARCHITECT

SAR

SHEET SIZE: 12 X 18
SCALE AS NOTED

BID SET
NOT FOR CONSTRUCTION

GROUP DINING
ASSEMBLY
DRAWINGS

S-18

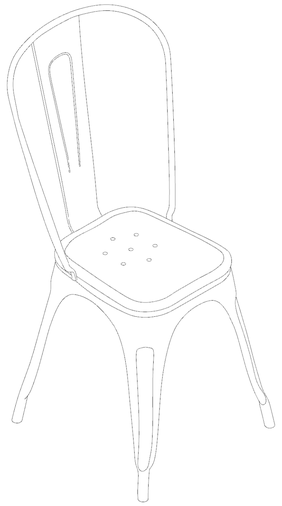

REPRODUCTION TOLIX CHAIR X 14
FOR NONSTATIONARY SEATING
FLASH FURNITURE METAL CHAIR COLOR: SILVER
FOR BENCH SEATING, SEE S-9 AND S-10

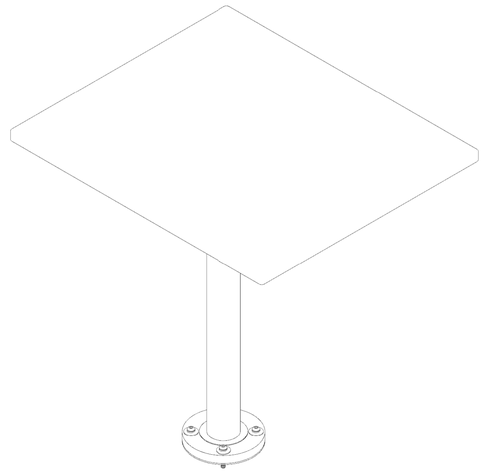

SHORT TABLE X 4 (SEE S-21, S-22, AND S-23)
S-SERIES

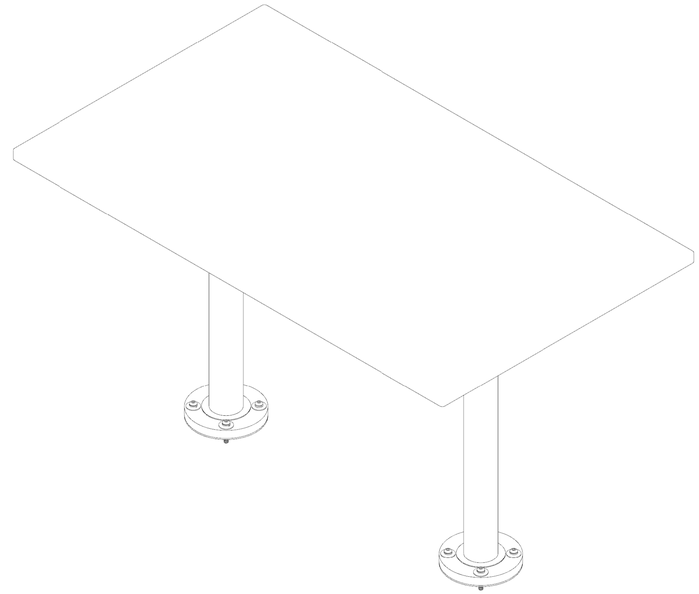

LONG TABLE X 2 (SEE S-21, S-22, AND S-24)
L-SERIES

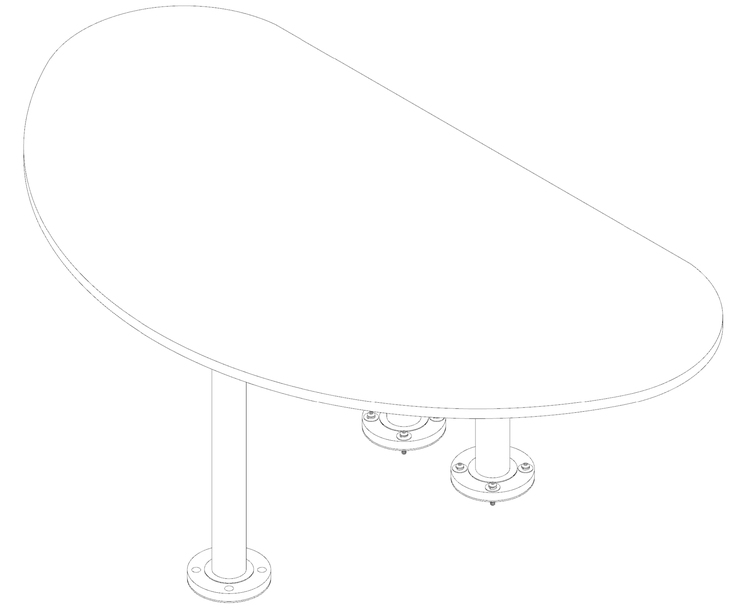

BACK TABLE X 1 (SEE S-21, S-22, AND S-25)
B-SERIES

2 BISTRO DINING SCHEDULE 1:24

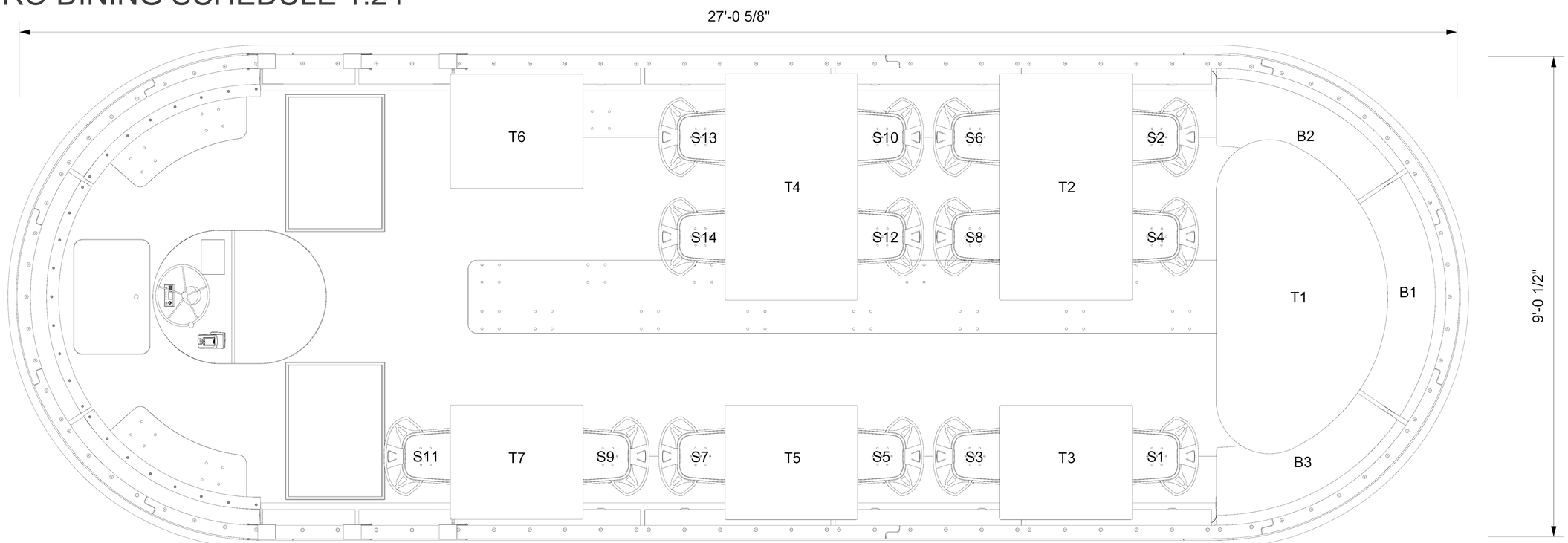

1 DINING PLAN (BISTRO SEATING) 1:24

NOTE: MUST BE COMPLETED TO THE SATISFACTION OF METALAB STUDIO (SEE SPECS)

NO.	ISSUE	DATE
1	ADDENDUM SET 1	1 September 2016

SAN ANTONIO RIVERBOATS
PROTOTYPE

[METALAB ARCHITECTURE]
20 N Sampson St
Houston, Texas 77003
713.426.3640
www.metalabstudio.com
info@metalabstudio.com
ARCHITECT

Gaines Nelson Design
(985) 515-1263
3004 Canal Drive,
Lake Charles, Louisiana 70605
NAVAL ARCHITECT

SAR

BID SET
NOT FOR CONSTRUCTION

SHEET SIZE: 12 X 18
SCALE AS NOTED

BISTRO DINING PLAN AND SCHEDULE

S-19

SPLIT DINING HARDWARE SCHEDULE

DRAWING	DESCRIPTION	# PER SHORT TABLE	# PER LONG TABLE	# PER BACK TABLE	TOTAL
	Plastic Head Thumb Screw Black Rosette Head 1/4"-20 3/8" Long 91185A801	2	4	6	22

ITEMS FOR BISTRO DINING ASSEMBLY

NOTE: USE IRONTITE OR EQUAL ON ALL STAINLESS FASTENERS TO PREVENT SEIZING AND GALLING

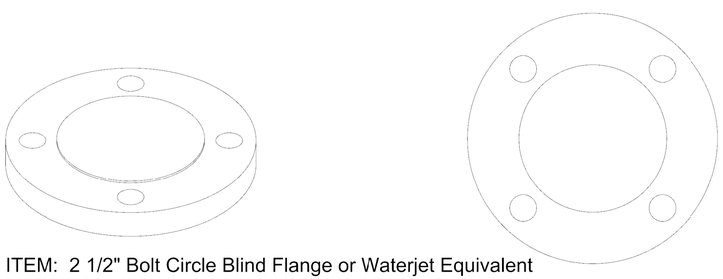

ITEM: 2 1/2" Bolt Circle Blind Flange or Waterjet Equivalent
MATERIAL: Aluminum 5052 with Painted Finish See Color Index
AMT: 1 Per S-Series, 2 Per L-Series, 3 Per B-Series (11 Total)
See S-21 for more information about assembly

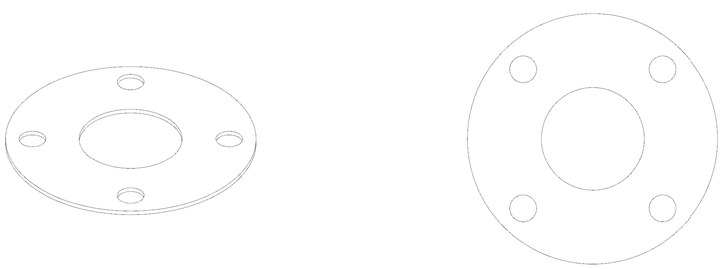

ITEM: Compressible Buna-N Flange Gasket 2 1/2" Pipe 1/8" Thick or Waterjet Equivalent
MATERIAL: Aluminum 5052
AMT: 1 Per S-Series, 2 Per L-Series, 3 Per B-Series (11 Total)
See S-21 for more information about assembly

1 BISTRO DINING HARDWARE SCHEDULE

ITEMS FOR SPLIT DINING ASSEMBLY (CONT.)

ITEM: 2 " Pipe 5 1/2" Long
MATERIAL: Aluminum 5052 with Painted Finish See Color Index
AMT: 1 Per S-Series, 2 Per L-Series, 3 Per B-Series (11 Total)
See S-21 for more information about assembly

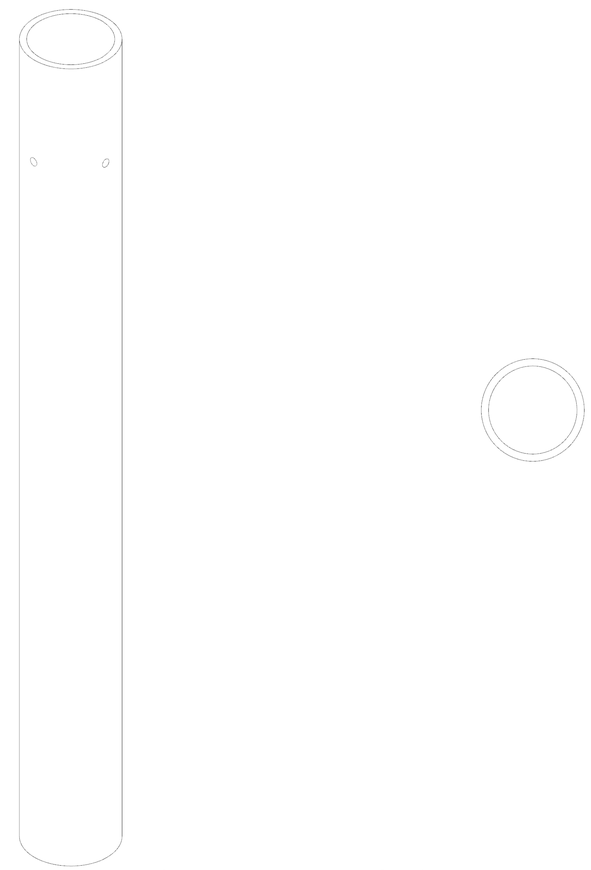

ITEM: 2 1/2" Pipe 2' 3 1/2" Long with Two Holes for 1/4"-20 Drilled at 90 deg. angle 3 1/2" from Top
MATERIAL: Aluminum 5052 with Painted Finish See Color Index
AMT: 1 Per S-Series, 2 Per L-Series, 3 Per B-Series (11 Total)
See S-21 for more information about assembly

2 BISTRO DINING DETAILS

NO.	ISSUE	DATE
1	ADDENDUM SET 1	1 September 2016

SAN ANTONIO RIVERBOATS
PROTOTYPE

[METALAB ARCHITECTURE]
20 N Sampson St
Houston, Texas 77003
713.426.3640
www.metalabstudio.com
info@metalabstudio.com
ARCHITECT

Gwen Nolan Design
(985) 515-2263
3004 Canal Drive
Mandeville, Louisiana 70448
NAVAL ARCHITECT

SAR

BID SET
NOT FOR CONSTRUCTION

SCALE AS NOTED
SHEET SIZE: 12 X 18

BISTRO DINING HARDWARE SCHEDULE AND DETAILS

S-20

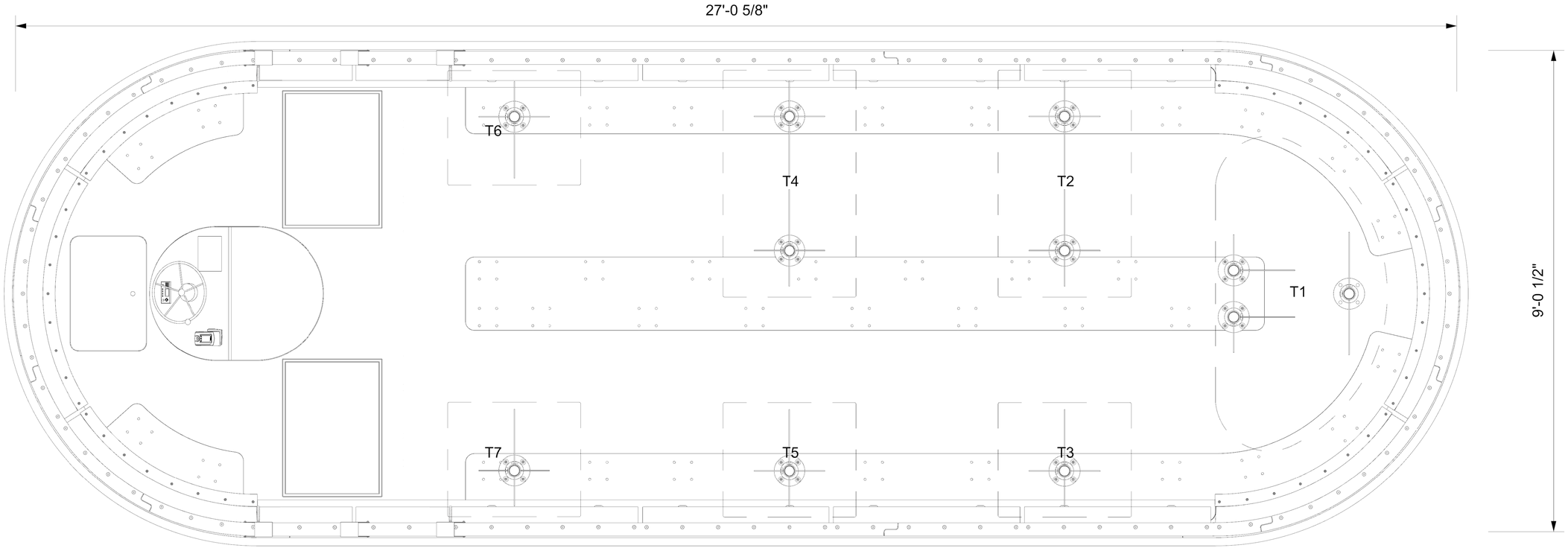

2 BISTRO DINING ASSEMBLY 1:24

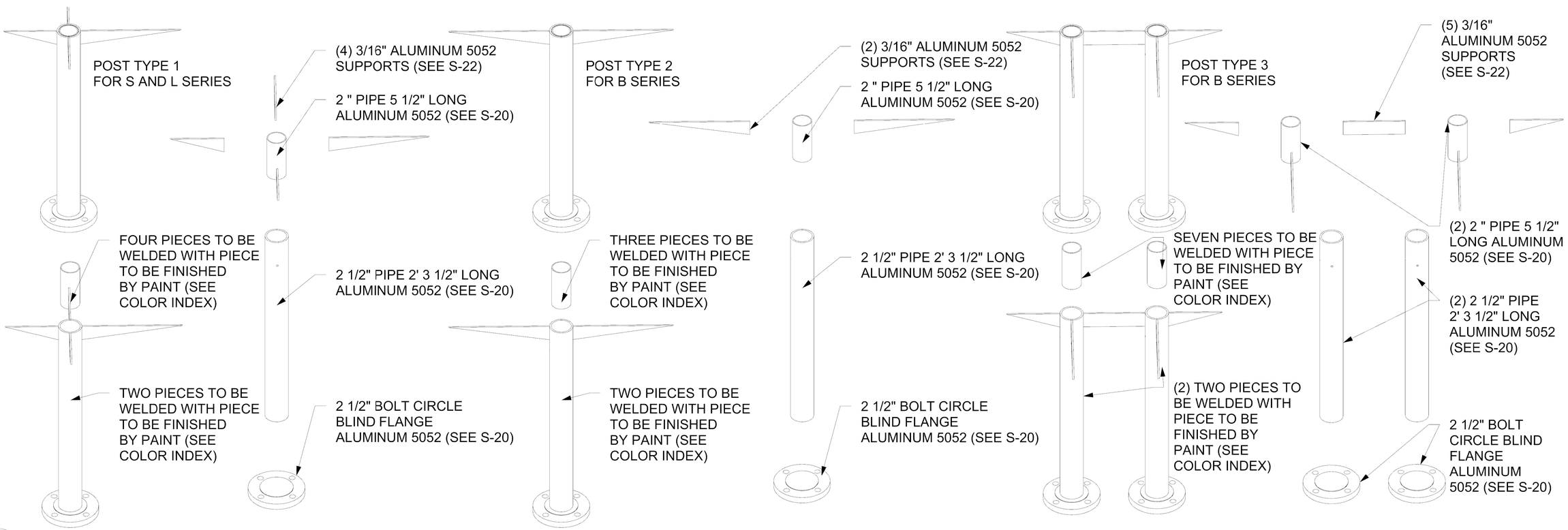

1 BISTRO DINING POST ASSEMBLY 1:12

NOTE: ALL CUT FILES TO BE SUPPLIED TO WINNING BIDDER
NOTE: MUST BE COMPLETED TO THE SATISFACTION OF METALAB STUDIO (SEE SPECS)

NO.	ISSUE	DATE
1	ADDENDUM SET 1	1 September 2016

SAN ANTONIO RIVERBOATS
PROTOTYPE

[METALAB ARCHITECTURE]
20 N Sampson St
Houston, Texas 77003
713.426.3640
www.metalabstudio.com
info@metalabstudio.com
ARCHITECT

Gwen Nelson Design
(985) 515-2303
3004 Canal Drive
New Orleans, Louisiana 70119
NAVAL ARCHITECT

SAR

BID SET
NOT FOR CONSTRUCTION

SCALE AS NOTED
SHEET SIZE: 12 X 18

BISTRO DINING
POST ASSEMBLY
DRAWINGS

S-21

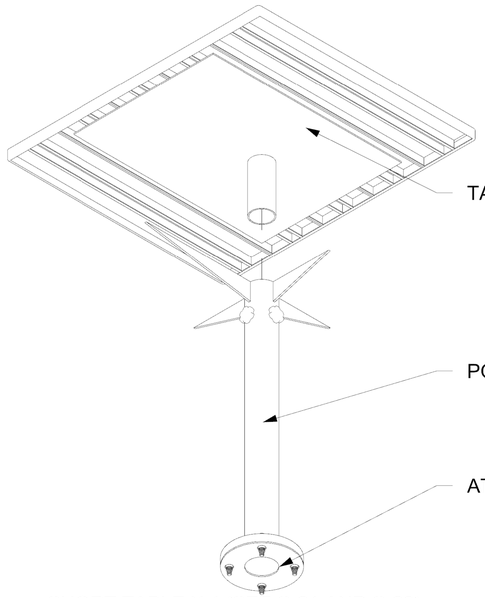

SHORT TABLE X 4 (SEE S-21 AND S-23)
S-SERIES

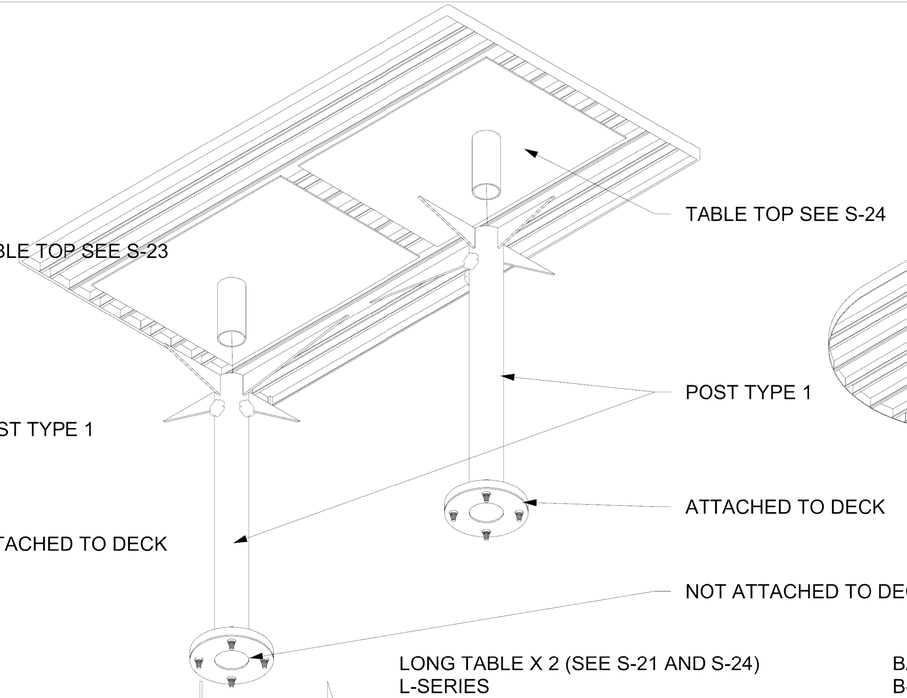

LONG TABLE X 2 (SEE S-21 AND S-24)
L-SERIES

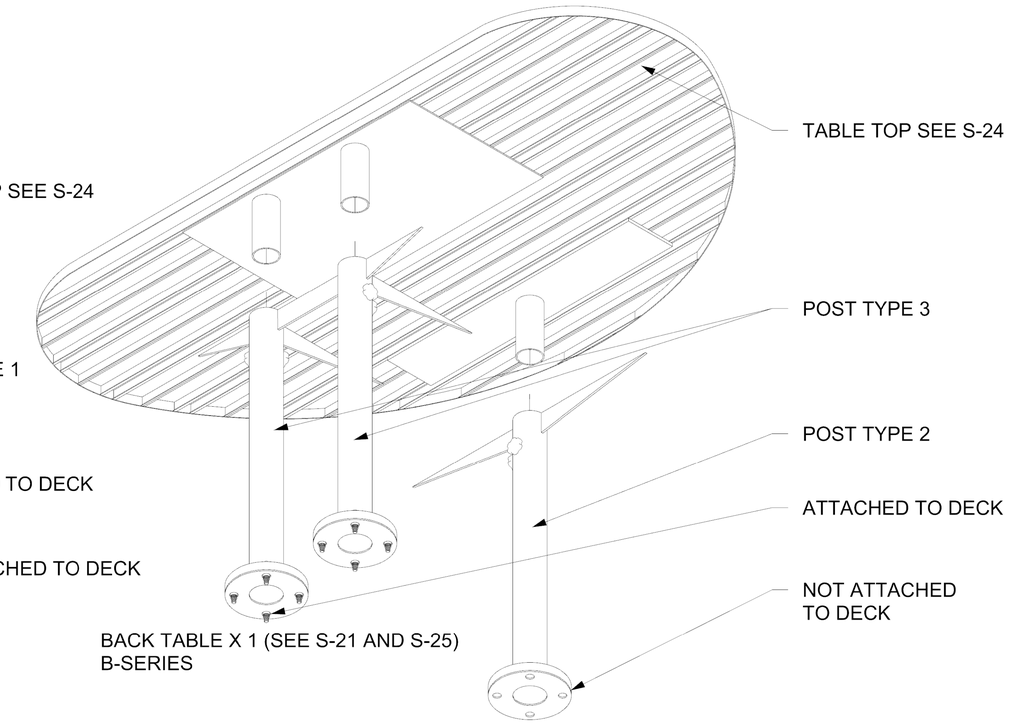

BACK TABLE X 1 (SEE S-21 AND S-25)
B-SERIES

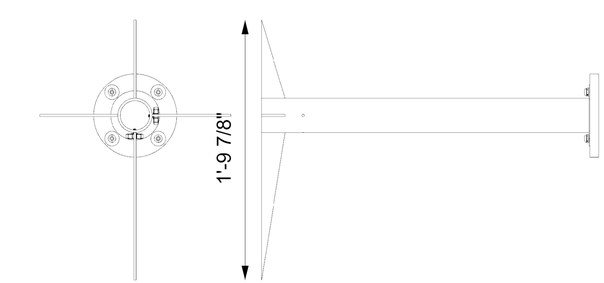

POST TYPE 1
FOR S AND L SERIES

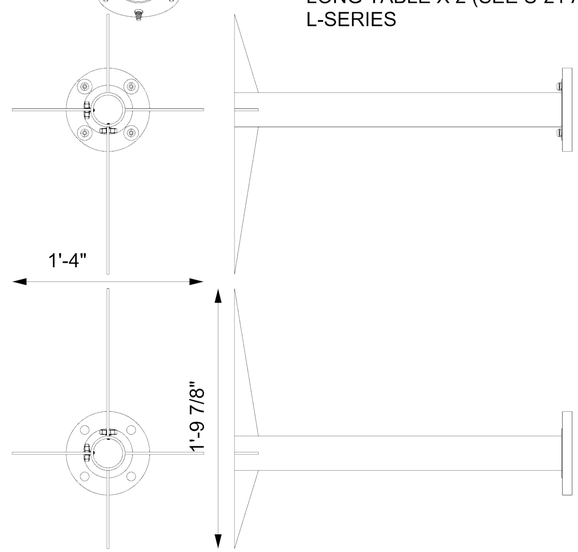

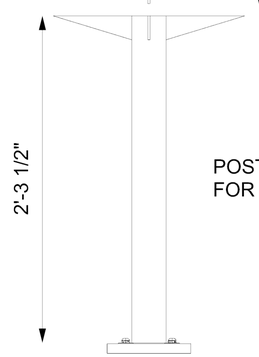

POST TYPE 2
FOR B SERIES

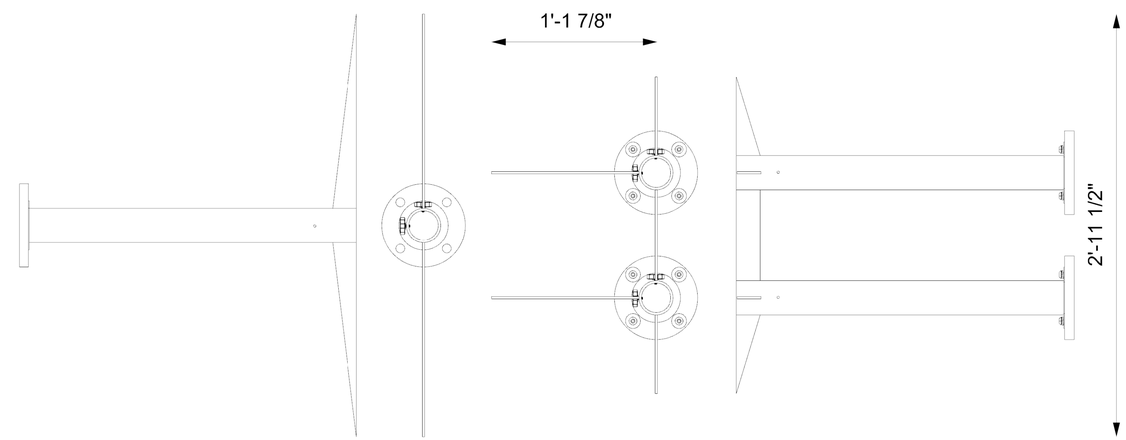

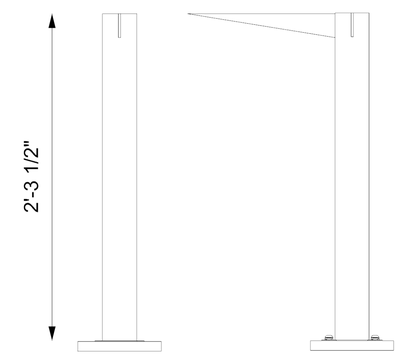

POST TYPE 3
FOR B SERIES

1 BISTRO DINING POST ASSEMBLY PIECES 1:12

NOTE: ALL CUT FILES TO BE SUPPLIED TO WINNING BIDDER
NOTE: MUST BE COMPLETED TO THE SATISFACTION OF METALAB STUDIO (SEE SPECS)

NO.	ISSUE	DATE
1	ADDENDUM SET 1	1 September 2016

SAN ANTONIO RIVERBOATS
PROTOTYPE

[METALAB ARCHITECTURE]
20 N Sampson St
Houston, Texas 77003
713.426.3640
www.metalabstudio.com
info@metalabstudio.com
ARCHITECT

Gresy Nelson Design
(985) 515-1263
30004 Cane Drive,
Ponchatoula, Louisiana 70454
NAVAL ARCHITECT

SAR

SCALE AS NOTED

SHEET SIZE: 12 X 18

BID SET
NOT FOR CONSTRUCTION

BISTRO DINING
POST ASSEMBLY
PIECES

S-22

FOR HARDWARE AND DETAILS, SEE S-20
FOR POST ASSEMBLY, SEE S-21 AND S-22

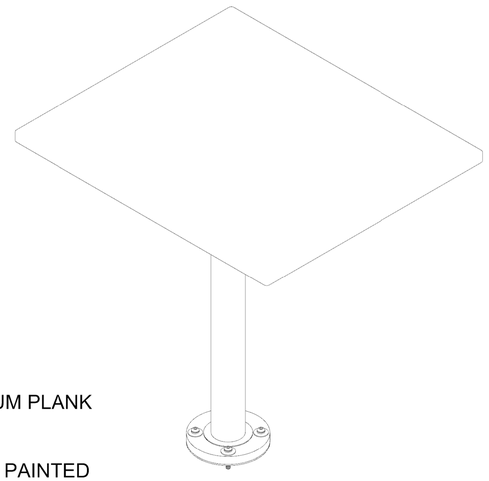

MATERIAL:
ALUMINUM 5052
INCLUDING ALUMINUM PLANK
6" WIDE BY 1" DEEP
1/8" THICK PLATE
AFTER ASSEMBLED, PAINTED
TO MATCH DECK RIM COLOR
(SEE COLOR INDEX)

2 BISTRO DINING ASSEMBLY (S-SERIES) 1:12

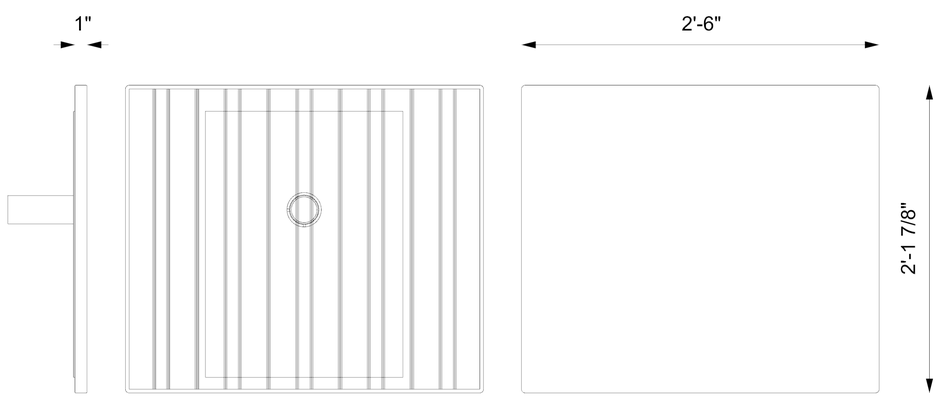

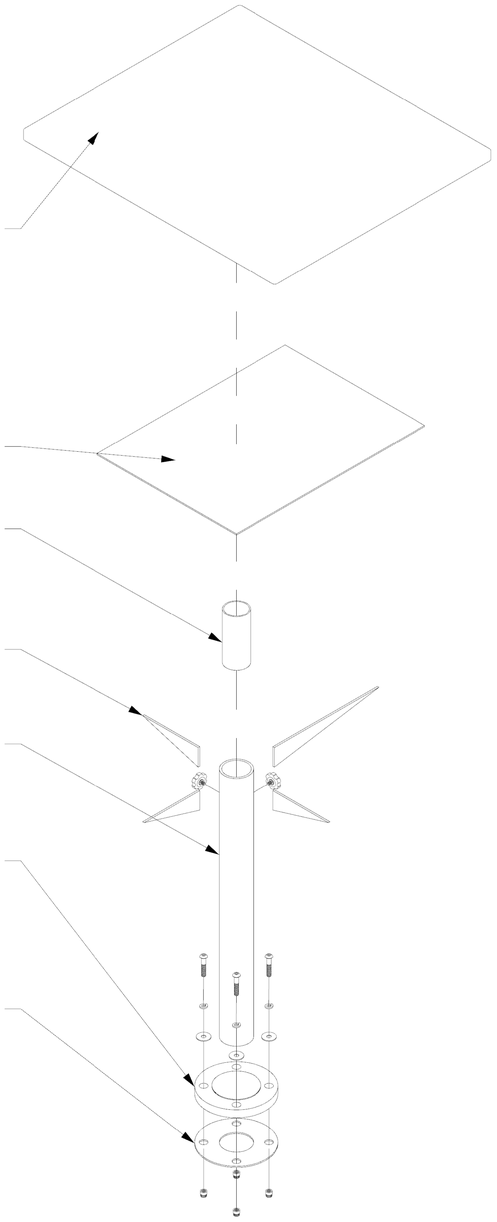

NOTE: ALL CUT FILES
TO BE SUPPLIED TO
WINNING BIDDER
NOTE: MUST BE
COMPLETED TO THE
SATISFACTION OF
METALAB STUDIO
(SEE SPECS)

1 BISTRO DINING PIECES (S-SERIES) 1:12

3 BISTRO DINING ASSEMBLY (S-SERIES) 1:12

NO.	ISSUE	DATE
1	ADDENDUM SET 1	1 September 2016

SAN ANTONIO RIVERBOATS
PROTOTYPE

[METALAB ARCHITECTURE]
20 N Sampson St
Houston, Texas 77003
713.426.3640
www.metalabstudio.com
info@metalabstudio.com
ARCHITECT

Gustafson, Guthrie, Nichols, Design
(985) 715-1203
3004 Canal Drive,
New Orleans, Louisiana 70118
NAVAL ARCHITECT

SAR

SHEET SIZE: 12 X 18
SCALE AS NOTED

BID SET
NOT FOR CONSTRUCTION

BISTRO DINING
ASSEMBLY
DRAWINGS 1
S-SERIES

S-23

FOR HARDWARE AND DETAILS, SEE S-20
FOR POST ASSEMBLY, SEE S-21 AND S-22

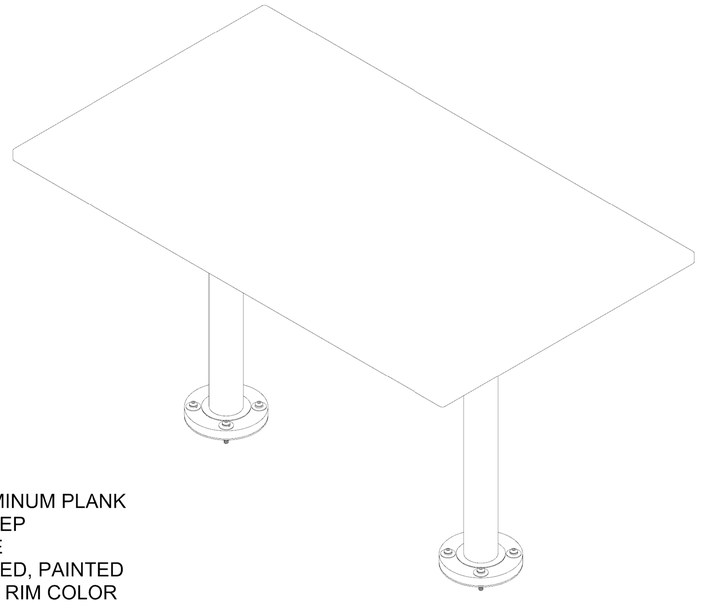

MATERIAL:
ALUMINUM 5052
INCLUDING ALUMINUM PLANK
6" WIDE BY 1" DEEP
1/8" THICK PLATE
AFTER ASSEMBLED, PAINTED
TO MATCH DECK RIM COLOR
(SEE COLOR INDEX)

2 BISTRO DINING ASSEMBLY (L-SERIES) 1:12

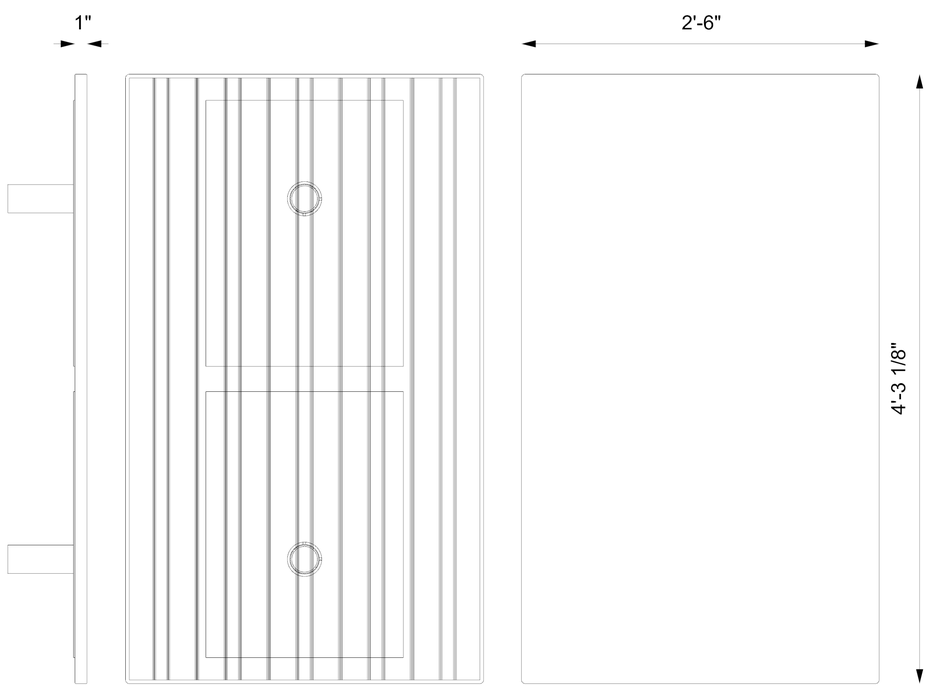

1 BISTRO DINING PIECES (L-SERIES) 1:12

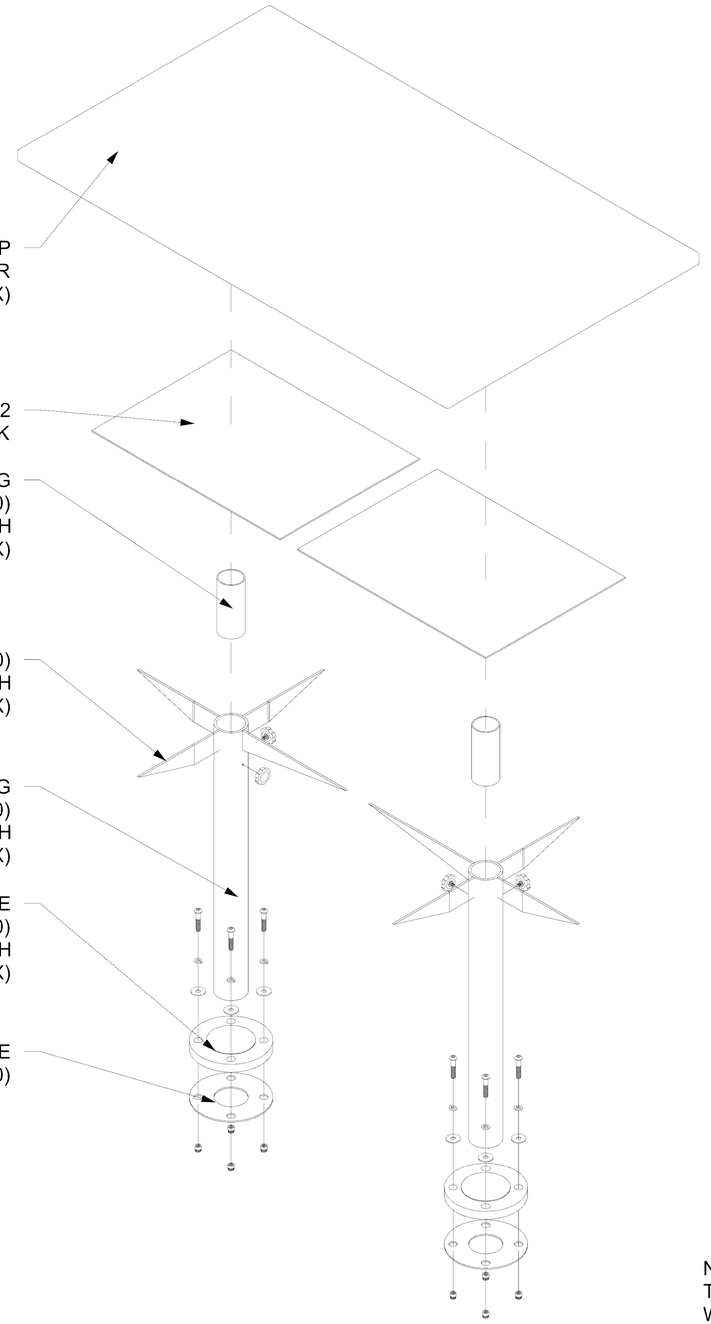

3 BISTRO DINING ASSEMBLY (L-SERIES) 1:12

NOTE: ALL CUT FILES
TO BE SUPPLIED TO
WINNING BIDDER
NOTE: MUST BE
COMPLETED TO THE
SATISFACTION OF
METALAB STUDIO
(SEE SPECS)

NO.	ISSUE	DATE
1	ADDENDUM SET 1	1 September 2016

SAN ANTONIO RIVERBOATS
PROTOTYPE

[METALAB ARCHITECTURE]
20 N Sampson St
Houston, Texas 77003
713.426.3640
www.metalabstudio.com
info@metalabstudio.com
ARCHITECT

Gaston Nelson Design
(985) 515-2263
3004 Canal Drive
New Orleans, LA
Louisiana 70130
NAVAL ARCHITECT

SAR

BID SET
NOT FOR CONSTRUCTION

SHEET SIZE: 12 X 18
SCALE AS NOTED

BISTRO DINING
ASSEMBLY
DRAWINGS 2
L-SERIES

S-24

FOR HARDWARE AND DETAILS, SEE S-20
FOR POST ASSEMBLY, SEE S-21 AND S-22

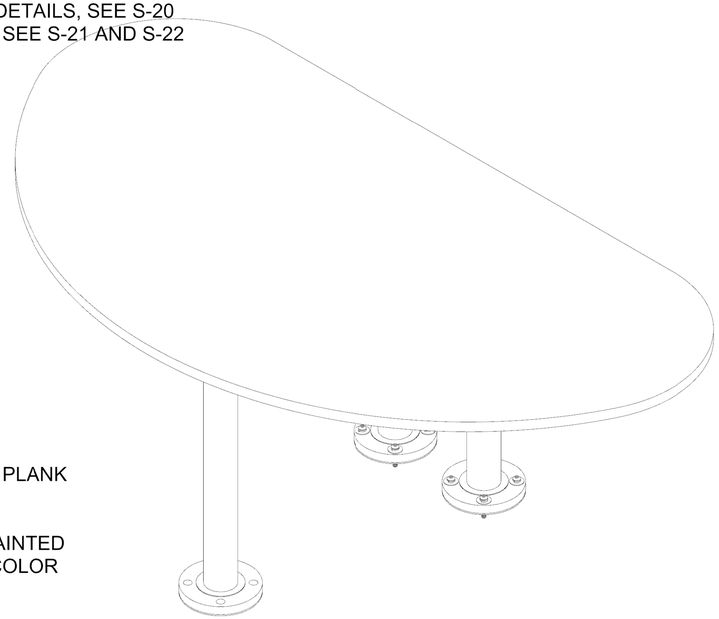

MATERIAL:
ALUMINUM 5052
INCLUDING ALUMINUM PLANK
6" WIDE BY 1" DEEP
1/8" THICK PLATE
AFTER ASSEMBLED, PAINTED
TO MATCH DECK RIM COLOR
(SEE COLOR INDEX)

2 BISTRO DINING ASSEMBLY (B-SERIES) 1:12

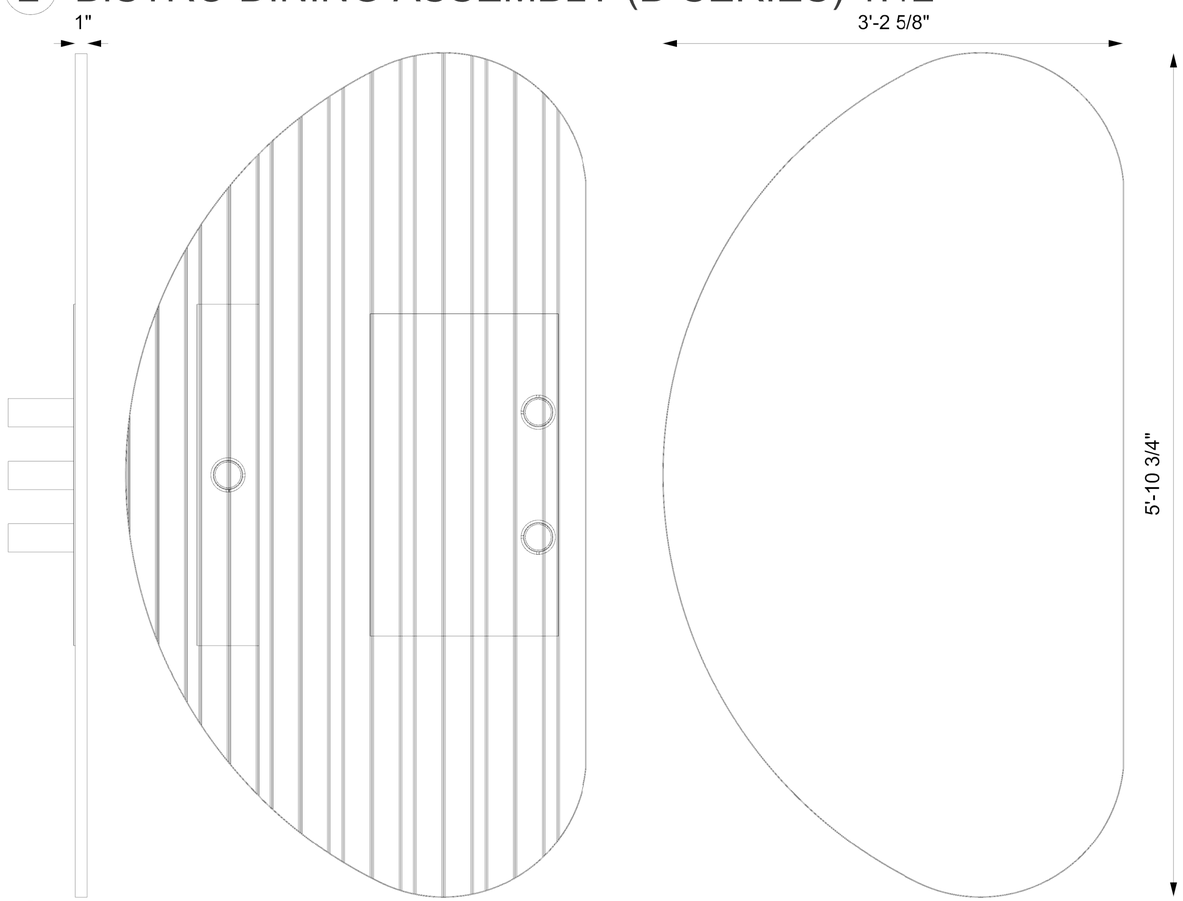

1 BISTRO DINING PIECES (B-SERIES) 1:12

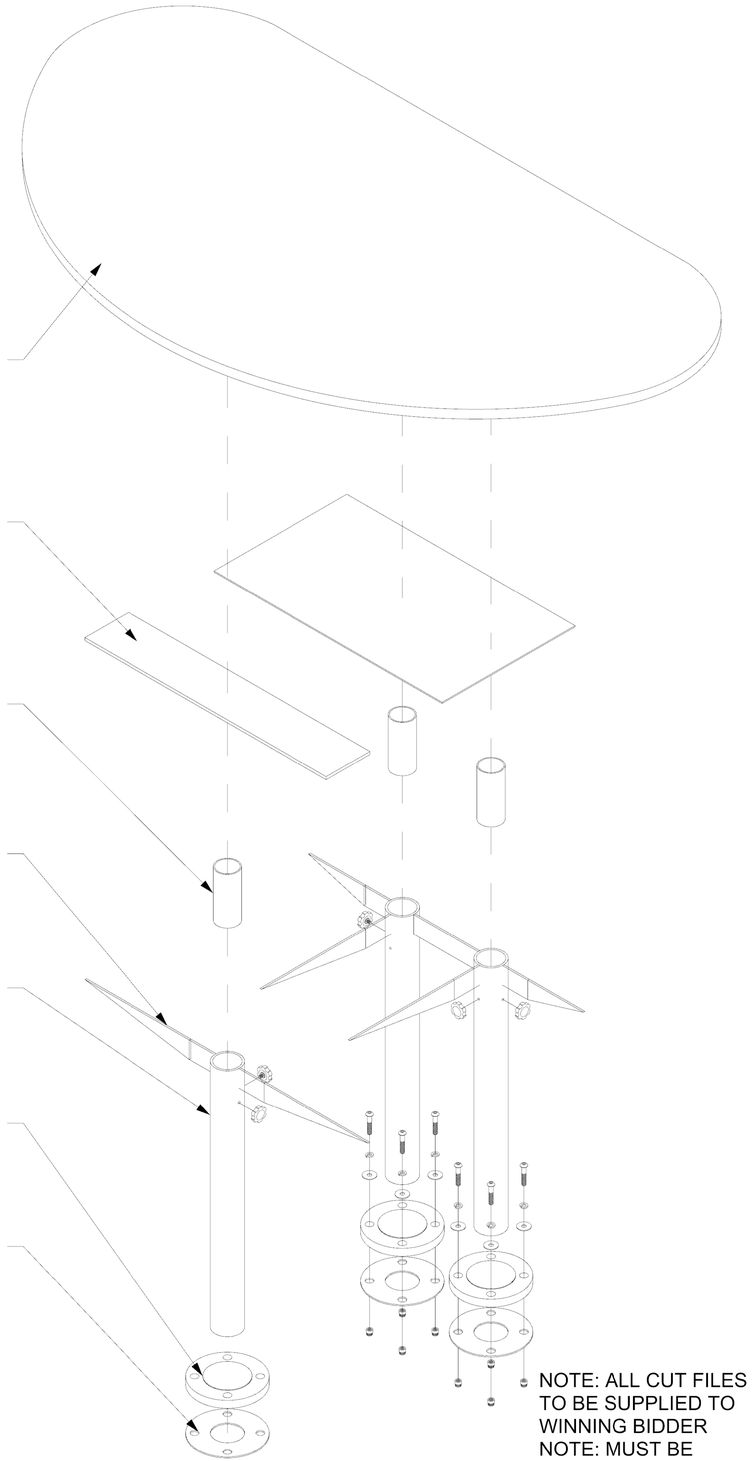

NOTE: ALL CUT FILES
TO BE SUPPLIED TO
WINNING BIDDER
NOTE: MUST BE
COMPLETED TO THE
SATISFACTION OF
METALAB STUDIO
(SEE SPECS)

3 BISTRO DINING ASSEMBLY (B-SERIES) 1:12

NO.	ISSUE	DATE
1	ADDENDUM SET 1	1 September 2016

SAN ANTONIO RIVERBOATS
PROTOTYPE

[METALAB ARCHITECTURE]
20 N Sampson St
Houston, Texas 77003
713.426.3640
www.metalabstudio.com
info@metalabstudio.com
ARCHITECT

Gaines Nelson Design
(985) 515-2263
3004 Canal Drive
Metairie, Louisiana 70006
Louisiana 70506
NAVAL ARCHITECT

SAR

BID SET
NOT FOR CONSTRUCTION

SCALE AS NOTED
SHEET SIZE: 12 X 18

BISTRO DINING
ASSEMBLY
DRAWINGS 3
B-SERIES

S-25

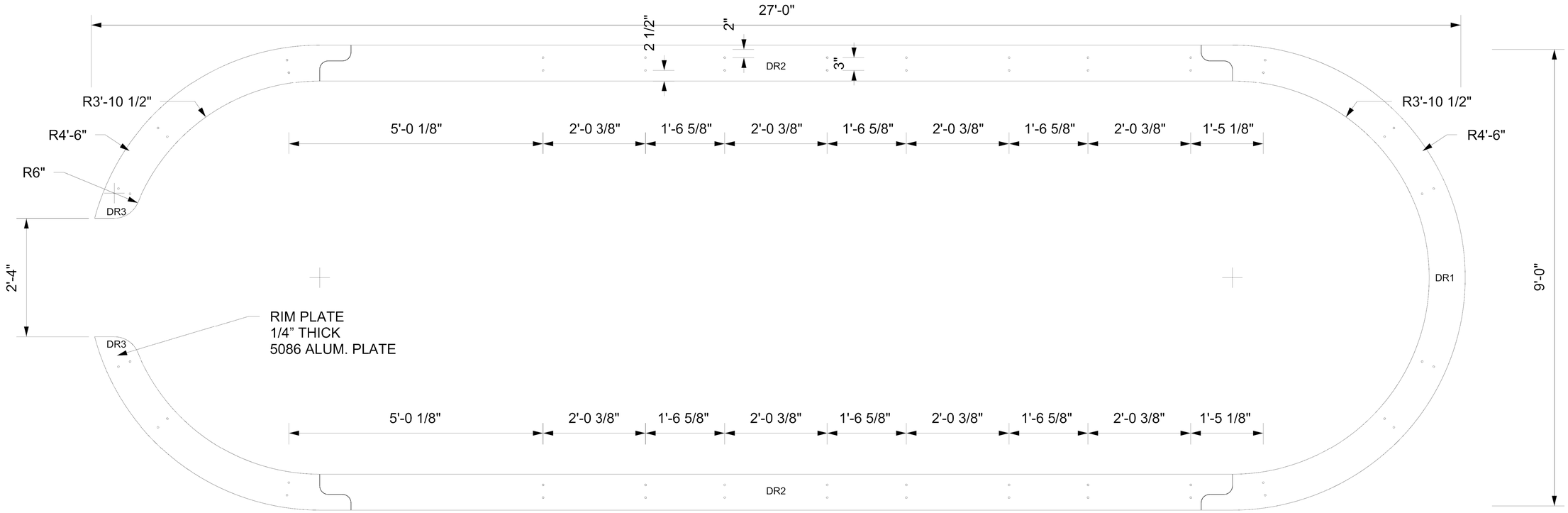

1 DECK RIM PLATE 1:24

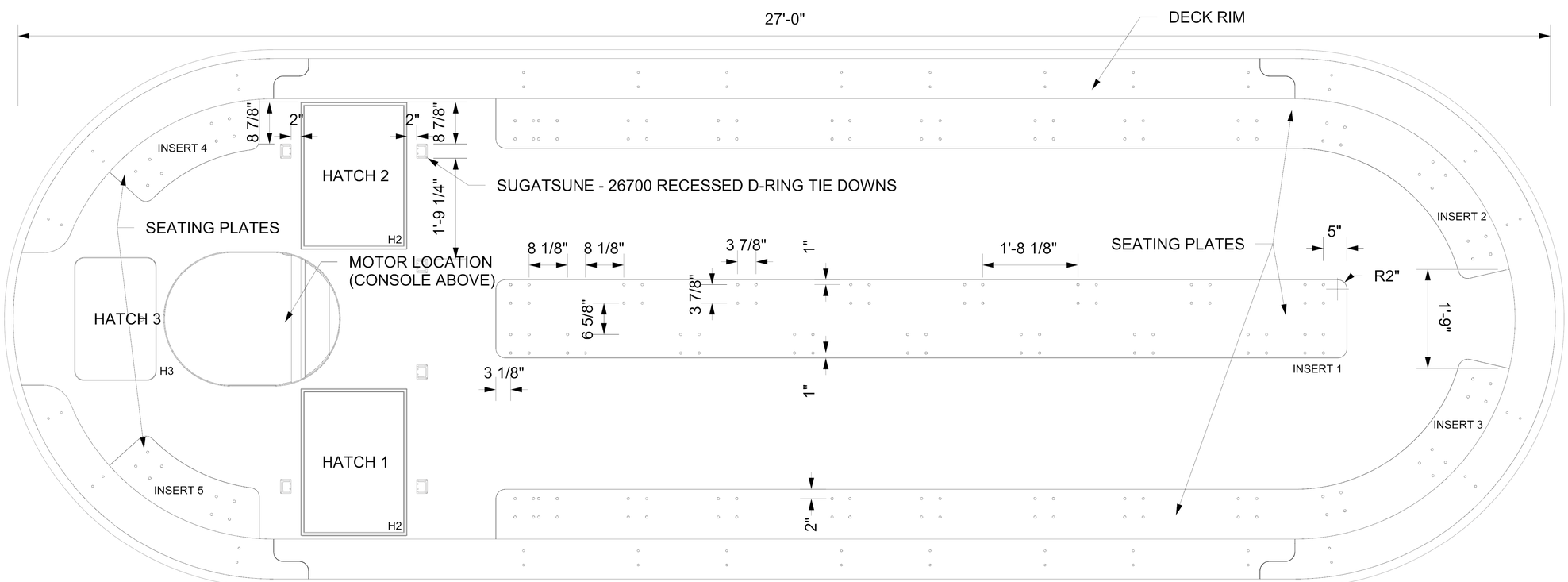

1 DECK PLAN 1:24

NOTE: ALL CUT FILES TO BE SUPPLIED TO WINNING BIDDER
NOTE: MUST BE COMPLETED TO THE SATISFACTION OF METALAB STUDIO (SEE SPECS)

NO.	ISSUE	DATE
1	ADDENDUM SET 1	14 September 2016

Gregg Nelson Design
(985) 515-1263
3004 Canal Drive,
Mandeville, Louisiana 70448
NAVAL ARCHITECT

SAN ANTONIO RIVERBOATS
PROTOTYPE

[METALAB ARCHITECTURE]
20 N Sampson St
Houston, Texas 77003
713.426.3640
www.metalabstudio.com
info@metalabstudio.com
ARCHITECT

SAR

BID SET
NOT FOR CONSTRUCTION

SHEET SIZE: 12 X 18
SCALE AS NOTED

DECK PLAN AND
DECK RIM PLATE

D-1

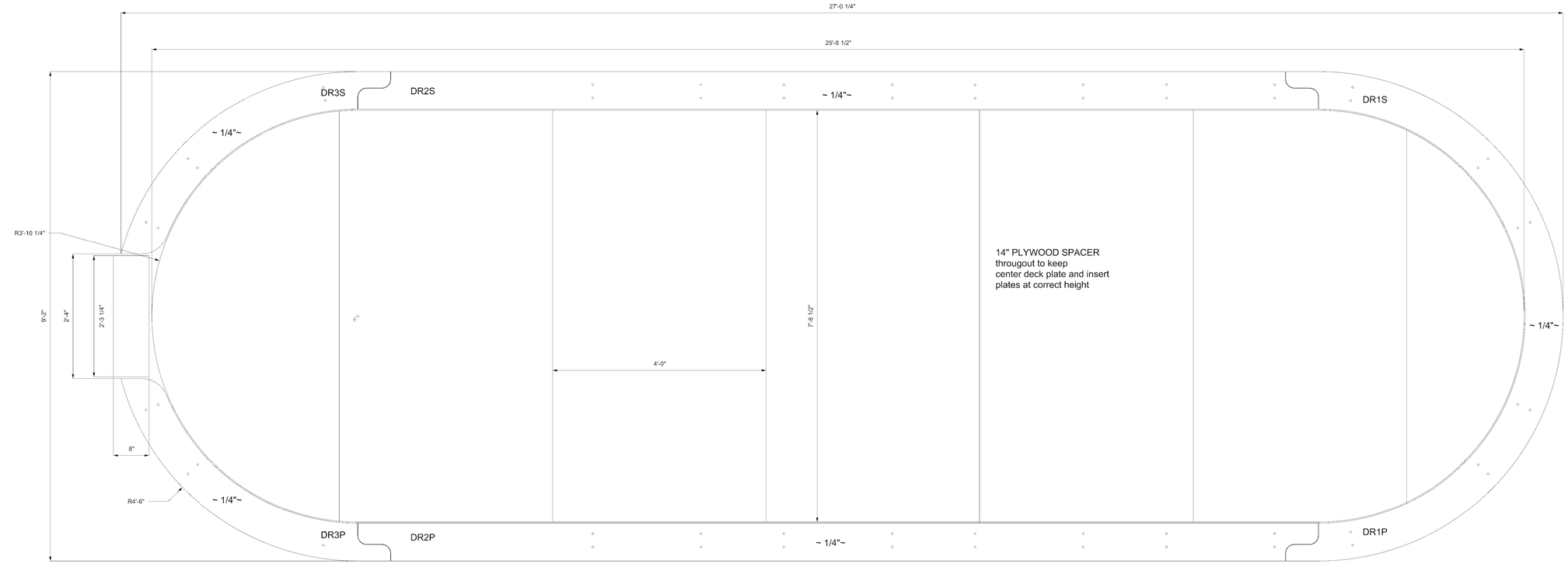

STAGE 1 - Setup & Deck Ring Welding

STAGE 1 NOTES:

1. The Main Construction Base must be level. Should a level surface not be available it is recomended to create a new level with a self leveling compound over a solid base.

2. Fully weld the deck ring S-joints prior to final positioning.

3. Bolt the deck ring to the Main Construction Base to hold deck ring in correct position during hull assembly and welding.

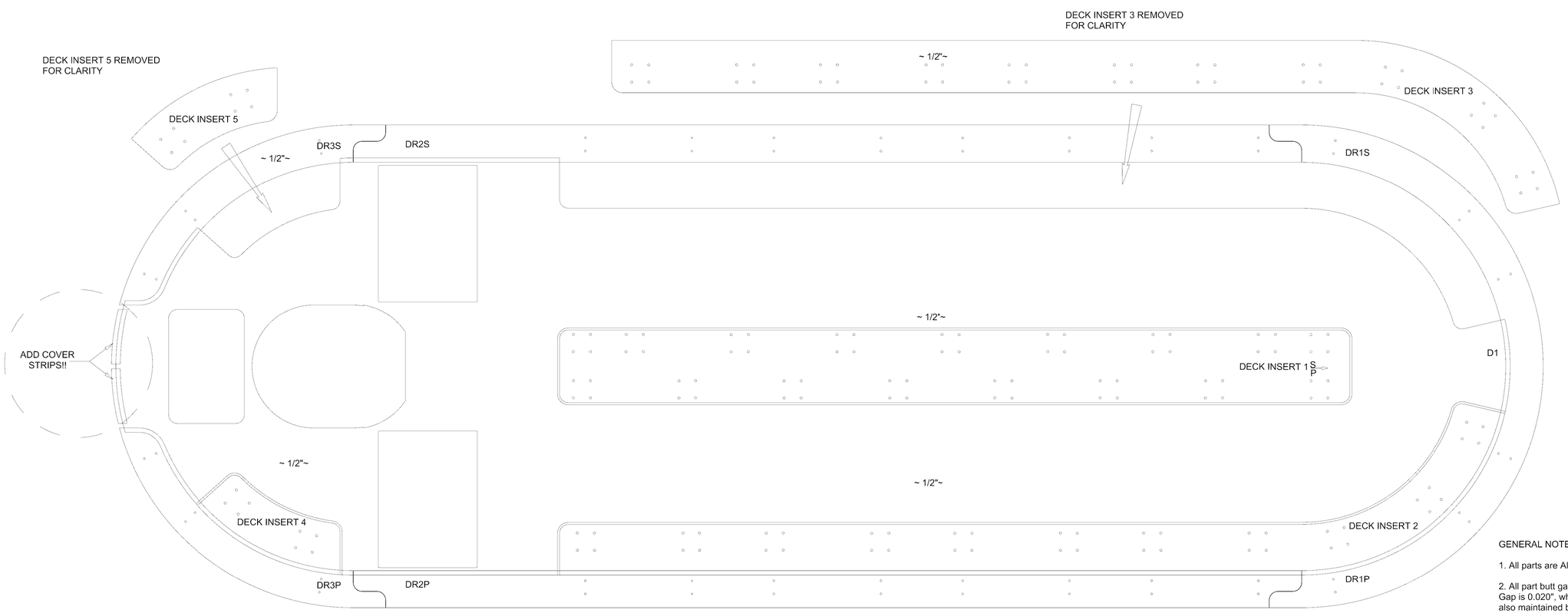

STAGE 2 - Main Deck Plate and Insert Plate Welding

STAGE 2 NOTES:

1. The 316" Main Deck (D1) welds directly onto the Deck Ring with a consistant 1" overlap where contact is made.

2. Weights may be placed on the supported sides of the Main Deck to stabilize the joint while welding.

3. The Rabbited Inserts will be prepared as show on Detail Drawing 4.

4. Ensure the orientation of the Insert Plates match the drawing, remembering that the deck assembly is inverted in both the drawing view and on the the production base.

5. Bolt the Insert Plates to the Main Construction Base to hold the plates in the correct position during hull assembly and welding.

GENERAL NOTES:

1. All parts are Aluminum 5086 Alloy.

2. All part butt gaps are 116" typical. Designed Glue Gap is 0.020", while this is designed into the parts it is also maintained buy the Polyethylene release sheet.

1 DECK ASSEMBLY

NOTE: MUST BE COMPLETED TO THE SATISFACTION OF METALAB STUDIO (SEE SPECS)

NO.	ISSUE	DATE
1	ADDENDUM SET 1	1 September 2016

SAN ANTONIO RIVERBOATS
PROTOTYPE

[METALAB ARCHITECTURE]
20 N Sampson St
Houston, Texas 77003
713.426.3640
www.metalabstudio.com
info@metalabstudio.com
ARCHITECT

Gaston Nelson Design
(985) 515-1263
30004 Cantel Drive,
Ste A, Lacombe
Louisiana 70445
NAVAL ARCHITECT

SAR

BID SET
NOT FOR CONSTRUCTION

SHEET SIZE: 12 X 18
SCALE AS NOTED

DECK ASSEMBLY

D-2

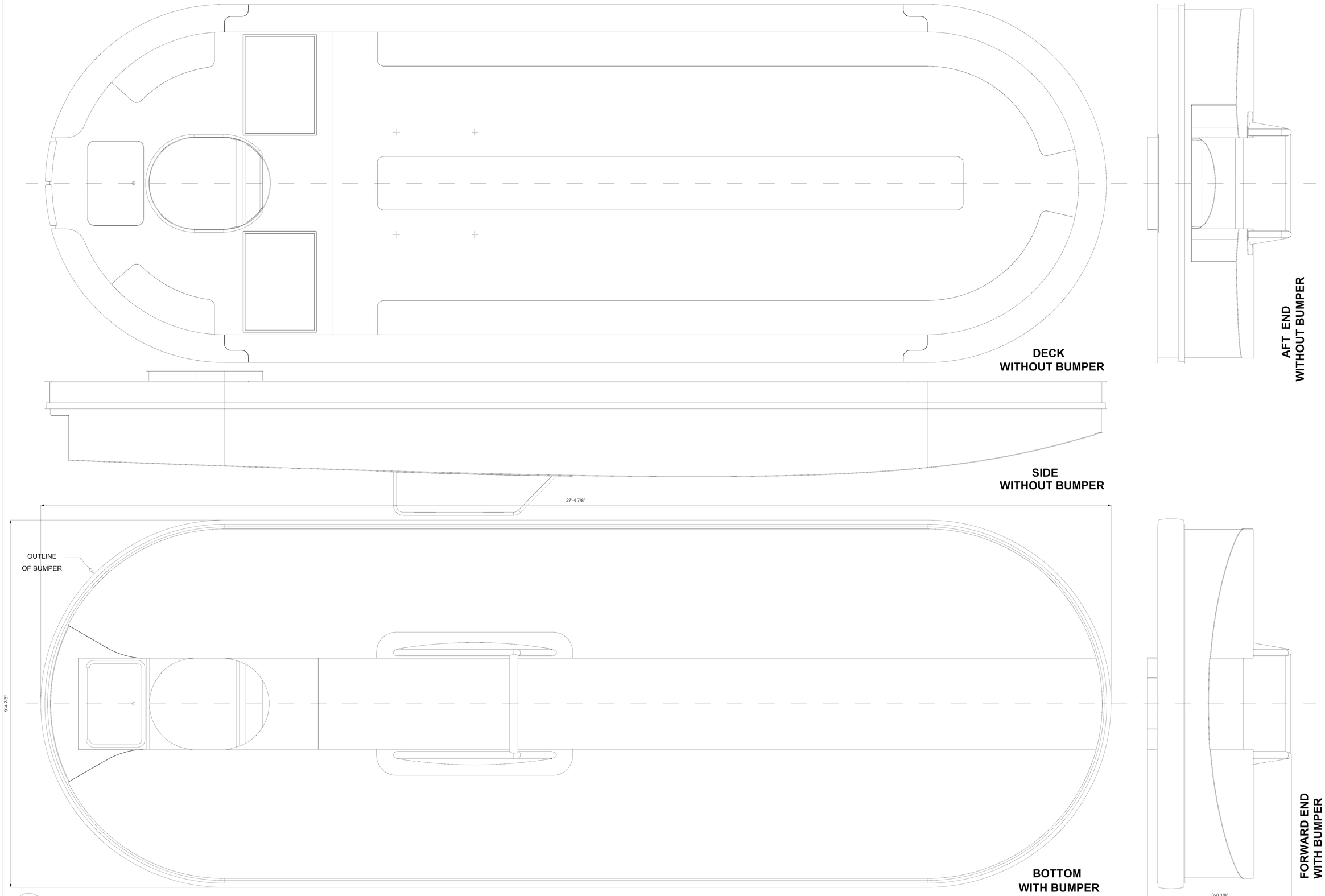

1 DECK ASSEMBLY ATTACHMENT DETAILS

NOTE: MUST BE COMPLETED TO THE SATISFACTION OF METALAB STUDIO (SEE SPECS)

NO.	ISSUE	DATE
1	ADDENDUM SET 1	1 September 2016

SAN ANTONIO RIVERBOATS
PROTOTYPE

[METALAB ARCHITECTURE]
20 N Sampson St
Houston, Texas 77003
713.426.3640
www.metalabstudio.com
info@metalabstudio.com
ARCHITECT

Gaines Nelson Design
(985) 515-1263
3004 Canal Drive
Lake Charles
Louisiana 70605
NAVAL ARCHITECT

SAR

SHEET SIZE: 12 X 18
SCALE AS NOTED

BID SET
NOT FOR CONSTRUCTION

HULL AND DECK
ASSEMBLY

D-3

DECK HARDWARE SCHEDULE

DRAWING	DESCRIPTION	TOTAL
	18-8 Stainless Steel Press-in Nut 3/8"-16 0.25" min. thickness 96439A840	4
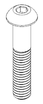	18-8 Stainless Steel Button Head Socket Cap Screw 3/8"-16 2" Length 92949A632	80
	18-8 Stainless Steel Oversized Flat Washer 3/8" 1.25" OD 90313A114	14
	18-8 Stainless Steel Split Lock Washer 3/8" 0.68" OD 92146A031	80

NOTE: USE IRONTITE OR EQUAL ON ALL STAINLESS FASTENERS TO PREVENT SEIZING AND GALLING

1 DECK HARDWARE SCHEDULE

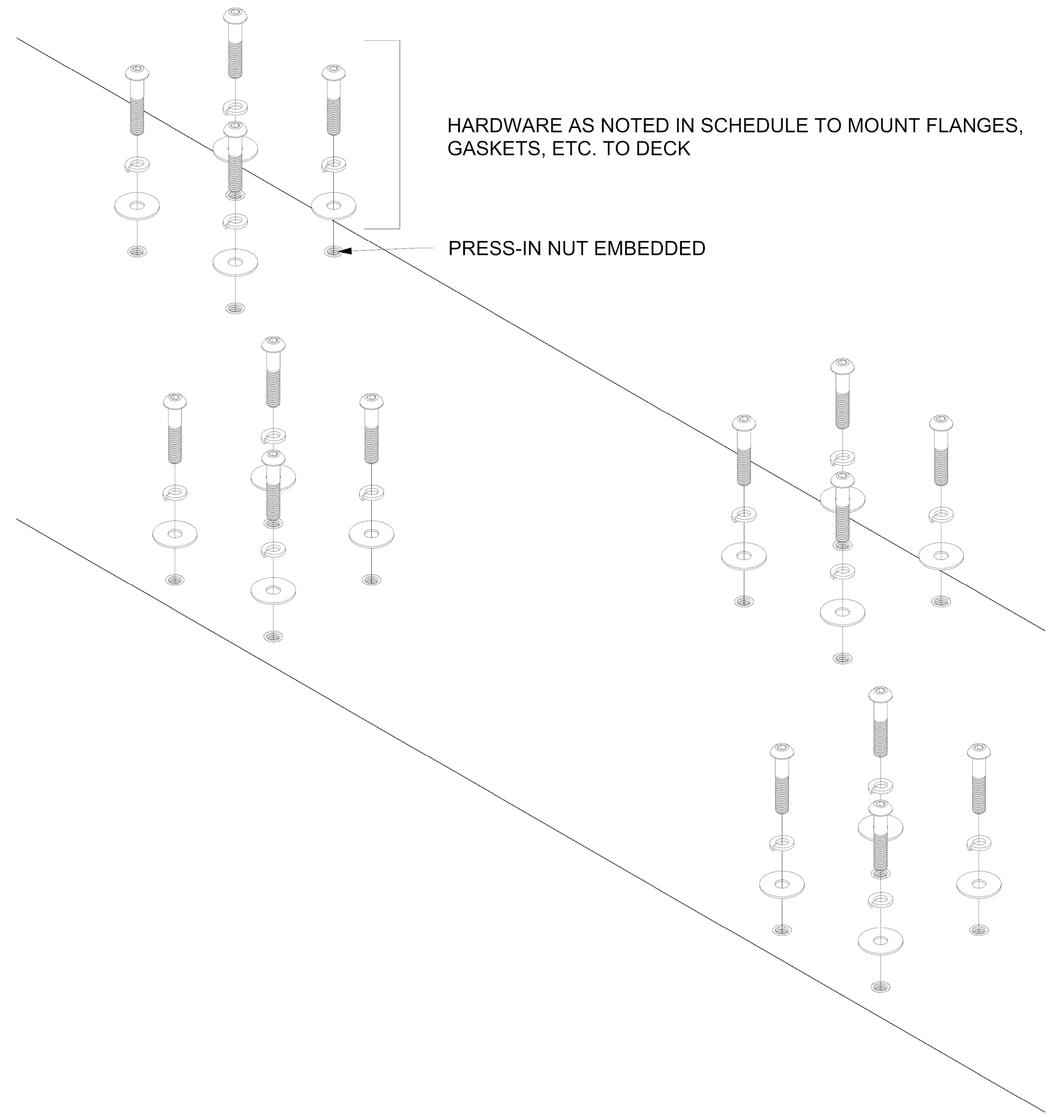

NOTE: ALL CUT FILES TO BE SUPPLIED TO WINNING BIDDER
NOTE: MUST BE COMPLETED TO THE SATISFACTION OF METALAB STUDIO (SEE SPECS)

2 DECK ATTACHMENT METHOD

NO.	ISSUE	DATE
1	ADDENDUM SET 1	1 September 2016

SAN ANTONIO RIVERBOATS
PROTOTYPE

Gwen Nolan Design
(985) 515-1263
3004 Canal Drive,
New Orleans,
Louisiana 70119
NAVAL ARCHITECT

[METALAB ARCHITECTURE]
20 N Sampson St
Houston, Texas 77003
713.426.3640
www.metalabstudio.com
info@metalabstudio.com
ARCHITECT

SAR

SHEET SIZE: 12 X 18
SCALE AS NOTED

BID SET
NOT FOR CONSTRUCTION

DECK HARDWARE SCHEDULE AND ATTACHMENT METHOD

D-4

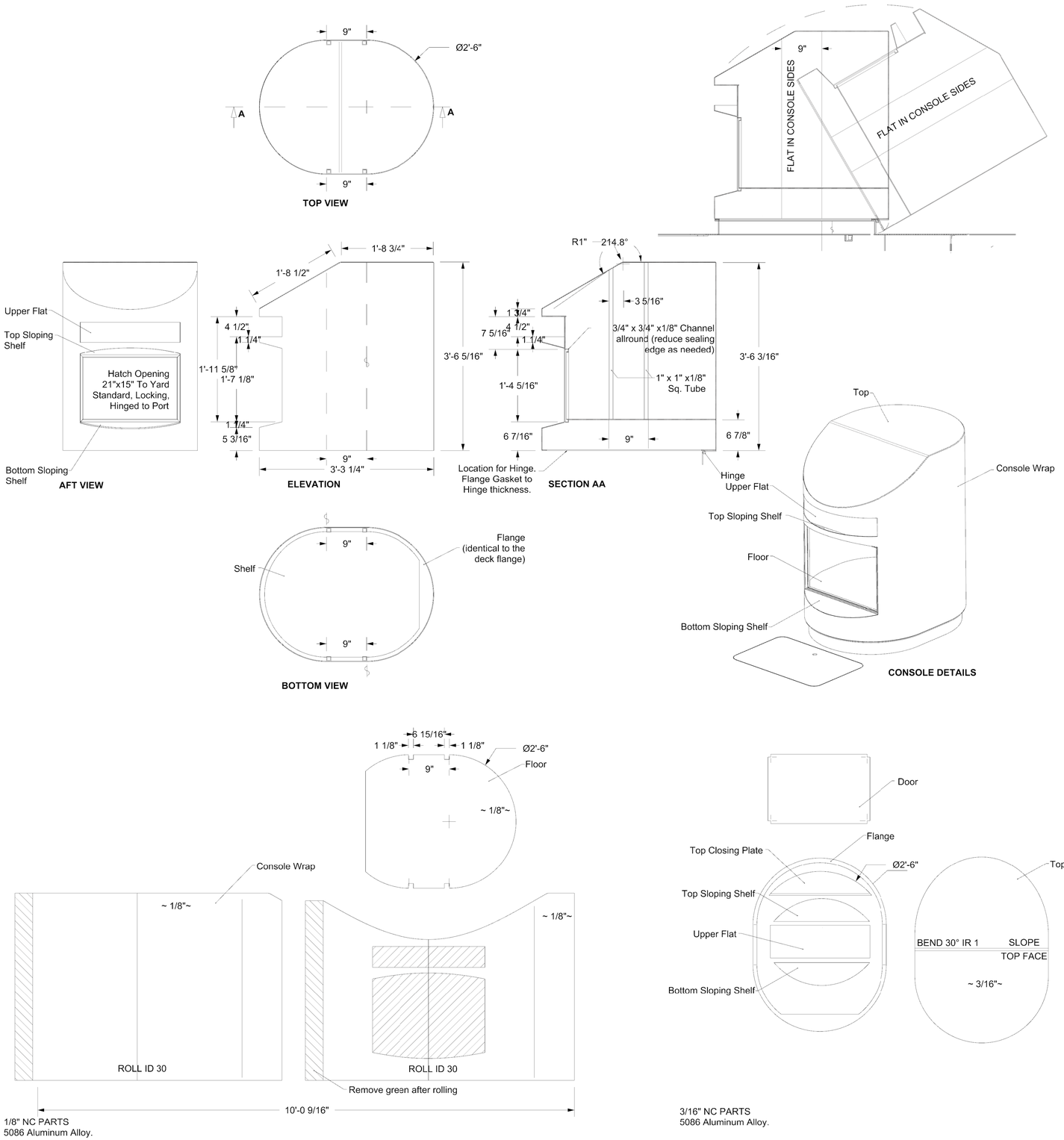

P1602 - ECN 1
DECK MODIFICATION FOR CONSOLE FLANGE

General Notes:

1. Console structural assembly only.
2. Weld fully.
3. The Hinge is a weldable aluminum piano hinge.

NOTE: ALL CUT FILES TO BE SUPPLIED TO WINNING BIDDER

NOTE: MUST BE COMPLETED TO THE SATISFACTION OF METALAB STUDIO (SEE SPECS)

1 CONSOLE CUT FILES AND DETAILS 1:12

2 CONSOLE SECTION AND DETAILS 1:12

NO.	ISSUE	DATE
1	ADDENDUM SET 1	1 September 2016

Gates Marine Design
(985) 515-1263
3004 Canal Drive,
Metairie, Louisiana 70006

NAVAL ARCHITECT

SAN ANTONIO RIVERBOATS
PROTOTYPE

[METALAB ARCHITECTURE]
20 N Sampson St
Houston, Texas 77003
713.426.3640
www.metalabstudio.com
info@metalabstudio.com

ARCHITECT

SAR

BID SET
NOT FOR CONSTRUCTION

SCALE AS NOTED

SHEET SIZE: 12 X 18

CONSOLE SECTION, DETAILS AND CUT FILE

C-1

ACCESSORY MOUNTING SCHEDULE

DRAWING	DESCRIPTION	TOTAL
	Bilge Pump Switch See Sheet A-1, Item 1-2	2
	Bow Navigation Pack See Sheet A-1, Item 4	1
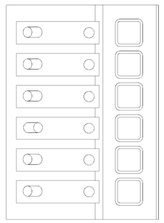	Electric Switch Panel See Sheet A-1, Item 7	1
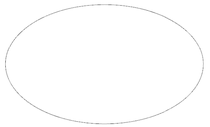	Bow Navigation Pack See Sheet A-1, Item 8-9	1
	VHF Radio See Sheet A-1, Item 11	1
	VHF Radio Antenna See Sheet A-1, Item 12	1
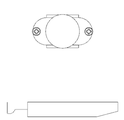	12V Accessory Plug See Sheet A-1, Item 13	1
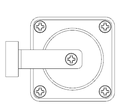	Easy Lock Inlet See Sheet A-1, Item 14	1

ACCESSORY MOUNTING SCHEDULE

DRAWING	DESCRIPTION	TOTAL
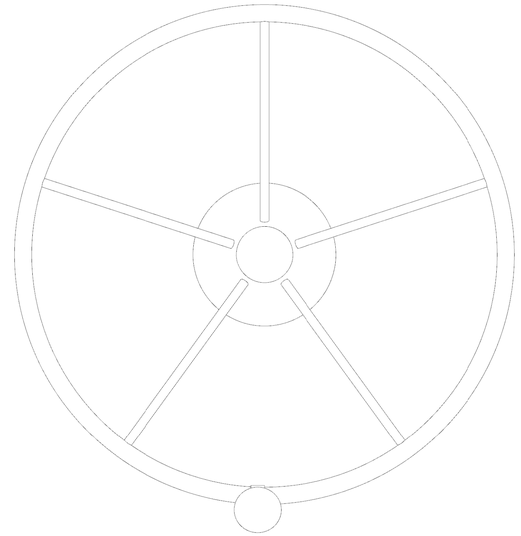	Steering Wheel See Sheet A-1, Item 15-16	1
	Chrome Marine Speakers See Sheet A-1, Item 17	2
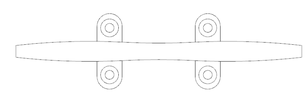	Eye Cleat (8") See Sheet A-1, Item 18	4
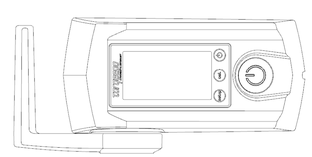	Torqeedo Throttle See Sheet E-1 to E-4	1

1 ACCESSORY MOUNTING SCHEDULE

NO.	ISSUE	DATE
1	ADDENDUM SET 1	1 September 2016

SAN ANTONIO RIVERBOATS
PROTOTYPE

SAR

SHEET SIZE: 12 X 18
SCALE AS NOTED

BID SET
NOT FOR CONSTRUCTION

CONSOLE MOUNTING SCHEDULE

C-2

[METALAB ARCHITECTURE]
20 N Sampson St
Houston, Texas 77003
713.426.3640
www.metalabstudio.com
info@metalabstudio.com
ARCHITECT

Gregg Nelson Design
(985) 515-1263
3004 Canal Drive
Metairie, Louisiana 70006
Louisiana 70506
NAVAL ARCHITECT

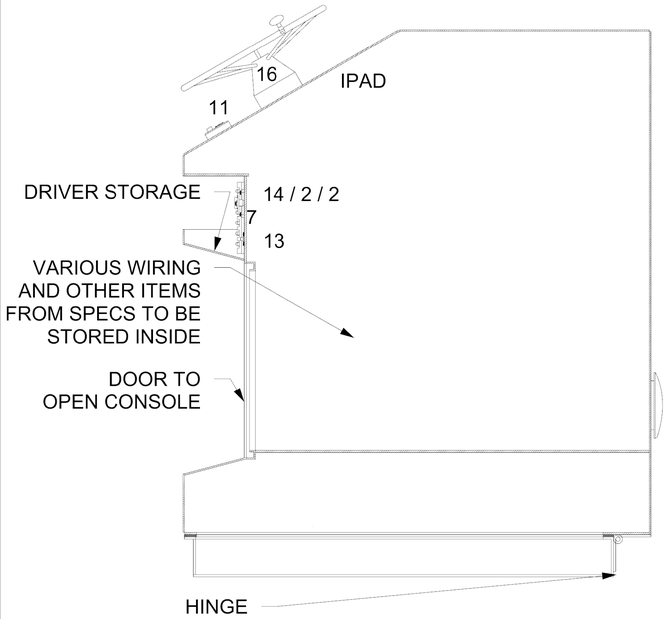

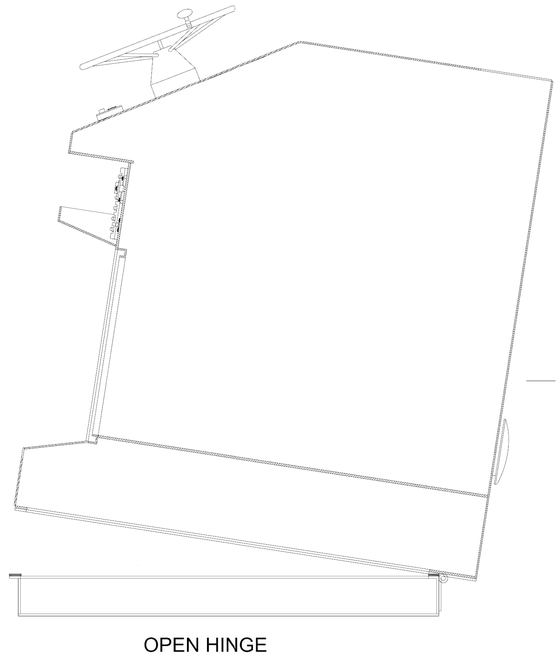

2 CONSOLE SECTION AND HINGING DETAIL 1:12

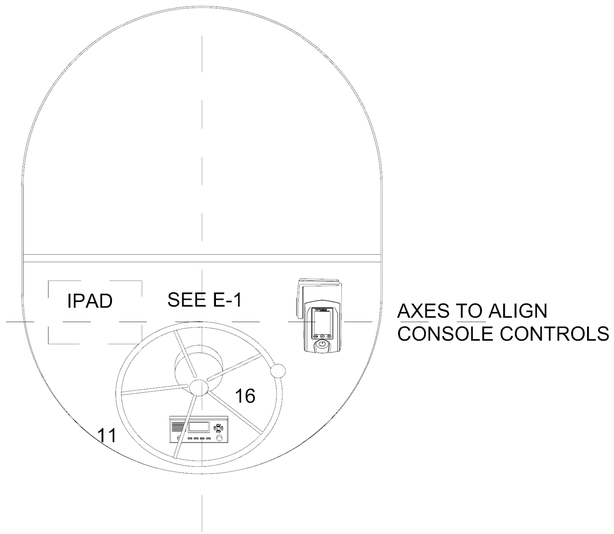

3 CONSOLE PLAN 1:12

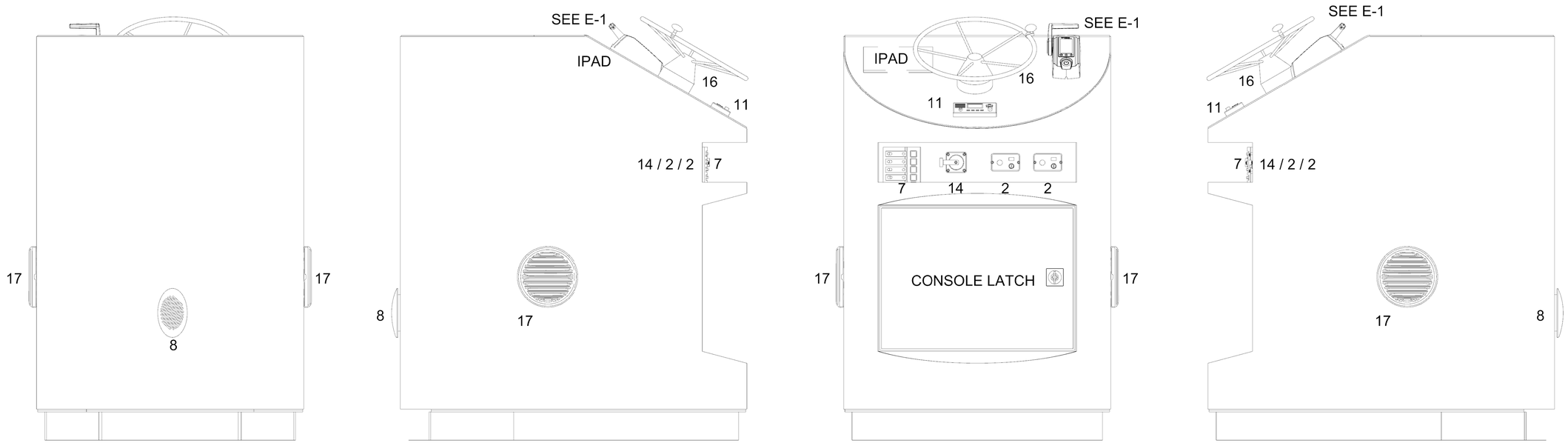

1 CONSOLE 4 SIDED VIEW 1:12

NOTE: ALL CUT FILES TO BE SUPPLIED TO WINNING BIDDER
NOTE: MUST BE COMPLETED TO THE SATISFACTION OF METALAB STUDIO (SEE SPECS)

NO.	ISSUE	DATE
1	ADDENDUM SET 1	1 September 2016

SAN ANTONIO RIVERBOATS
PROTOTYPE

[METALAB ARCHITECTURE]
20 N Sampson St
Houston, Texas 77003
713.426.3640
www.metalabstudio.com
info@metalabstudio.com
ARCHITECT

Gwen Nelson Design
(985) 515-2263
3004 Canal Drive
New Orleans, Louisiana 70119
NAVAL ARCHITECT

SAR

SHEET SIZE: 12 X 18
SCALE AS NOTED

BID SET
NOT FOR CONSTRUCTION

CONSOLE ACCESSORY MOUNTING ASSEMBLY DRAWINGS

C-3

LIST OF EQUIPMENT (NUMBERS LISTED PER BOAT)

ITEM	DESCRIPTION	PART NUMBER	TOTAL #
1	Bilge Pump	Rule RM750A (12v)	2
2	Bilge Pump Switch	Rule #41 (12v)	2
3	T-H Marine Thru-Hull Fitting	750 DP	2
4	Bow Navigation Light Pack (P&S)	SeaDog #400070-1	1
5	Transom Light	Marpac #7-6577	1
6	Bilge Hoses (5ft each)	MPI 5120	2
7	Electric Switch Panel (6 Gang)	Blue Sea #4376	1
8	Horn	FIAMM #51905	1
9	Horn Button	Marpac #7-0487	1
10	Inline Fuse	Marland #2011-12-200	1
11	VHF Radio	LowranceLink-5 DSC Marine Radio	1
12	VHF Radio Antenna	Shakespeare 5215-AIS	1
13	12v Accesory Plug	Marland #5250C	1
14	Easy Lock Inlet	Marinco #6371EL-B	1
15	Steering System	Seastar #SS-137 - 12'	1
16	Steering Wheel w/ Knob	Marpac #7-0248	1
17	Chrome Marine Speakers	Aquatic AV AQ-SPK6.5-4LC	2
18	Eye Cleat (8")	McMaster-Carr 3385T22	4
19	LED Rim Lighting	Vivid Pixel	1

1 LIST OF EQUIPMENT (SEE SPEC SHEETS)

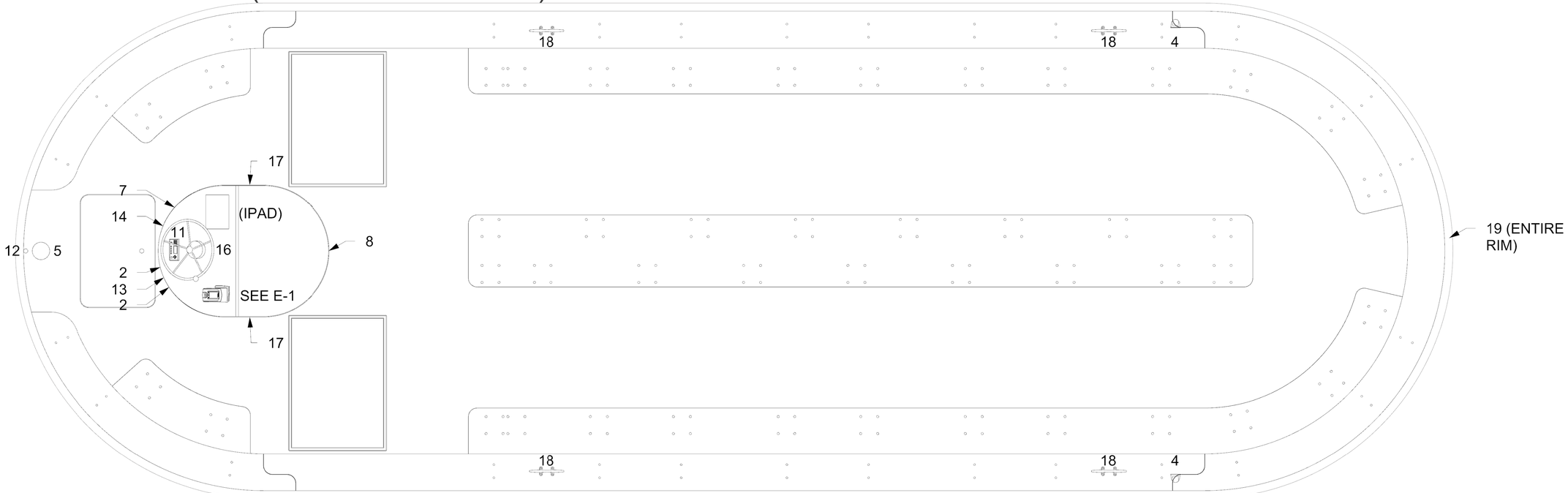

1 ACCESSORY PLAN 1:24

NOTE: MUST BE COMPLETED TO THE SATISFACTION OF METALAB STUDIO (SEE SPECS)

NO.	ISSUE	DATE
1	ADDENDUM SET 1	15 September 2016

SAN ANTONIO RIVERBOATS
PROTOTYPE

[METALAB ARCHITECTURE]
20 N Sampson St
Houston, Texas 77003
713.426.3640
www.metalabstudio.com
info@metalabstudio.com
ARCHITECT

Gregory Nelson Design
(985) 515-1263
3004 Canal Drive
Metairie, Louisiana 70006
NAVAL ARCHITECT

SAR

BID SET
NOT FOR CONSTRUCTION

SHEET SIZE: 12 X 18
SCALE AS NOTED

ACCESSORY PLAN AND SCHEDULE

A-1

FOR INFORMATION AND COMPONENTS RELATED TO
THE ELECTRIC PROPULSION SYSTEM, REFER TO SPECIFICATIONS

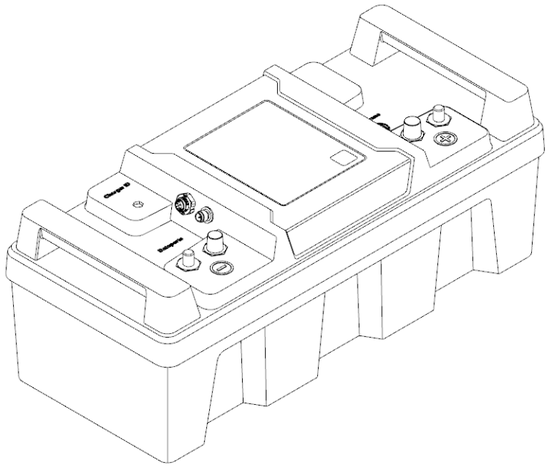

TORQEEDO BATTERY X 16

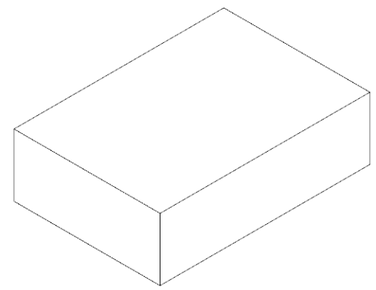

TORQEEDO CHARGER X 6 (SHOWN FOR RELATIVE SIZE)

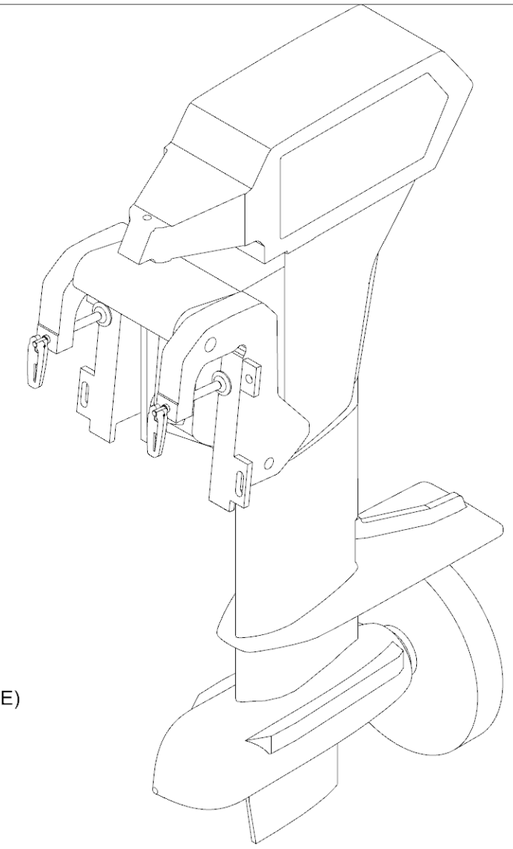

TORQEEDO MOTOR X 1

2 BATTERY AND CHARGER SCHEDULE 1:6

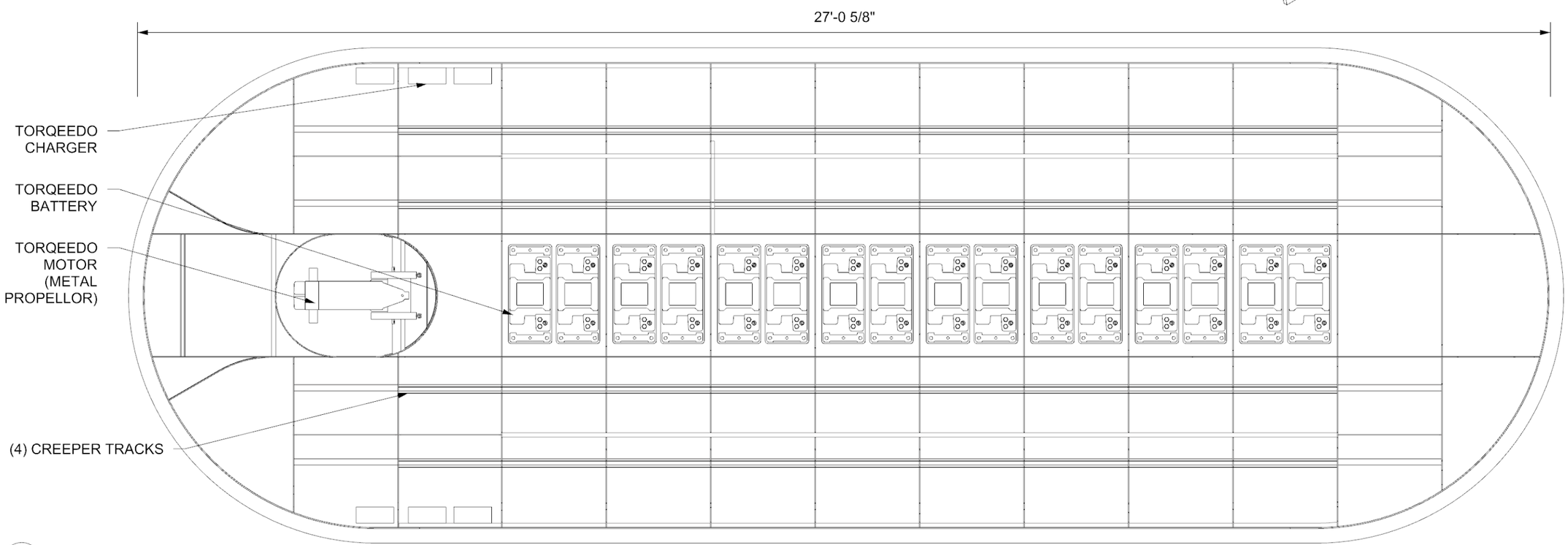

1 BATTERY AND CHARGER PLAN 1:24

NOTE: MUST BE COMPLETED TO THE SATISFACTION OF METALAB STUDIO (SEE SPECS)

NO.	ISSUE	DATE
1	ADDENDUM SET 1	1 September 2016

SAN ANTONIO RIVERBOATS
PROTOTYPE

[METALAB ARCHITECTURE]
20 N Sampson St
Houston, Texas 77003
713.426.3640
www.metalabstudio.com
info@metalabstudio.com
ARCHITECT

Gerald Hines Design
Project Manager
1504 Lamar Drive,
Houston, Texas
77010-3027

NAVAL ARCHITECT

SAR

SHEET SIZE: 12 X 18
SCALE AS NOTED

BID SET
NOT FOR CONSTRUCTION

BATTERY AND CHARGER PLAN AND SCHEDULE

E-1

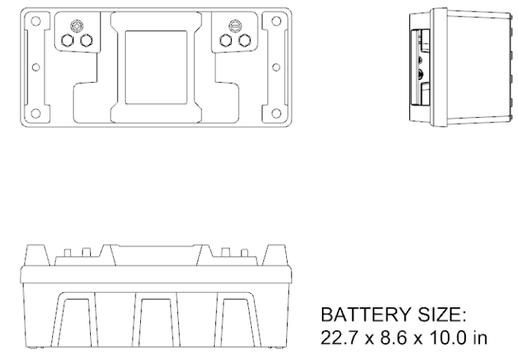

3 BATTERY DETAIL 1:12

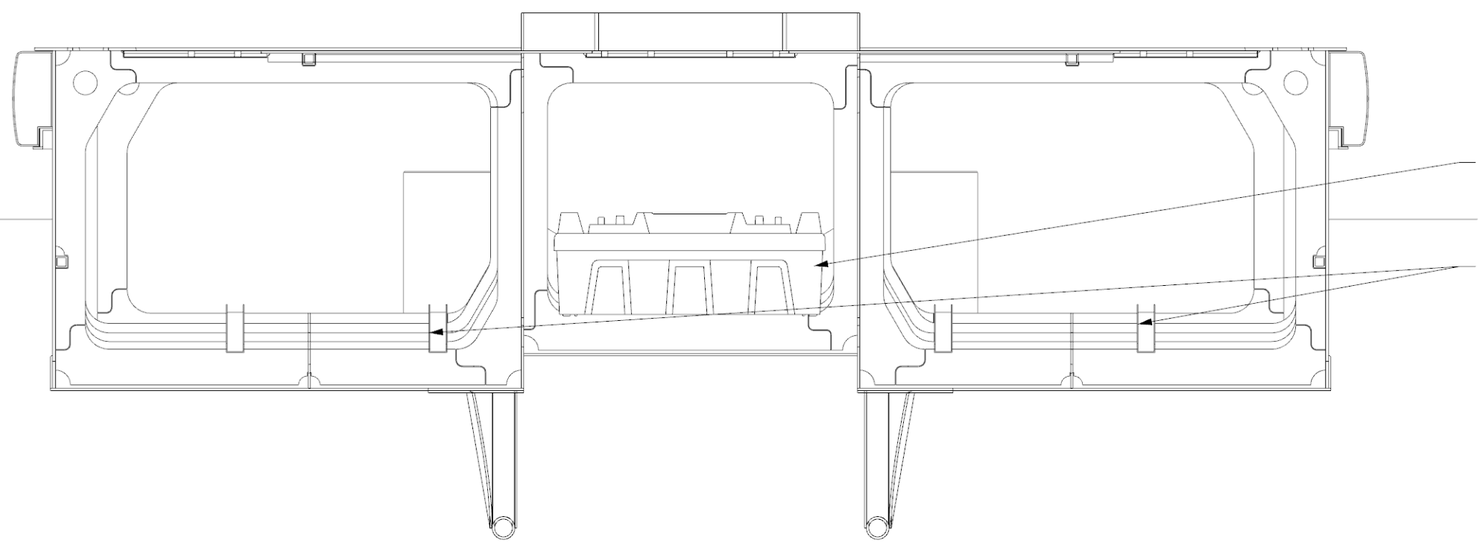

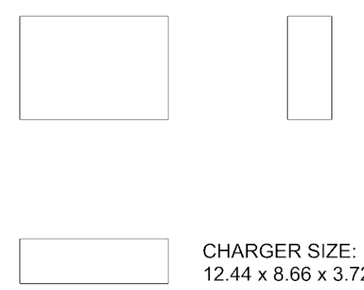

1 BATTERY HULL SECTION 1:12

2 CHARGER DETAIL 1:12

NO.	ISSUE	DATE
1	ADDENDUM SET 1	1 September 2016

SAN ANTONIO RIVERBOATS
PROTOTYPE

[METALAB ARCHITECTURE]
20 N Sampson St
Houston, Texas 77003
713.426.3640
www.metalabstudio.com
info@metalabsudio.com
ARCHITECT

Great Plains Design
Group, Inc.
1004 Lamar Drive,
Lafayette, Indiana 47905
NAVAL ARCHITECT

SAR

BID SET
NOT FOR CONSTRUCTION

SHEET SIZE: 12 X 18
SCALE AS NOTED

BATTERY AND CHARGER SECTION AND DETAILS

E-2

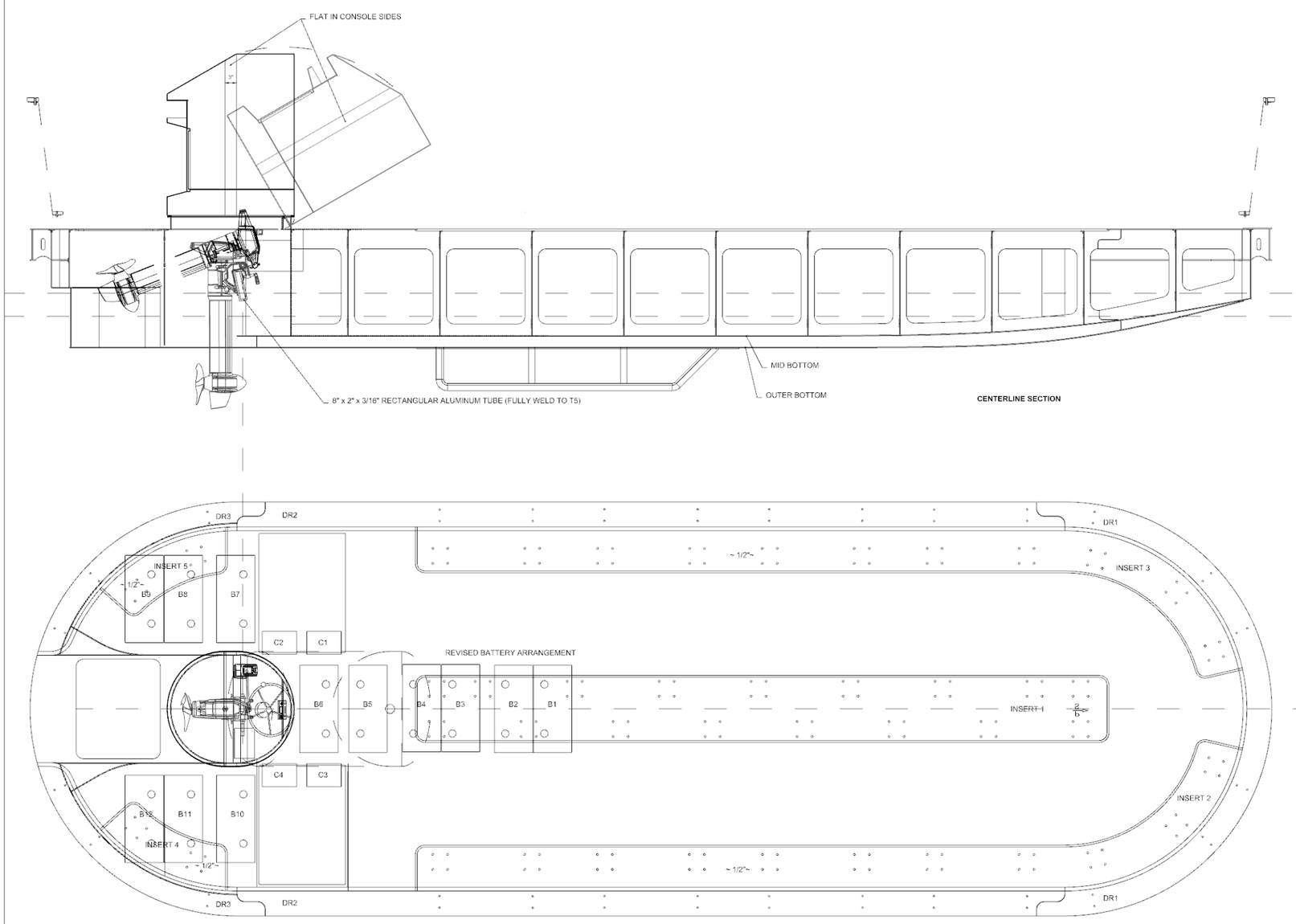

CENTERLINE SECTION

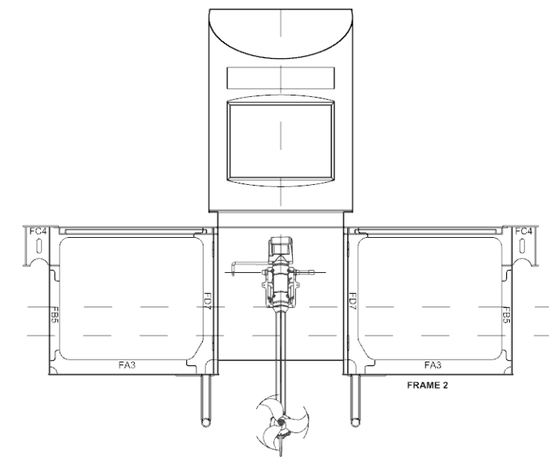

FRAME 2

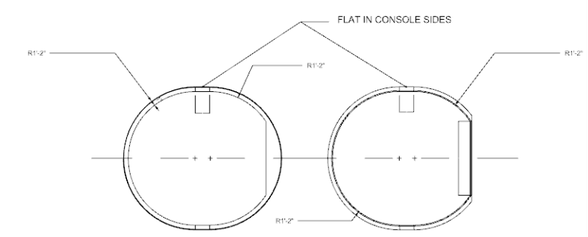

PLAN OF CONSOLE BASE

CONSOLE UPSTAND ON DECK

1 PROTOTYPE WELL ARRANGEMENT (REF ONLY) 1:30

NOTE: MUST BE COMPLETED TO THE SATISFACTION OF METALAB STUDIO (SEE SPECS)

NO.	ISSUE	DATE
1	ADDENDUM SET 1	1 September 2016

SAN ANTONIO RIVERBOATS
PROTOTYPE

[METALAB ARCHITECTURE]
20 N Sampson St
Houston, Texas 77003
713.426.3640
www.metalabstudio.com
info@metalabstudio.com
ARCHITECT

Gerald Peters Design
Group, Inc.
NAVAL ARCHITECT

SAR

BID SET
NOT FOR CONSTRUCTION

SCALE AS NOTED
SHEET SIZE: 12 X 18

PROTOTYPE WELL ARRANGEMENT (REF ONLY)

E-3

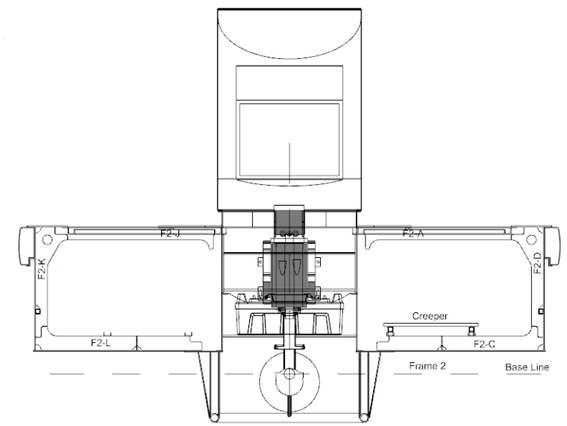

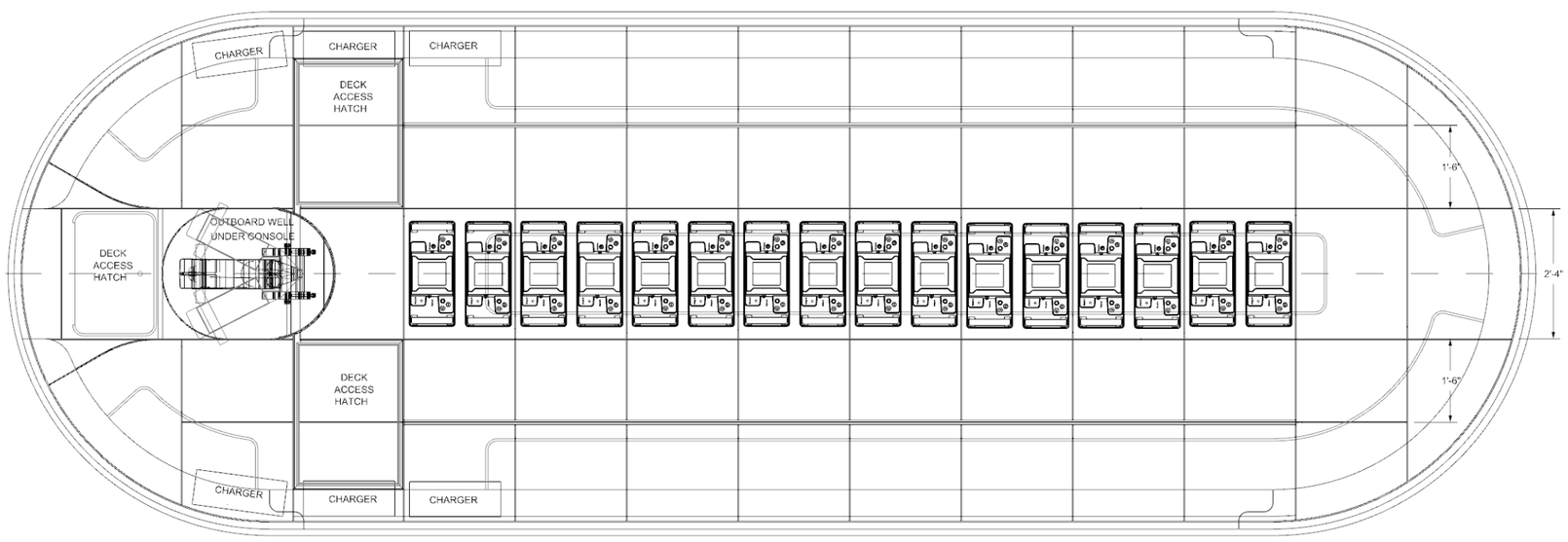

1 ELECTRIC WELL ARRANGEMENT 1:30

NOTE: MUST BE COMPLETED TO THE SATISFACTION OF METALAB STUDIO (SEE SPECS)

NO.	ISSUE	DATE
1	ADDENDUM SET 1	1 September 2016

SAN ANTONIO RIVERBOATS
PROTOTYPE

[METALAB ARCHITECTURE]
20 N Sampson St
Houston, Texas 77003
713.426.3640
www.metalabstudio.com
info@metalabstudio.com
ARCHITECT

Gerald Peters Design
Gerald Peters, Jr.
NAVAL ARCHITECT

SAR

BID SET
NOT FOR CONSTRUCTION

SHEET SIZE: 12 X 18
SCALE AS NOTED

ELECTRIC WELL ARRANGEMENT

E-4

FOR INFORMATION AND COMPONENTS RELATED TO
THE LIGHTING SYSTEM, REFER TO SPECIFICATIONS

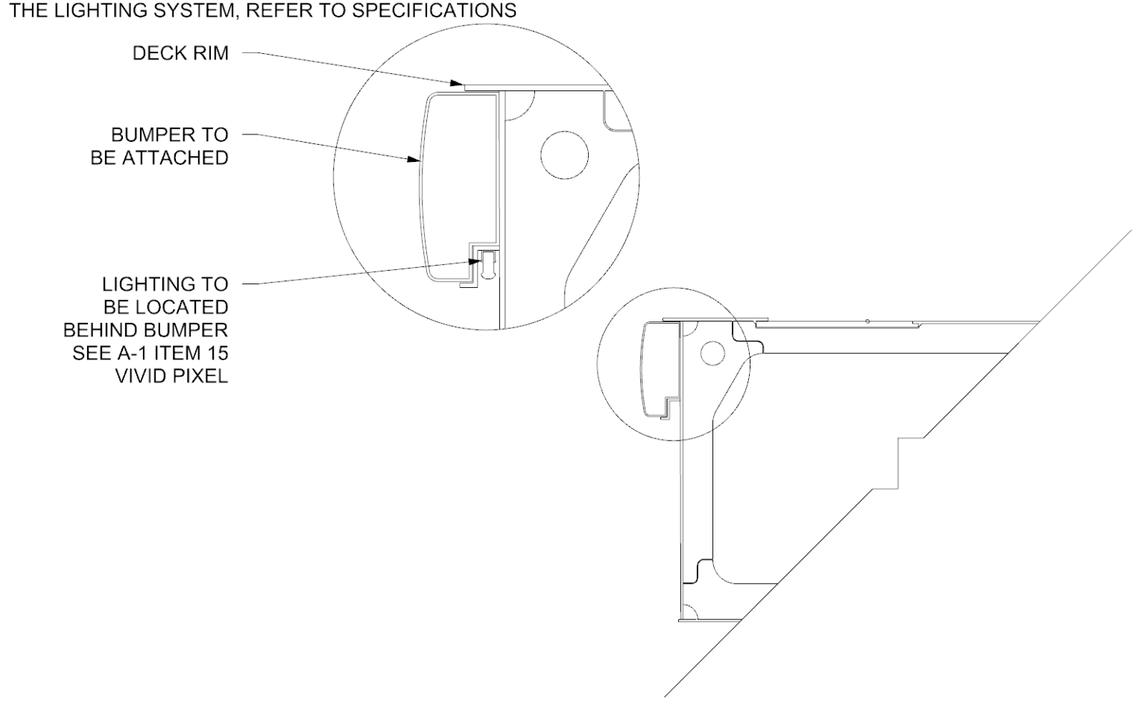

2 SECTION DETAIL

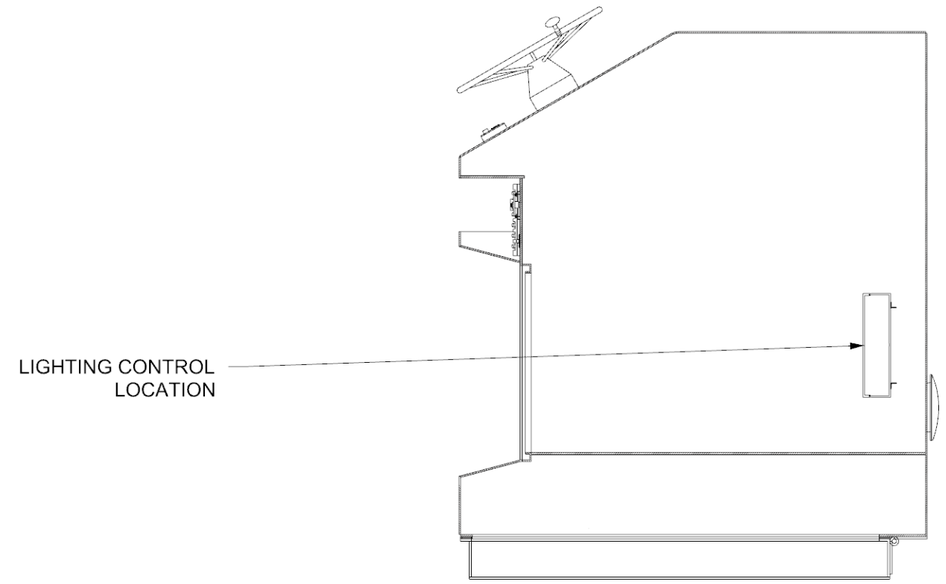

RIGHT VIEW OF CONSOLE

3 CONTROL DETAIL 1:12

1 LIGHTING PLAN 1:24

NOTE: MUST BE COMPLETED TO THE SATISFACTION OF METALAB STUDIO (SEE SPECS)

NO.	ISSUE	DATE
1	ADDENDUM SET 1	1 September 2016

SAN ANTONIO RIVERBOATS
PROTOTYPE

[METALAB ARCHITECTURE]
20 N Sampson St
Houston, Texas 77003
713.426.3640
www.metalabstudio.com
info@metalabstudio.com
ARCHITECT

Gensler Design & Planning
1504 Lamar Drive,
Houston, Texas 77010
NAVAL ARCHITECT

SAR

BID SET
NOT FOR CONSTRUCTION

SHEET SIZE: 12 X 18
SCALE AS NOTED

LIGHTING PLAN
AND LIGHTING
DETAILS

E-5

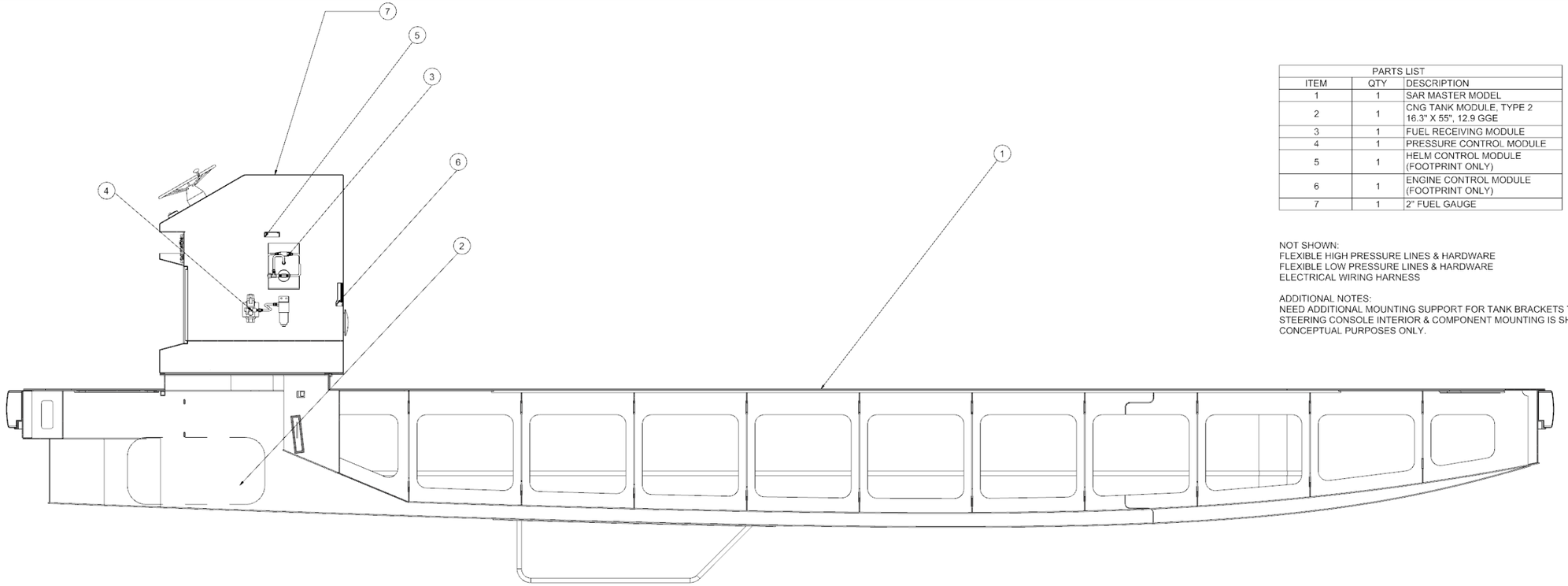

2 CNG SECTION 1:24

PARTS LIST		
ITEM	QTY	DESCRIPTION
1	1	SAR MASTER MODEL
2	1	CNG TANK MODULE, TYPE 2 16.3" X 55", 12.9 GGE
3	1	FUEL RECEIVING MODULE
4	1	PRESSURE CONTROL MODULE
5	1	HELM CONTROL MODULE (FOOTPRINT ONLY)
6	1	ENGINE CONTROL MODULE (FOOTPRINT ONLY)
7	1	2" FUEL GAUGE

NOT SHOWN:
FLEXIBLE HIGH PRESSURE LINES & HARDWARE
FLEXIBLE LOW PRESSURE LINES & HARDWARE
ELECTRICAL WIRING HARNESS

ADDITIONAL NOTES:
NEED ADDITIONAL MOUNTING SUPPORT FOR TANK BRACKETS TO RIB STRUCTURE
STEERING CONSOLE INTERIOR & COMPONENT MOUNTING IS SHOW FOR CONCEPTUAL PURPOSES ONLY.

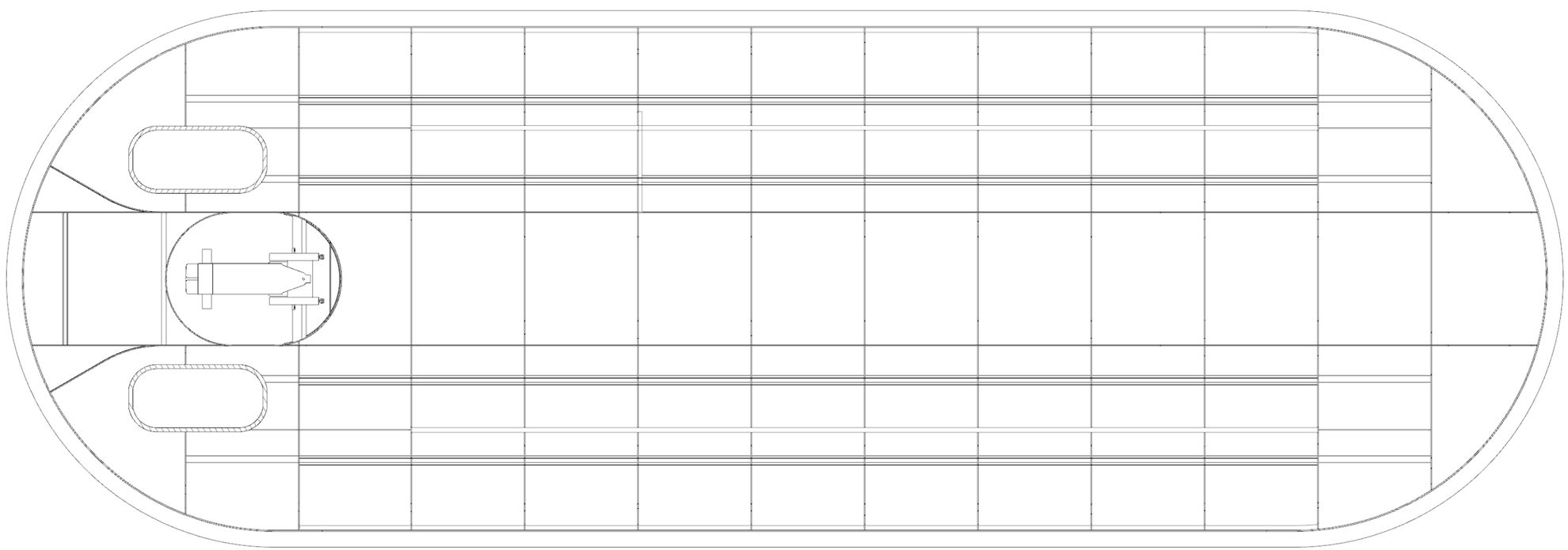

1 CNG PLAN 1:24

NOTE: MUST BE COMPLETED TO THE SATISFACTION OF METALAB STUDIO (SEE SPECS)

NO.	ISSUE	DATE
1	ADDENDUM SET 1	1 September 2016

SAN ANTONIO RIVERBOATS
PROTOTYPE

[METALAB ARCHITECTURE]
20 N Sampson St
Houston, Texas 77003
713.426.3640
www.metalabstudio.com
info@metalabstudio.com
ARCHITECT

Great Plains Design Group, Inc.
3004 Cabot Drive,
Lancaster, Texas 75146
NAVAL ARCHITECT

SAR

SHEET SIZE: 12 X 18
SCALE AS NOTED

BID SET
NOT FOR CONSTRUCTION

CNG PLAN
AND SECTION

N-1

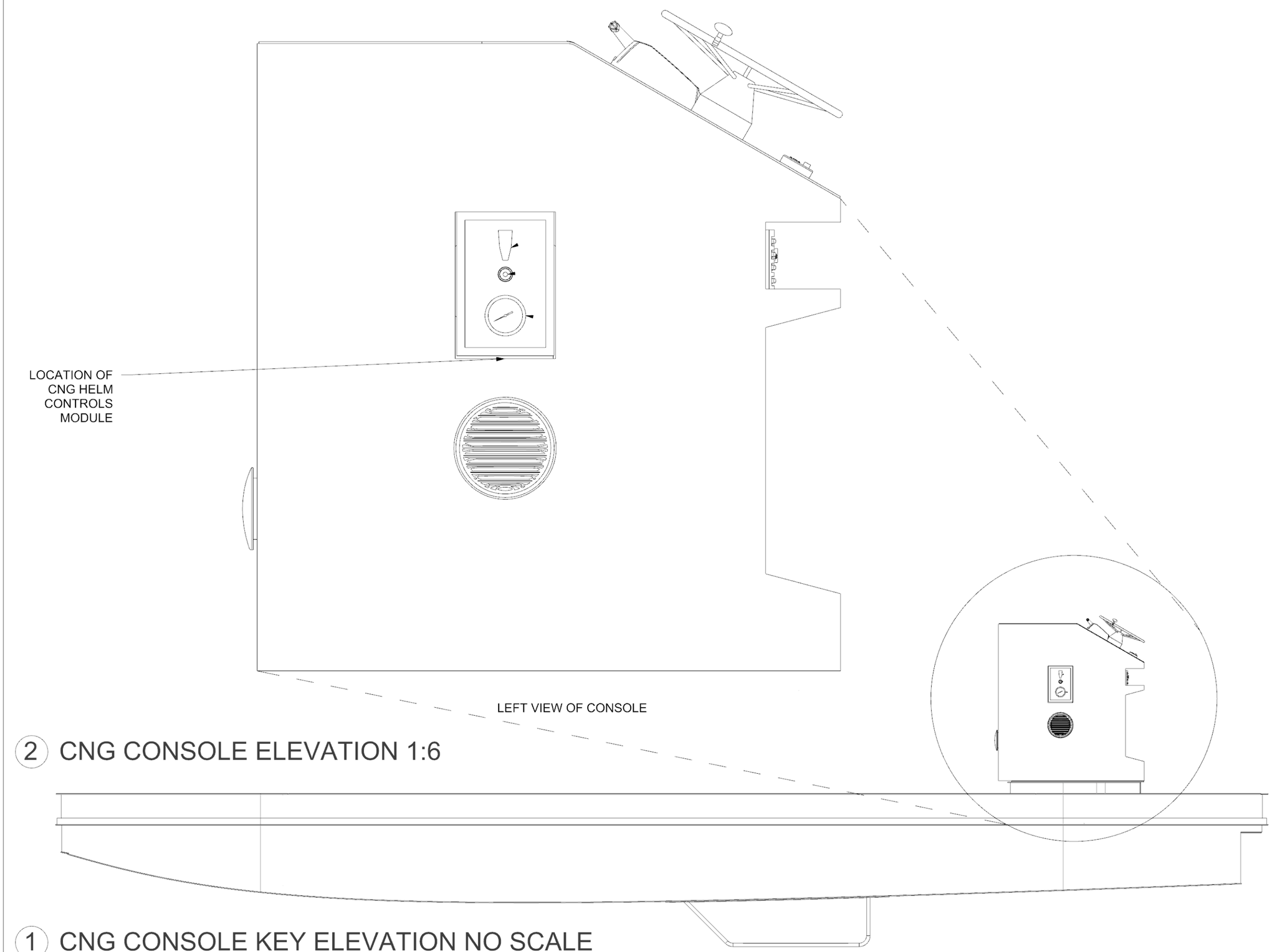

2 CNG CONSOLE ELEVATION 1:6

1 CNG CONSOLE KEY ELEVATION NO SCALE

NOTE: MUST BE COMPLETED TO THE SATISFACTION OF METALAB STUDIO (SEE SPECS)

NO.	ISSUE	DATE
1	ADDENDUM SET 1	1 September 2016

SAN ANTONIO RIVERBOATS
PROTOTYPE

[METALAB ARCHITECTURE]
20 N Sampson St
Houston, Texas 77003
713.426.3640
www.metalabstudio.com
info@metalabstudio.com
ARCHITECT

Gerald Hines Design
Project Manager
1004 Lamar Drive,
Houston, Texas
77010
NAVAL ARCHITECT

SAR

SHEET SIZE: 12 X 18
SCALE AS NOTED

BID SET
NOT FOR CONSTRUCTION

CNG CONSOLE
DETAIL

N-2

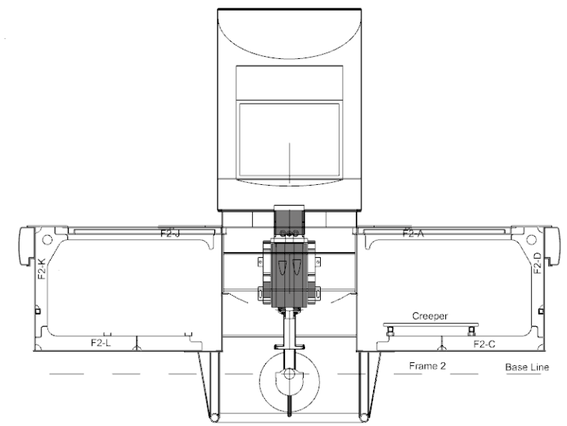

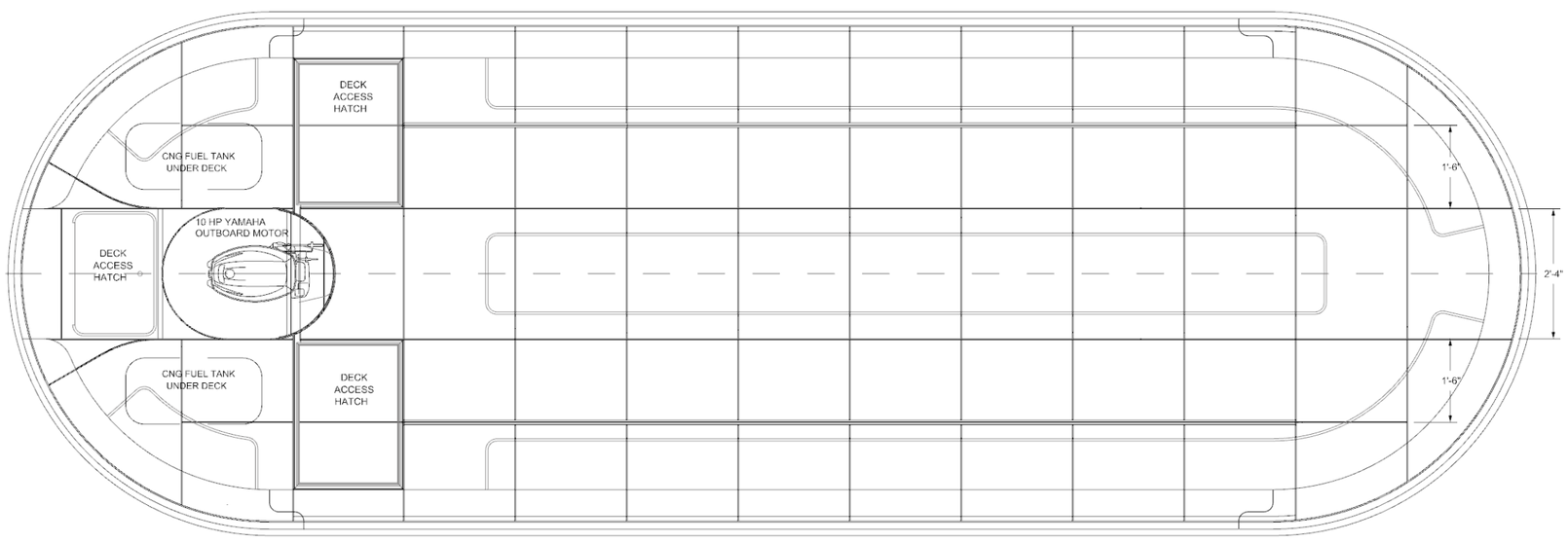

1 CNG WELL ARRANGEMENT 1:30

NOTE: MUST BE COMPLETED TO THE SATISFACTION OF METALAB STUDIO (SEE SPECS)

NO.	ISSUE	DATE
1	ADDENDUM SET 1	1 September 2016

SAN ANTONIO RIVERBOATS
PROTOTYPE

[METALAB ARCHITECTURE]
20 N Sampson St
Houston, Texas 77003
713.426.3640
www.metalabstudio.com
info@metalabstudio.com
ARCHITECT

Great Plains Design Group, Inc.
10001 Cutler Drive,
Houston, Texas 77036
NAVAL ARCHITECT

SAR

SHEET SIZE: 12 X 18
SCALE AS NOTED

BID SET
NOT FOR CONSTRUCTION

CNG WELL ARRANGEMENT

N-3