SAN ANTONIO RIVERBOATS DRAWING SET APPENDIX G

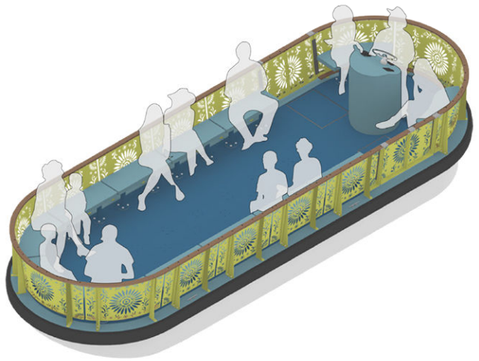

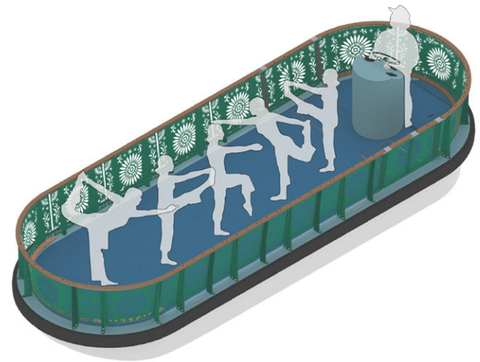

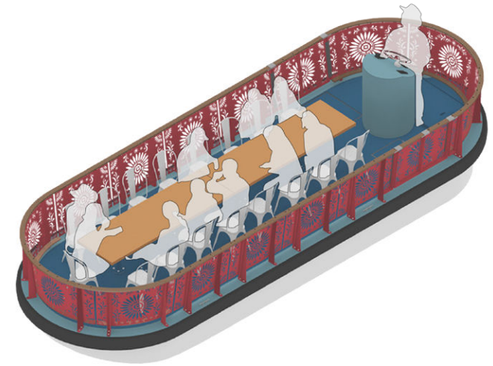

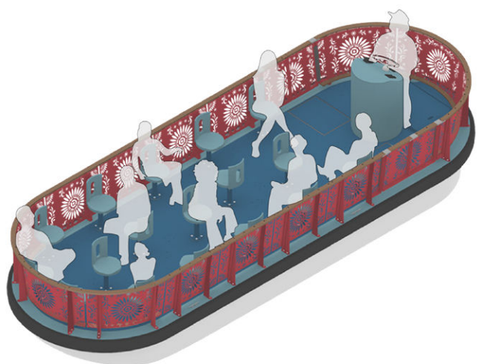

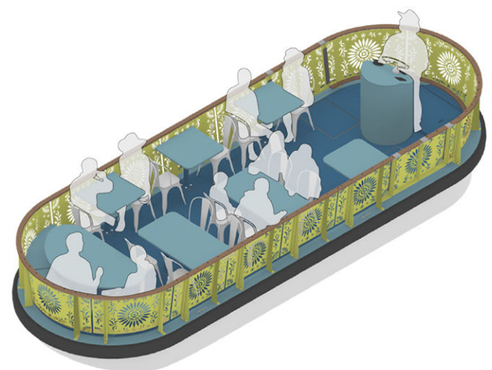

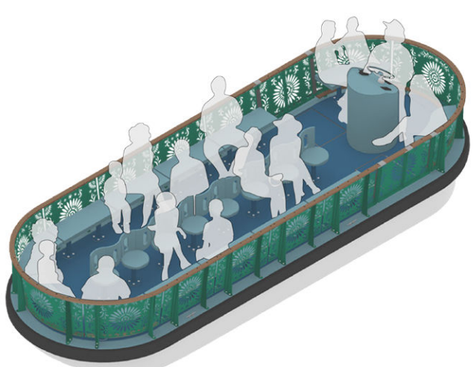

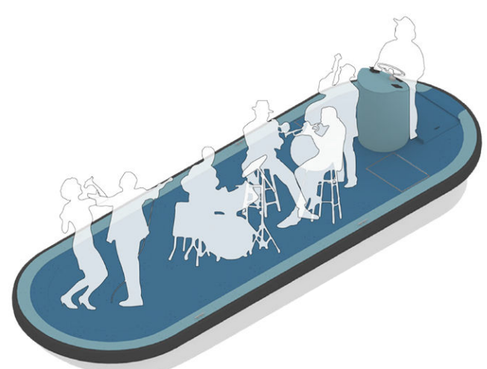

DRAWING SET LIST	TITLE
I-SERIES	INDEX DRAWINGS
H-SERIES	HULL DRAWINGS
R-SERIES	RAIL DRAWINGS
S-SERIES	SEAT AND DINING DRAWINGS
D-SERIES	DECK DRAWINGS
C-SERIES	CONSOLE DRAWINGS
A-SERIES	ACCESSORY DRAWINGS
E-SERIES	ELECTRICAL DRAWINGS
N-SERIES	CNG DRAWINGS

NO.	ISSUE	DATE
1	BID SET	3 August 2016

SAN ANTONIO RIVERBOATS
PROTOTYPE

[METALAB ARCHITECTURE]
20 N Sampson St
Houston, Texas 77003
713.426.3640
www.metalabstudio.com
info@metalabstudio.com
ARCHITECT

Great Rivers Design
Great Rivers, Inc.
1006 Cantu Drive,
Lexington, Texas 78947
NAVAL ARCHITECT

SAR

SHEET SIZE: 12 X 18
SCALE AS NOTED

BID SET
NOT FOR CONSTRUCTION

TITLE SHEET

SAR

SAN ANTONIO RIVERBOATS DRAWING INDEX 1

HULL DRAWINGS

DRAWING	TITLE
H-1	3D HULL STRUCTURAL IMAGES
H-2	STRUCTURAL AXON ASSEMBLY DRAWINGS
H-3	RING FRAME ASSEMBLY
H-4	RIB FRAME ASSEMBLY
H-5	LONGITUDINAL ASSEMBLY
H-6	REFERENCE FRAMES AND LONGITUDINALS
H-7	HULL BOTTOM VIEW PLAN AND KEEL PLAN AND ASSEMBLY
H-8	PLATING DETAILS
H-9	HATCH AND SKEG DETAILS
H-10	RUBRAIL
H-11	HULL SECTION A
H-12	NESTING SHEETS 1
H-13	NESTING SHEETS 2
H-14	NESTING SHEETS 3

RAIL DRAWINGS

DRAWING	TITLE
R-1	RAIL PLAN AND RAIL SCHEDULE
R-2	RAIL HARDWARE SCHEDULE, DOOR DETAILS AND HARDWARE SCHEDULE
R-3	RAIL STANCHION ASSEMBLY DRAWINGS
R-4	RAIL STANCHION DETAILS
R-5	RAIL IPE PLAN AND DETAILS
R-6	RAIL ASSEMBLY DRAWINGS 1 (S-SERIES)
R-7	RAIL ASSEMBLY DRAWINGS 2 (C-SERIES)
R-8	RAIL ASSEMBLY DRAWINGS 3 (L-SERIES)
R-9	RAIL ASSEMBLY DRAWINGS 4 (D-SERIES)
R-10	RAIL DOOR LOCKING MECHANISM 1 (D-SERIES)
R-11	RAIL DOOR LOCKING MECHANISM 2 (D-SERIES)
R-12	RAIL ARTBOARD AREA 1 (S-SERIES)
R-13	RAIL ARTBOARD AREA 2 (C-SERIES)
R-14	RAIL ARTBOARD AREA 3 (L-SERIES)
R-15	RAIL ARTBOARD AREA 4 (D-SERIES)
R-16	RAIL ARTBOARD SAMPLE 1 (S-SERIES)
R-17	RAIL ARTBOARD SAMPLE 2 (C-SERIES)
R-18	RAIL ARTBOARD SAMPLE 3 (L-SERIES)
R-19	RAIL ARTBOARD SAMPLE 4 (D-SERIES)

NO.	ISSUE	DATE
1	BID SET	2 August 2016

SAN ANTONIO RIVERBOATS
PROTOTYPE

[METALAB ARCHITECTURE]
20 N Sampson St
Houston, Texas 77003
713.426.3640
www.metalabstudio.com
info@metalabstudio.com
ARCHITECT

Gregg Fabian Design
Naval Architecture
3005 Canal Drive,
New Orleans, La
Louisiana 70130
NAVAL ARCHITECT

SAR

BID SET
NOT FOR CONSTRUCTION

SHEET SIZE: 12 X 18
SCALE AS NOTED

DRAWING INDEX
1 OF 4

SAR

SAN ANTONIO RIVERBOATS DRAWING INDEX 2

SEAT AND DINING DRAWINGS

DRAWING	TITLE
S-1	SEATING CONFIGURATION TYPE 1 & 2
S-2	SEATING CONFIGURATION TYPE 3 & 4
S-3	SEATING CONFIGURATION TYPE 5 & 6
S-4	BENCH PLAN AND SCHEDULE
S-5	BENCH HARDWARE SCHEDULE AND DETAILS
S-6	BENCH POST ASSEMBLY DRAWINGS 1
S-7	BENCH POST ASSEMBLY DRAWINGS 2
S-8	BENCH ASSEMBLY DRAWINGS 1 (S-SERIES)
S-9	BENCH ASSEMBLY DRAWINGS 2 (C-SERIES)
S-10	BENCH ASSEMBLY DRAWINGS 3 (L-SERIES)
S-11	BENCH ASSEMBLY DRAWINGS 4 (B-SERIES)
S-12	CHAIR PLAN AND SCHEDULE
S-13	CHAIR HARDWARE SCHEDULE AND DETAILS
S-14	CHAIR ASSEMBLY DRAWINGS
S-15	GROUP DINING PLAN AND SCHEDULE
S-16	GROUP DINING HARDWARE SCHEDULE AND DETAILS
S-17	GROUP DINING POST ASSEMBLY DRAWINGS
S-18	GROUP DINING ASSEMBLY DRAWINGS
S-19	BISTRO DINING PLAN AND SCHEDULE

SEAT AND DINING DRAWINGS (CONT.)

DRAWING	TITLE
S-20	BISTRO DINING HARDWARE SCHEDULE AND DETAILS
S-21	BISTRO DINING POST ASSEMBLY PIECES
S-22	BISTRO DINING POST ASSEMBLY DRAWINGS
S-23	BISTRO DINING ASSEMBLY DRAWINGS 2 (S-SERIES)
S-24	BISTRO DINING ASSEMBLY DRAWINGS 2 (L-SERIES)
S-25	BISTRO DINING ASSEMBLY DRAWINGS 3 (B-SERIES)

DECK DRAWINGS

DRAWING	TITLE
D-1	DECK PLAN AND DECK RIM PLATE
D-2	DECK ASSEMBLY
D-3	DECK / INTERNAL STRUCTURE
D-4	DECK HARDWARE SCHEDULE AND ATTACHMENT METHOD

CONSOLE DRAWINGS

DRAWING	TITLE
C-1	CONSOLE SECTION, DETAILS, AND CUT FILES
C-2	CONSOLE MOUNTING SCHEDULE
C-3	CONSOLE ACCESSORY MOUNTING ASSEMBLY DRAWINGS

NO.	ISSUE	DATE
1	BID SET	2 August 2016

SAN ANTONIO RIVERBOATS
PROTOTYPE

[METALAB ARCHITECTURE]
20 N Sampson St
Houston, Texas 77003
713.426.3640
www.metalabstudio.com
info@metalabstudio.com
ARCHITECT

Gresham Smith and Partners, Inc.
3001 Carol Drive,
Kenner, Louisiana 70062
NAVAL ARCHITECT

SAR

BID SET
NOT FOR CONSTRUCTION

SCALE AS NOTED
SHEET SIZE: 12 X 18

DRAWING INDEX
2 OF 4

SAR

SAN ANTONIO RIVERBOATS DRAWING INDEX 3

ACCESSORY DRAWINGS

DRAWING	TITLE
A-1	ACCESSORY PLAN AND SCHEDULE
A-2	RAMP ASSEMBLY DRAWINGS

ELECTRICAL DRAWINGS

DRAWING	TITLE
E-1	BATTERY AND CHARGER SECTION AND DETAILS
E-2	BATTERY AND CHARGER PLAN AND SCHEDULE
E-3	PROTOTYPE WELL ARRANGEMENT (REF ONLY)
E-4	ELECTRIC WELL ARRANGEMENT
E-5	LIGHTING PLAN AND LIGHTING DETAILS

CNG DRAWINGS

DRAWING	TITLE
N-1	CNG PLAN AND SECTION
N-2	CNG CONSOLE DETAIL
N-3	CNG WELL ARRANGEMENT

QUANTITIES BY CUT LENGTH:
HULL 1/2" ALUMINUM = 231'
HULL 1/4" ALUMINUM = 500'
HULL 3/16" ALUMINUM = 1842'

RAIL 1/8" ALUMINUM = 1822'
RAIL 3/16" ALUMINUM = 534'
RAIL 5/4" IPE = 195'
RAIL 3/4" IPE = 58'

BENCH 3/16" ALUMINUM = 155'
BENCH 3/4" PLYWOOD = 142'
CHAIR 3/16" ALUMINUM = 102'

GROUP DINING 3/16" ALUMINUM = 40'
GROUP DINING BOWLING TABLE = 46' (HOLES AND EXT. CUTS)

SPLIT DINING 3/16" ALUMINUM = 83'

NO.	ISSUE	DATE
1	BID SET	2 August 2016

SAN ANTONIO RIVERBOATS
PROTOTYPE

[METALAB ARCHITECTURE]
20 N Sampson St
Houston, Texas 77003
713.426.3640
www.metalabstudio.com
info@metalabstudio.com
ARCHITECT

Gregg Valera, Design
Gregg Valera, Inc.
300E Gum Drive,
Slidell, LA 70461
Louisiana 70130
NAVAL ARCHITECT

SAR

BID SET
NOT FOR CONSTRUCTION

SHEET SIZE: 12 X 18
SCALE AS NOTED

DRAWING INDEX
3 OF 4

SAR

SAN ANTONIO RIVERBOATS COLOR INDEX

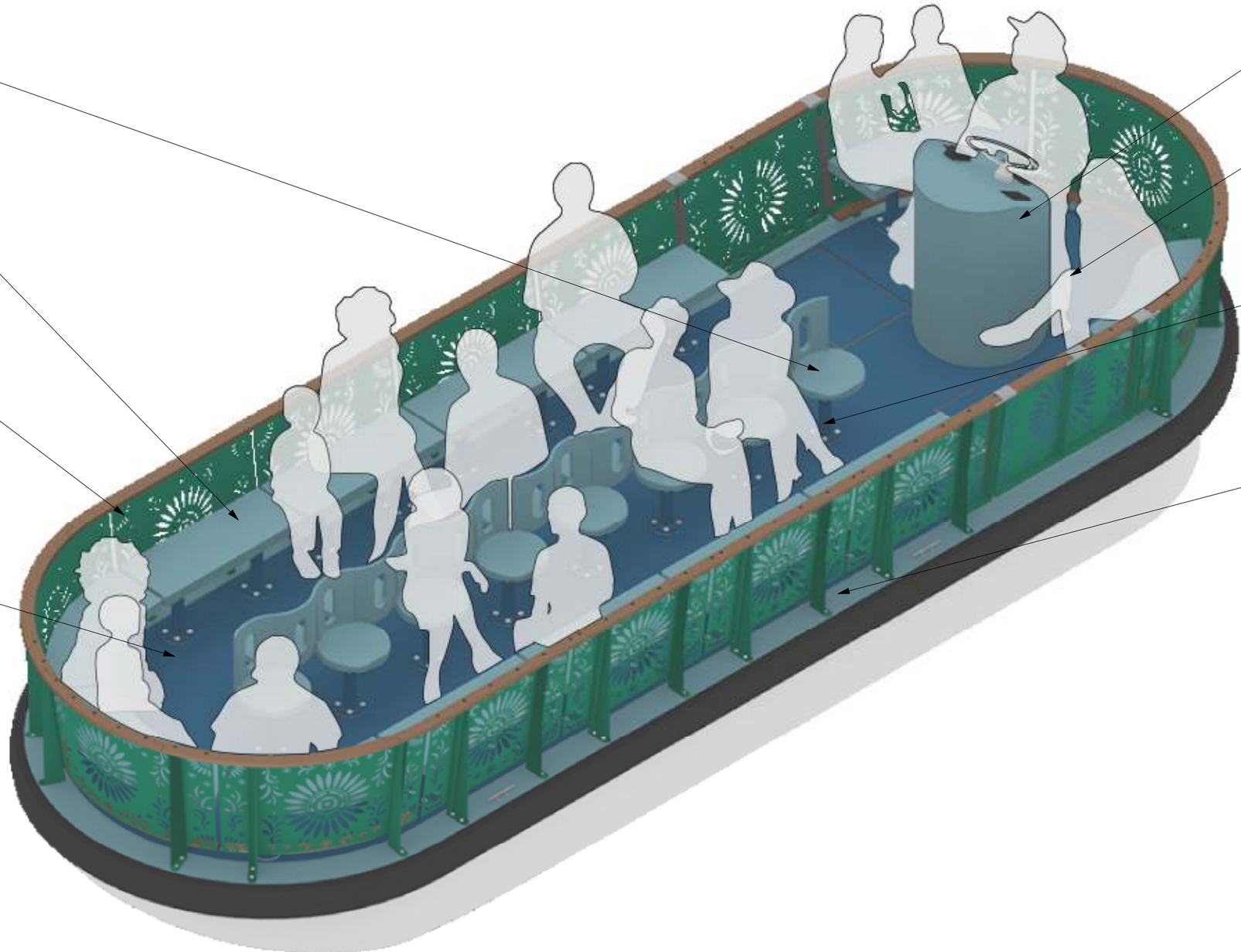

CHAIR
ROTO MOLDED
COLOR TO MATCH
BENCH FABRIC
SEE S-14

BENCH FABRIC
BOLTA FLEX
VINYL COLORGUARD
518635 HORIZON BLUE
363553

METAL RAILING
JONES BLAIR
SS-203
HHY-B30293

DECK
JONES BLAIR
ROD'S BLUE
HHN-B51513

CONSOLE
JONES BLAIR
CHARLOTTE SLATE
A2N-D51531

RAMP/WEAR MAT
JONES BLAIR
ROD'S BLUE
HHN-B51513

BENCH & CHAIR POSTS
JONES BLAIR
ROD'S BLUE
HHN-B51513

RIM PLATE
JONES BLAIR
CHARLOTTE SLATE
A2N-D51531

NOTE: MUST BE COMPLETED TO THE SATISFACTION OF METALAB STUDIO (SEE SPECS)

NO.	ISSUE	DATE
1	BID SET	3 August 2016

SAN ANTONIO RIVERBOATS
PROTOTYPE

[METALAB ARCHITECTURE]
20 N Sampson St
Houston, Texas 77003
713.426.3640
www.metalabstudio.com
info@metalabstudio.com
ARCHITECT

Gresham Smith and Partners
3001 Gentilly Blvd.
New Orleans, LA 70122
Louisiana 70116
NAVAL ARCHITECT

SAR

SHEET SIZE: 12 X 18
SCALE AS NOTED

BID SET
NOT FOR CONSTRUCTION

COLOR INDEX
3 OF 4

SAR

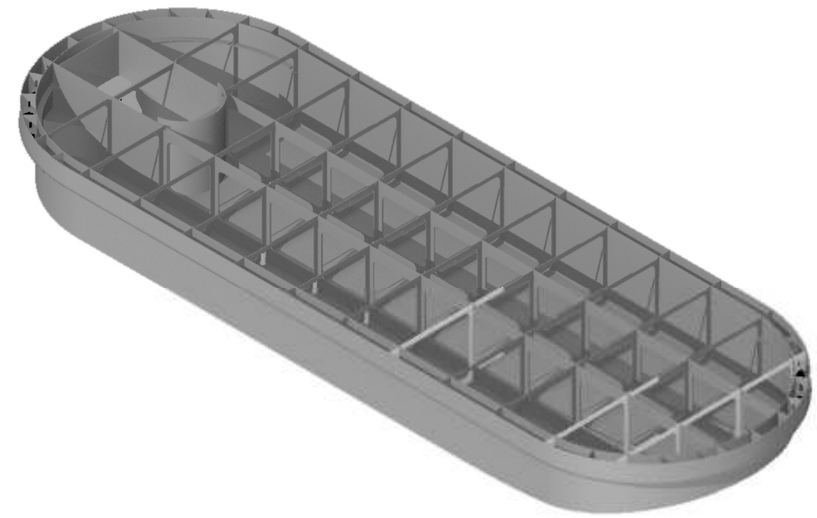

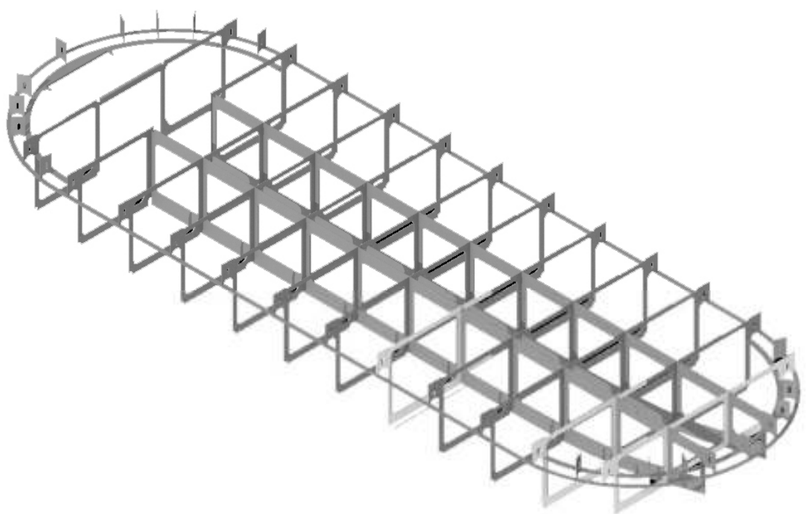

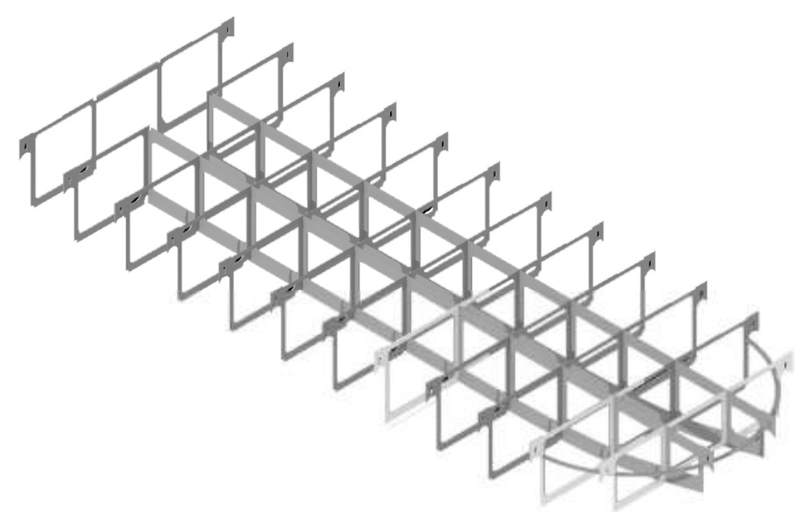

1 3D VIEWS OF HULL STRUCTURE NO SCALE

NOTE: ALL CUT FILES TO BE SUPPLIED TO WINNING BIDDER
NOTE: MUST BE COMPLETED TO THE SATISFACTION OF METALAB STUDIO (SEE SPECS)

NO.	ISSUE	DATE
1	BID SET	2 August 2016

SAN ANTONIO RIVERBOATS
PROTOTYPE

[METALAB ARCHITECTURE]
20 N Sampson St
Houston, Texas 77003
713.426.3640
www.metalabstudio.com
info@metalabstudio.com
ARCHITECT

George Prince Design
Naval Architecture
3005 Canal Drive,
New Orleans, La.
Louisiana 70118
NAVAL ARCHITECT

SAR

SHEET SIZE: 12 X 18
SCALE AS NOTED

BID SET
NOT FOR CONSTRUCTION

3D HULL STRUCTURAL IMAGES

H-1

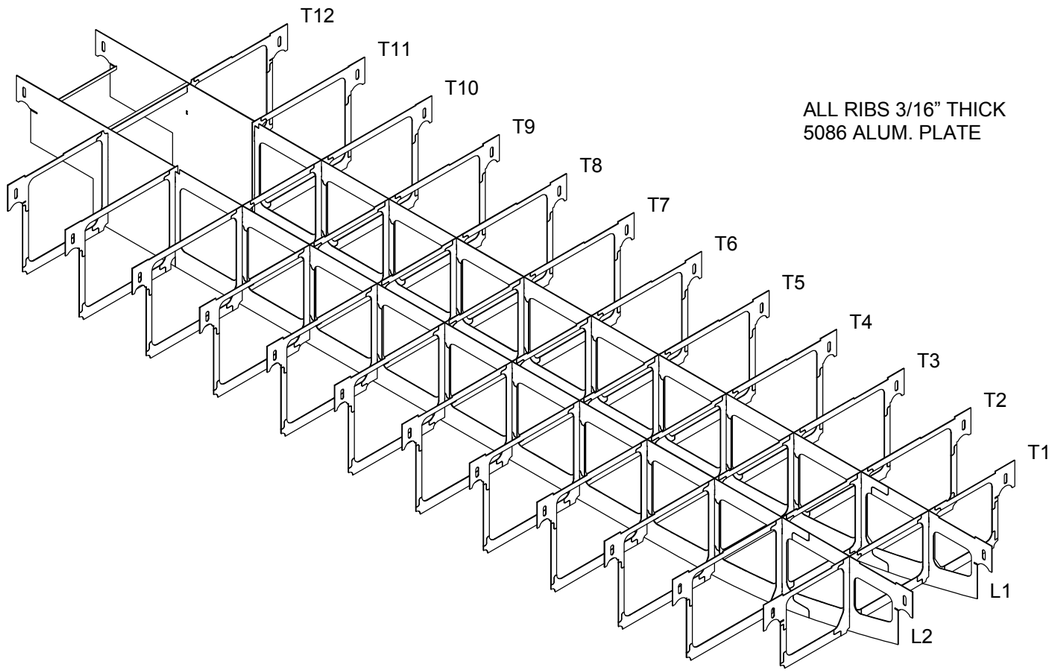

ALL RIBS 3/16" THICK
5086 ALUM. PLATE

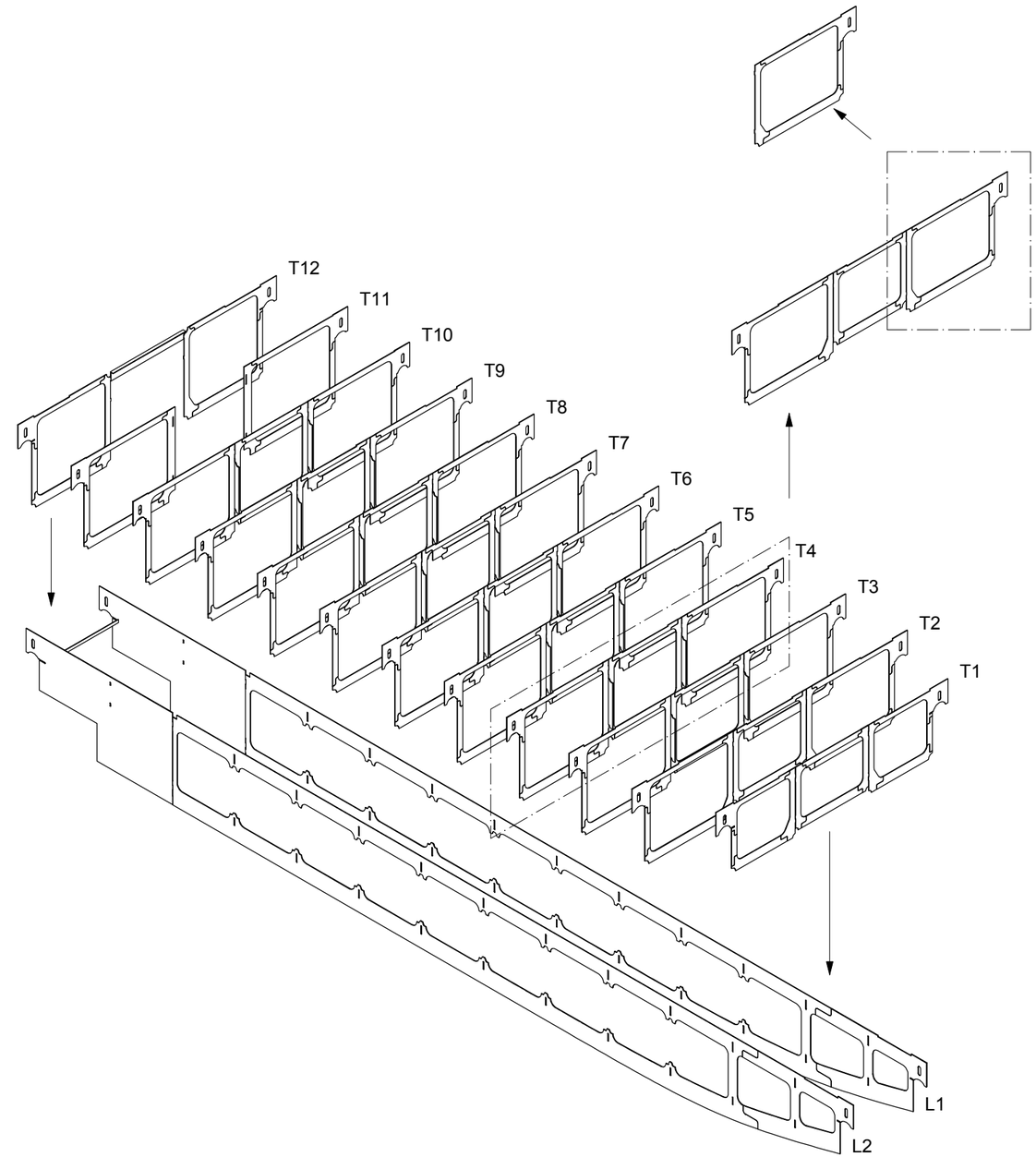

2 STRUCTURAL AXON ASSEMBLY DRAWINGS 1:36

NOTE: ALL CUT FILES TO BE SUPPLIED TO WINNING BIDDER
NOTE: MUST BE COMPLETED TO THE SATISFACTION OF METALAB STUDIO (SEE SPECS)

NO.	ISSUE	DATE
1	BID SET	2 August 2016

SAN ANTONIO RIVERBOATS
PROTOTYPE

[METALAB ARCHITECTURE]
20 N Sampson St
Houston, Texas 77003
713.426.3640
www.metalabstudio.com
info@metalabstudio.com
ARCHITECT

Gensler Helms Design Group, Ltd.
3005 Carroll Ave.
Galveston, Texas 77550
(409) 762-7550
NAVAL ARCHITECT

SAR

SHEET SIZE: 12 X 18
SCALE AS NOTED

BID SET
NOT FOR CONSTRUCTION

STRUCTURAL
AXON ASSEMBLY
DRAWINGS

H-2

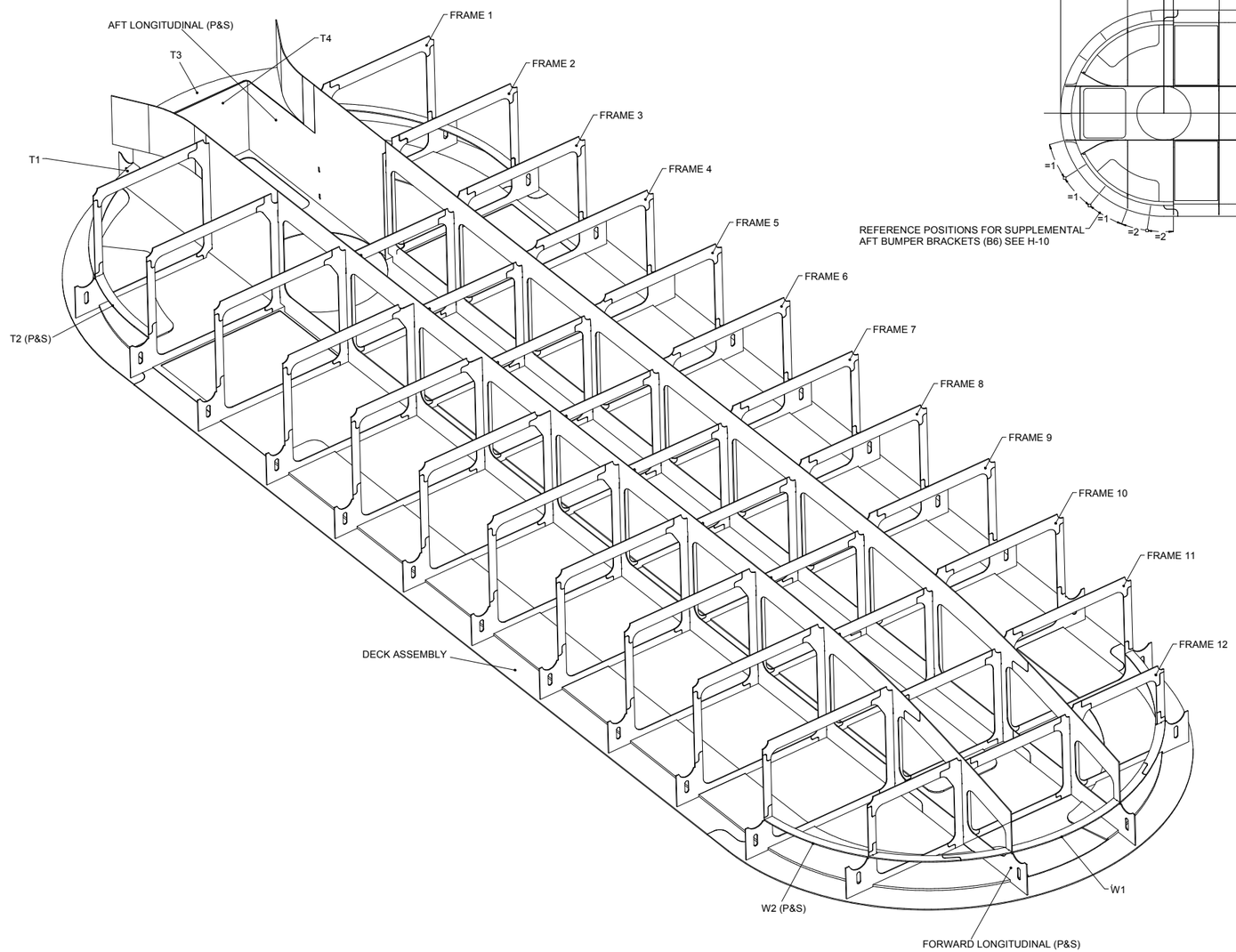

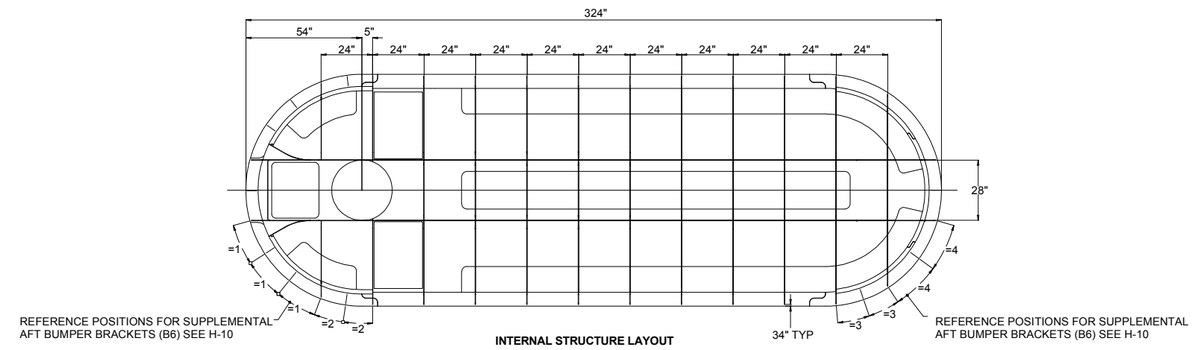

INTERNAL STRUCTURE LAYOUT

ASSEMBLY NOTES AND RECOMMENDED PROCEDURE:

1. IT IS RECOMMENDED TO ASSEMBLE THE MID FRAME AND FORWARE LONGITUDINALS AS A SUB ASSEMBLY AND FULLY WELD BEFORE PLACING ONTO THE DECK ASSEMBLY. ENSURE ALL FRAME AND LONGITUDINAL PARTS ARE SQUARE TO EACH OTHER. THE HULL BOTTOM MID PLATES (HB5 & HB6) MAY BE ADDED AT THIS TIME TO RESIST RACKING AND TO ALLOW FOR FULL WELD OUT OF THE BOTTOM MID PLATES IN AN ACCESSIBLE POSITION.

2. PORT AND STARBOARD FRAME PARTS WILL THEN BE ADDED, USING THE REMAINDER OF THE LONGITUDINAL SLOTS TO LOCATE.

3. ONCE ALL INTERNAL MEMBERS HAVE BEEN LOCATED AND SECURED TO EACH OTHER, RAISE THE INTERNAL STRUCTURE FROM THE DECK ASSEMBLY, INSERT A FIRE BLANKET OR OTHER SUITABLE PROTECTION AND WELD OUT THE INTERNAL STRUCTURE. ONCE COMPLETE, DROP TO THE DECK ASSEMBLY AGAIN.

4. WITH REFERENCE TO H-8 PLATING DETAILS, IT IS LEFT TO THE YARD TO DETERMINE IF ANY PLATING IS ADDED BEFORE THE INTERNAL STRUCTURE IS FULLY WELDED.

1 RING FRAME ASSEMBLY

NOTE: ALL CUT FILES TO BE SUPPLIED TO WINNING BIDDER
NOTE: MUST BE COMPLETED TO THE SATISFACTION OF METALAB STUDIO (SEE SPECS)

NO.	ISSUE	DATE
1	BID SET	2 August 2016

SAN ANTONIO RIVERBOATS
PROTOTYPE

[METALAB ARCHITECTURE]
20 N Sampson St
Houston, Texas 77003
713.426.3640
www.metalabstudio.com
info@metalabstudio.com
ARCHITECT

Gregory Parker Design
Naval Architecture
3005 Canal Drive,
Kenner, Louisiana
Louisiana 70130
NAVAL ARCHITECT

SAR

SHEET SIZE: 12 X 18
SCALE AS NOTED

BID SET
NOT FOR CONSTRUCTION

RING FRAME ASSEMBLY

H-3

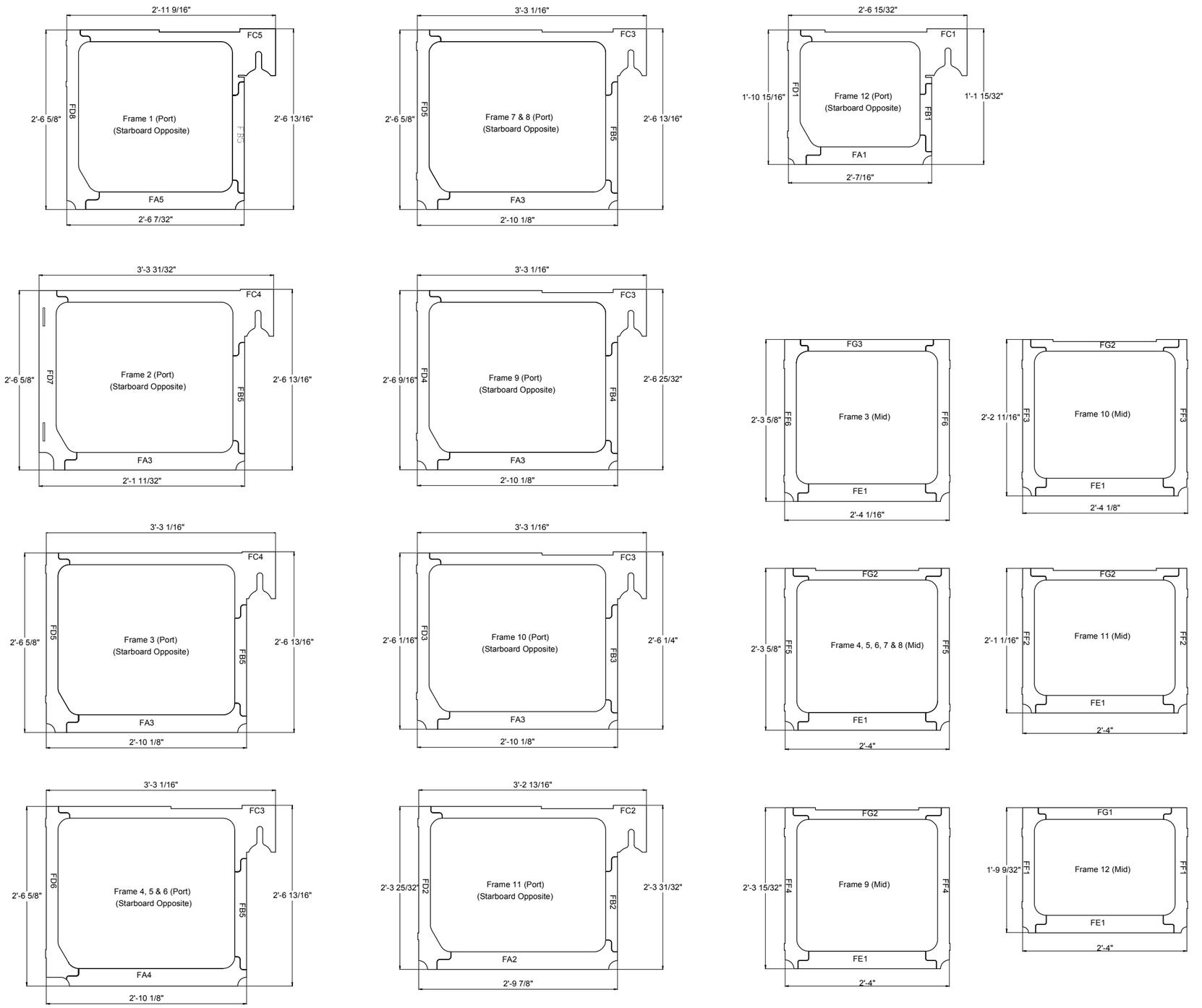

NOTES:

1. ALL FRAME PARTS ARE 3/16" ALUMINUM 5086 ALLOY.

2. ALL PART BUTT GAPS ARE 1/16" TYPICAL. ALL SLOT TOLERANCES ARE 1/16" ALSO.

3. THE INDIVIDUAL RING FRAME SHOULD BE ASSEMBLED AND FULLY WELDED ON A FLAT SURFACE. PRECAUTIONS SHOULD BE MADE TO ENSURE REFERENCE DIMENSIONS ARE MAINTAINED AND THE RING FRAME IS FLAT.

4. PORT AND STARBOARD FRAMES ARE OPPOSITE

5. LABEL EACH RING FRAME USING A BLACK MARKER WITH THE APPROPRIATE FRAME REFERENCE.

1 STRUCTURAL RIB ELEMENTS

NOTE: ALL CUT FILES TO BE SUPPLIED TO WINNING BIDDER
NOTE: MUST BE COMPLETED TO THE SATISFACTION OF METALAB STUDIO (SEE SPECS)

NO.	ISSUE	DATE
1	BID SET	3 August 2016

SAN ANTONIO RIVERBOATS
PROTOTYPE

[METALAB ARCHITECTURE]
20 N Sampson St
Houston, Texas 77003
713.426.3640
www.metalabstudio.com
info@metalabstudio.com
ARCHITECT

Gonzo Yates Design
Naval Architecture
3005 Canal Drive,
New Orleans, La.
Louisiana 70130
NAVAL ARCHITECT

SAR

BID SET
NOT FOR CONSTRUCTION

SHEET SIZE: 12 X 18
SCALE AS NOTED

RIB FRAME ASSEMBLY

H-4

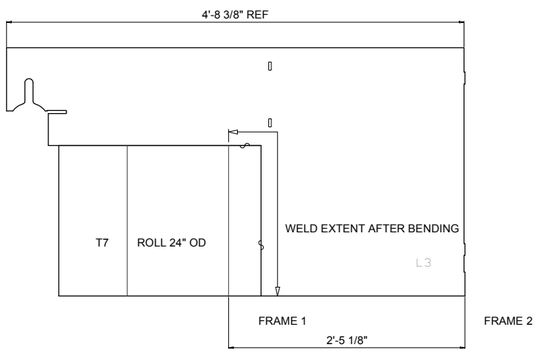

AFT LONGITUDINAL PART (QUANTITY 1 PORT, 1 STARBOARD)

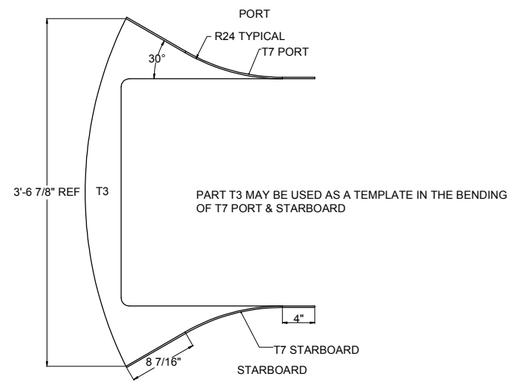

NOTES:

1. ALL LONGITUDINAL PARTS ARE 3/16" ALUMINUM 5086 ALLOY.

2. ALL PART BUTT GAPS ARE 1/16" TYPICAL. ALL SLOT TOLERANCES ARE 1/16" ALSO.

3. THE INDIVIDUAL LONGITUDINALS SHOULD BE ASSEMBLED AND FULLY WELDED ON A FLAT SURFACE. PRECAUTIONS SHOULD BE TAKEN TO ENSURE THE REFERENCE DIMENSIOSN ARE MAINTAINED AND THAT THE ASSEMBLY IS FLAT.

4. PORT AND STARBOARD LONGITUDINALS ARE OPPOSITE

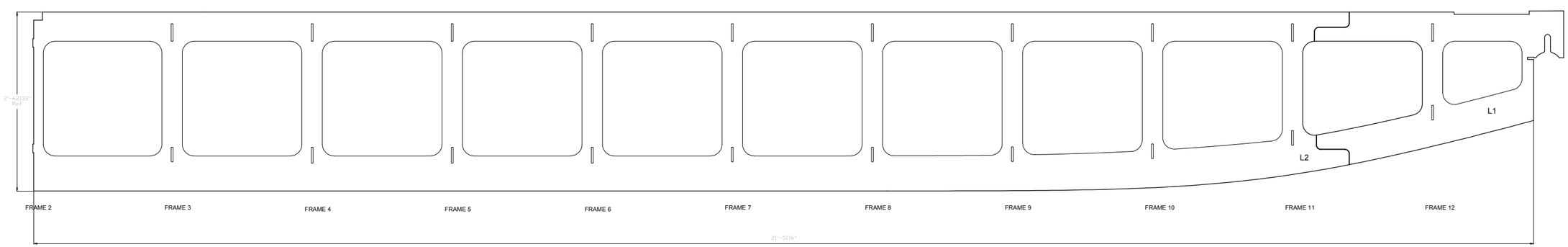

FORWARD LONGITUDINAL PART (QUANTITY 2)

1 LONGITUDINAL ASSEMBLY

NOTE: ALL CUT FILES TO BE SUPPLIED TO WINNING BIDDER
NOTE: MUST BE COMPLETED TO THE SATISFACTION OF METALAB STUDIO (SEE SPECS)

NO.	ISSUE	DATE
1	BID SET	3 August 2016

SAN ANTONIO RIVERBOATS
PROTOTYPE

[METALAB ARCHITECTURE]
20 N Sampson St
Houston, Texas 77003
713.426.3640
www.metalabstudio.com
info@metalabstudio.com
ARCHITECT

Gunn Yacht Design
Naval Architecture
3005 Carol Drive,
Kenner, Louisiana 70062
(504)468-9566
NAVAL ARCHITECT

SAR

SHEET SIZE: 12 X 18
SCALE AS NOTED

BID SET
NOT FOR CONSTRUCTION

LONGITUDINAL ASSEMBLY

H-5

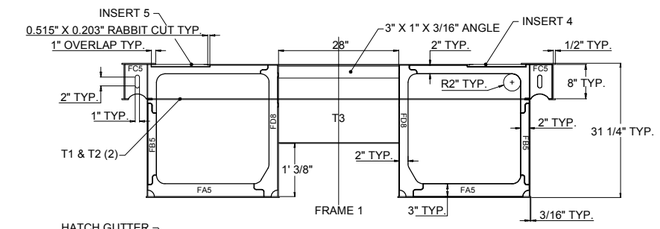

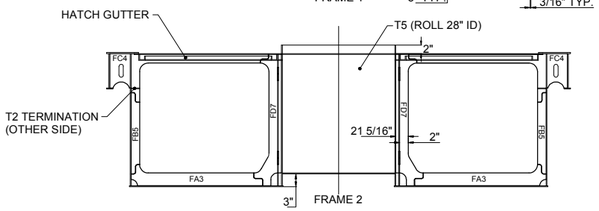

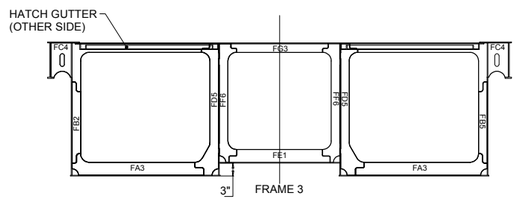

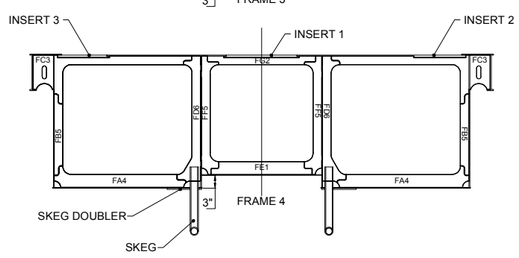

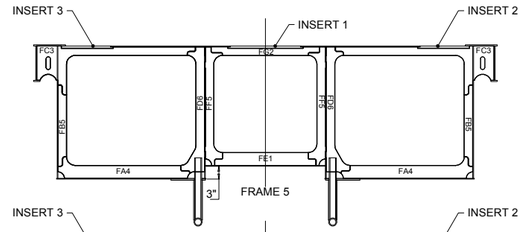

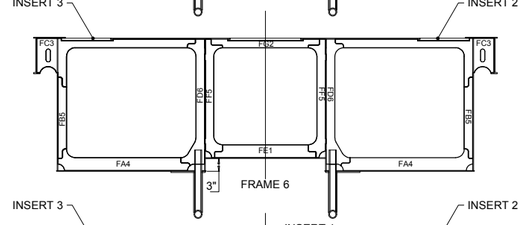

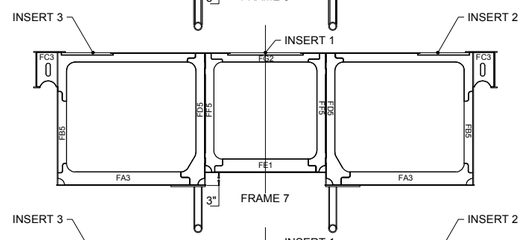

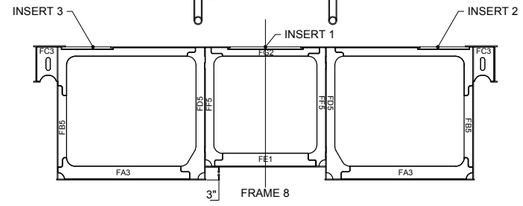

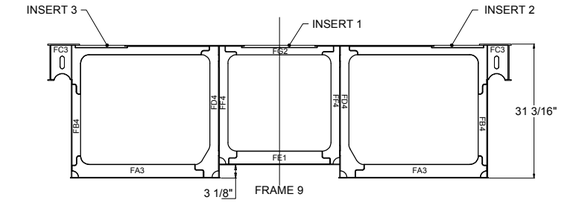

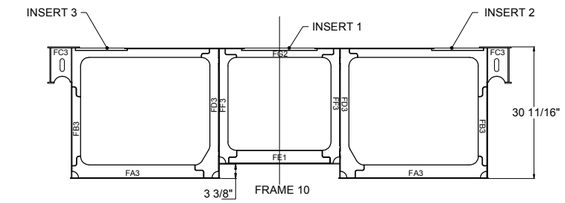

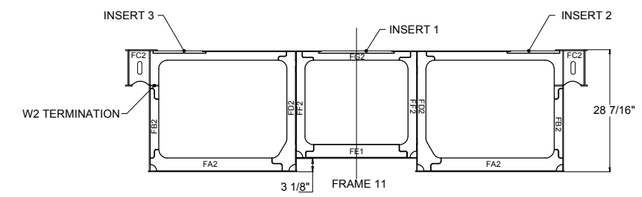

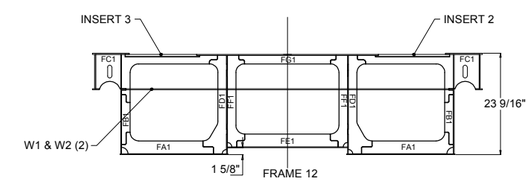

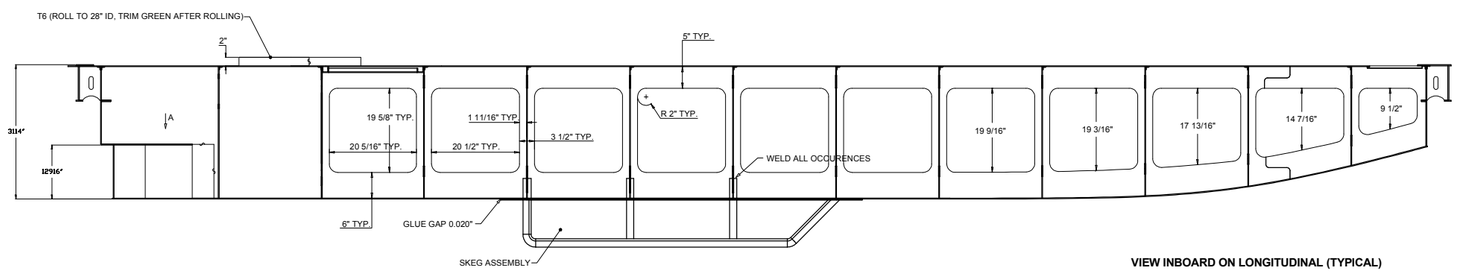

VIEW INBOARD ON LONGITUDINAL (TYPICAL)

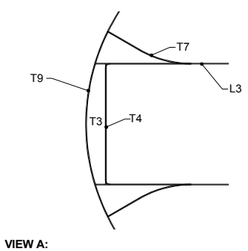

VIEW A:
ARRANGEMENT OF PLATING ABOUT T3

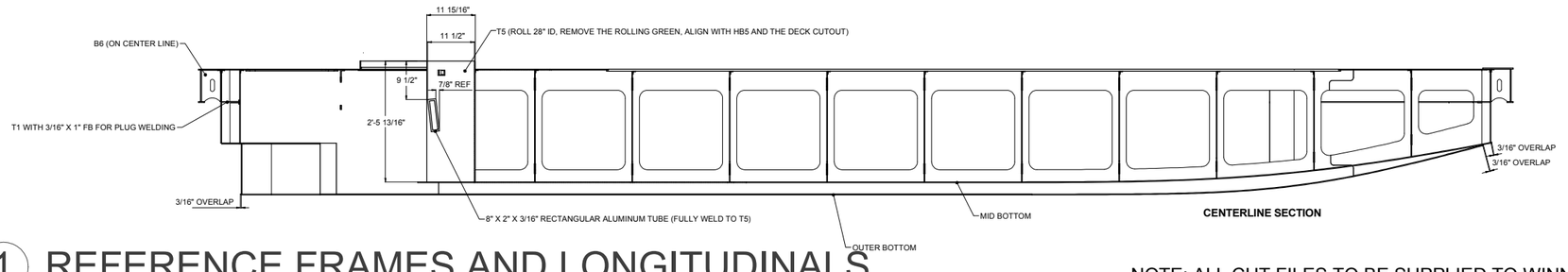

CENTERLINE SECTION

NOTES:

1. DIMENSIONS ARE ANNOTATED FROM FRAME 1 TO FRAME 12; DEVIATIONS FROM FRAME 1 ARE INDIVIDUALLY NOTED AT THE APPROPRIATE FRAME.

1 REFERENCE FRAMES AND LONGITUDINALS

NOTE: ALL CUT FILES TO BE SUPPLIED TO WINNING BIDDER
NOTE: MUST BE COMPLETED TO THE SATISFACTION OF METALAB STUDIO (SEE SPECS)

NO.	ISSUE	DATE
1	BID SET	2 August 2016

SAN ANTONIO RIVERBOATS
PROTOTYPE

SAR

SHEET SIZE: 12 X 18
SCALE AS NOTED

BID SET
NOT FOR CONSTRUCTION

REFERENCE FRAMES AND LONGITUDINALS

H-6

[METALAB ARCHITECTURE]
20 N Sampson St
Houston, Texas 77003
713.426.3640
www.metalabstudio.com
info@metalabstudio.com
ARCHITECT

Gregg Valentine, Design
Gregg Valentine, Inc.
NAVAL ARCHITECT
3005 Canal Drive,
New Orleans, La.
Louisiana 70130

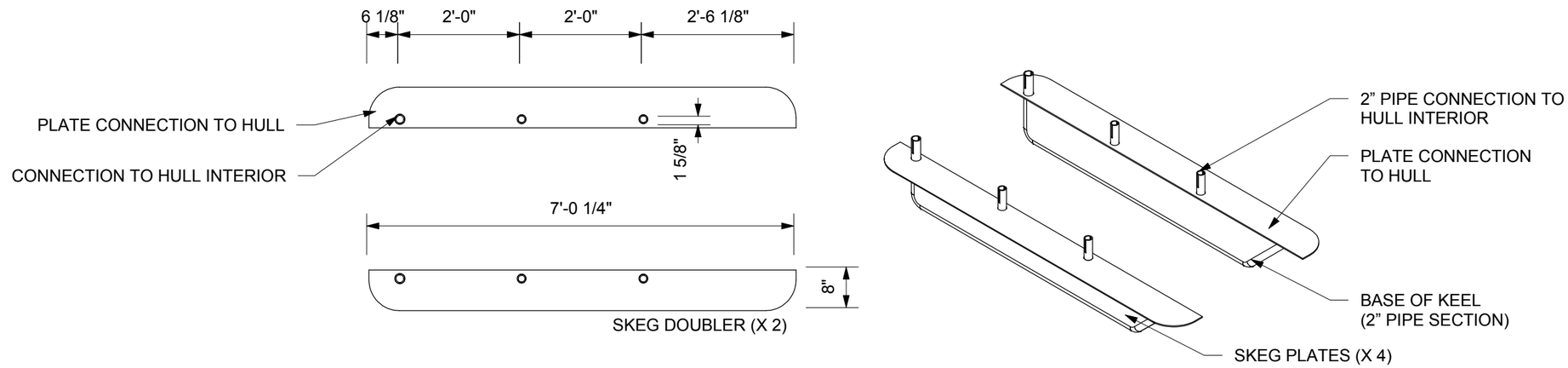

2 KEEL PLAN AND ASSEMBLY 1:24

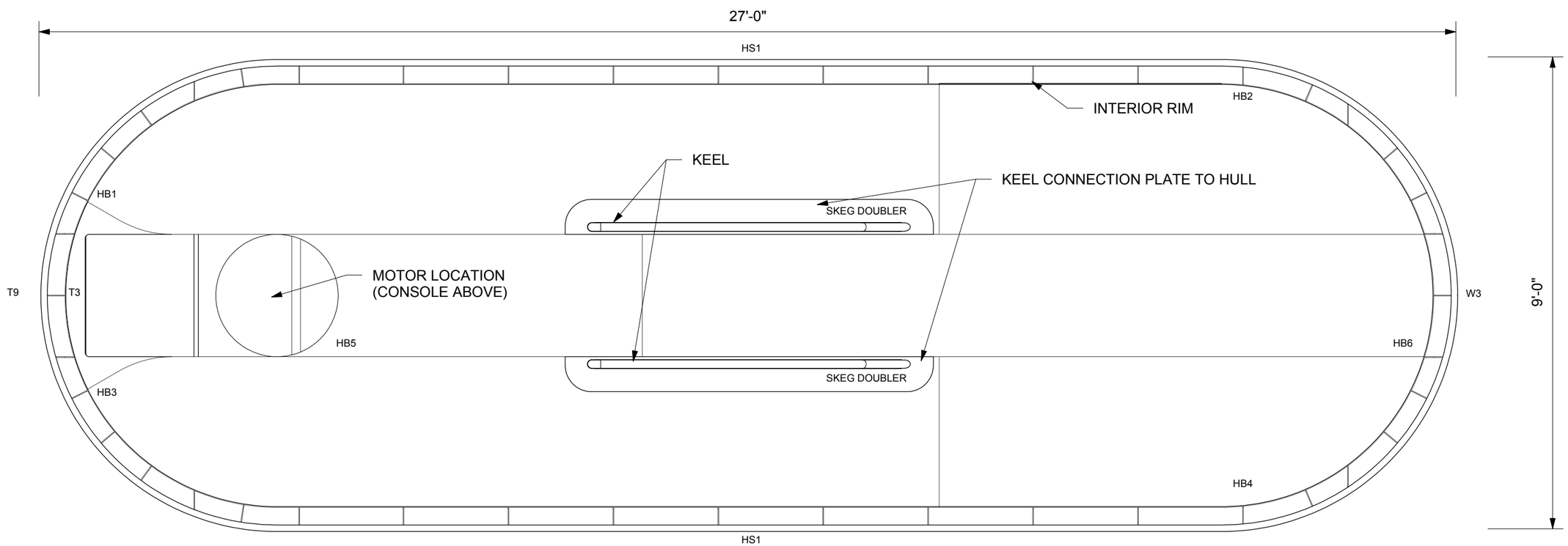

1 HULL BOTTOM VIEW PLAN 1:24

NOTE: ALL CUT FILES TO BE SUPPLIED TO WINNING BIDDER
NOTE: MUST BE COMPLETED TO THE satisfaction OF METALAB STUDIO (SEE SPECS)

NO.	ISSUE	DATE
1	BID SET	2 August 2016

SAN ANTONIO RIVERBOATS
PROTOTYPE

[METALAB ARCHITECTURE]
20 N Sampson St
Houston, Texas 77003
713.426.3640
www.metalabstudio.com
info@metalabstudio.com
ARCHITECT

Gregg Fabian Design
Naval Architecture
3005 Carol Drive,
Kenner, Louisiana 70062
NAVAL ARCHITECT

SAR

SHEET SIZE: 12 X 18
SCALE AS NOTED

BID SET
NOT FOR CONSTRUCTION

HULL BOTTOM VIEW PLAN; KEEL PLAN AND ASSEMBLY

H-7

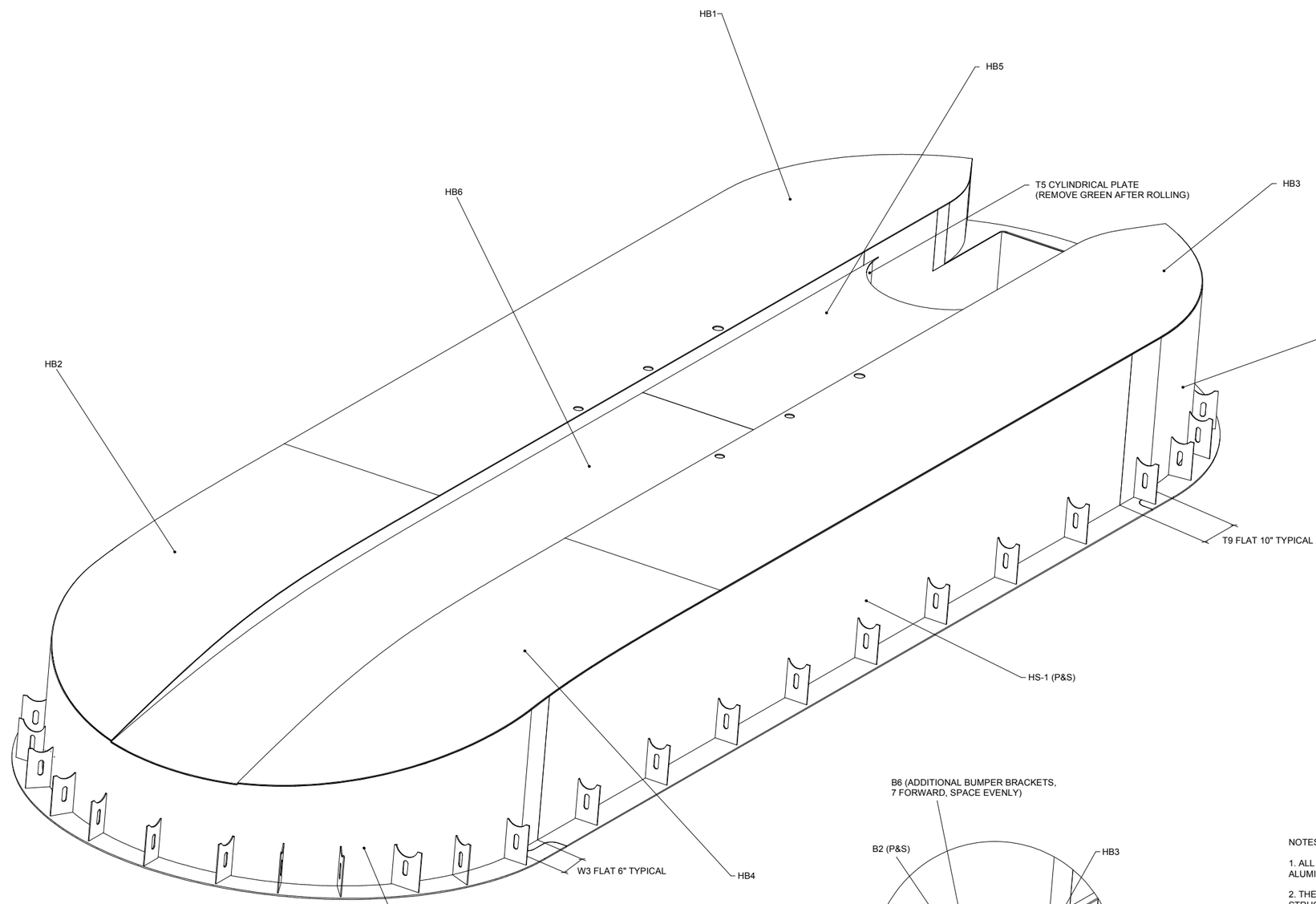

PLATE ARRANGEMENT
(BUMPER PLATES HIDDEN)

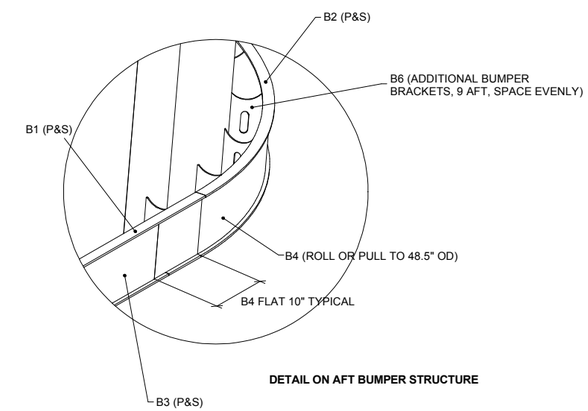

DETAIL ON AFT BUMPER STRUCTURE

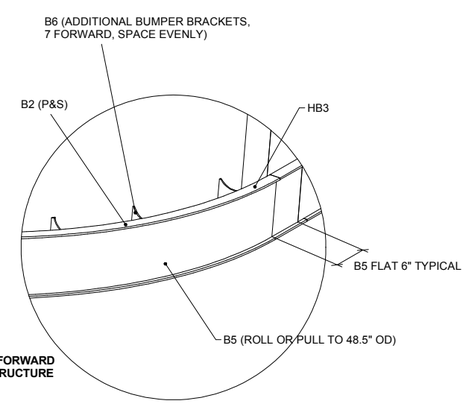

DETAIL ON FORWARD
BUMPER STRUCTURE

NOTES:

1. ALL HULL PLATING AND BUMPER BRACKETS ARE 3/16" ALUMINUM 5086 ALLOY; BUMPER STRUCTURE IS 1/4" ALUMINUM 5086 ALLOY.

2. THE HULL PLATES ARE FULLY WELDED OR FINISH WELDED ABOUT THE DECK CONNECTION AND THE INTERNAL STRUCTURE AND HULL PLATES WILL BE WELDED.

3. PORT AND STARBOARD PLATES ARE OPPOSITE.

4. ALIGN ALL PLATING FRAME MARKS TO INTERNAL STRUCTURE INTERNALLY TO THE HULL. THERE WILL BE NO MARK LINES ON THE HULL EXTERIOR. MARK LINES REFERENCE MOLDED LINES AND FORWARD OF FRAME 2, THE THROW IS AFT, FRAMES 1 AND 2 THE THROW IS FORWARD.

5. OVERLAPS ARE SHOWN ON H-6 REFERENCE FRAMES AND LONGITUDINALS.

6. THE BUMPER STRUCTURE MAY BE WELDED PRIOR TO WELDING THE INTERNAL STRUCTURE ABOVE.

7. BUMPER BRACKETS SHOULD BE PLACED EQUIDISTANT AROUND THE FORWARD AND AFT RADII OF THE DECK PERMETER (SEE H-10 AND DETAILS ON THIS SHEET)

1 PLATING DETAILS

NOTE: ALL CUT FILES TO BE SUPPLIED TO WINNING BIDDER
NOTE: MUST BE COMPLETED TO THE SATISFACTION OF METALAB STUDIO (SEE SPECS)

NO.	ISSUE	DATE
1	BID SET	2 August 2016

SAN ANTONIO RIVERBOATS
PROTOTYPE

[METALAB ARCHITECTURE]
20 N Sampson St
Houston, Texas 77003
713.426.3640
www.metalabstudio.com
info@metalabstudio.com
ARCHITECT

Gregg Fabian Design
Naval Architecture
3005 Canal Drive,
New Orleans, La
Louisiana 70130
NAVAL ARCHITECT

SAR

SHEET SIZE: 12 X 18
SCALE AS NOTED

BID SET
NOT FOR CONSTRUCTION

PLATING
DETAILS

H-8

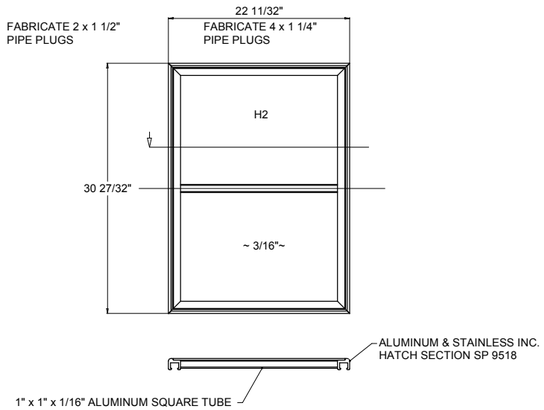

MAIN HATCH ASSEMBLY - QUANTITY 2

ALL PLATE AND SECTIONS ARE TO BE 5086 ALUMINUM ALLOY.

SOME ADJUSTMENT OF THE H2 PLATES MAY BE NECESSARY DUE
TO UNKNOWN DIMENSIONS ON THE A&S SECTION

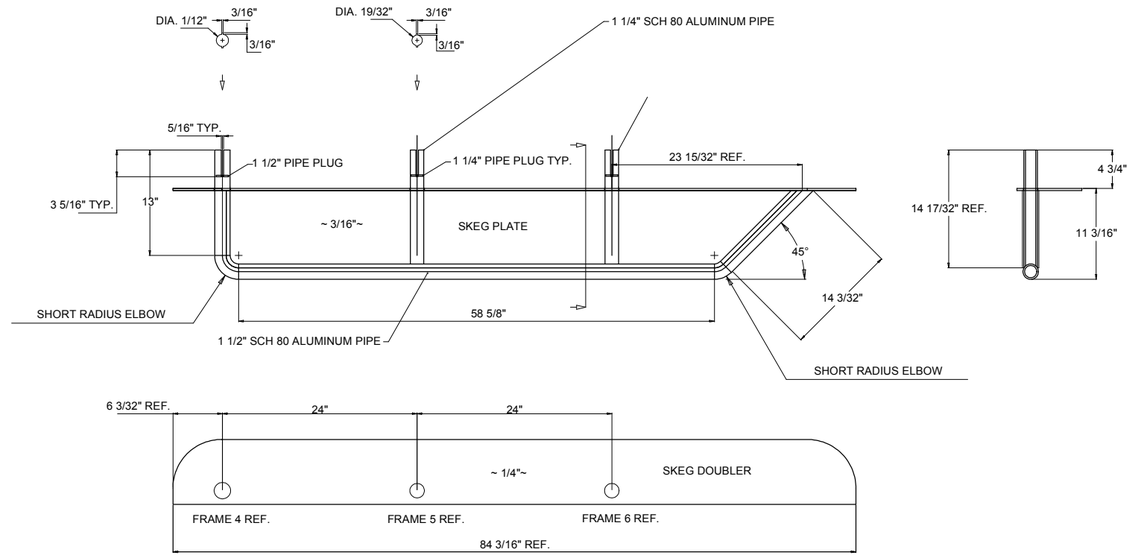

SKEG ASSEMBLY - QUANTITY 1 AS SHOWN, 1 OPPOSITE

ALL PLATE AND PIPE IS 5086 ALUMINUM ALLOY.

SKEG ASSEMBLIES ARE TO BE FULLY WELDED. ADD PLUG WELDS AS NEEDED TO SKEG PLATES.

THE SKEG DOUBLER WILL BE BONDED TO THE HULL BOTTOM AND TO FRAMES 4, 5 & 6.

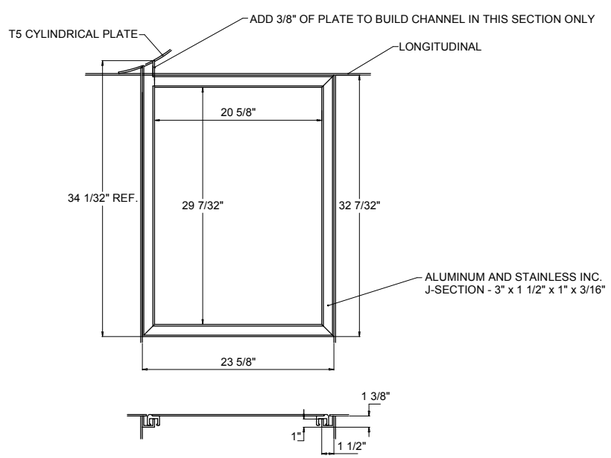

MAIN HATCH GUTTER ASSEMBLY - QUANTITY 1 AS SHOWN, 1 OPPOSITE

ALL PLATE AND SECTIONS ARE TO BE 5086 ALUMINUM ALLOY.

FULLY WELD THE GUTTERS AND MAIN STRUCTURE.

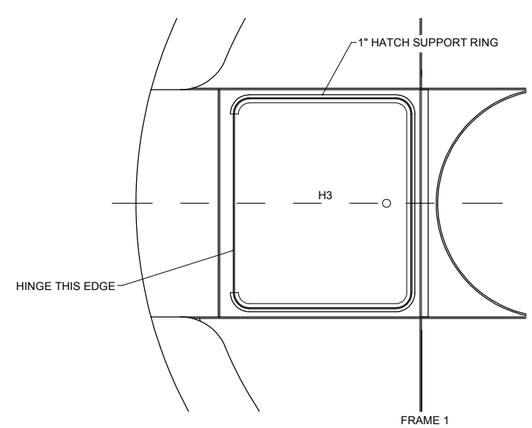

PROP INSPECTION HATCH - QUANTITY 1
VIEW ON DECK, DECK HIDDEN

ALL PLATE 3/16" 5086 ALUMINUM ALLOY.

BOND THE 1" HATCH SUPPORT RING TO THE UNDERSIDE OF THE DECK.

THE FREE EDGE WILL HINGE TO OPEN THE HATCH, THE PIANO HINGE OR SIMILAR
TO YARD STANDARD.

1" x 1" x 1/16" SQUARE TUBE MAY BE USED TO STIFFEN THE HATCH IF NECESSARY.

1 HATCH AND SKEG DETAILS

NOTE: ALL CUT FILES TO BE SUPPLIED TO WINNING BIDDER
NOTE: MUST BE COMPLETED TO THE SATISFACTION OF METALAB STUDIO (SEE SPECS)

NO.	ISSUE	DATE
1	BID SET	2 August 2016

SAN ANTONIO RIVERBOATS
PROTOTYPE

[METALAB ARCHITECTURE]
20 N Sampson St
Houston, Texas 77003
713.426.3640
www.metalabstudio.com
info@metalabstudio.com
ARCHITECT

Gunn Yates Design
Gunn Yates Design
3005 Canal Drive,
Suite 1, Corpus Christi,
Louisiana 78416
NAVAL ARCHITECT

SAR

BID SET
NOT FOR CONSTRUCTION

SHEET SIZE: 12 X 18
SCALE AS NOTED

HATCH AND
SKEG DETAILS

H-9

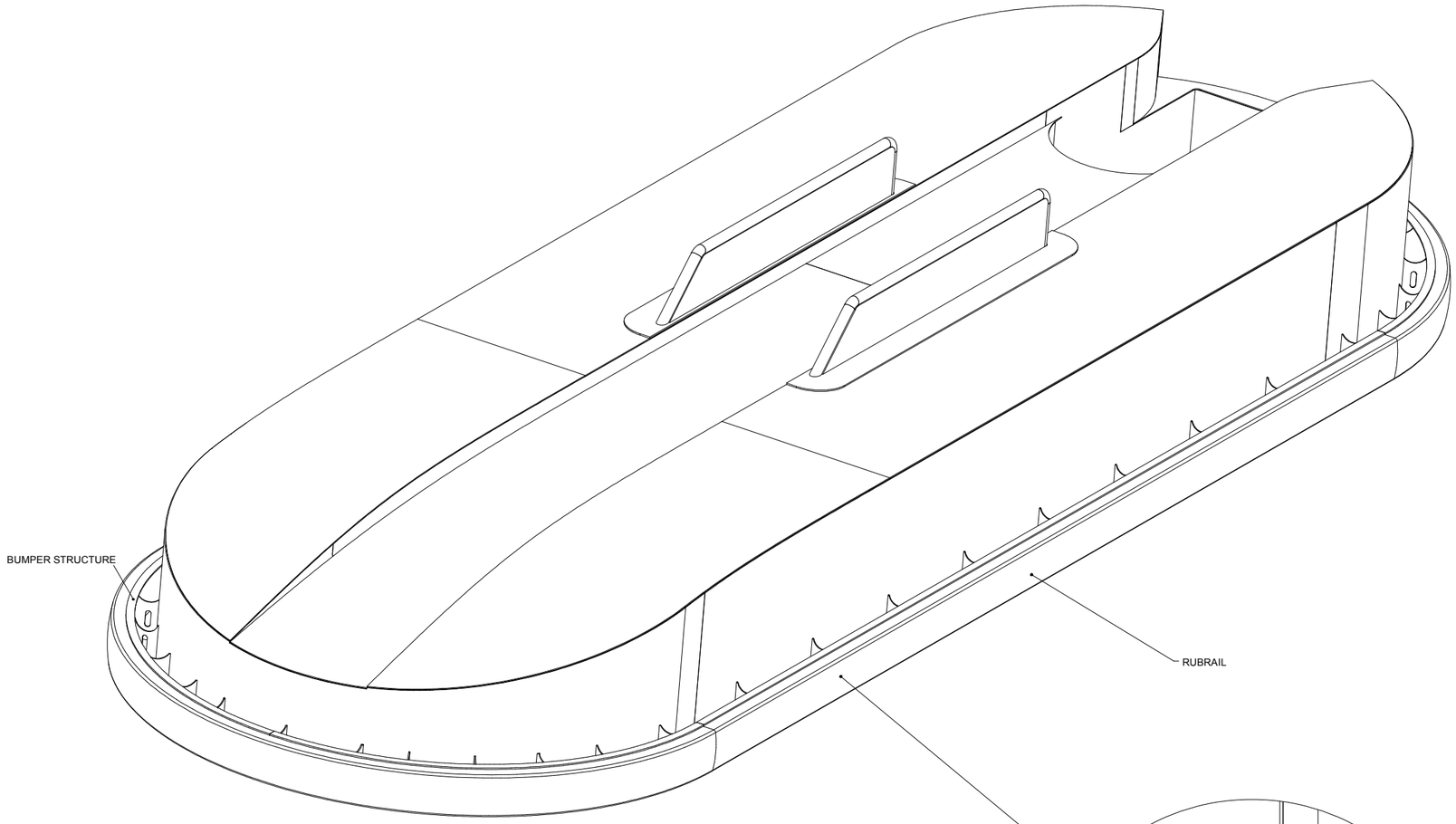

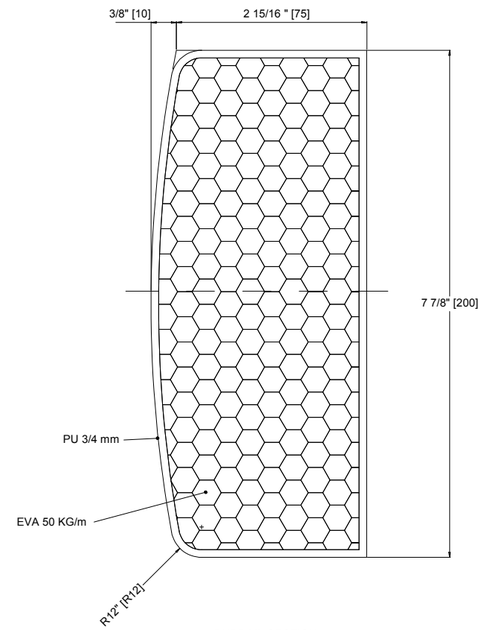

RUBRAIL SECTION

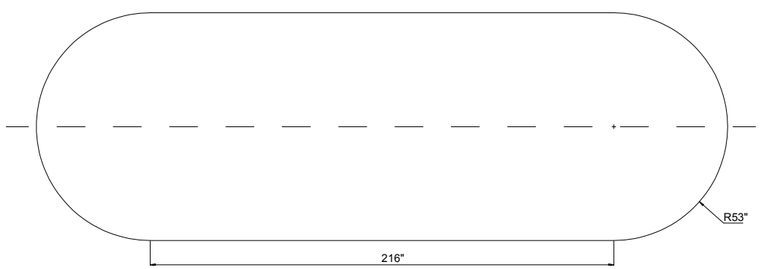

BUMPER STRUCTURE PERIMETER REFERENCE

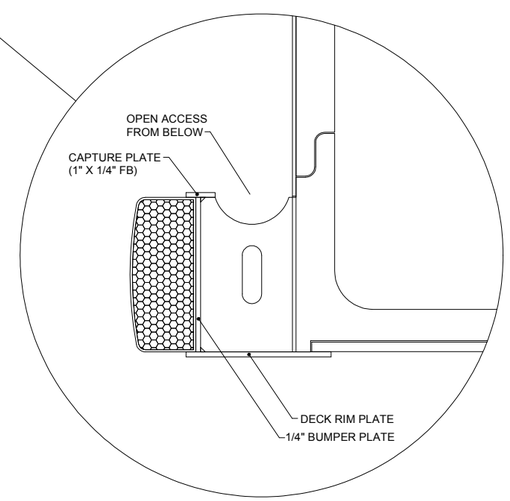

GENUINE MARINE
GM-HW-EF0051
8" "D" SHAPED FENDER

INSTALL PER MANUFACTURING
INSTRUCTIONS

1 RUBRAIL

NOTE: ALL CUT FILES TO BE SUPPLIED TO WINNING BIDDER
NOTE: MUST BE COMPLETED TO THE SATISFACTION OF METALAB STUDIO (SEE SPECS)

NO.	ISSUE	DATE
1	BID SET	2 August 2016

SAN ANTONIO RIVERBOATS
PROTOTYPE

[METALAB ARCHITECTURE]
20 N Sampson St
Houston, Texas 77003
713.426.3640
www.metalabstudio.com
info@metalabstudio.com
ARCHITECT

Gonzo Yates Design
Naval Architecture
3005 Canal Drive,
Port Aransas, Tx
Louisiana 70130
NAVAL ARCHITECT

SAR

SHEET SIZE: 12 X 18
SCALE AS NOTED

BID SET
NOT FOR CONSTRUCTION

RUBRAIL

H-10

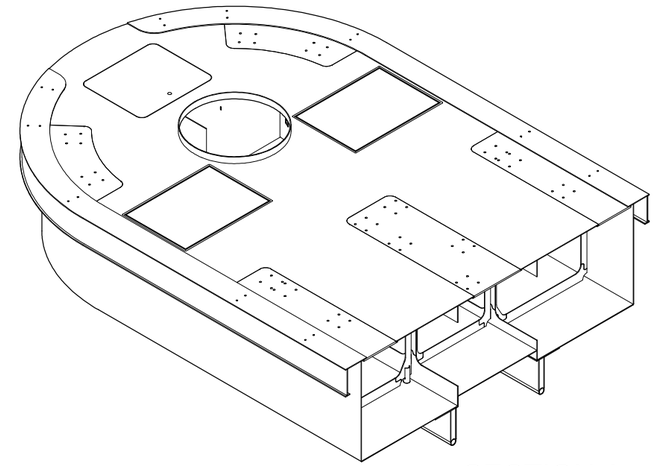

SECTION A

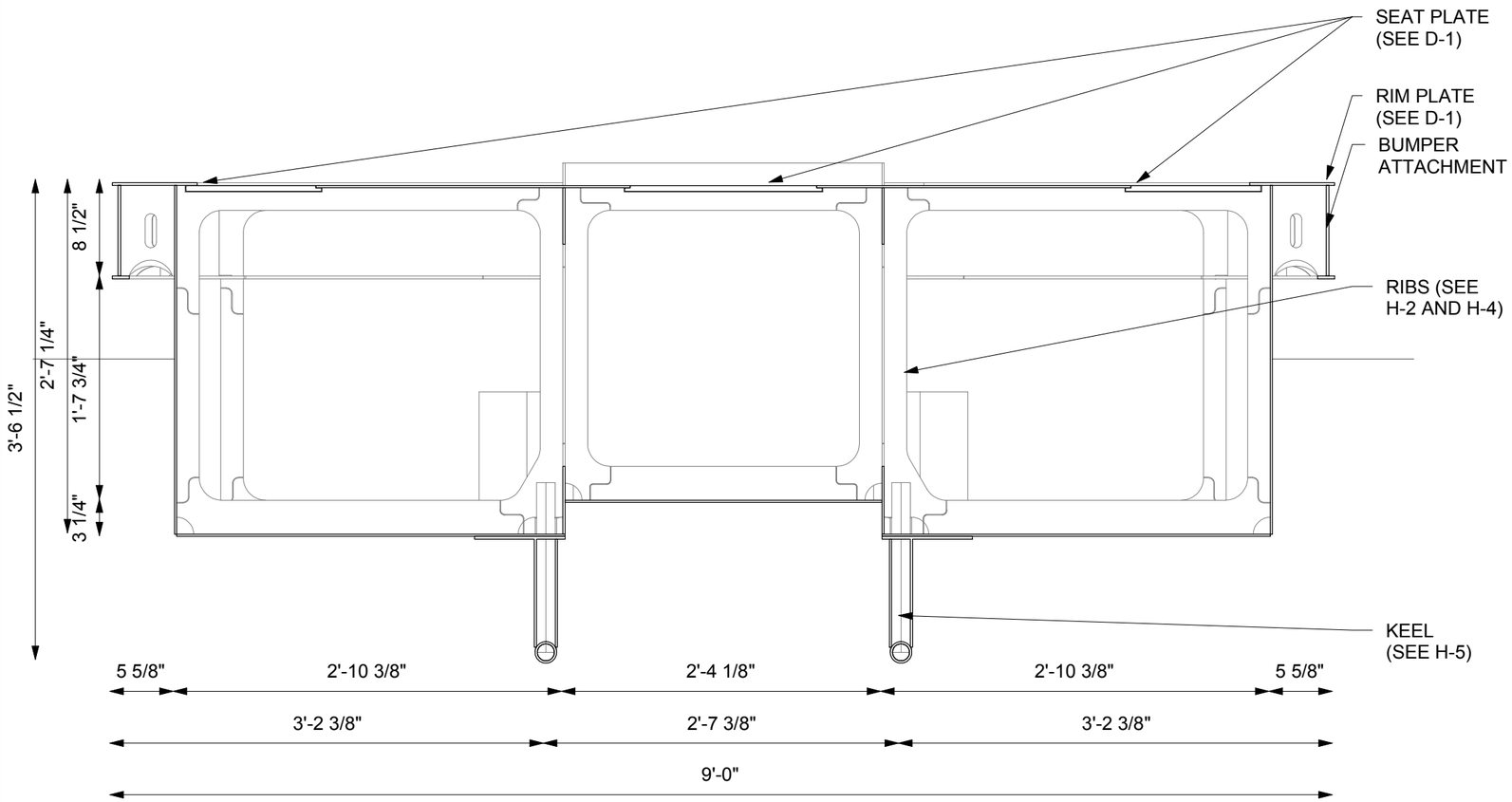

NOTE: ALL CUT FILES TO BE SUPPLIED TO WINNING BIDDER
NOTE: MUST BE COMPLETED TO THE SATISFACTION OF METALAB STUDIO (SEE SPECS)

1 HULL SECTION A 1:12

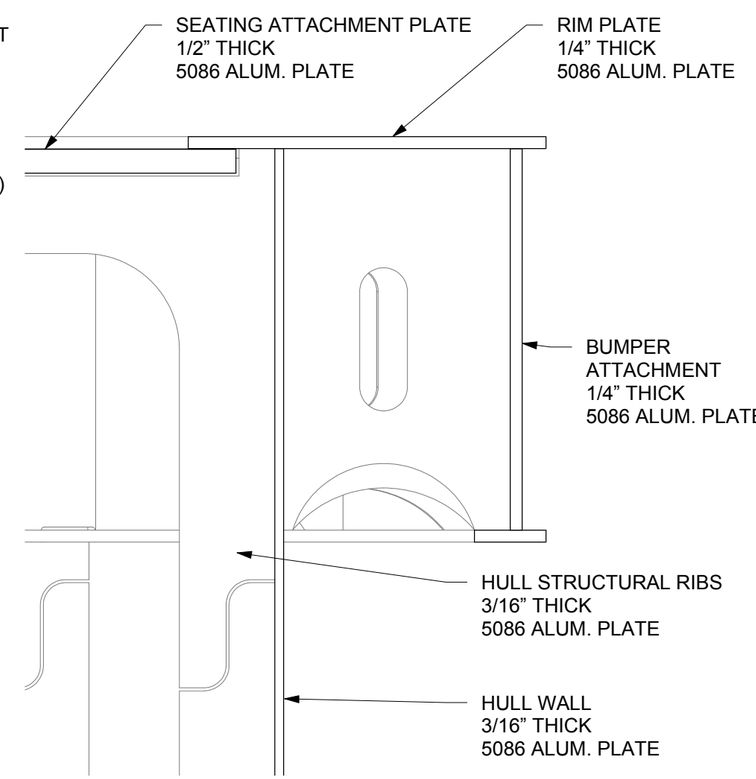

2 HULL SECTION DETAIL 1:12

NO.	ISSUE	DATE
1	BID SET	2 August 2016

SAN ANTONIO RIVERBOATS
PROTOTYPE

[METALAB ARCHITECTURE]
20 N Sampson St
Houston, Texas 77003
713.426.3640
www.metalabstudio.com
info@metalabstudio.com
ARCHITECT

Gregg Fabas Design
Naval Architecture
3005 Canal Drive,
Metairie, Louisiana
Louisiana 70130
NAVAL ARCHITECT

SAR

SHEET SIZE: 12 X 18
SCALE AS NOTED

BID SET
NOT FOR CONSTRUCTION

HULL SECTION A

H-11

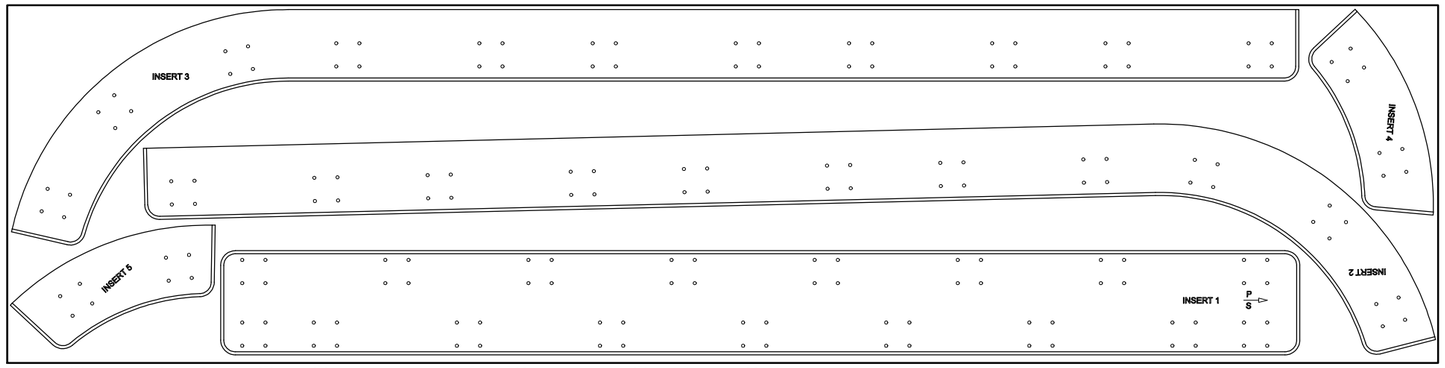

NESTED PIECES HULL (1/2" THICK) 1:24

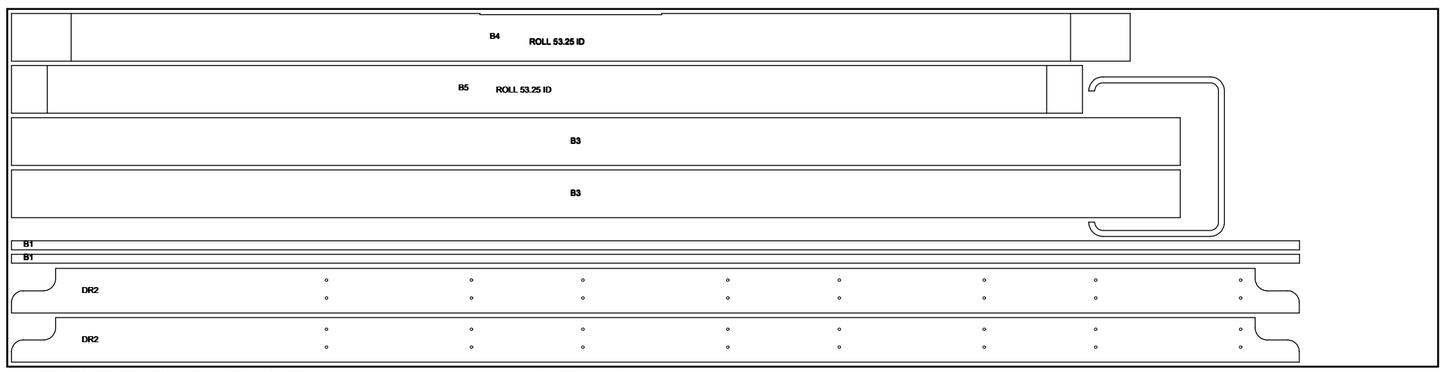

NESTED PIECES HULL (1/4" THICK) 1:24

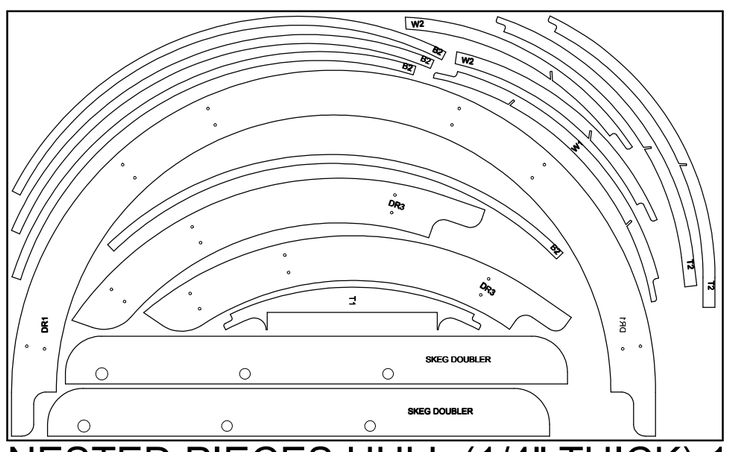

NESTED PIECES HULL (1/4" THICK) 1:24

1 NESTING SHEETS 1:24

NOTE: ALL CUT FILES TO BE SUPPLIED TO WINNING BIDDER
NOTE: MUST BE COMPLETED TO THE SATISFACTION OF METALAB STUDIO (SEE SPECS)

NO.	ISSUE	DATE
1	BID SET	2 August 2016

SAN ANTONIO RIVERBOATS
PROTOTYPE

[METALAB ARCHITECTURE]
20 N Sampson St
Houston, Texas 77003
713.426.3640
www.metalabstudio.com
info@metalabstudio.com
ARCHITECT

Gregory Parker Design
Naval Architecture
3005 Canal Drive,
New Orleans, La.
Louisiana 70118
NAVAL ARCHITECT

SAR

SHEET SIZE: 12 X 18
SCALE AS NOTED

BID SET
NOT FOR CONSTRUCTION

NESTING
SHEETS 1

H-12

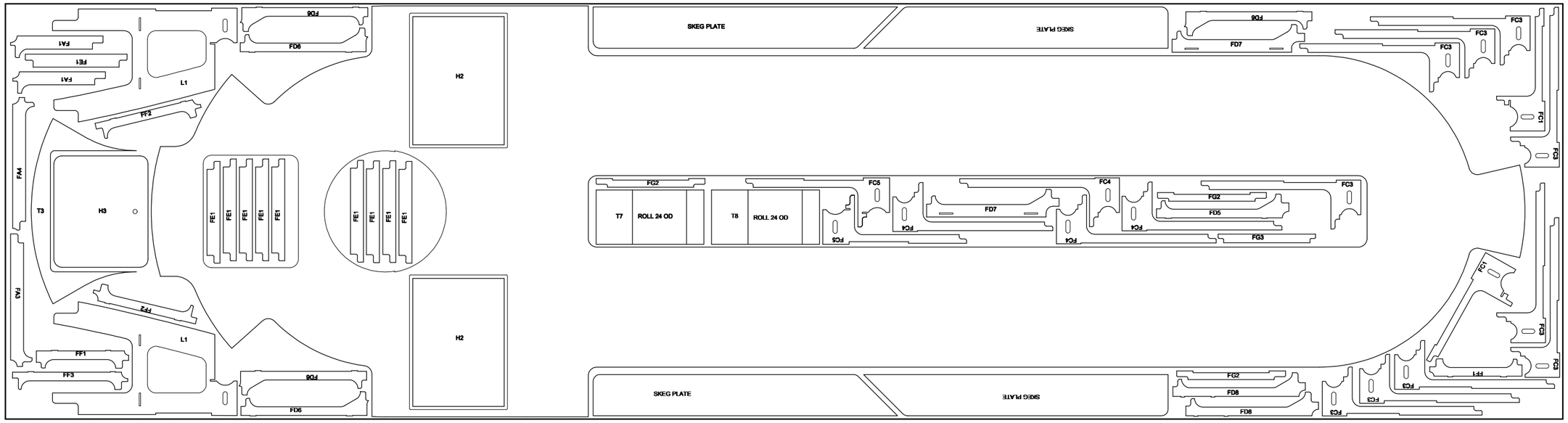

NESTED PIECES HULL (3/16" THICK) 1:24

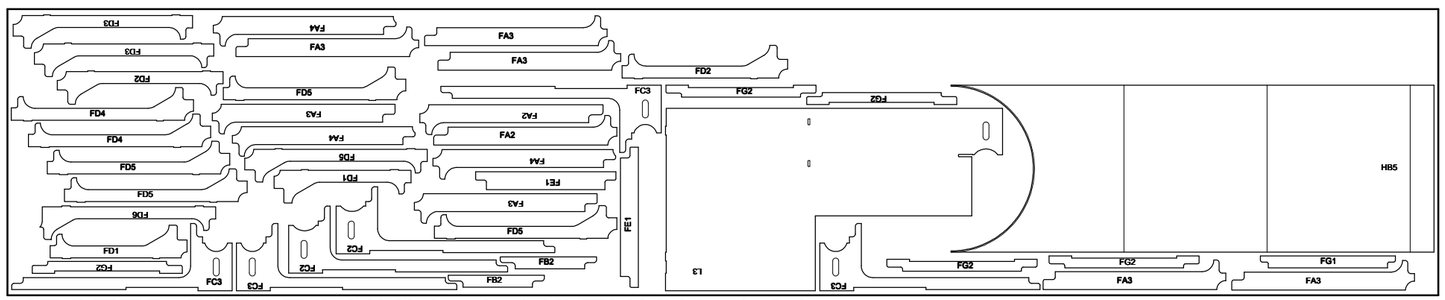

NESTED PIECES HULL (3/16" THICK) 1:24

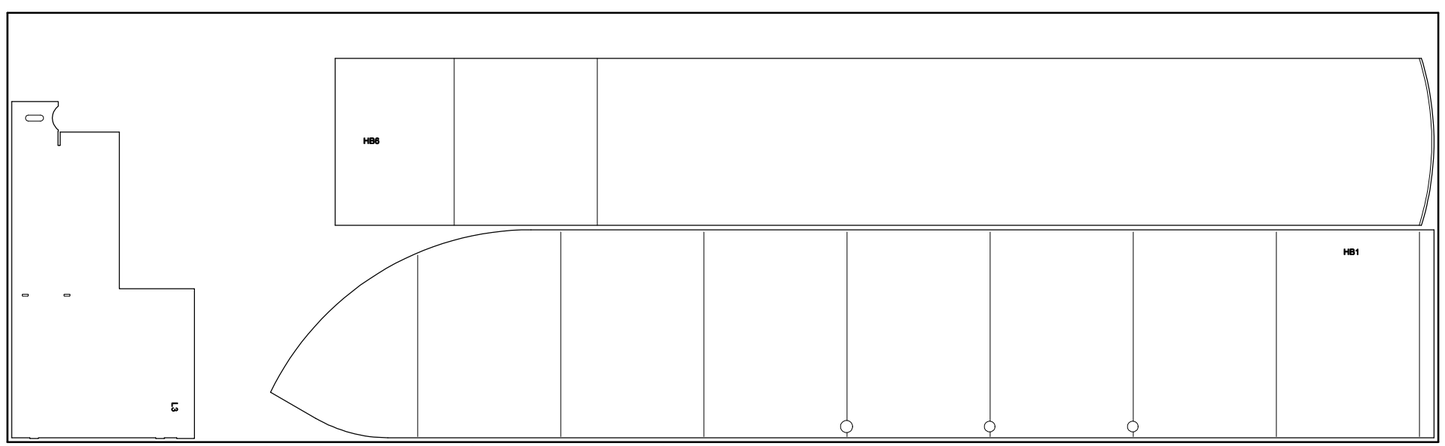

NESTED PIECES HULL (3/16" THICK) 1:24

1 NESTING SHEETS 1:24

NOTE: ALL CUT FILES TO BE SUPPLIED TO WINNING BIDDER
NOTE: MUST BE COMPLETED TO THE SATISFACTION OF METALAB STUDIO (SEE SPECS)

NO.	ISSUE	DATE
1	BID SET	2 August 2016

SAN ANTONIO RIVERBOATS
PROTOTYPE

[METALAB ARCHITECTURE]
20 N Sampson St
Houston, Texas 77003
713.426.3640
www.metalabstudio.com
info@metalabstudio.com
ARCHITECT

Gregg Adams Design
Naval Architecture
3005 Carol Drive,
Kenner, Louisiana
Louisiana 70062
NAVAL ARCHITECT

SAR

SHEET SIZE: 12 X 18
SCALE AS NOTED

BID SET
NOT FOR CONSTRUCTION

NESTING
SHEETS 2

H-13

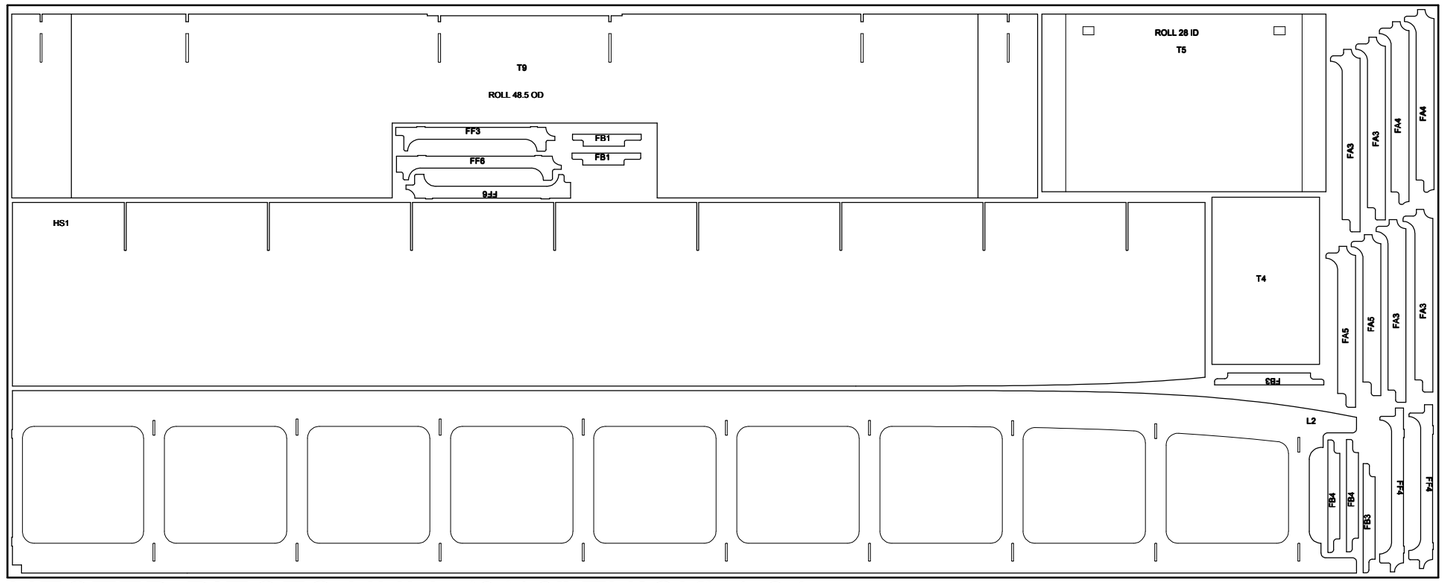

NESTED PIECES HULL (3/16" THICK) 1:24

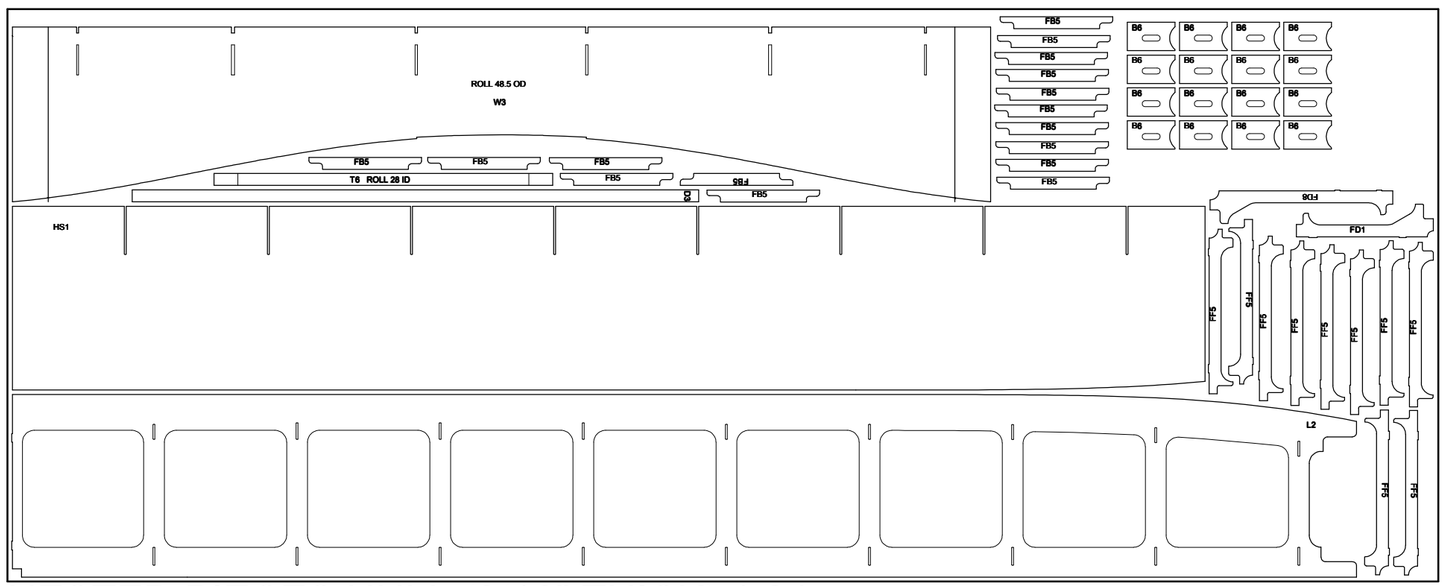

NESTED PIECES HULL (3/16" THICK) 1:24

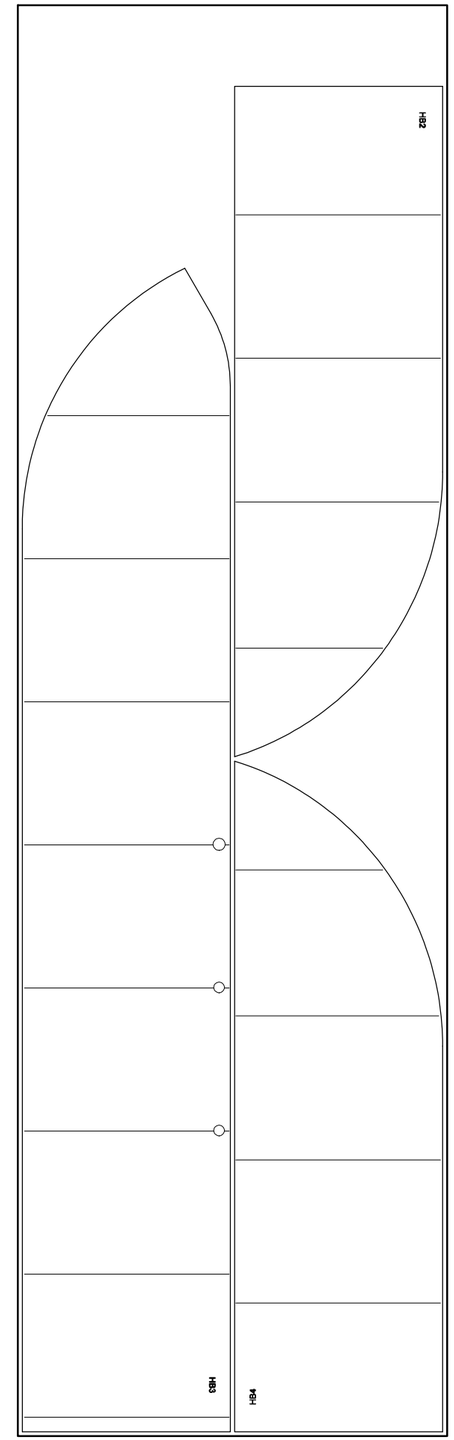

NESTED PIECES HULL (3/16" THICK) 1:24

1 NESTING SHEETS 1:24

NOTE: ALL CUT FILES TO BE SUPPLIED TO WINNING BIDDER
NOTE: MUST BE COMPLETED TO THE SATISFACTION OF METALAB STUDIO (SEE SPECS)

NO.	ISSUE	DATE
1	BID SET	2 August 2016

SAN ANTONIO RIVERBOATS
PROTOTYPE

[METALAB ARCHITECTURE]
20 N Sampson St
Houston, Texas 77003
713.426.3640
www.metalabstudio.com
info@metalabstudio.com
ARCHITECT

Gregg Fisher, Design
Gary Nelson, Design
3005 Carol Drive,
Kenner, Louisiana 70062
(504)468-7030
NAVAL ARCHITECT

SAR

SHEET SIZE: 12 X 18
SCALE AS NOTED

BID SET
NOT FOR CONSTRUCTION

NESTING SHEETS 3

H-14

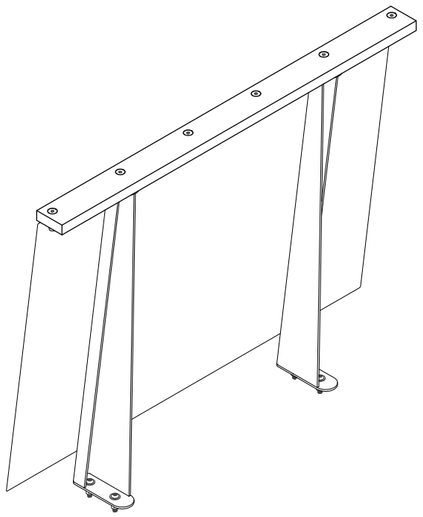

STRAIGHT RAIL X 8 (SEE R-6)
S-SERIES

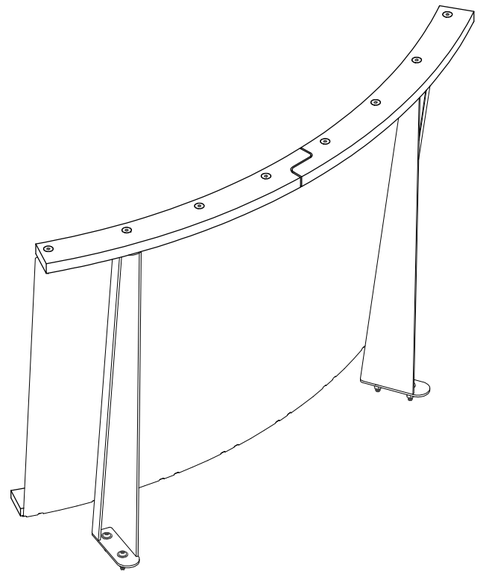

CURVED RAIL X 4 (SEE R-7)
C-SERIES

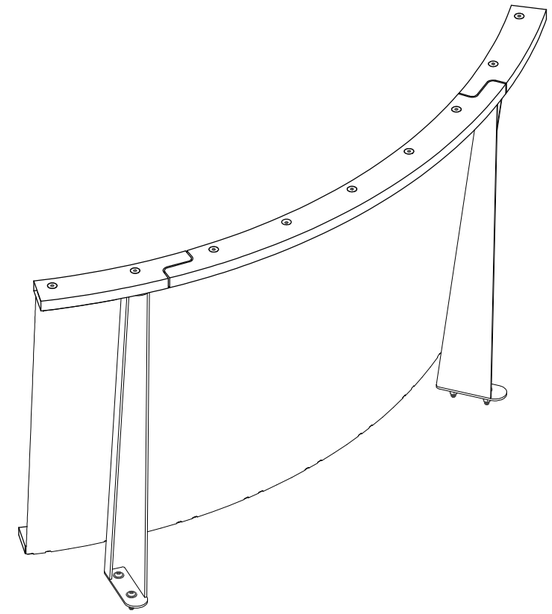

LONG CURVE DOOR RAIL X 2 (SEE R-8)
L-SERIES

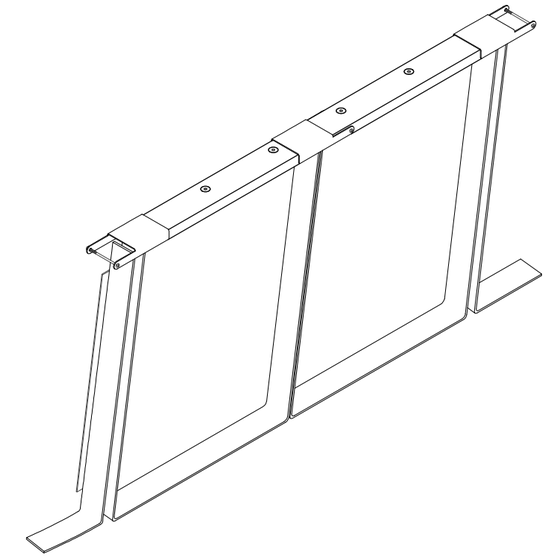

DOOR RAIL X 4 (SEE R-9)
D-SERIES

2 RAIL SCHEDULE

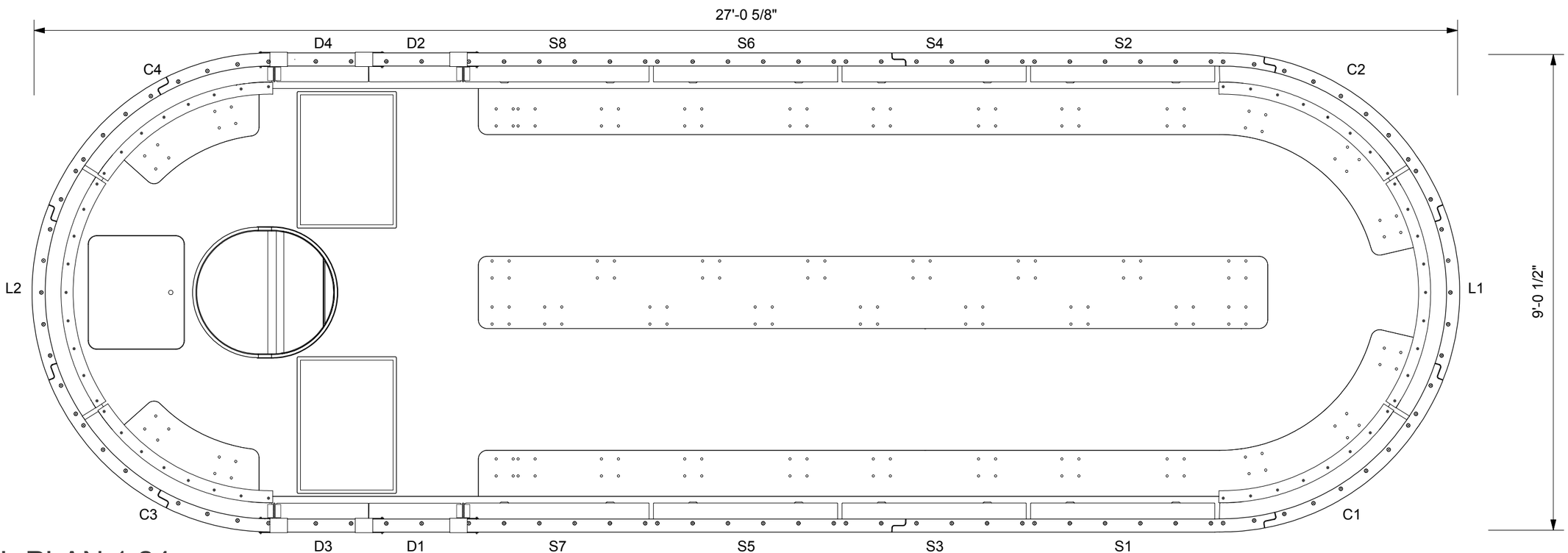

1 RAIL PLAN 1:24

NOTE: MUST BE COMPLETED TO THE SATISFACTION OF METALAB STUDIO (SEE SPECS)

NO.	ISSUE	DATE
1	BID SET	2 August 2016

SAN ANTONIO RIVERBOATS
PROTOTYPE

[METALAB ARCHITECTURE]
20 N Sampson St
Houston, Texas 77003
713.426.3640
www.metalabstudio.com
info@metalabstudio.com
ARCHITECT

Gresham Smith and Partners, Texas Inc.
3000 Carol Drive,
Kenner, Louisiana 70062
NAVAL ARCHITECT

SAR

SHEET SIZE: 12 X 18
SCALE AS NOTED

BID SET
NOT FOR CONSTRUCTION

RAIL PLAN AND
RAIL SCHEDULE

R-1

RAIL HARDWARE SCHEDULE

DRAWING	DESCRIPTION	# PER STRAIGHT PANEL	# PER CURVE PANEL	# PER LONG PANEL	# PER DOOR PANEL	TOTAL
	18-8 Stainless Steel Button Head Socket Cap Screw 3/8”-16 Thread 1 ½” long 92949A628	4	4	4	0	56
	18-8 Stainless Steel Split Lock Washer 3/8” Screw; 0.680” approx. OD 92146A031	80	46	26	12	166
	18-8 Stainless Steel Flat Washer 3/8” Screw; 0.875” approx. OD 92141A031	14	16	17	3	222
	18-8 Stainless Steel Nylon-Insert Nonmarring Flange Locknut 3/8”-16 Thread 91831A127	80	46	26	12	166
	18-8 Stainless Steel Flat Head Socket Cap Screw 3/8”-16 Thread 1 7/8” long 92210A631	6	8	9	3	110
	18-8 Stainless Steel Nylon-Insert Nonmarring Flange Locknut ¼”-20 Thread 91831A029	0	8	9	0	50
	18-8 Stainless Steel Flanged Button Head Socket Cap Screw ¼”-20 Thread, 1 1/2” Long 97654A355	0	8	9	0	50

NOTE: USE IRONTITE OR EQUAL ON ALL STAINLESS FASTENERS TO PREVENT SEIZING AND GALLING

DOOR HARDWARE SCHEDULE

DRAWING	DESCRIPTION	# PER DOOR PAIR	TOTAL
	18-8 Stainless Steel Spacer OD ¼” for #8 Screw 5/32” Long 92320A032	6	12
	18-8 Stainless Steel Nylon-Insert Nonmarring Flange Locknut #8-32 Thread 91831A009	3	6
	18-8 Stainless Steel Button Head Cap Screw #8-32 Thread 4” Long 91772A217	3	6

ITEMS FOR DOOR ASSEMBLY

FOR MORE INFORMATION SEE R-8

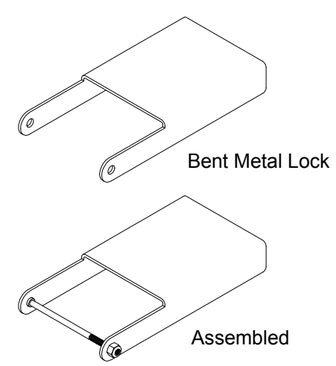

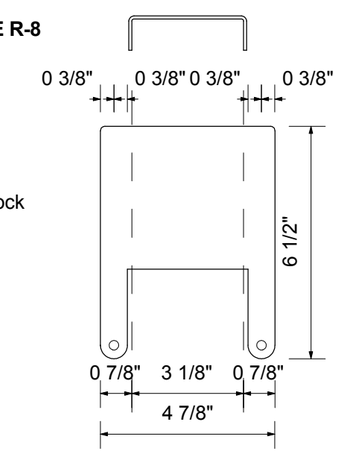

ITEM: Door Latch Mechanism (to lock door)
MATERIAL: 12 Gauge Aluminum 5052, Unfinished
AMT: 3 per Door Pair (6 total)
See Cut Sheet and Bending Pattern (Right)
Provide 0.25 radius rounded corner on flush end

ITEM: Aluminum Piano Hinge
for swinging door
DESCRIPTION: Aluminum 5052
.090" Thick; 3" Width, 2' Length
AMT: 2 per Door Pair (4 total)

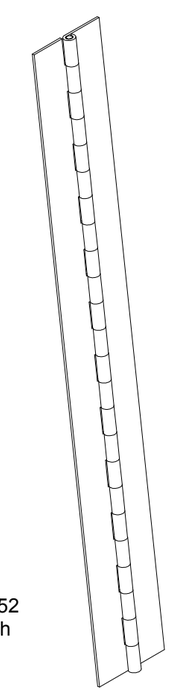

1 RAIL HARDWARE SCHEDULE

2 DOOR DETAILS AND HARDWARE SCHEDULE

NO.	ISSUE	DATE
1	BID SET	2 August 2016

SAN ANTONIO RIVERBOATS
PROTOTYPE

[METALAB ARCHITECTURE]
20 N Sampson St
Houston, Texas 77003
713.426.3640
www.metalabstudio.com
info@metalabstudio.com
ARCHITECT

Gensler Marine Design
Gensler Marine Design
3000 Gulen Drive,
Gulen Gulen Drive
Louisiana 70130
NAVAL ARCHITECT

SAR

BID SET
NOT FOR CONSTRUCTION

SHEET SIZE: 12 X 18
SCALE AS NOTED

RAIL HARDWARE SCHEDULE AND DOOR DETAILS AND HARDWARE SCHEDULE

R-2

3/16" ALUMINUM 5052
PAINT FINISH ONCE
ASSEMBLED
(SEE COLOR INDEX)
TOTAL 28 STANCHIONS
PER BOAT

14 LEFT, 14 RIGHT
2 PER PANEL EXCEPT
DOOR PANEL

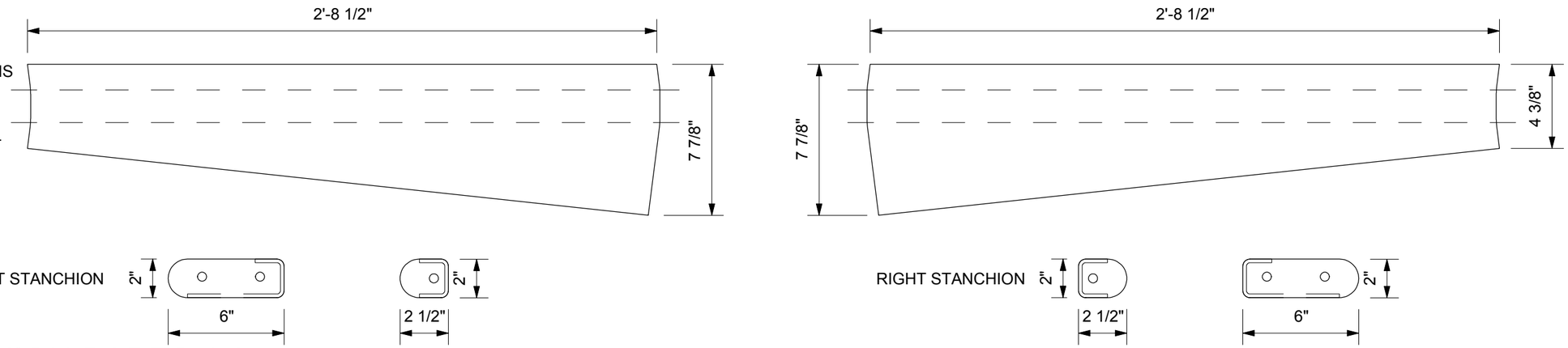

2 STANCHION PARTS 1:6

SEE R-4 FOR MORE
INFORMATION

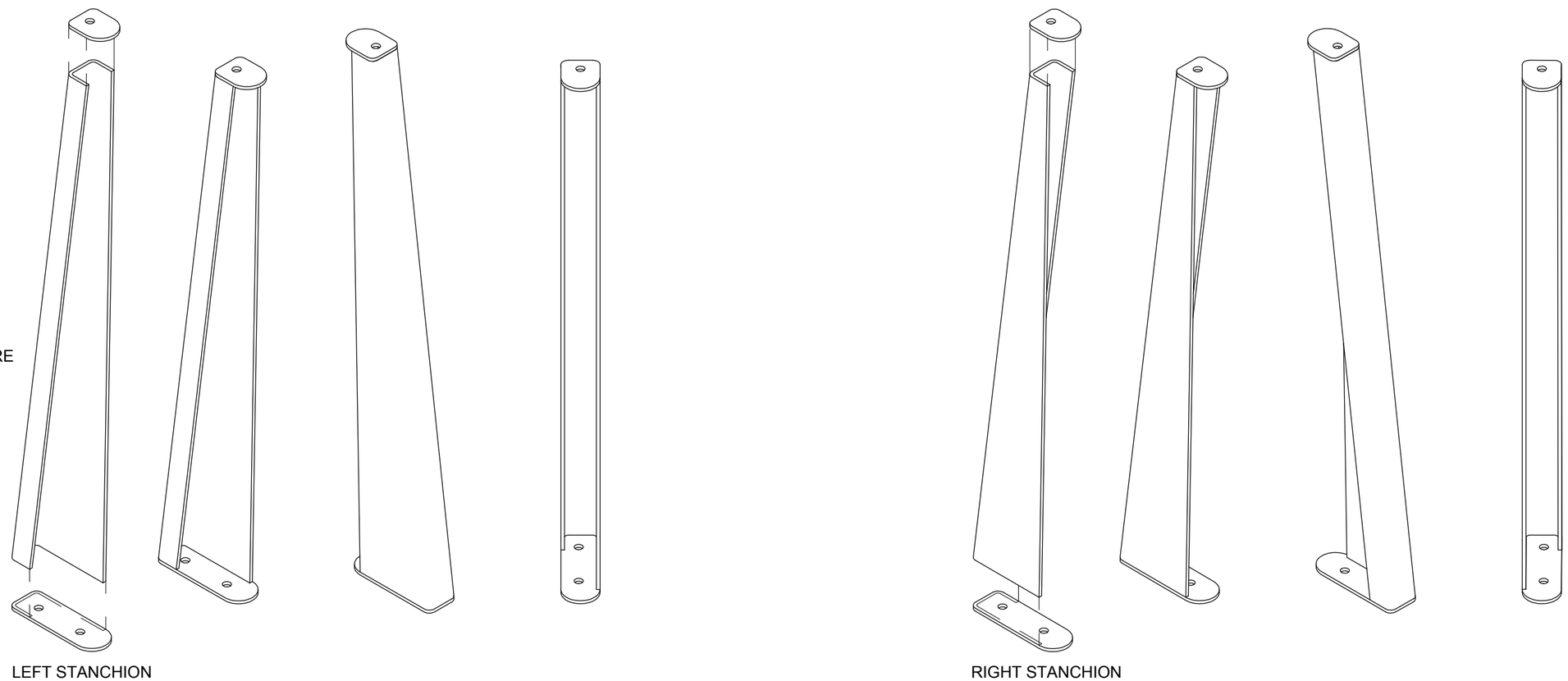

1 RAIL STANCHION ASSEMBLY (FOR S, C, L-SERIES) 1:6

NOTE: ALL CUT FILES TO BE SUPPLIED TO WINNING BIDDER
NOTE: MUST BE COMPLETED TO THE SATISFACTION OF METALAB STUDIO (SEE SPECS)

NO.	ISSUE	DATE
1	BID SET	2 August 2016

SAN ANTONIO RIVERBOATS
PROTOTYPE

[METALAB ARCHITECTURE]
20 N Sampson St
Houston, Texas 77003
713.426.3640
www.metalabstudio.com
info@metalabstudio.com
ARCHITECT

George Nelson Design
Office Nelson, Inc.
300E Canal Drive,
Lake Charles, Louisiana 70616
NAVAL ARCHITECT

SAR

BID SET
NOT FOR CONSTRUCTION

SHEET SIZE: 12 X 18
SCALE AS NOTED

RAIL STANCHION
ASSEMBLY
DRAWINGS

R-3

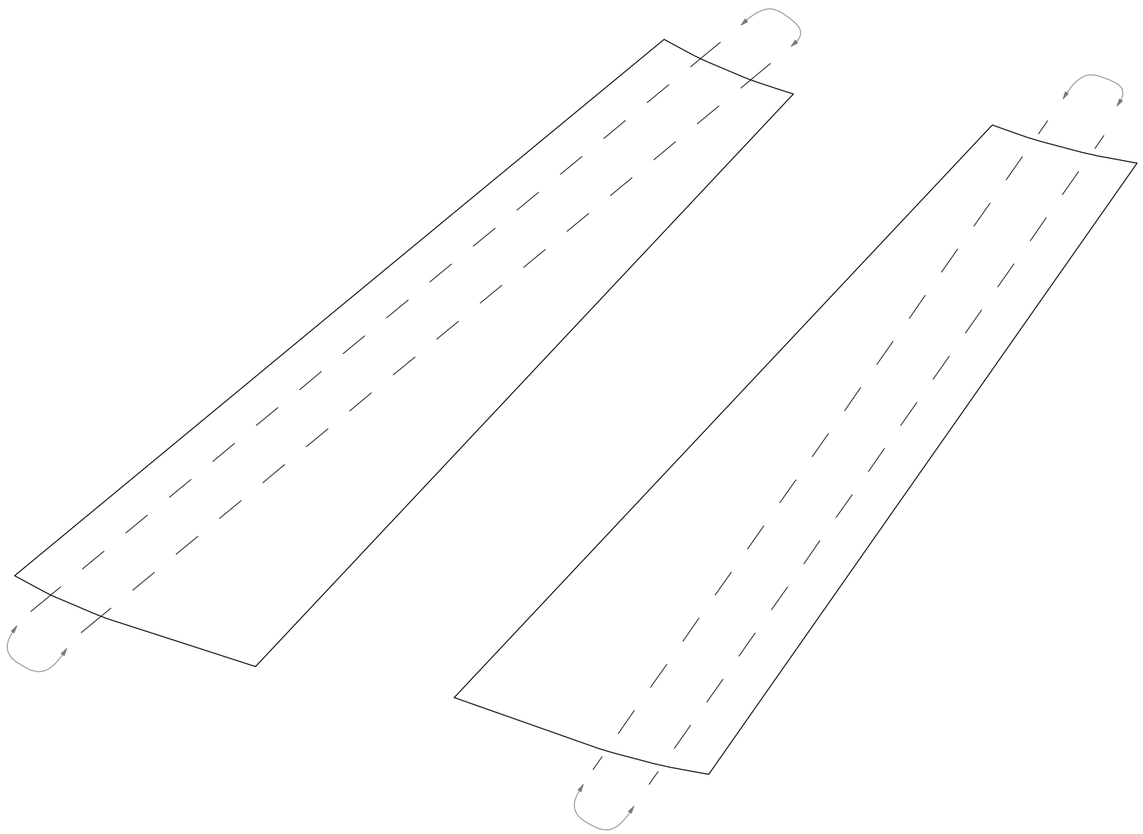

3/16" ALUMINUM 5052 TOTAL 28 STANCHIONS PER BOAT

PAINT FINISH ONCE ASSEMBLED TO RAIL PANELS (SEE COLOR INDEX)

14 LEFT, 14 RIGHT 2 PER PANEL EXCEPT DOOR PANEL

SEE R-3 FOR MORE INFORMATION

NOTE: ALL CUT FILES TO BE SUPPLIED TO WINNING BIDDER
NOTE: MUST BE COMPLETED TO THE SATISFACTION OF METALAB STUDIO (SEE SPECS)

1 BENDING DETAIL FOR STANCHION

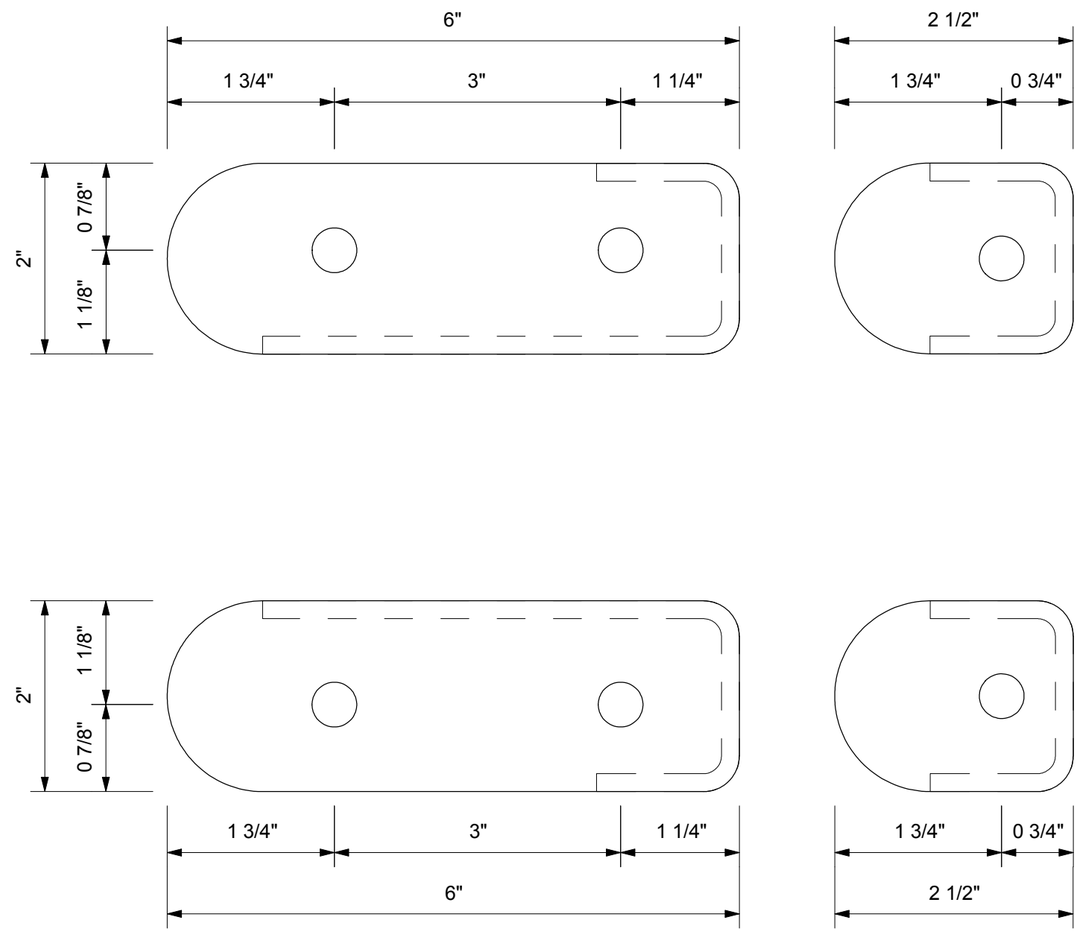

NOTE: ALL CUT FILES TO BE SUPPLIED TO WINNING BIDDER
NOTE: MUST BE COMPLETED TO THE SATISFACTION OF METALAB STUDIO (SEE SPECS)

2 STANCHION BASE AND TOP DETAILS 1:1.5

NO.	ISSUE	DATE
1	BID SET	2 August 2016

SAN ANTONIO RIVERBOATS
PROTOTYPE

[METALAB ARCHITECTURE]
20 N Sampson St
Houston, Texas 77003
713.426.3640
www.metalabstudio.com
info@metalabstudio.com
ARCHITECT

Gensler Texas, Design Architects, LLP
3005 Cleburne St.
Houston, Texas 77004
(713)529-7070
NAVAL ARCHITECT

SAR

SCALE AS NOTED

SHEET SIZE: 12 X 18

BID SET
NOT FOR CONSTRUCTION

RAIL STANCHION DETAILS

R-4

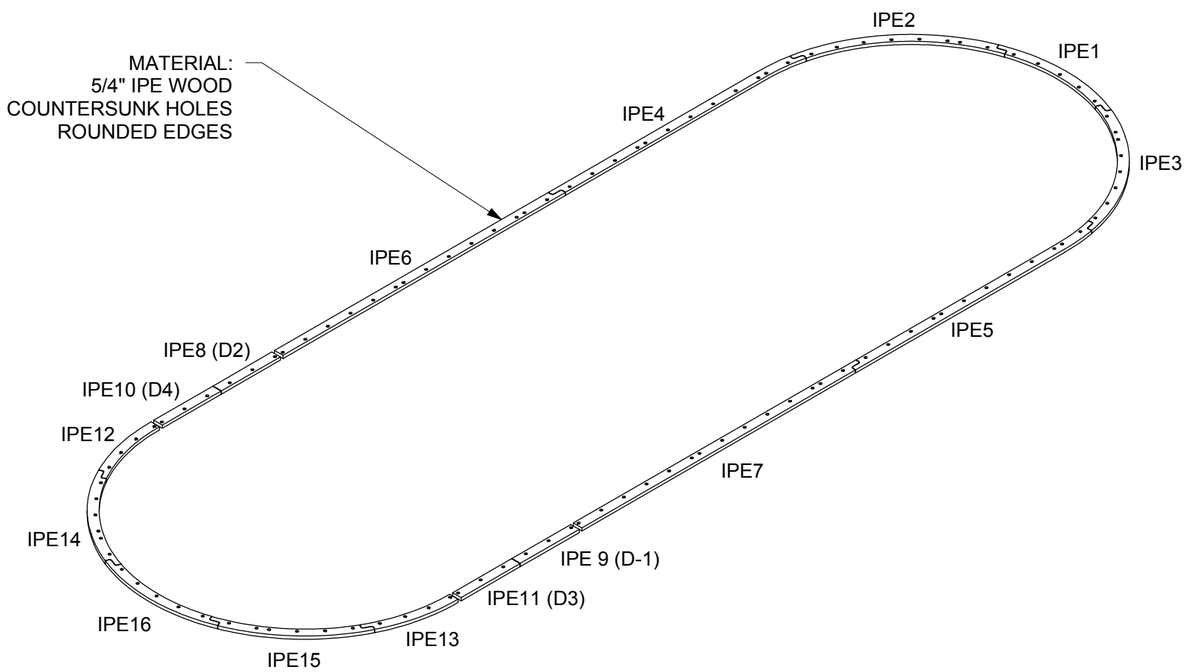

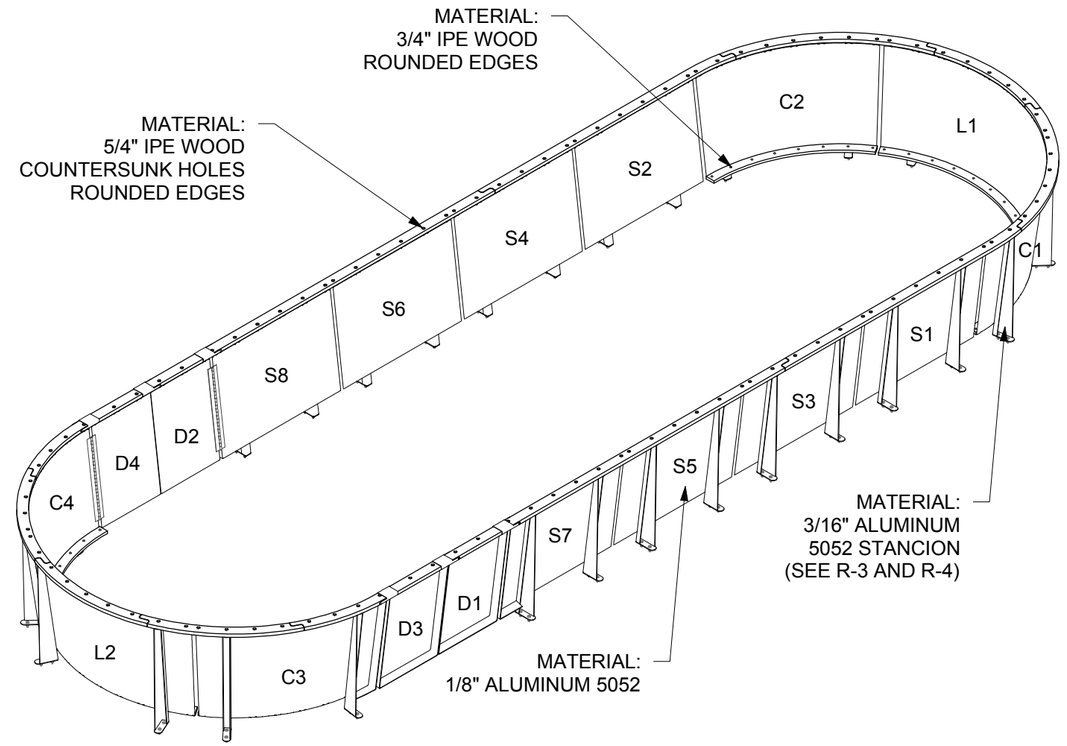

2 RAIL AXONOMETRIC

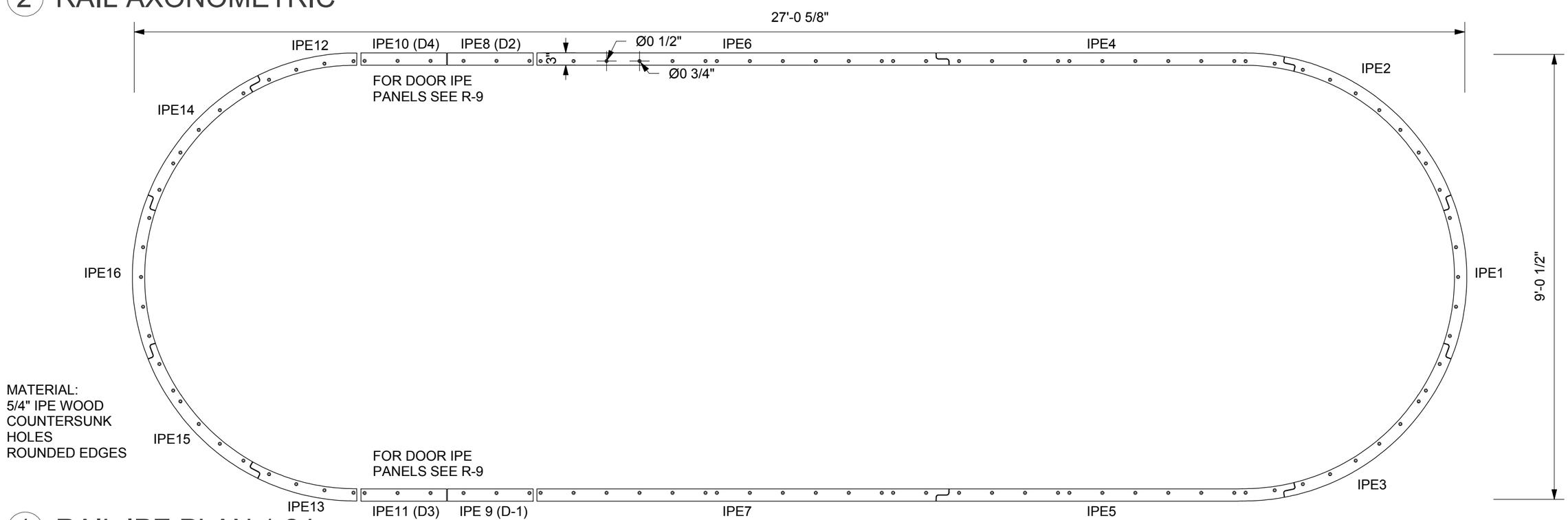

1 RAIL IPE PLAN 1:24

NOTE: ALL CUT FILES TO BE SUPPLIED TO WINNING BIDDER
NOTE: MUST BE COMPLETED TO THE SATISFACTION OF METALAB STUDIO (SEE SPECS)

NO.	ISSUE	DATE
1	BID SET	2 August 2016

Gregg Adams Design
Gregg Adams, Inc.
Naval Architect
3005 Canal Drive,
New Orleans, LA 70130
Louisiana 70130

NAVAL ARCHITECT

SAN ANTONIO RIVERBOATS
PROTOTYPE

[METALAB ARCHITECTURE]
20 N Sampson St
Houston, Texas 77003
713.426.3640
www.metalabstudio.com
info@metalabstudio.com

ARCHITECT

SAR

BID SET
NOT FOR CONSTRUCTION

SHEET SIZE: 12 X 18
SCALE AS NOTED

RAIL IPE PLAN
AND DETAILS

R-5

MATERIAL:
3/16" ALUMINUM
5052
PAINT FINISH
ONCE ASSEMBLED
(SEE COLOR INDEX)

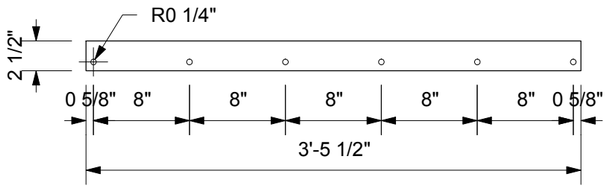

2 GUARDRAILS (S-SERIES) 1:12

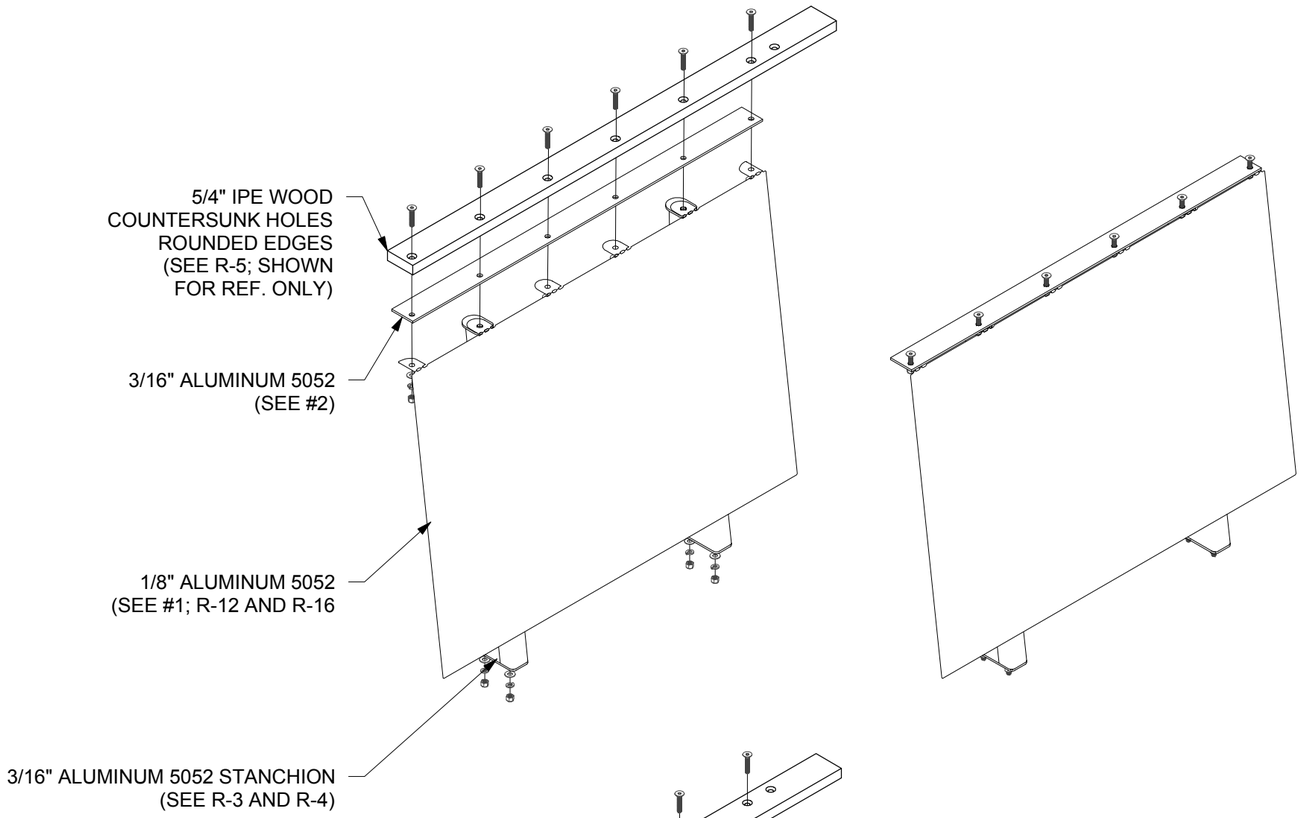

MATERIAL:
1/8" ALUMINUM
5052
WATERJET CUT
PAINT FINISH
ONCE ASSEMBLED
(SEE COLOR INDEX)

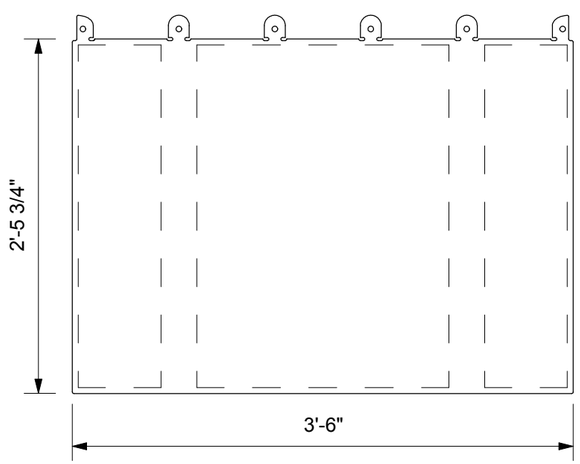

FOR ARTBOARD SEE R-12
FOR SAMPLE SEE R-16

1 RAIL PANEL (S-SERIES) 1:12

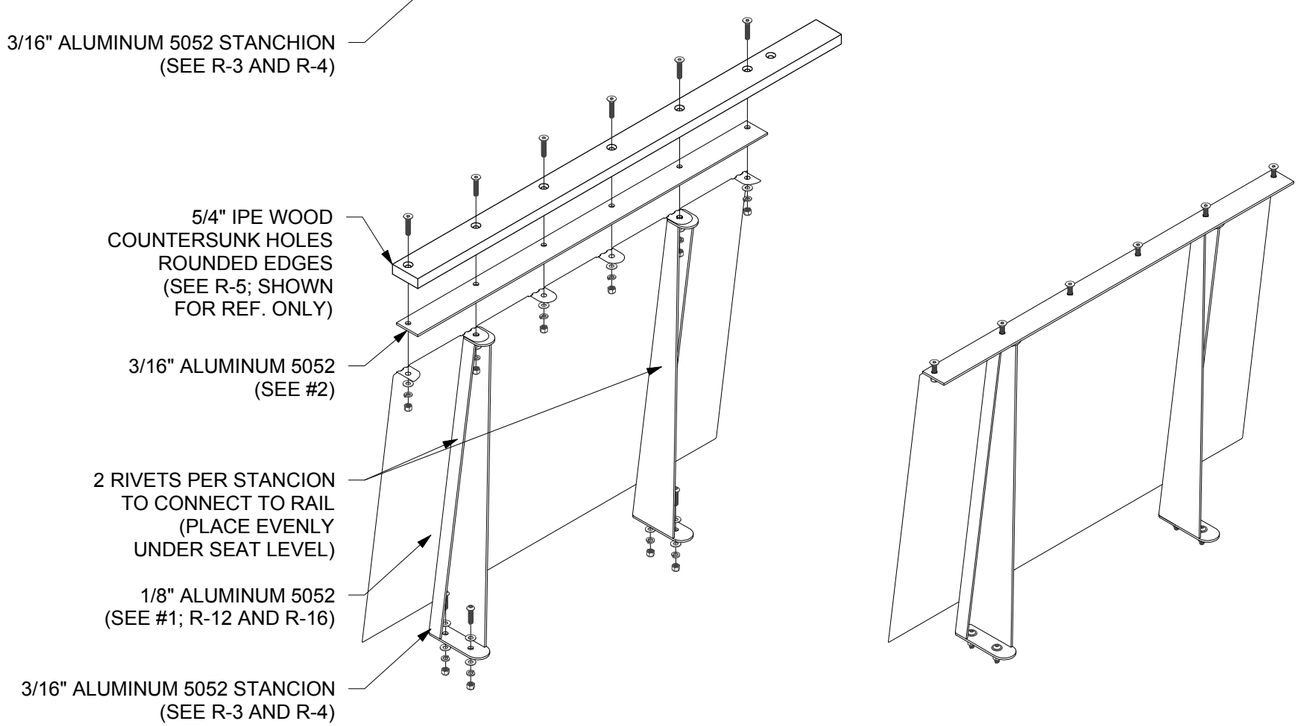

3 RAIL ASSEMBLY (S-SERIES) 1:12

NOTE: ALL CUT FILES TO BE
SUPPLIED TO WINNING BIDDER
NOTE: MUST BE COMPLETED
TO THE SATISFACTION OF
METALAB STUDIO (SEE SPECS)

NO.	ISSUE	DATE
1	BID SET	2 August 2016

SAN ANTONIO RIVERBOATS
PROTOTYPE

[METALAB ARCHITECTURE]
20 N Sampson St
Houston, Texas 77003
713.426.3640
www.metalabstudio.com
info@metalabstudio.com
ARCHITECT

Gensler Houston, Design
Architects, Inc.
3001 Caroll Drive,
Suite 1000, Houston, Texas
77019
NAVAL ARCHITECT

SAR

SHEET SIZE: 12 X 18
SCALE AS NOTED

BID SET
NOT FOR CONSTRUCTION

RAIL ASSEMBLY
DRAWINGS 1
S-SERIES

R-6

MATERIAL:
3/4" IPE WOOD
ROUNDED EDGES

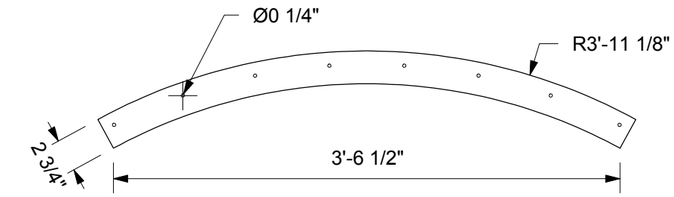

MATERIAL:
3/16" ALUMINUM
5052
PAINT FINISH
ONCE ASSEMBLED
(SEE COLOR INDEX)

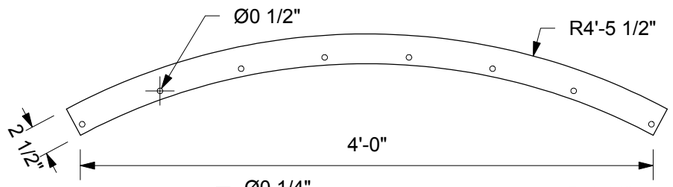

MATERIAL:
3/16" ALUMINUM
5052
PAINT FINISH
ONCE ASSEMBLED
(SEE COLOR INDEX)

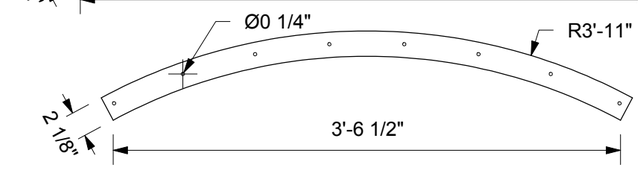

2 GUARDRAILS (C-SERIES) 1:12

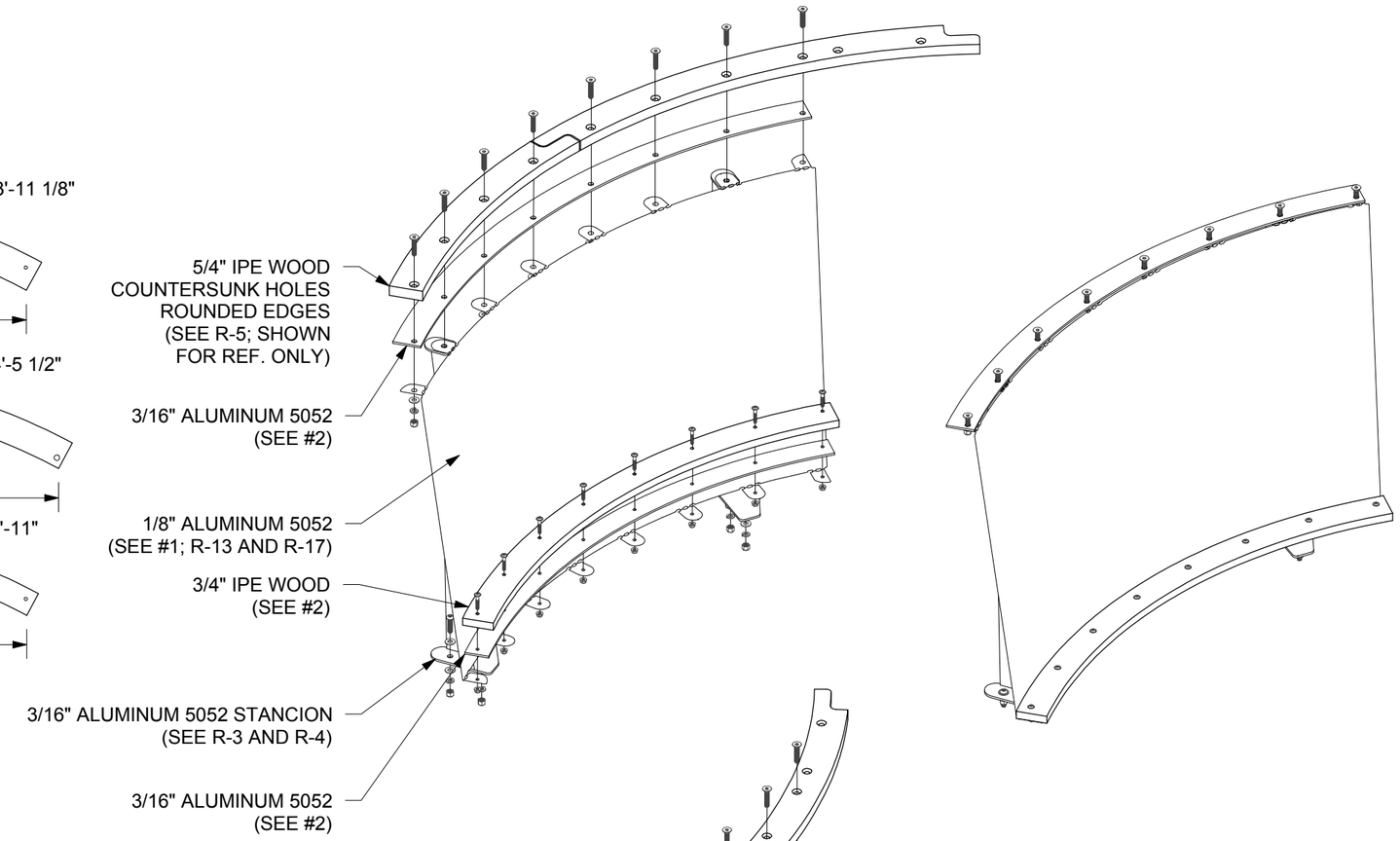

MATERIAL:
1/8" ALUMINUM
5052
WATERJET CUT
PAINT FINISH
ONCE ASSEMBLED
(SEE COLOR INDEX)

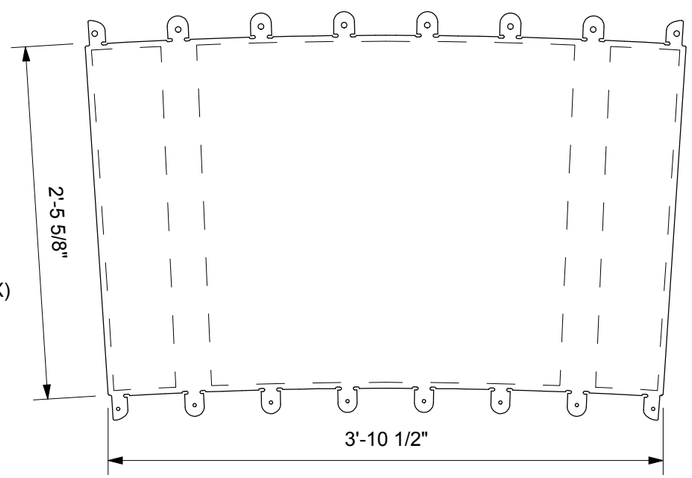

FOR ARTBOARD SEE R-13
FOR SAMPLE SEE R-17

1 RAIL PANEL (C-SERIES) 1:12

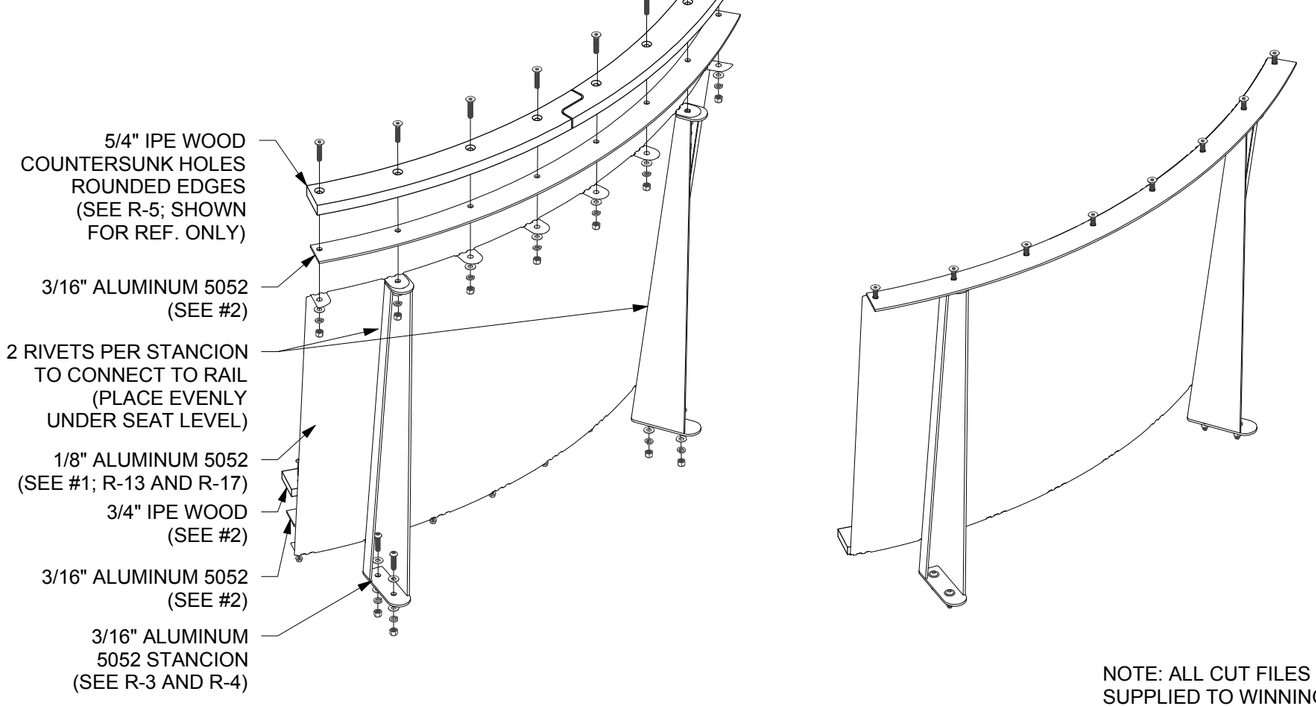

3 RAIL ASSEMBLY (C-SERIES) 1:12

NOTE: ALL CUT FILES TO BE
SUPPLIED TO WINNING BIDDER
NOTE: MUST BE COMPLETED
TO THE SATISFACTION OF
METALAB STUDIO (SEE SPECS)

NO.	ISSUE	DATE
1	BID SET	2 August 2016

SAN ANTONIO RIVERBOATS
PROTOTYPE

[METALAB ARCHITECTURE]
20 N Sampson St
Houston, Texas 77003
713.426.3640
www.metalabstudio.com
info@metalabstudio.com
ARCHITECT

Green Velvet Design
Green Velvet, Inc.
3005 Canal Drive,
Kenner, Louisiana 70062
NAVAL ARCHITECT

SAR

SHEET SIZE: 12 X 18
SCALE AS NOTED

BID SET
NOT FOR CONSTRUCTION

RAIL ASSEMBLY
DRAWINGS 2
C-SERIES

R-7

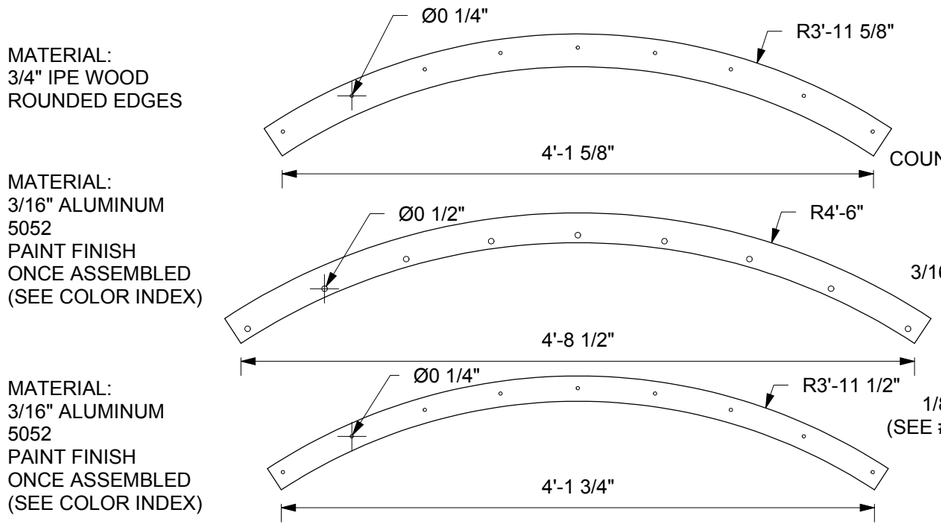

2 GUARDRAILS (L-SERIES) 1:12

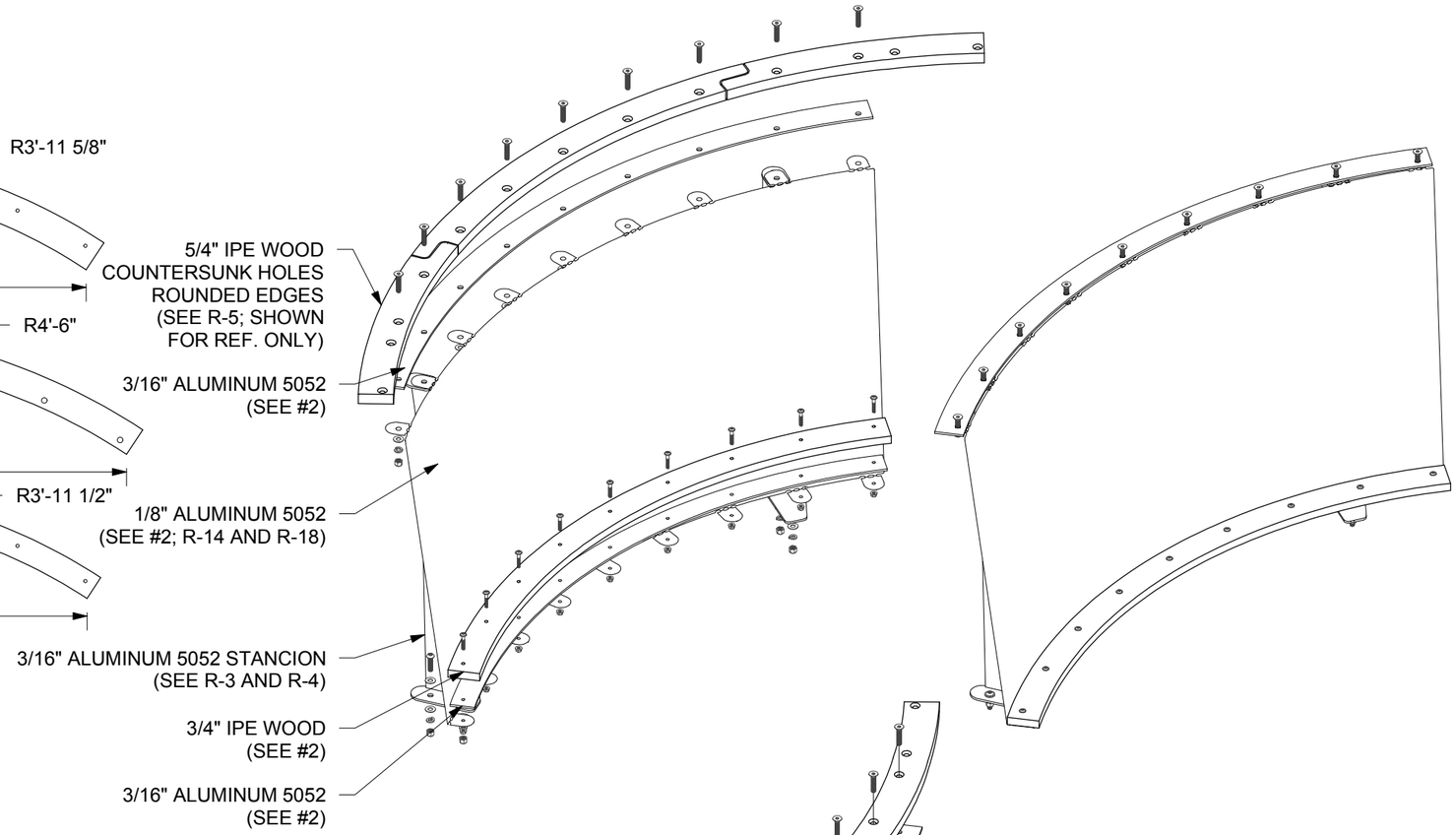

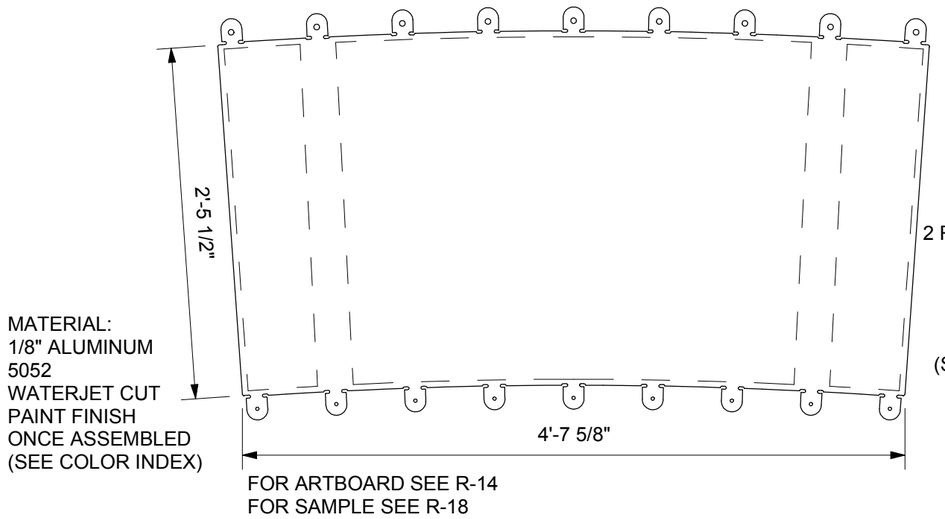

1 RAIL PANEL (L-SERIES) 1:12

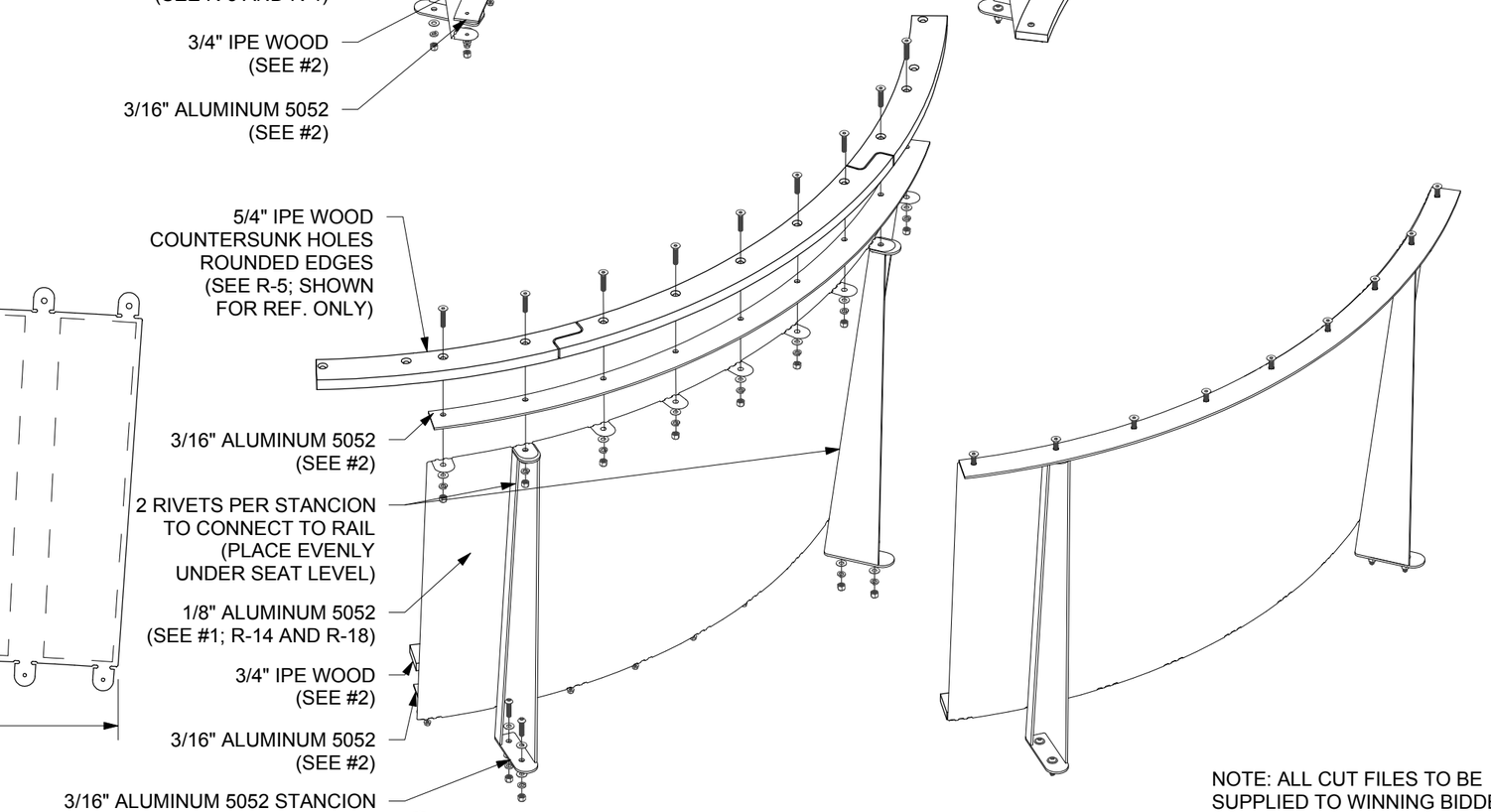

3 RAIL ASSEMBLY (L-SERIES) 1:12

NOTE: ALL CUT FILES TO BE SUPPLIED TO WINNING BIDDER
NOTE: MUST BE COMPLETED TO THE SATISFACTION OF METALAB STUDIO (SEE SPECS)

NO.	ISSUE	DATE
1	BID SET	2 August 2016

SAN ANTONIO RIVERBOATS
PROTOTYPE

[METALAB ARCHITECTURE]
20 N Sampson St
Houston, Texas 77003
713.426.3640
www.metalabstudio.com
info@metalabstudio.com
ARCHITECT

Gensler Texas Design Center, L.P.
3005 Carol Drive,
Kingwood, Texas
77339-3930
(281)360-7030
NAVAL ARCHITECT

SAR

SHEET SIZE: 12 X 18
SCALE AS NOTED

BID SET
NOT FOR CONSTRUCTION

RAIL ASSEMBLY DRAWINGS 3
L-SERIES

R-8

FOR HARDWARE AND DETAILS FOR DOOR LATCHING, SEE R-2
FOR OPENING AND CLOSING OF DOOR, SEE R-10 AND R-11

MATERIAL:
5/4" IPE WOOD
COUNTERSUNK
HOLES
ROUNDED EDGES

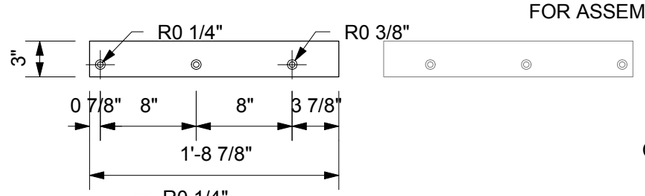

MATERIAL:
3/16" ALUMINUM
5052
PAINT FINISH
ONCE ASSEMBLED
(SEE COLOR INDEX)

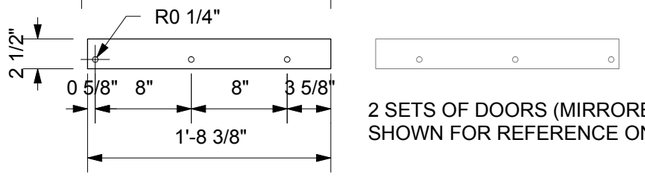

2 SETS OF DOORS (MIRRORED,
SHOWN FOR REFERENCE ONLY)

3 GUARDRAILS (D-SERIES) 1:12

MATERIAL:
3/16" ALUMINUM
5052
PAINT FINISH
ONCE ASSEMBLED
(SEE COLOR INDEX)
ONE PER DOOR

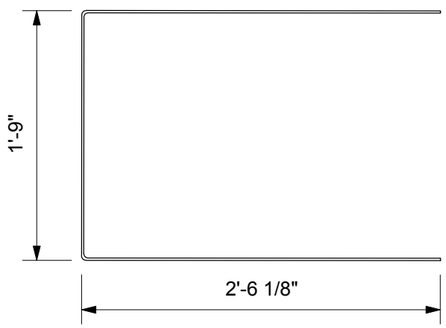

2 DOOR STIFFENER (D-SERIES) 1:12

MATERIAL:
1/8" ALUMINUM
5052
WATERJET CUT
PAINT FINISH
ONCE ASSEMBLED
(SEE COLOR INDEX)

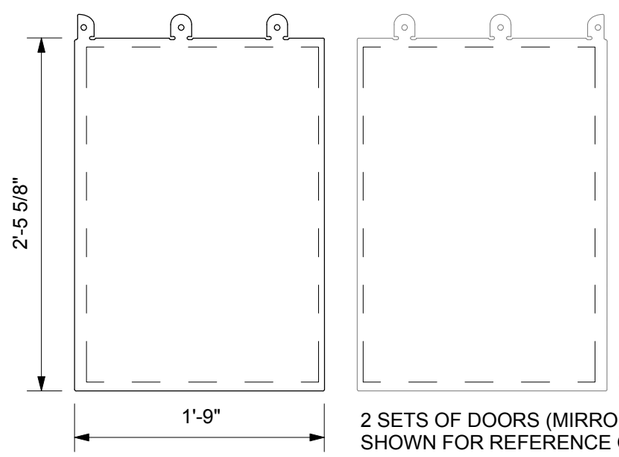

2 SETS OF DOORS (MIRRORED,
SHOWN FOR REFERENCE ONLY)

FOR ARTBOARD SEE R-15
FOR SAMPLE SEE R-19

1 RAIL PANEL (D-SERIES) 1:12

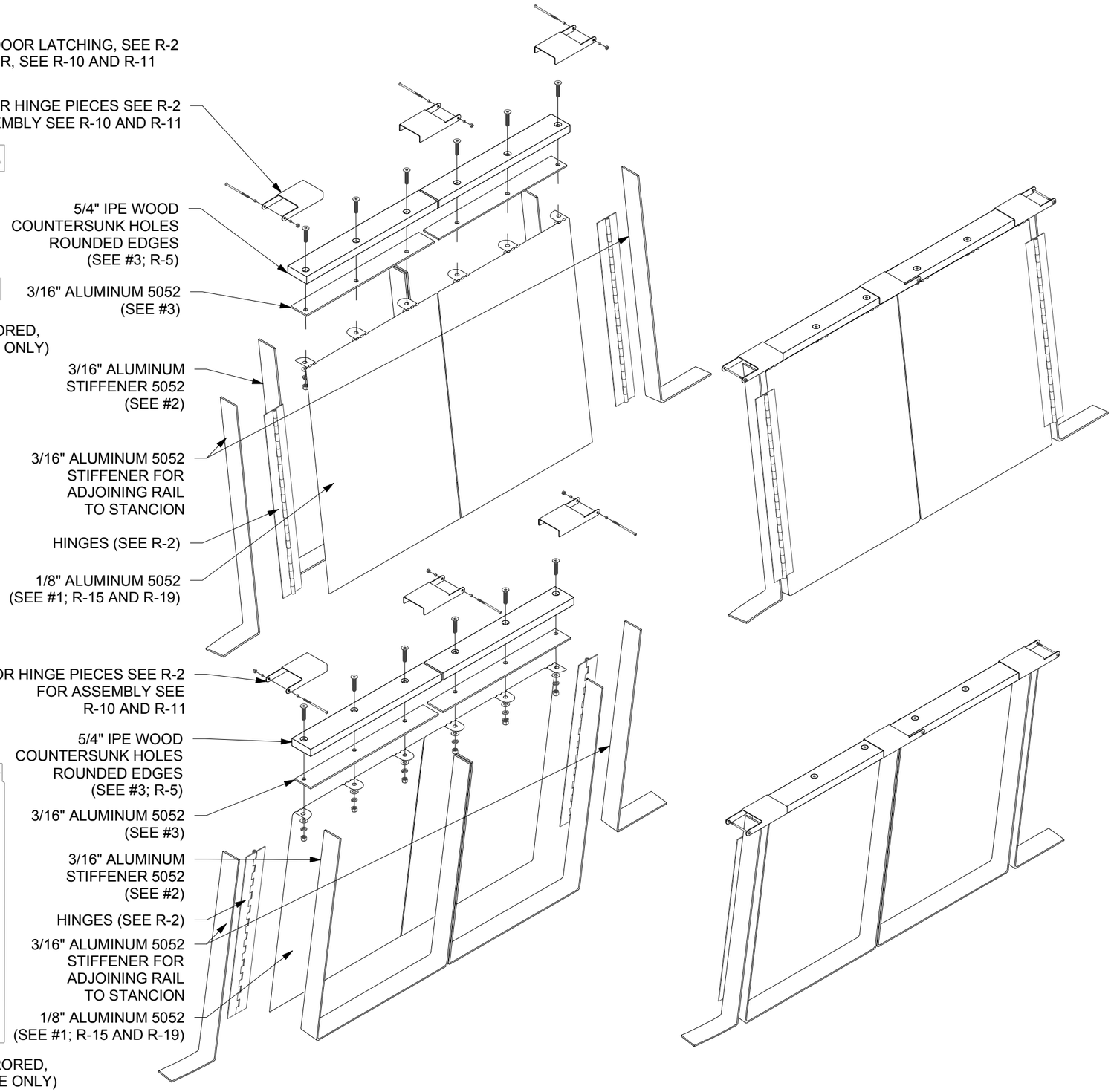

4 RAIL ASSEMBLY (D-SERIES) 1:12

NOTE: ALL CUT FILES TO BE
SUPPLIED TO WINNING BIDDER
NOTE: MUST BE COMPLETED
TO THE SATISFACTION OF
METALAB STUDIO (SEE SPECS)

NO.	ISSUE	DATE
1	BID SET	2 August 2016

SAN ANTONIO RIVERBOATS
PROTOTYPE

[METALAB ARCHITECTURE]
20 N Sampson St
Houston, Texas 77003
713.426.3640
www.metalabstudio.com
info@metalabstudio.com
ARCHITECT

Gensler Texas Design
Center, Houston, Texas
3001 Caesar Drive,
Fort Polk, Louisiana 70570
NAVAL ARCHITECT

SAR

SHEET SIZE: 12 X 18
SCALE AS NOTED

BID SET
NOT FOR CONSTRUCTION

RAIL ASSEMBLY
DRAWINGS 4
D-SERIES

R-9

FOR DOOR LATCH, SEE R-2
FOR DOOR ASSEMBLY, SEE R-9

FOR HINGE DETAILS, SEE R-2

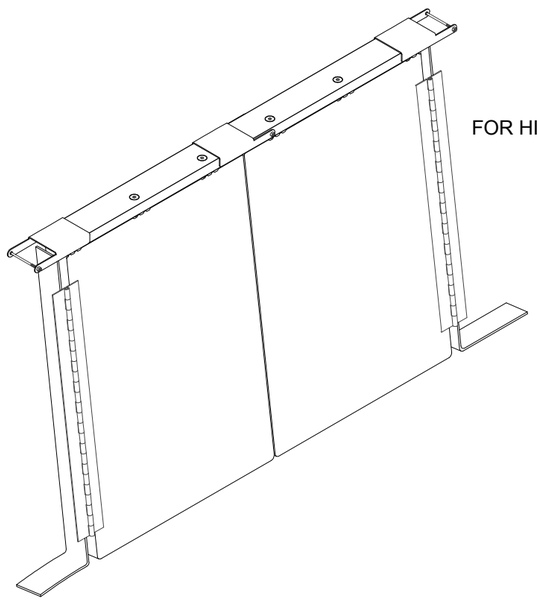

DOOR COMPONENT

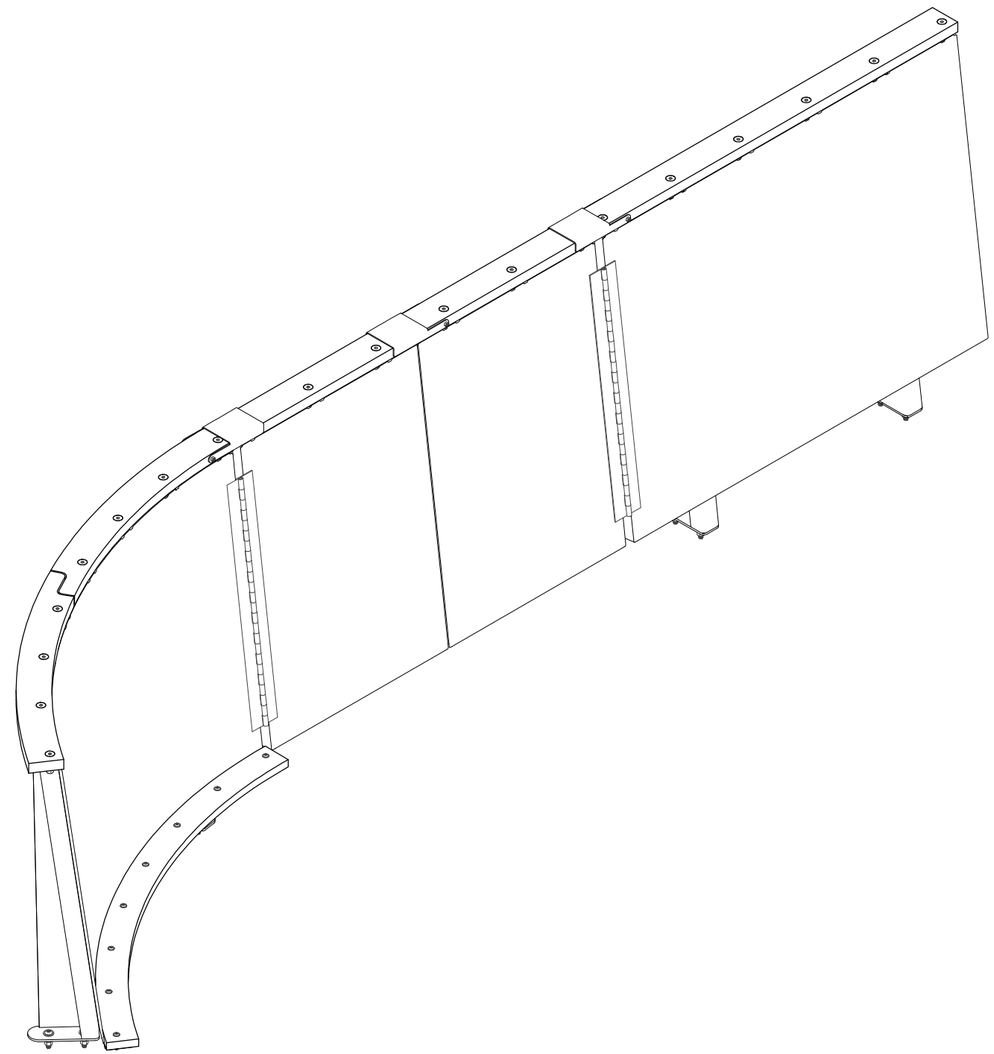

CLOSED AND LATCHED DOOR

1 DOOR LATCHING MECHANISM 1 (D-SERIES)

NOTE: MUST BE COMPLETED TO THE SATISFACTION OF METALAB STUDIO (SEE SPECS)

NO.	ISSUE	DATE
1	BID SET	2 August 2016

SAN ANTONIO RIVERBOATS
PROTOTYPE

[METALAB ARCHITECTURE]
20 N Sampson St
Houston, Texas 77003
713.426.3640
www.metalabstudio.com
info@metalabstudio.com
ARCHITECT

Gensler Helmut Jahn Architects, Inc.
300E Carol Drive,
St. Charles, Illinois 60174
NAVAL ARCHITECT

SAR

SHEET SIZE: 12 X 18
SCALE AS NOTED

BID SET
NOT FOR CONSTRUCTION

RAIL DOOR
LOCKING
MECHANISM 1
D-SERIES

R-10

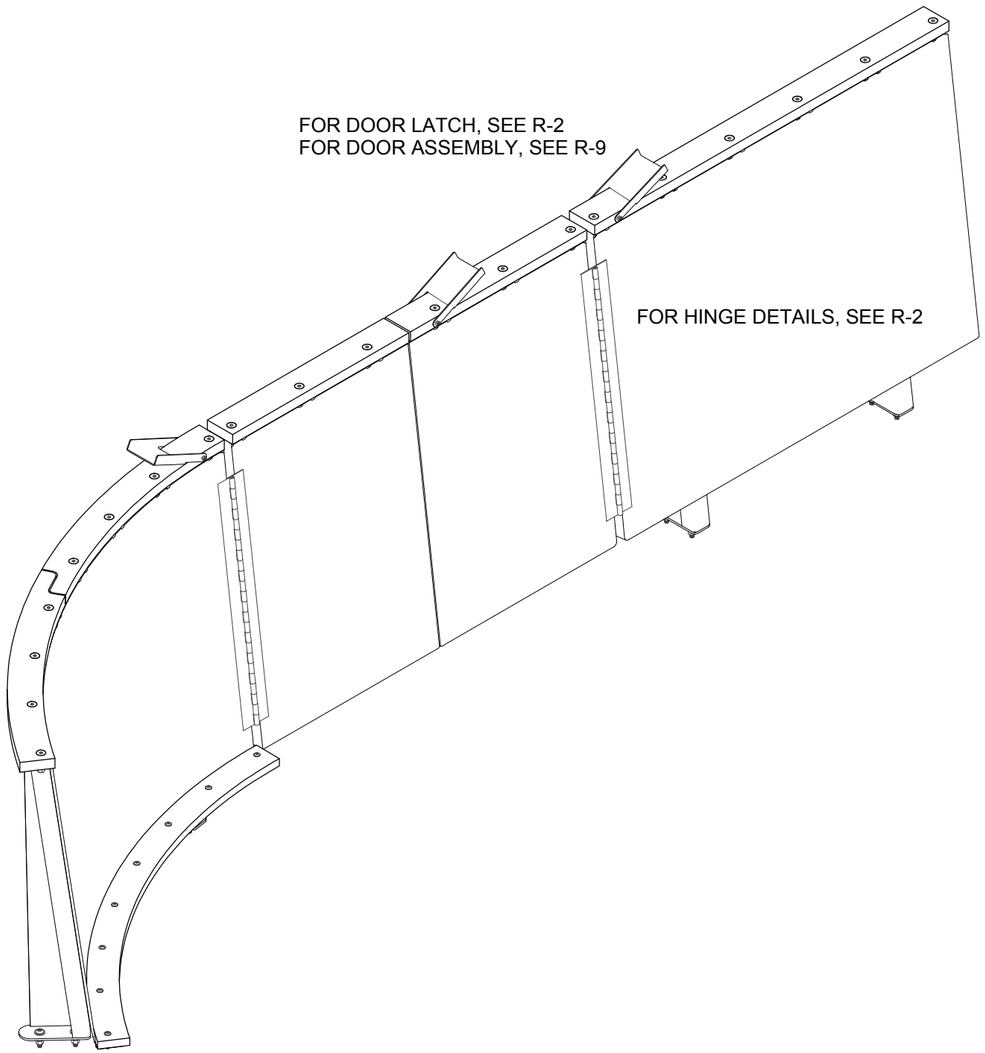

CLOSED AND UNLATCHED DOOR

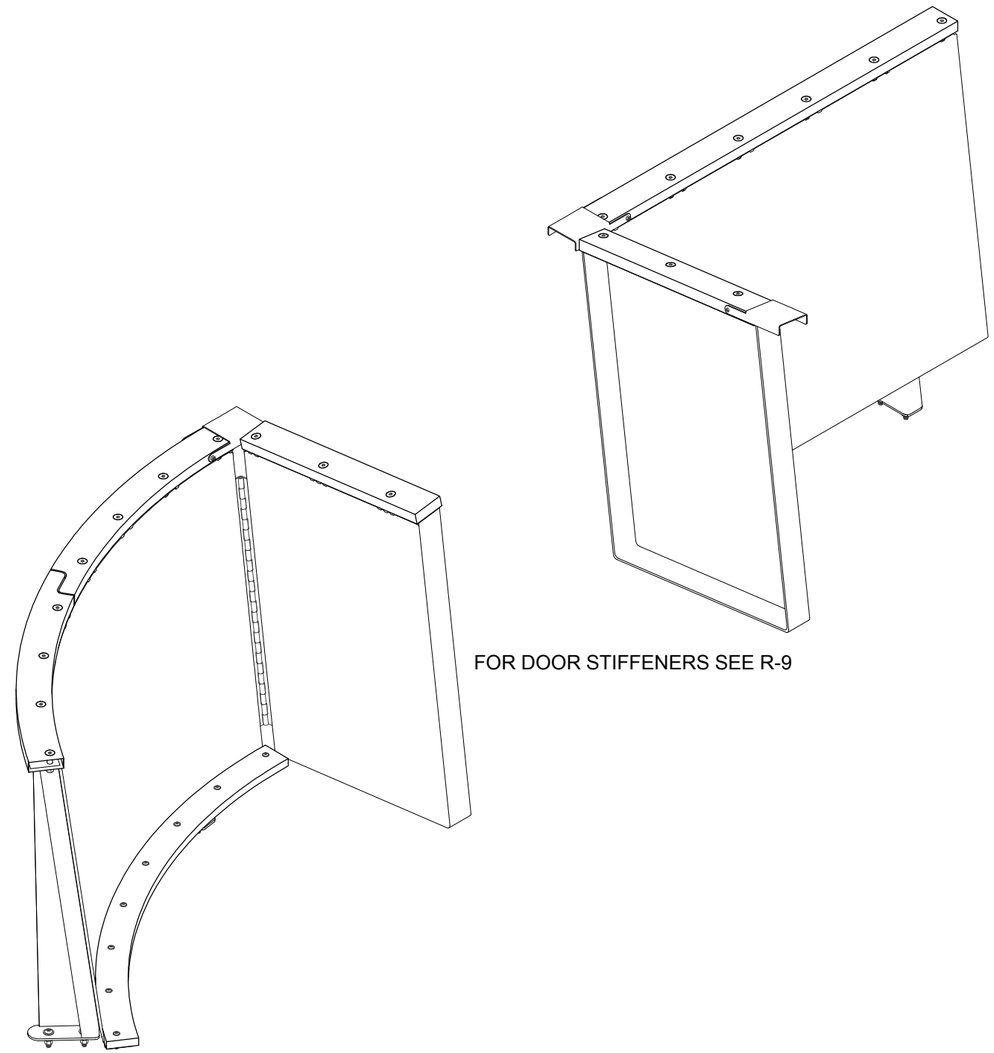

OPEN AND LATCHED DOOR

1 DOOR LATCHING MECHANISM 2 (D-SERIES)

NOTE: MUST BE COMPLETED TO THE SATISFACTION OF METALAB STUDIO (SEE SPECS)

NO.	ISSUE	DATE
1	BID SET	2 August 2016

SAN ANTONIO RIVERBOATS
PROTOTYPE

[METALAB ARCHITECTURE]
20 N Sampson St
Houston, Texas 77003
713.426.3640
www.metalabstudio.com
info@metalabstudio.com
ARCHITECT

Gunn Yates Design
Gunn Yates, Ltd.
3005 Carol Drive,
Kenner, Louisiana 70062
(504)468-7030
NAVAL ARCHITECT

SAR

BID SET
NOT FOR CONSTRUCTION

SHEET SIZE: 12 X 18
SCALE AS NOTED

RAIL DOOR
LOCKING
MECHANISM 2
D-SERIES

R-11

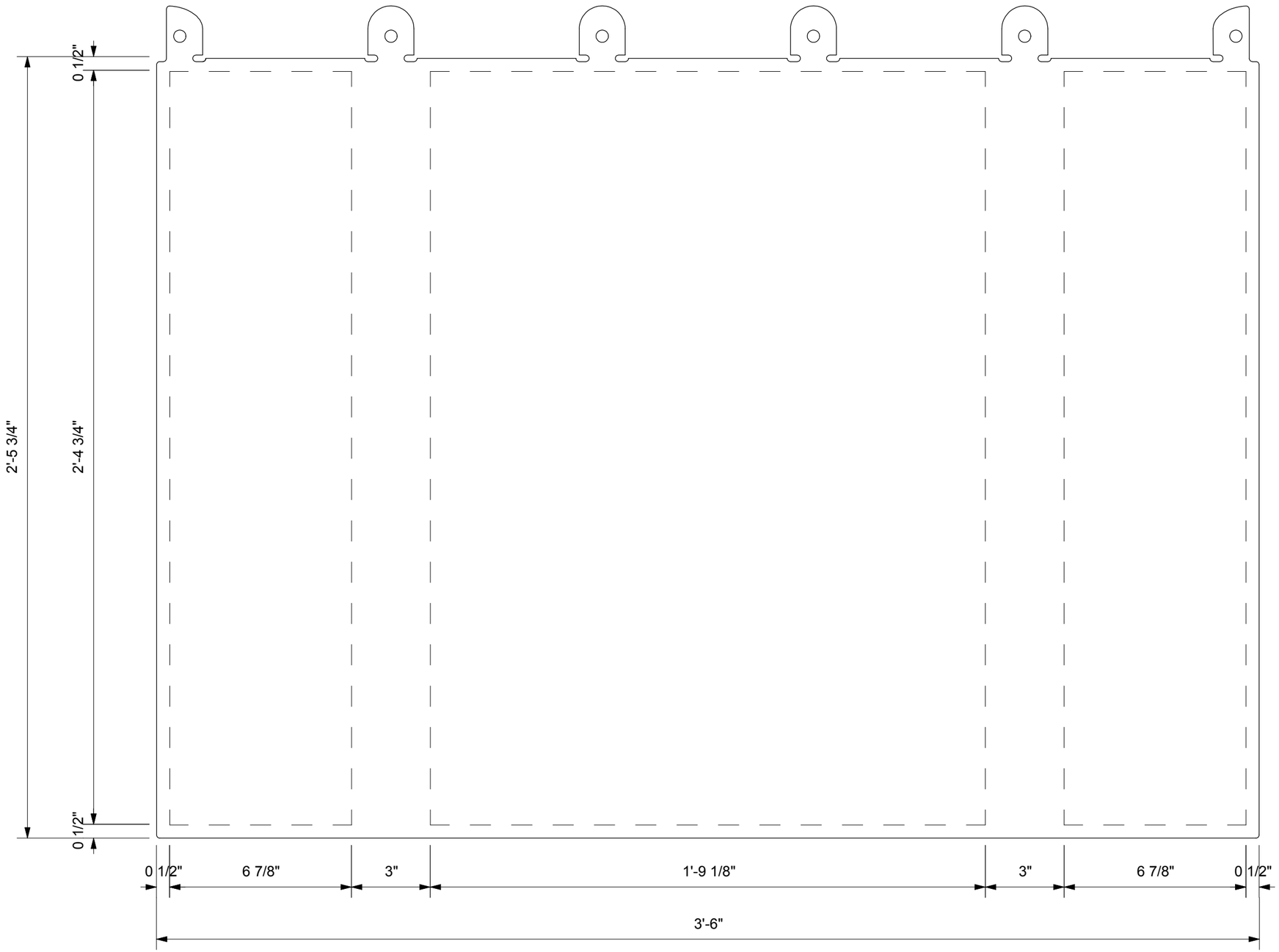

MATERIAL: 1/8" ALUMINUM 5052 WATERJET CUT, DEBURR, PAINT FINISH ONCE ASSEMBLED (SEE COLOR INDEX)

1 RAIL ARTBOARD (S-SERIES)

NOTE: ALL CUT FILES TO BE SUPPLIED TO WINNING BIDDER
NOTE: MUST BE COMPLETED TO THE SATISFACTION OF METALAB STUDIO (SEE SPECS)

NO.	ISSUE	DATE
1	BID SET	2 August 2016

SAN ANTONIO RIVERBOATS
PROTOTYPE

[METALAB ARCHITECTURE]
20 N Sampson St
Houston, Texas 77003
713.426.3640
www.metalabstudio.com
info@metalabstudio.com
ARCHITECT

Gresip Maine Design
Group, Inc.
3001 Canal Drive,
New Orleans, La
Louisiana 70130
NAVAL ARCHITECT

SAR

SHEET SIZE: 12 X 18
SCALE AS NOTED

BID SET
NOT FOR CONSTRUCTION

RAIL ARTBOARD
AREA 1
S-SERIES

R-12

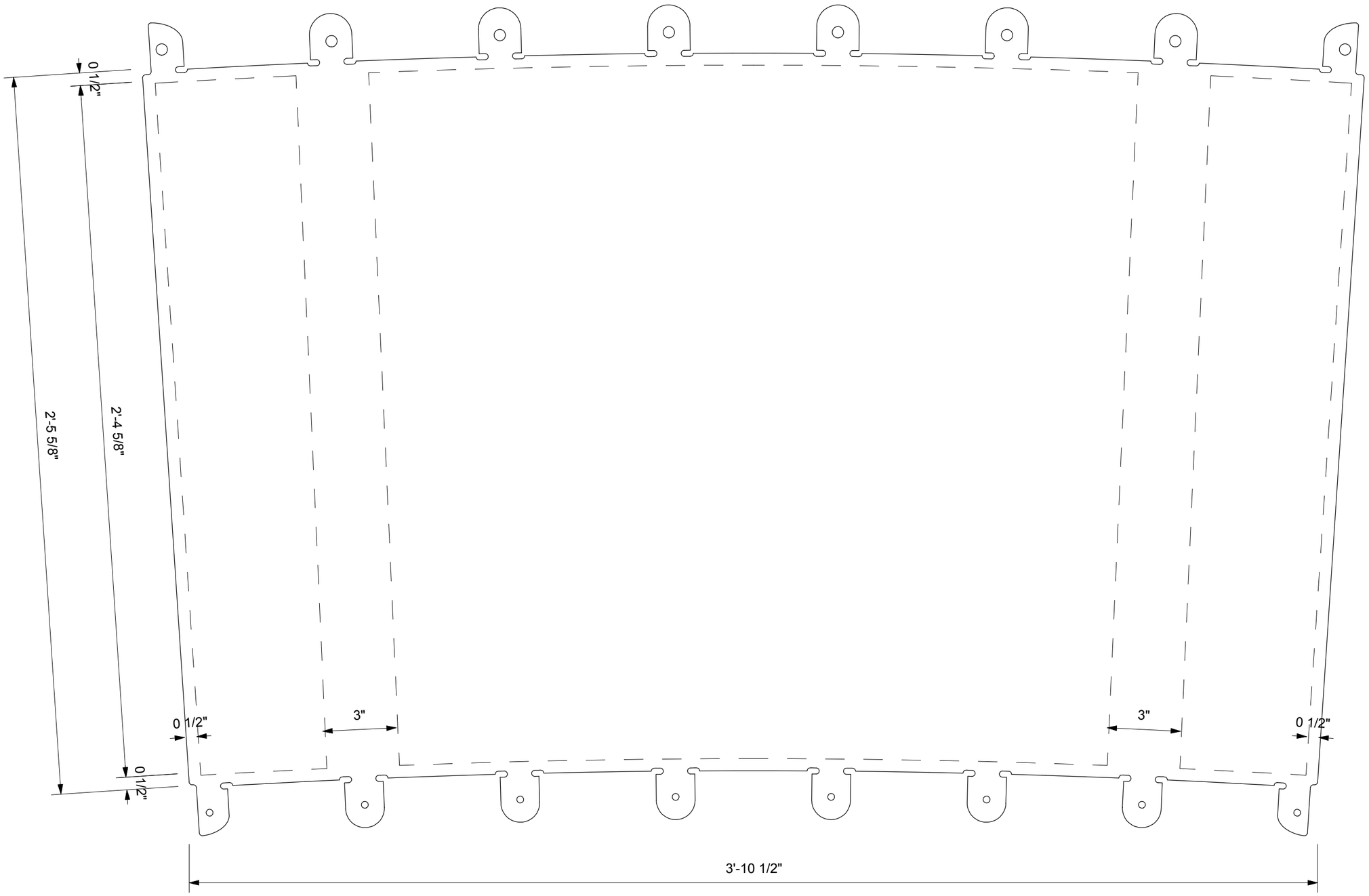

MATERIAL: 1/8" ALUMINUM 5052 WATERJET CUT, DEBURR, PAINT FINISH ONCE ASSEMBLED (SEE COLOR INDEX)

1 RAIL ARTBOARD (C-SERIES)

NOTE: ALL CUT FILES TO BE SUPPLIED TO WINNING BIDDER
NOTE: MUST BE COMPLETED TO THE SATISFACTION OF METALAB STUDIO (SEE SPECS)

NO.	ISSUE	DATE
1	BID SET	2 August 2016

SAN ANTONIO RIVERBOATS
PROTOTYPE

[METALAB ARCHITECTURE]
20 N Sampson St
Houston, Texas 77003
713.426.3640
www.metalabstudio.com
info@metalabstudio.com
ARCHITECT

Gresip Fabric Design
Gresip Fabric Design
3001 Canal Drive,
New Orleans, La
Louisiana 70130
NAVAL ARCHITECT

SAR

SHEET SIZE: 12 X 18
SCALE AS NOTED

BID SET
NOT FOR CONSTRUCTION

RAIL ARTBOARD
AREA 2
C-SERIES

R-13

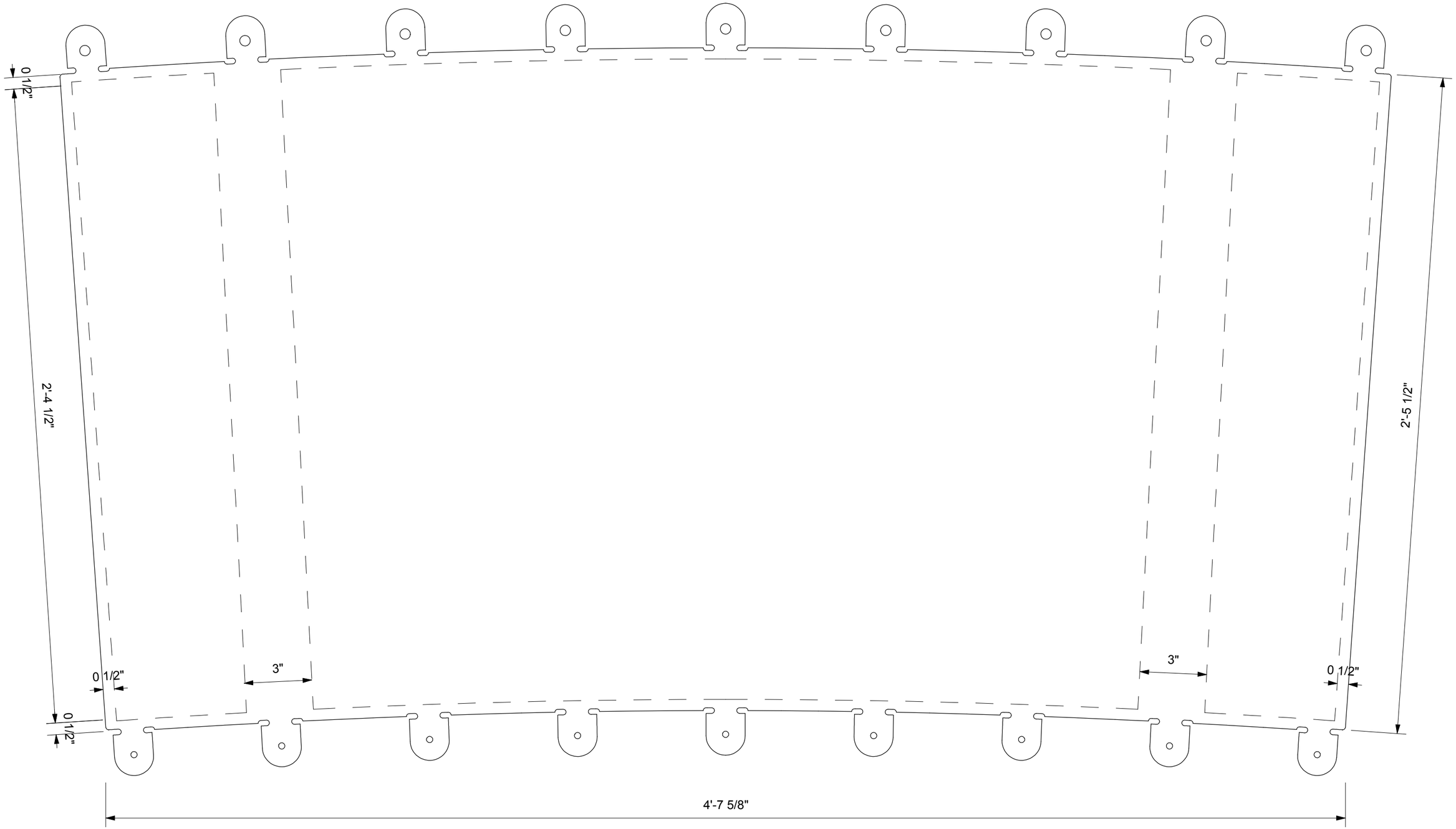

MATERIAL: 1/8" ALUMINUM 5052 WATERJET CUT, DEBURR, PAINT FINISH ONCE ASSEMBLED (SEE COLOR INDEX)

1 RAIL ARTBOARD (L-SERIES)

NOTE: ALL CUT FILES TO BE SUPPLIED TO WINNING BIDDER
NOTE: MUST BE COMPLETED TO THE SATISFACTION OF METALAB STUDIO (SEE SPECS)

NO.	ISSUE	DATE
1	BID SET	2 August 2016

SAN ANTONIO RIVERBOATS
PROTOTYPE

[METALAB ARCHITECTURE]
20 N Sampson St
Houston, Texas 77003
713.426.3640
www.metalabstudio.com
info@metalabstudio.com
ARCHITECT

Gresham Smith and Partners, Inc.
3005 Carrollton Ave.
New Orleans, LA 70118
(504)866-7030
NAVAL ARCHITECT

SAR

SHEET SIZE: 12 X 18
SCALE AS NOTED

BID SET
NOT FOR CONSTRUCTION

RAIL ARTBOARD
AREA 3
L-SERIES

R-14

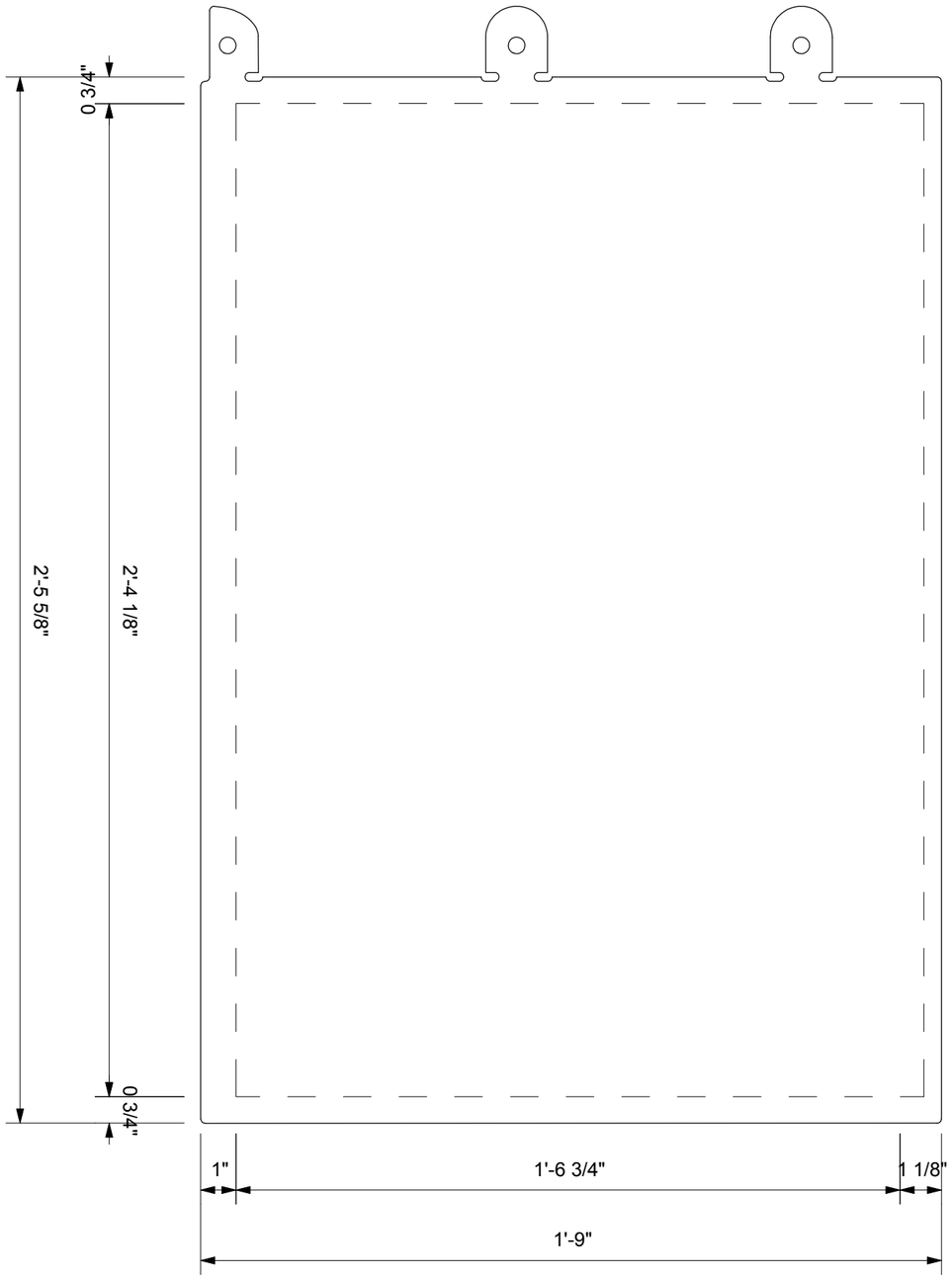

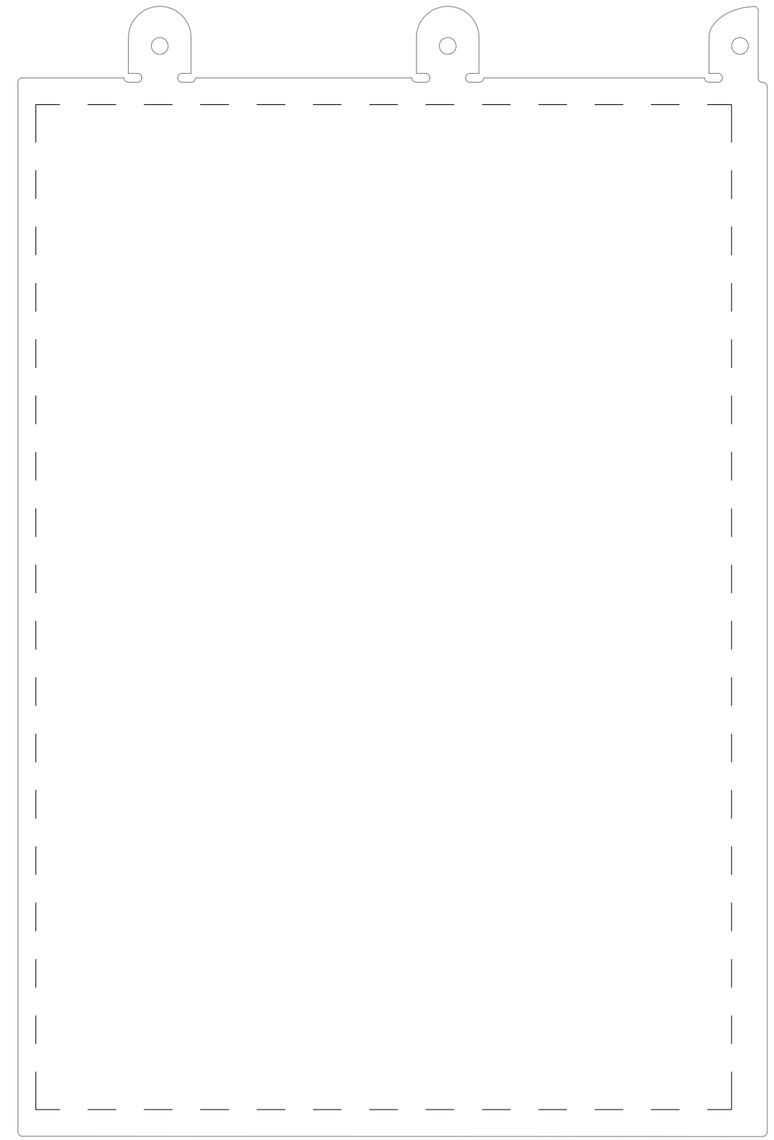

2 SETS OF DOORS (MIRRORED, SHOWN FOR REFERENCE ONLY)

MATERIAL: 1/8" ALUMINUM 5052 WATERJET CUT, DEBURR, PAINT FINISH ONCE ASSEMBLED (SEE COLOR INDEX)

1 RAIL ARTBOARD (D-SERIES)

NOTE: ALL CUT FILES TO BE SUPPLIED TO WINNING BIDDER
NOTE: MUST BE COMPLETED TO THE SATISFACTION OF METALAB STUDIO (SEE SPECS)

NO.	ISSUE	DATE
1	BID SET	2 August 2016

SAN ANTONIO RIVERBOATS
PROTOTYPE

[METALAB ARCHITECTURE]
20 N Sampson St
Houston, Texas 77003
713.426.3640
www.metalabstudio.com
info@metalabstudio.com
ARCHITECT

Gensler Texas, Design Architects, Inc.
300N. Canal Drive, Suite 200
Lexington, KY 40507
NAVAL ARCHITECT

SAR

SHEET SIZE: 12 X 18
SCALE AS NOTED

BID SET
NOT FOR CONSTRUCTION

RAIL ARTBOARD
AREA 4
D-SERIES

R-15

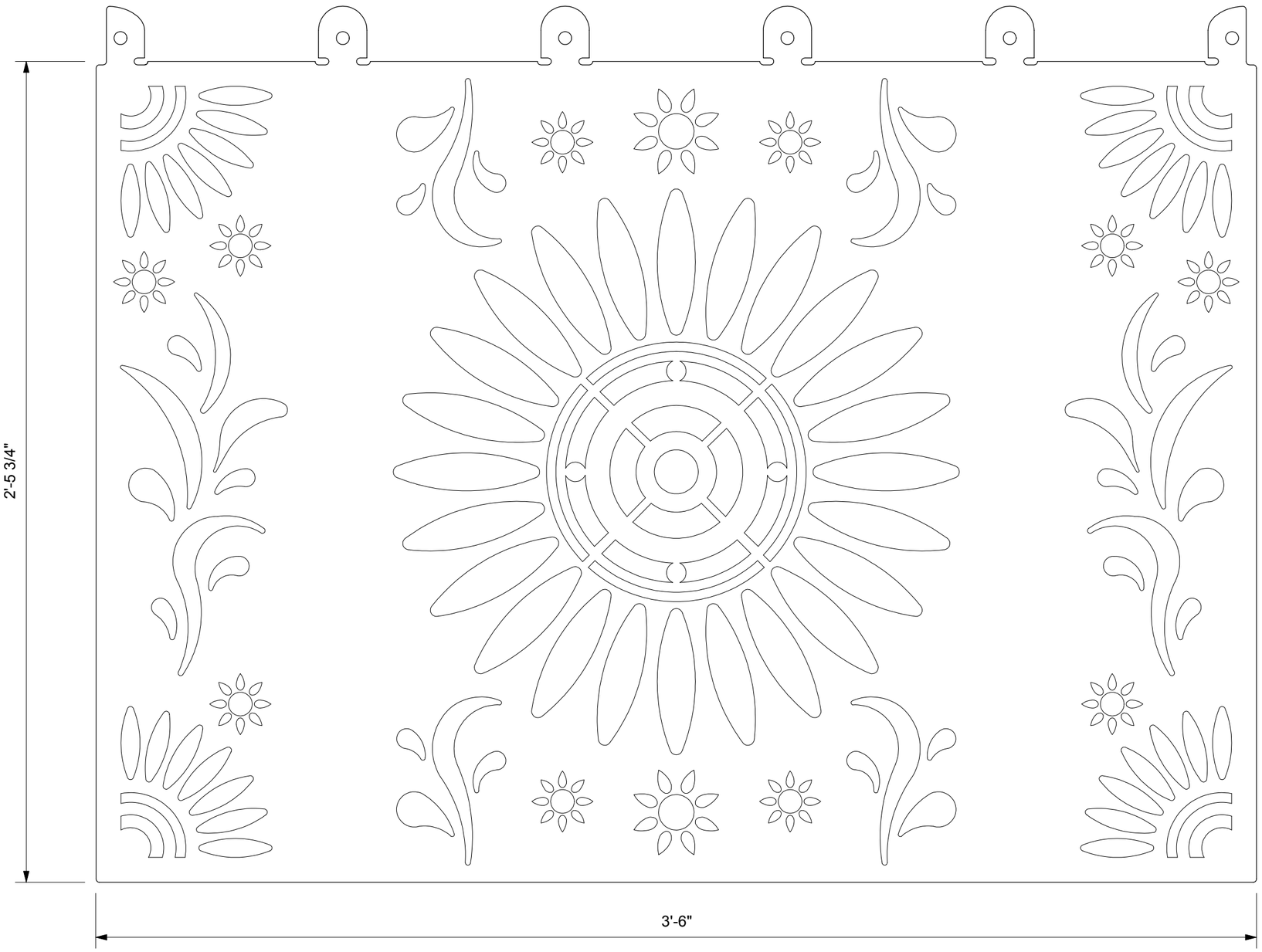

MATERIAL: 1/8" ALUMINUM 5052 WATERJET CUT, DEBURR, PAINT FINISH ONCE ASSEMBLED (SEE COLOR INDEX)

1 RAIL SAMPLE (S-SERIES) 1:4

NOTE: ALL CUT FILES TO BE SUPPLIED TO WINNING BIDDER
NOTE: MUST BE COMPLETED TO THE SATISFACTION OF METALAB STUDIO (SEE SPECS)

NO.	ISSUE	DATE
1	BID SET	2 August 2016

SAN ANTONIO RIVERBOATS
PROTOTYPE

[METALAB ARCHITECTURE]
20 N Sampson St
Houston, Texas 77003
713.426.3640
www.metalabstudio.com
info@metalabstudio.com
ARCHITECT

Gensler Houston, Design Architects, Texas
3005 Carroll Ave.
Houston, Texas 77004
Louisiana 70130
NAVAL ARCHITECT

SAR

SHEET SIZE: 12 X 18
SCALE AS NOTED

BID SET
NOT FOR CONSTRUCTION

RAIL ARTBOARD
SAMPLE 1
S-SERIES

R-16

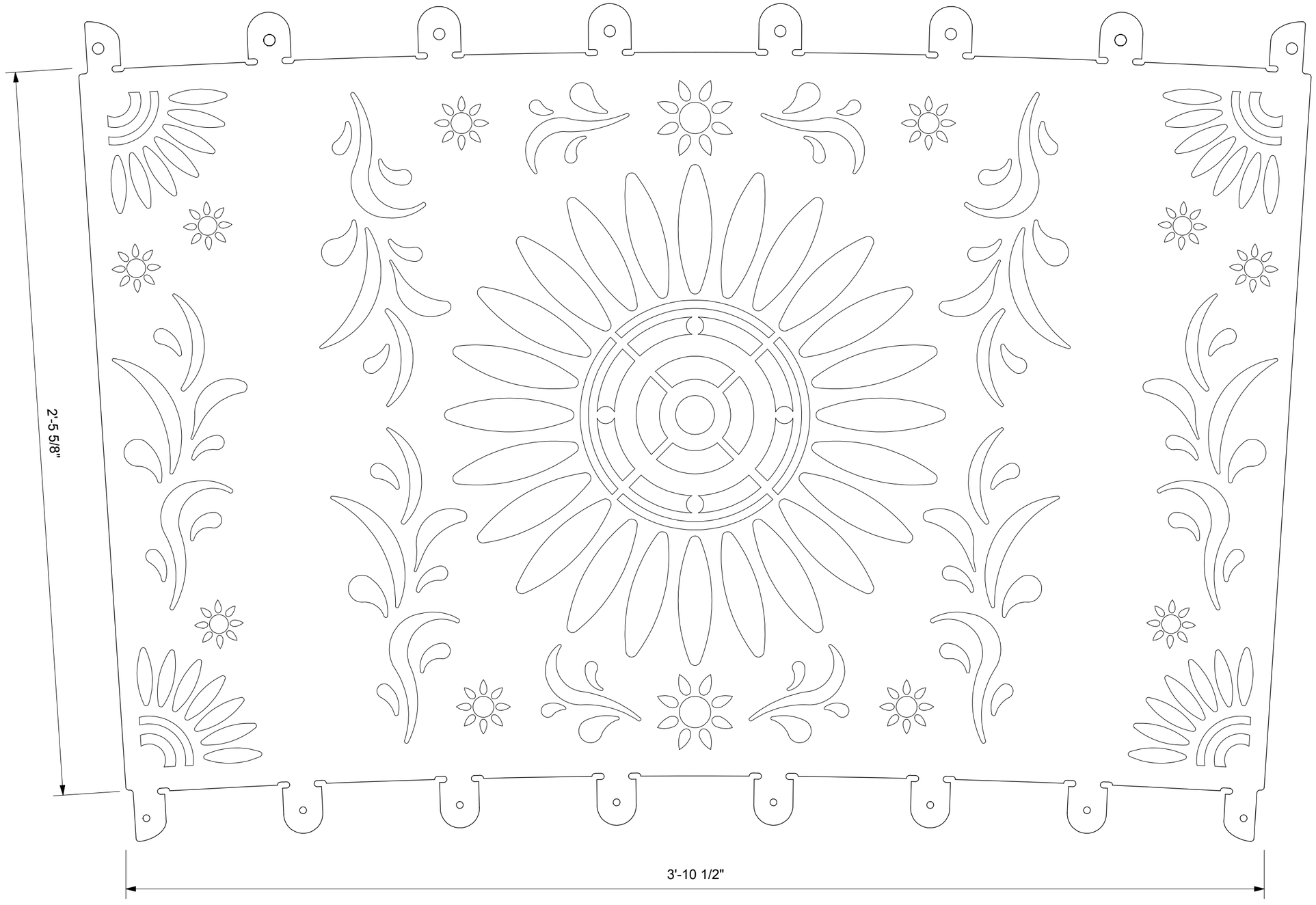

MATERIAL: 1/8" ALUMINUM 5052 WATERJET CUT, DEBURR, PAINT FINISH ONCE ASSEMBLED (SEE COLOR INDEX)

1 RAIL SAMPLE (C-SERIES) 1:4

NOTE: ALL CUT FILES TO BE SUPPLIED TO WINNING BIDDER
NOTE: MUST BE COMPLETED TO THE SATISFACTION OF METALAB STUDIO (SEE SPECS)

NO.	ISSUE	DATE
1	BID SET	2 August 2016

SAN ANTONIO RIVERBOATS
PROTOTYPE

[METALAB ARCHITECTURE]
20 N Sampson St
Houston, Texas 77003
713.426.3640
www.metalabstudio.com
info@metalabstudio.com
ARCHITECT

Gensler Texas Design
Gensler Texas, Inc.
3005 Carol Drive,
Kenner, Louisiana 70062
(504) 464-7036
NAVAL ARCHITECT

SAR

SHEET SIZE: 12 X 18
SCALE AS NOTED

BID SET
NOT FOR CONSTRUCTION

RAIL ARTBOARD
SAMPLE 2
C-SERIES

R-17

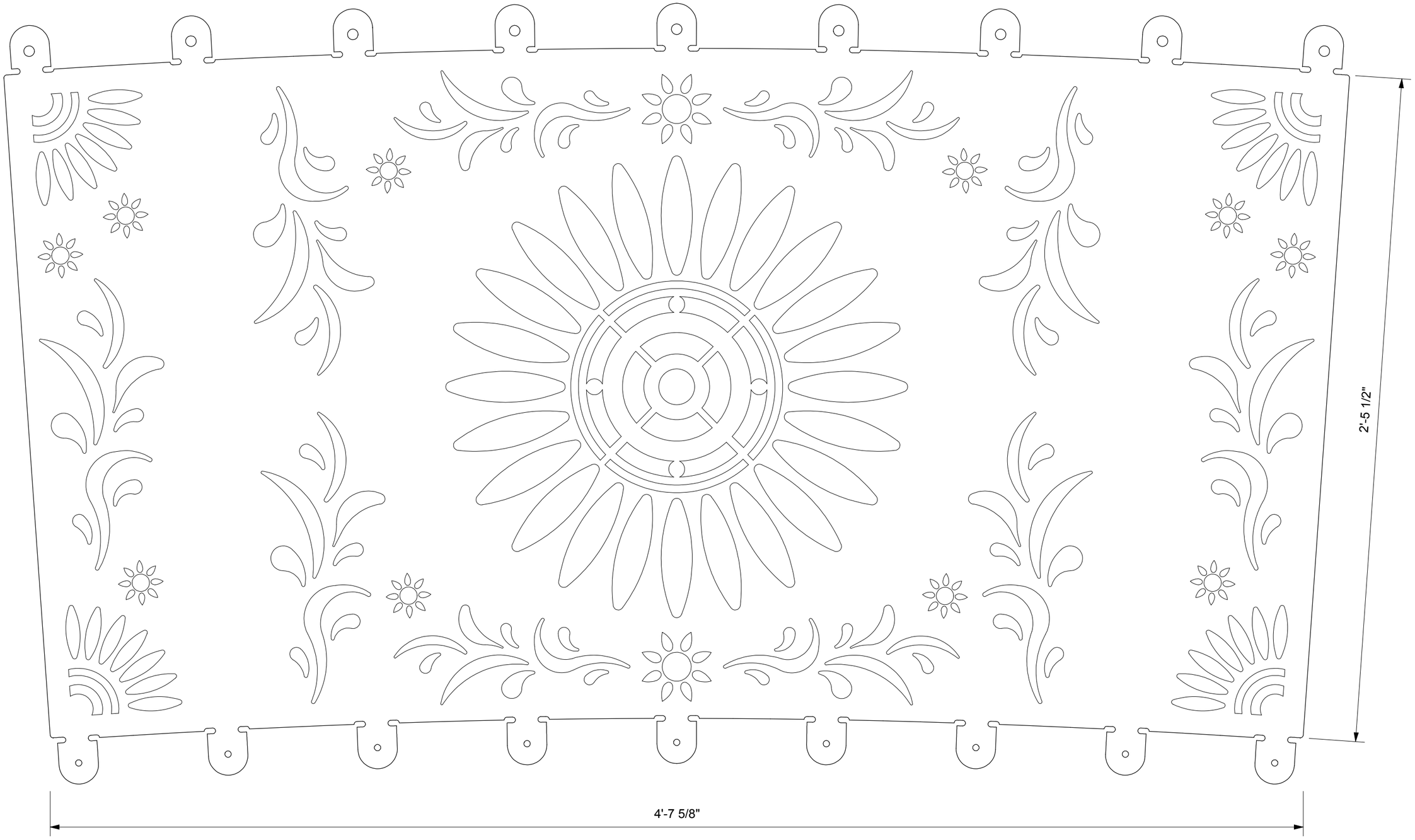

MATERIAL: 1/8" ALUMINUM 5052 WATERJET CUT, DEBURR, PAINT FINISH ONCE ASSEMBLED (SEE COLOR INDEX)

1 RAIL SAMPLE (L-SERIES) 1:4

NOTE: ALL CUT FILES TO BE SUPPLIED TO WINNING BIDDER
NOTE: MUST BE COMPLETED TO THE SATISFACTION OF METALAB STUDIO (SEE SPECS)

NO.	ISSUE	DATE
1	BID SET	2 August 2016

SAN ANTONIO RIVERBOATS
PROTOTYPE

[METALAB ARCHITECTURE]
20 N Sampson St
Houston, Texas 77003
713.426.3640
www.metalabstudio.com
info@metalabstudio.com
ARCHITECT

Gensler Texas, Design
Architects, Inc.
3005 Carroll Ave.
Houston, Texas 77026
(713) 426-2000
NAVAL ARCHITECT

SAR

SHEET SIZE: 12 X 18
SCALE AS NOTED

BID SET
NOT FOR CONSTRUCTION

RAIL ARTBOARD
SAMPLE 3
L-SERIES

R-18

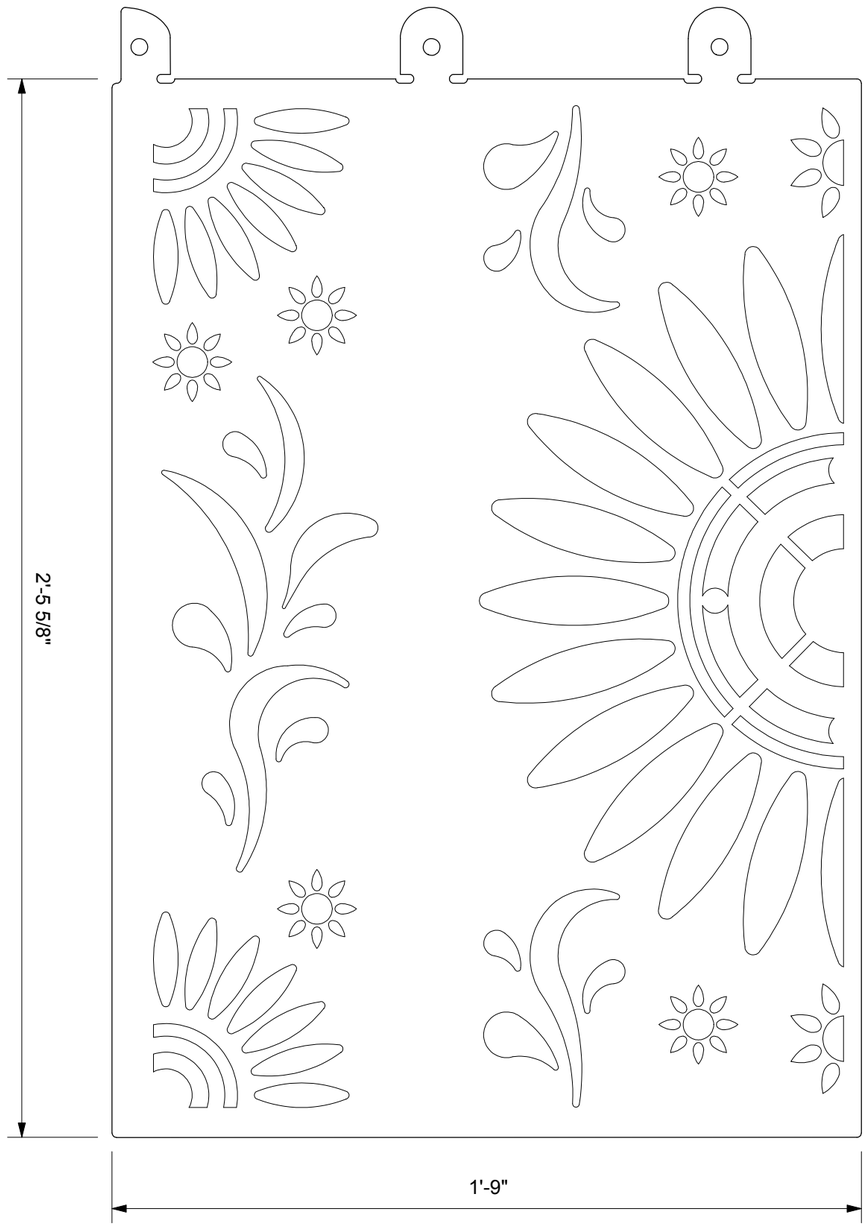

2 SETS OF DOORS (MIRRORED, SHOWN FOR REFERENCE ONLY)

MATERIAL: 1/8" ALUMINUM 5052 WATERJET CUT, DEBURR, PAINT FINISH ONCE ASSEMBLED (SEE COLOR INDEX)

1 RAIL SAMPLE (D-SERIES) 1:4

NOTE: ALL CUT FILES TO BE SUPPLIED TO WINNING BIDDER
NOTE: MUST BE COMPLETED TO THE SATISFACTION OF METALAB STUDIO (SEE SPECS)

NO.	ISSUE	DATE
1	BID SET	2 August 2016

SAN ANTONIO RIVERBOATS
PROTOTYPE

[METALAB ARCHITECTURE]
20 N Sampson St
Houston, Texas 77003
713.426.3640
www.metalabstudio.com
info@metalabstudio.com
ARCHITECT

Gensler Texas, Design
Architects, Inc.
3005 Carol Drive,
Kenner, Texas
Louisiana 70062
NAVAL ARCHITECT

SAR

SHEET SIZE: 12 X 18
SCALE AS NOTED

BID SET
NOT FOR CONSTRUCTION

RAIL ARTBOARD
SAMPLE 4
D-SERIES

R-19

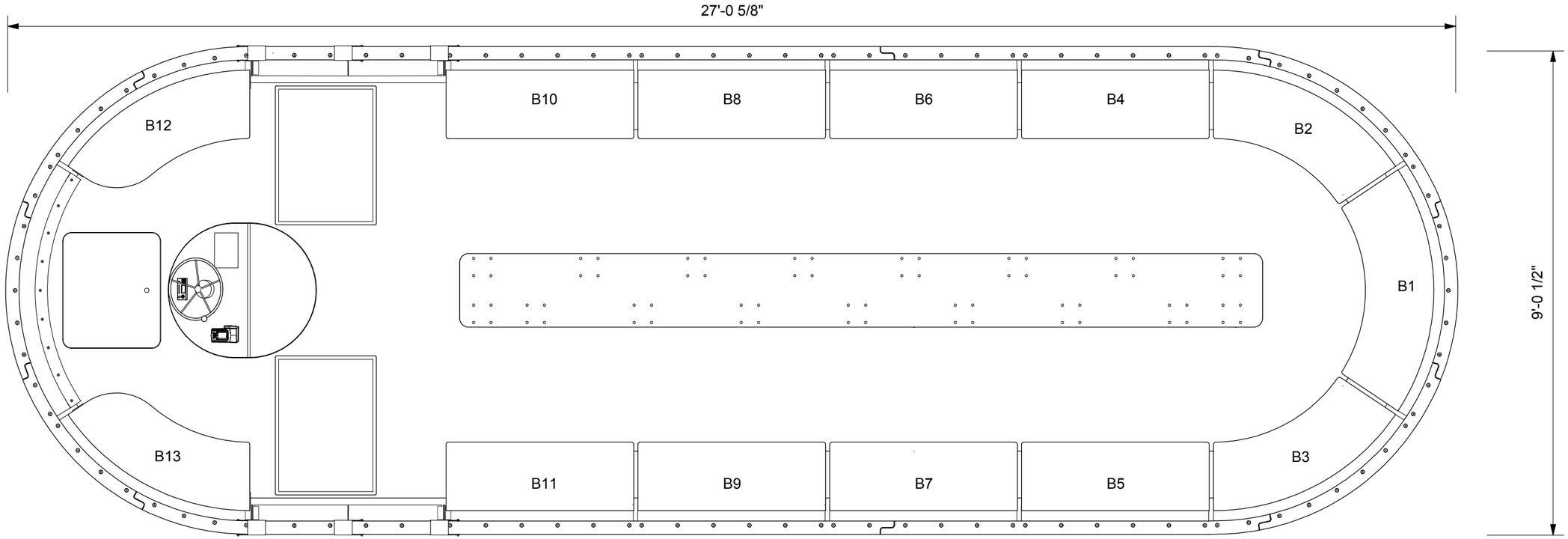

2 BENCH PLAN (TAXI SEATING) 1:24

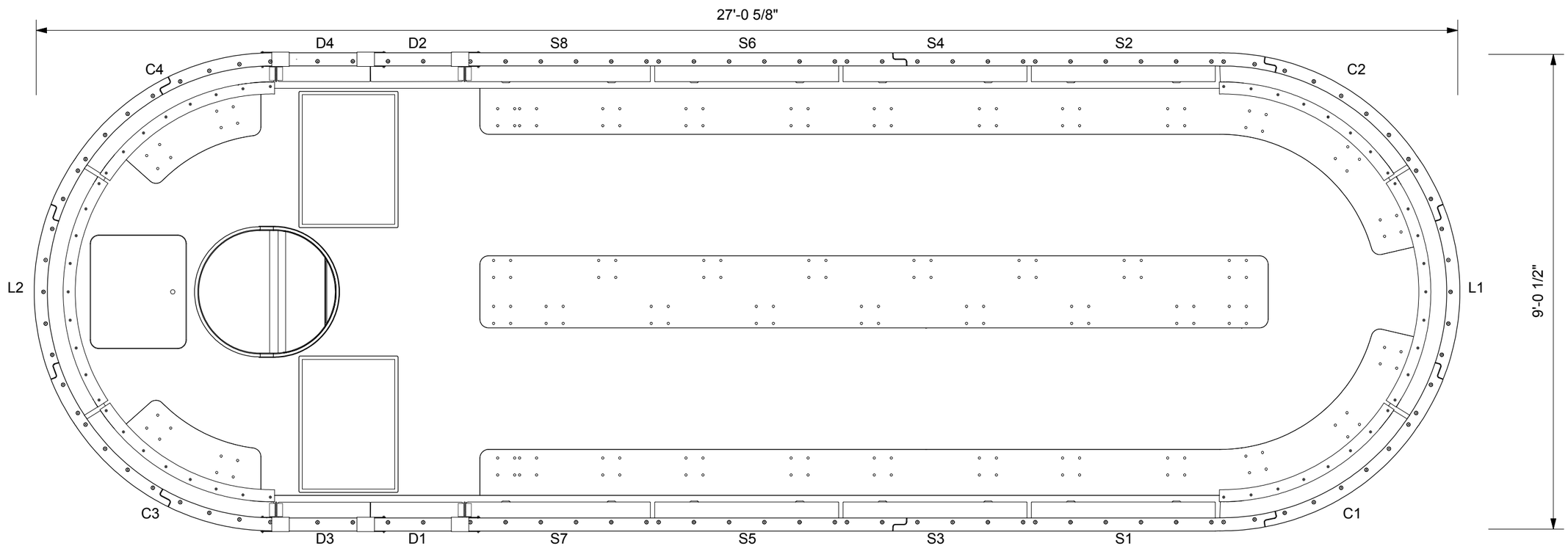

1 ACTIVITY PLAN (NO FIXED SEATING) 1:24

NOTE: MUST BE COMPLETED TO THE SATISFACTION OF METALAB STUDIO (SEE SPECS)

NO.	ISSUE	DATE
1	BID SET	2 August 2016

SAN ANTONIO RIVERBOATS
PROTOTYPE

[METALAB ARCHITECTURE]
20 N Sampson St
Houston, Texas 77003
713.426.3640
www.metalabstudio.com
info@metalabstudio.com
ARCHITECT

Gonzo Naval Design
Gonzo Naval Design
3005 Canal Drive,
New Orleans, La.
Louisiana 70130
NAVAL ARCHITECT

SAR

BID SET
NOT FOR CONSTRUCTION

SHEET SIZE: 12 X 18
SCALE AS NOTED

SEATING CONFIGURATION TYPE 1 & 2

S-1

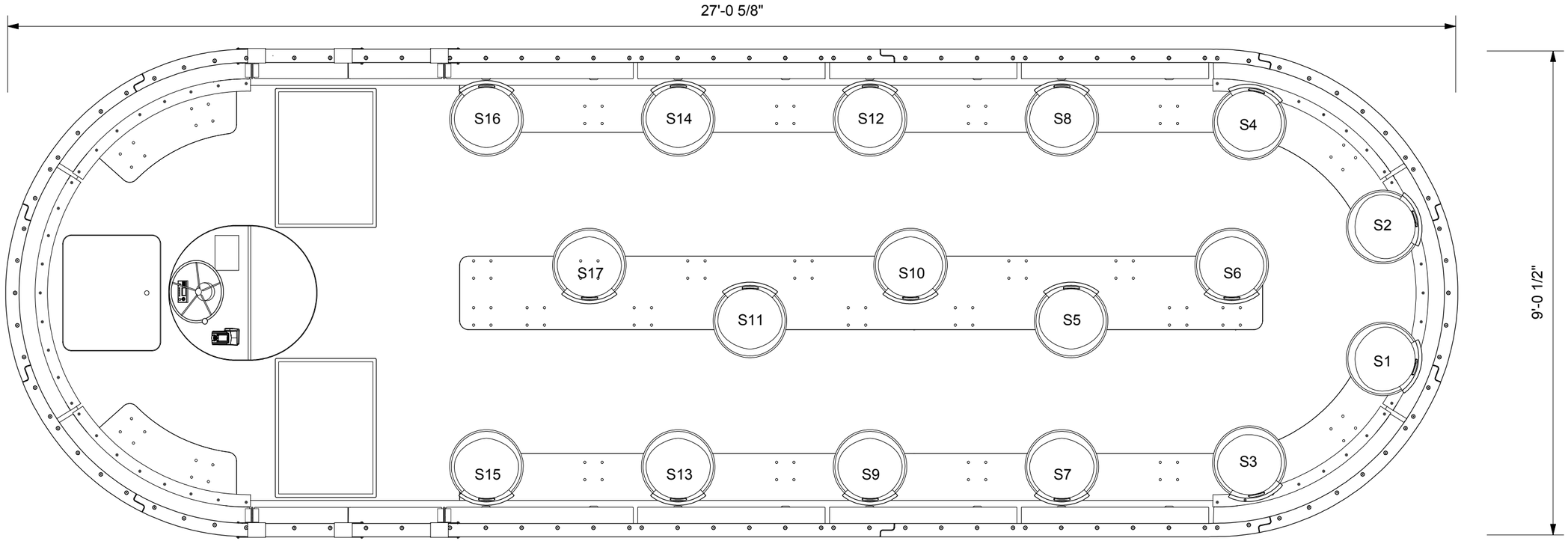

2 SEAT PLAN (360 TOUR SEATING) 1:24

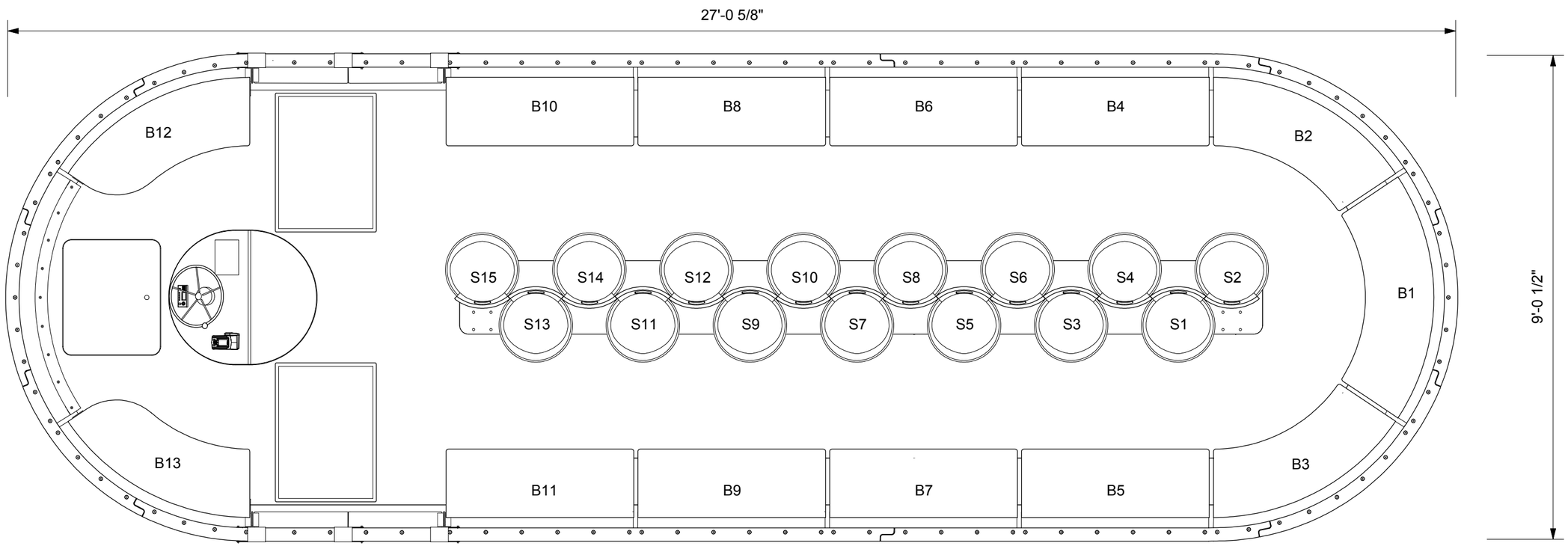

1 SEAT AND BENCH PLAN (TOUR SEATING) 1:24

NOTE: MUST BE COMPLETED TO THE SATISFACTION OF METALAB STUDIO (SEE SPECS)

NO.	ISSUE	DATE
1	BID SET	2 August 2016

SAN ANTONIO RIVERBOATS
PROTOTYPE

[METALAB ARCHITECTURE]
20 N Sampson St
Houston, Texas 77003
713.426.3640
www.metalabstudio.com
info@metalabstudio.com
ARCHITECT

Gensler Hotel, Design & Planning Group
3001 Carol Drive, Suite 100
Lawrence, KS 66049
NAVAL ARCHITECT

SAR

SHEET SIZE: 12 X 18
SCALE AS NOTED

BID SET
NOT FOR CONSTRUCTION

SEATING CONFIGURATION TYPE 3 & 4

S-2

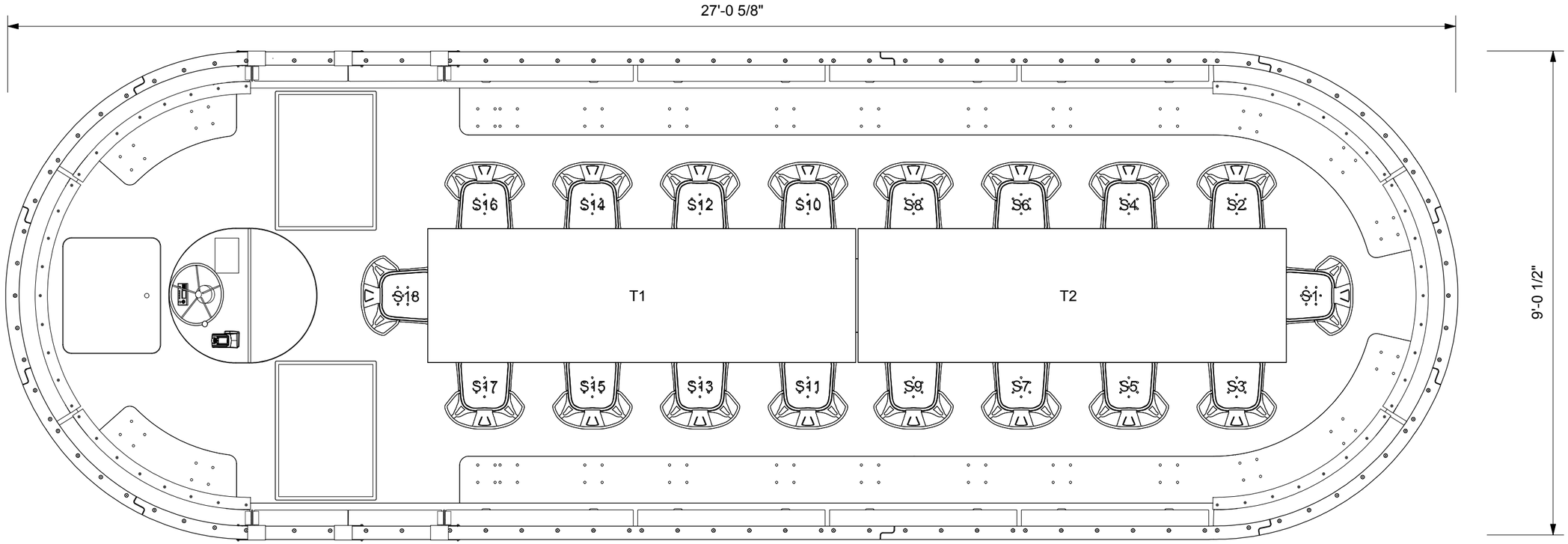

2 DINING PLAN (GROUP SEATING) 1:24

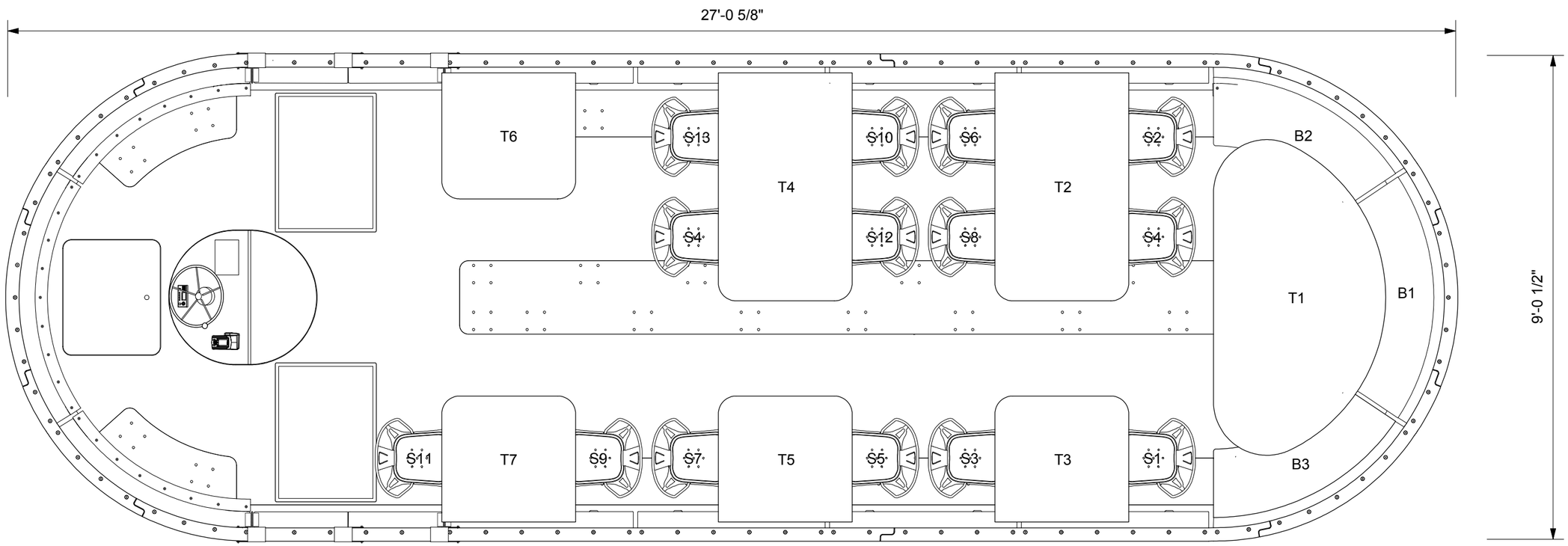

1 DINING PLAN (BISTRO SEATING) 1:24

NOTE: MUST BE COMPLETED TO THE SATISFACTION OF METALAB STUDIO (SEE SPECS)

NO.	ISSUE	DATE
1	BID SET	2 August 2016

SAN ANTONIO RIVERBOATS
PROTOTYPE

[METALAB ARCHITECTURE]
20 N Sampson St
Houston, Texas 77003
713.426.3640
www.metalabstudio.com
info@metalabstudio.com
ARCHITECT

Gensler Hotel, Design Architecture
3001 Carol Drive, Suite 100
Lawrence, KS 66049
NAVAL ARCHITECT

SAR

SHEET SIZE: 12 X 18
SCALE AS NOTED

BID SET
NOT FOR CONSTRUCTION

SEATING CONFIGURATION TYPE 5 & 6

S-3

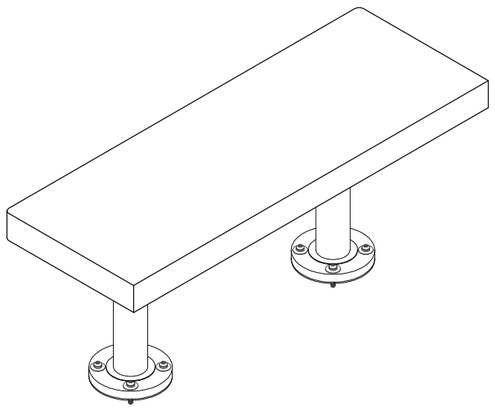

STRAIGHT BENCH X 8 (SEE S-6 AND S-8)
S-SERIES

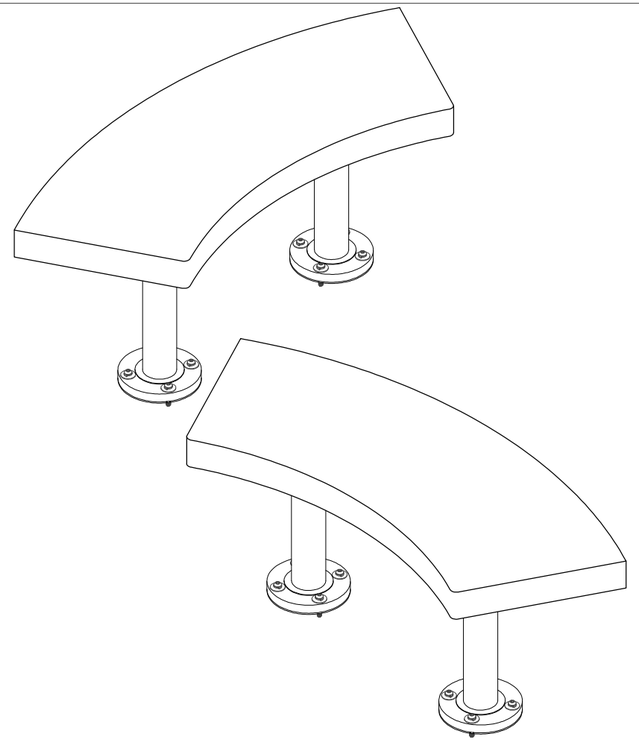

CURVED BENCH X 2 (SEE S-6 AND S-9)
C-SERIES

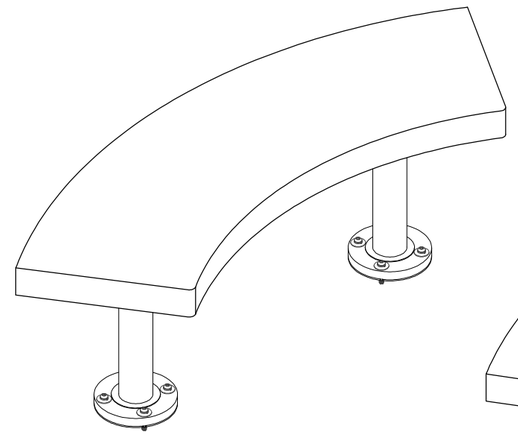

LONG CURVED BENCH X 1 (SEE S-7 AND S-10)
L-SERIES

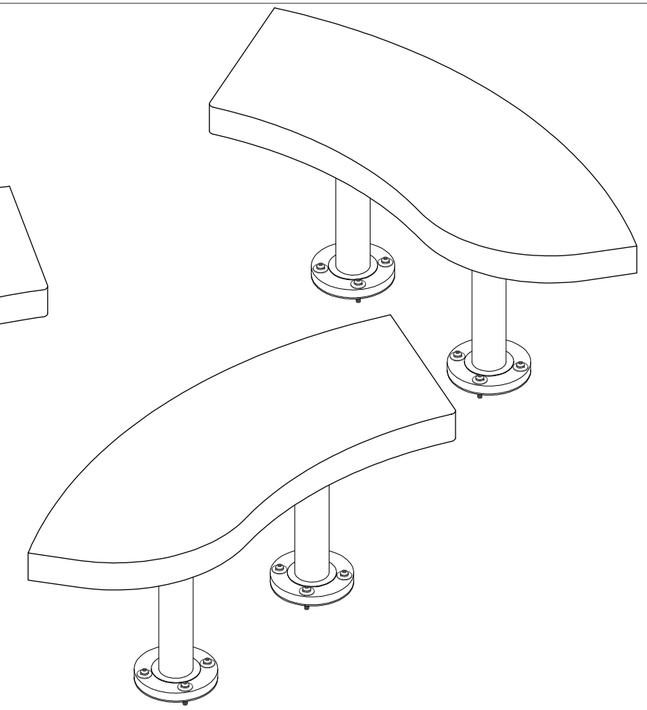

BACK CURVE BENCH X 2 (SEE S-7 AND S-11)
B-SERIES

2 BENCH SCHEDULE

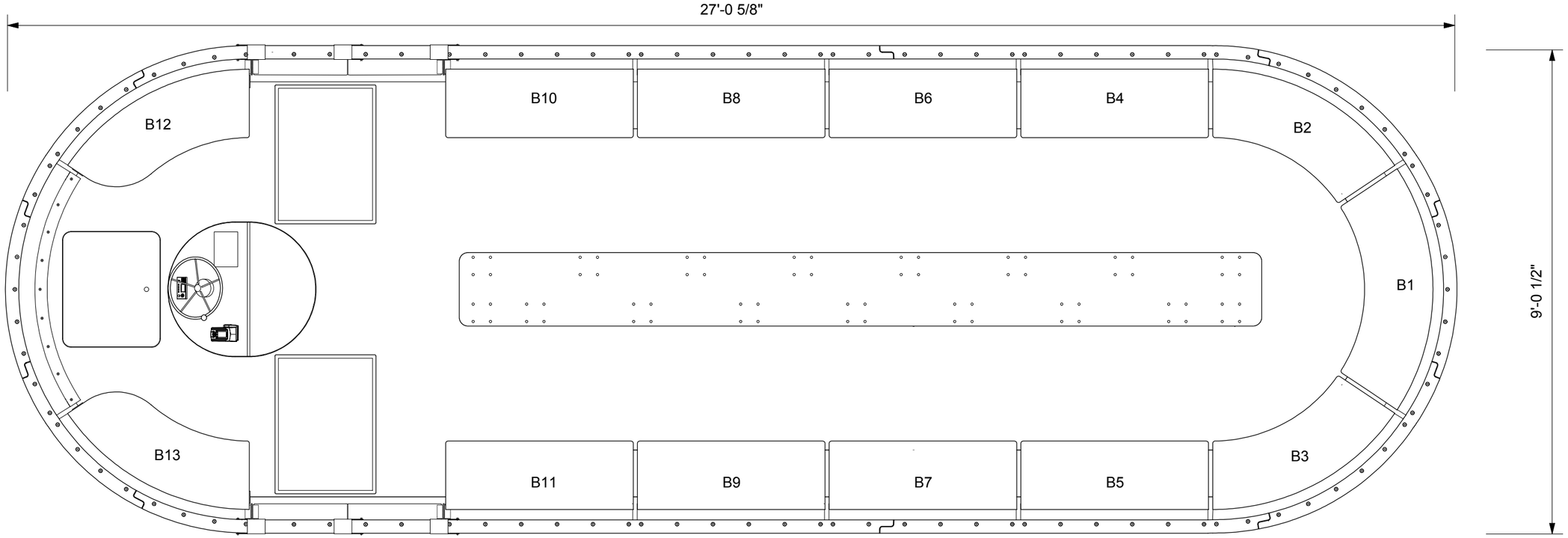

1 BENCH PLAN 1:24

NOTE: MUST BE COMPLETED TO THE SATISFACTION OF METALAB STUDIO (SEE SPECS)

NO.	ISSUE	DATE
1	BID SET	2 August 2016

SAN ANTONIO RIVERBOATS
PROTOTYPE

[METALAB ARCHITECTURE]
20 N Sampson St
Houston, Texas 77003
713.426.3640
www.metalabstudio.com
info@metalabstudio.com
ARCHITECT

Gensler Texas, Design Architects, Inc.
3001 Caruth Drive,
Plano, Texas 75075
Louisiana 70130
NAVAL ARCHITECT

SAR

SHEET SIZE: 12 X 18
SCALE AS NOTED

BID SET
NOT FOR CONSTRUCTION

BENCH PLAN
AND SCHEDULE

S-4

BENCH HARDWARE SCHEDULE

DRAWING	DESCRIPTION	# PER STRAIGHT BENCH	# PER CURVE BENCH	# PER LONG BENCH	# PER BACK BENCH	TOTAL
	Barbed Inserts for Softwood Open End Flanged 1/4"-20 Length 0.512" 90267A697	13	13	20	10	170
	18-8 Stainless Steel Flat Washer 1/4" 0.625" OD 92141A029	13	13	20	10	170
	18-8 Stainless Steel Split Lock Washer 1/4" 0.487" OD 92146A029	13	13	20	10	170
	18-8 Stainless Steel Button Head Socket Cap Screw 1/4"-20, 1 1/4" Length 92949A544	13	13	20	10	170

ITEMS FOR BENCH ASSEMBLY

NOTE: USE IRONTITE OR EQUAL ON ALL STAINLESS FASTENERS TO PREVENT SEIZING AND GALLING

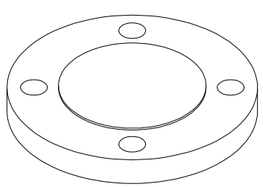

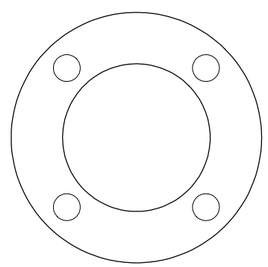

ITEM: 2 1/2" Bolt Circle Blind Flange or Waterjet Equivalent
MATERIAL: Aluminum 5052 with Painted Finish See Color Index
AMT: 2 per Bench (26 Total)
See S-6 for more information about assembly

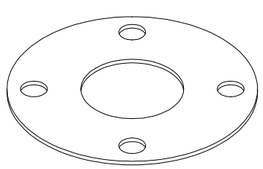

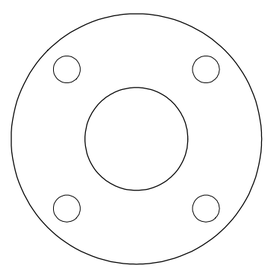

ITEM: Compressible Buna-N Flange Gasket 2 1/2" Pipe 1/8" Thick or Waterjet Equivalent
MATERIAL: Aluminum 5052
AMT: 2 per Bench (26 Total)
See S-6 for more information about assembly

1 BENCH HARDWARE SCHEDULE

ITEMS FOR BENCH ASSEMBLY (CONT.)

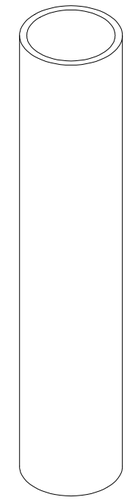

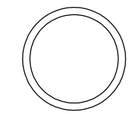

ITEM: 2 1/2" Pipe 1' 2 3/4" Long
MATERIAL: Aluminum 5052 with Painted Finish See Color Index
AMT: 2 per Bench (26 Total)
See S-6 for more information about assembly

2 BENCH DETAILS

NO.	ISSUE	DATE
1	BID SET	2 August 2016

SAN ANTONIO RIVERBOATS
PROTOTYPE

[METALAB ARCHITECTURE]
20 N Sampson St
Houston, Texas 77003
713.426.3640
www.metalabstudio.com
info@metalabstudio.com
ARCHITECT

Gensler Texas, Design Architects, LLP
3005 Carol Drive, Kingsville, Texas 78363
(361) 592-7000
NAVAL ARCHITECT

SAR

SHEET SIZE: 12 X 18
SCALE AS NOTED

BID SET
NOT FOR CONSTRUCTION

BENCH HARDWARE SCHEDULE AND BENCH DETAILS

S-5

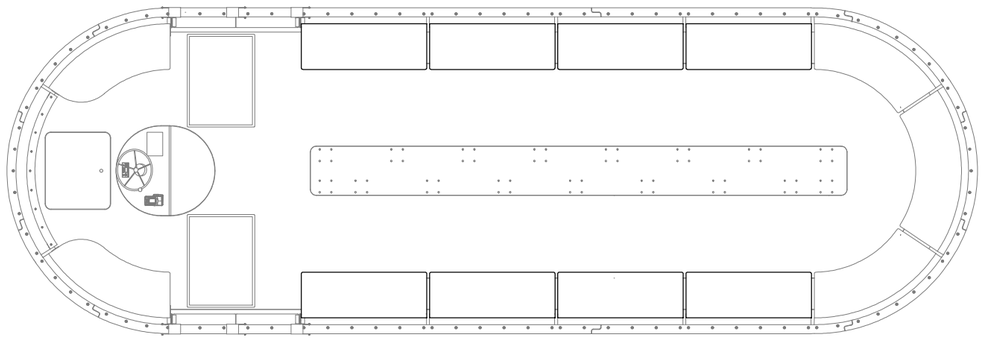

STRAIGHT BENCH X 8 (SEE S-8)
S-SERIES

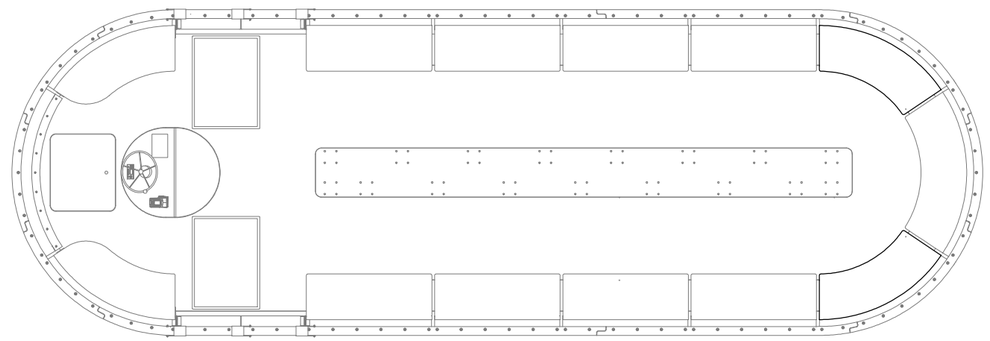

CURVED BENCH LEFT AND RIGHT (SEE S-9)
C-SERIES

2 BENCH POST PLAN REFERENCES 1:48

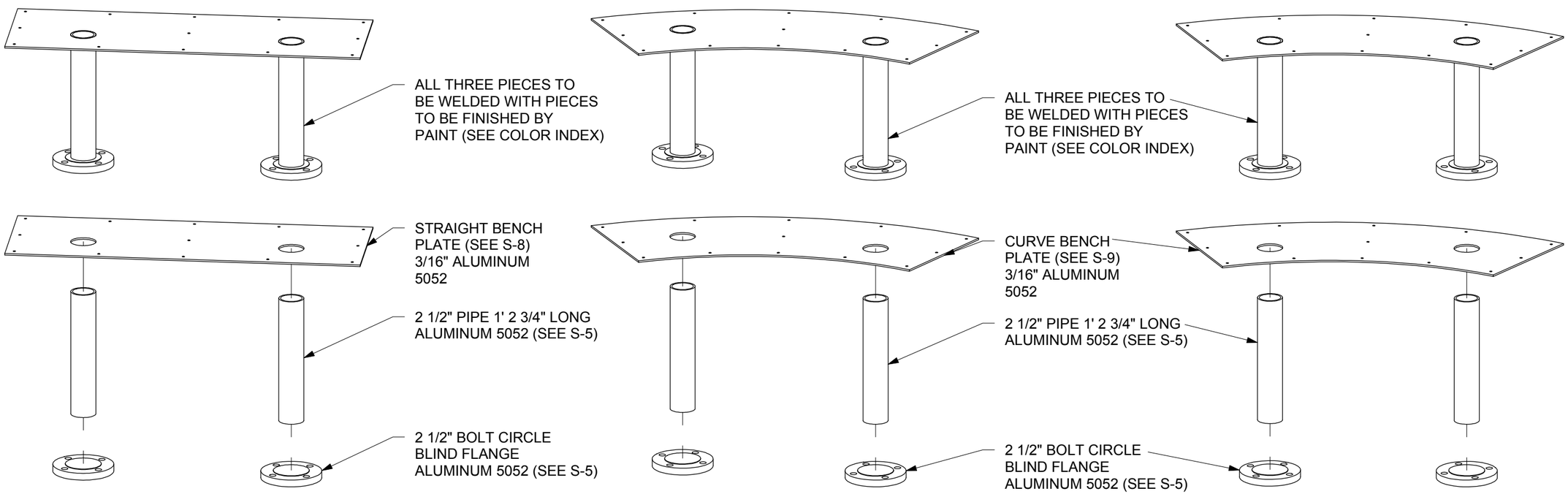

STRAIGHT BENCH X 8 (SEE S-8)
S-SERIES

CURVED BENCH LEFT (SEE S-9)
C-SERIES

CURVED BENCH RIGHT (SEE S-9)
C-SERIES

1 BENCH POST ASSEMBLY DRAWINGS

NOTE: ALL CUT FILES TO BE SUPPLIED TO WINNING BIDDER
NOTE: MUST BE COMPLETED TO THE SATISFACTION OF METALAB STUDIO (SEE SPECS)

NO.	ISSUE	DATE
1	BID SET	2 August 2016

SAN ANTONIO RIVERBOATS
PROTOTYPE

[METALAB ARCHITECTURE]
20 N Sampson St
Houston, Texas 77003
713.426.3640
www.metalabstudio.com
info@metalabstudio.com
ARCHITECT

Gunda Maritime Design
Consultants, Inc.
3005 Canal Drive,
New Orleans, La.
Louisiana 70130
NAVAL ARCHITECT

SAR

SHEET SIZE: 12 X 18
SCALE AS NOTED

BID SET
NOT FOR CONSTRUCTION

BENCH POST ASSEMBLY DRAWINGS 1

S-6

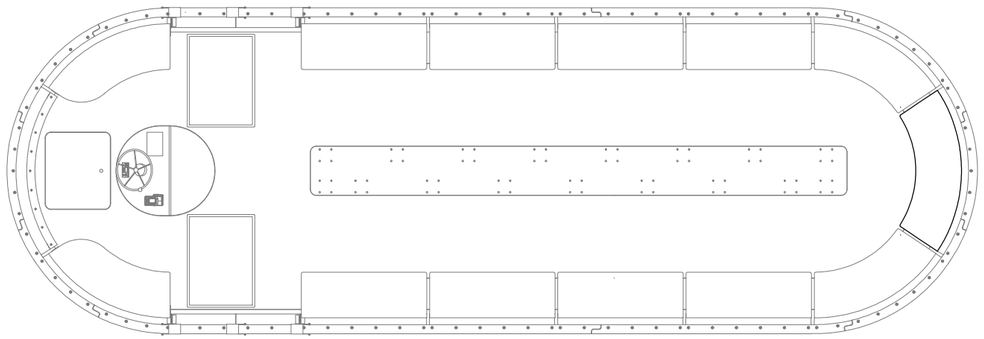

LONG BENCH X 1 (SEE S-10)
L-SERIES

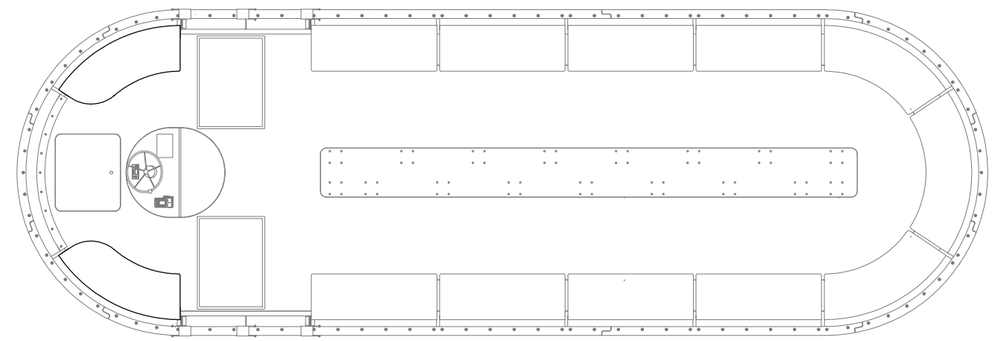

BACK BENCH LEFT AND RIGHT (SEE S-11)
B-SERIES

2 BENCH POST PLAN REFERENCES 1:48

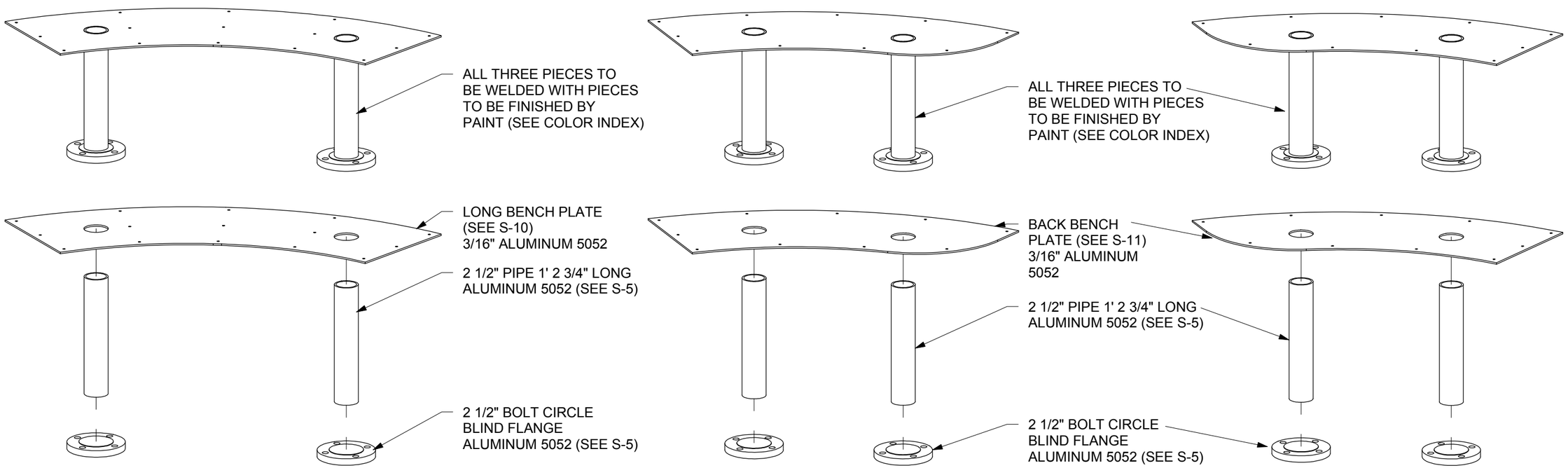

LONG BENCH X 1 (SEE S-10)
L-SERIES

BACK BENCH LEFT (SEE S-11)
B-SERIES

BACK BENCH RIGHT (SEE S-11)
B-SERIES

1 BENCH POST ASSEMBLY DRAWINGS

NOTE: ALL CUT FILES TO BE SUPPLIED TO WINNING BIDDER
NOTE: MUST BE COMPLETED TO THE SATISFACTION OF METALAB STUDIO (SEE SPECS)

NO.	ISSUE	DATE
1	BID SET	2 August 2016

SAN ANTONIO RIVERBOATS
PROTOTYPE

[METALAB ARCHITECTURE]
20 N Sampson St
Houston, Texas 77003
713.426.3640
www.metalabstudio.com
info@metalabstudio.com
ARCHITECT

Gregg Adams Design
Naval Architecture
3005 Canal Drive,
New Orleans, La.
Louisiana 70130
NAVAL ARCHITECT

SAR

SHEET SIZE: 12 X 18
SCALE AS NOTED

BID SET
NOT FOR CONSTRUCTION

BENCH POST ASSEMBLY DRAWINGS 2

S-7

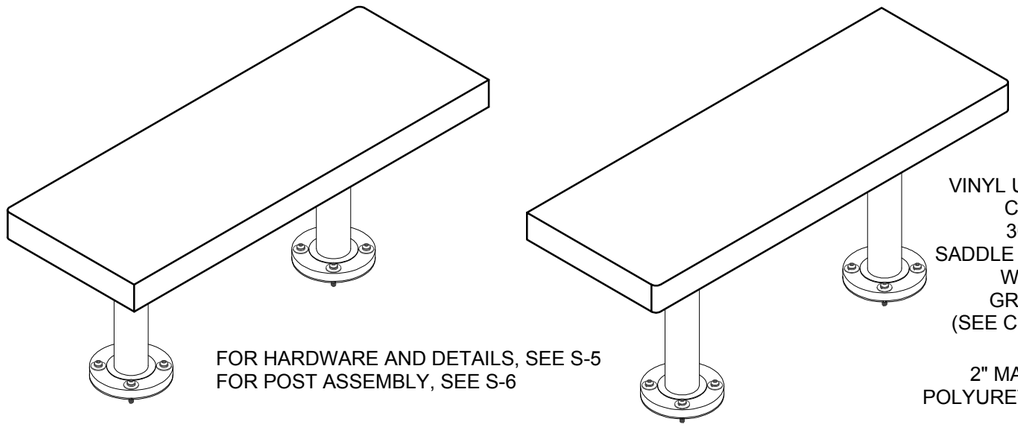

FOR HARDWARE AND DETAILS, SEE S-5
FOR POST ASSEMBLY, SEE S-6

2 BENCH ASSEMBLY (S-SERIES) 1:12

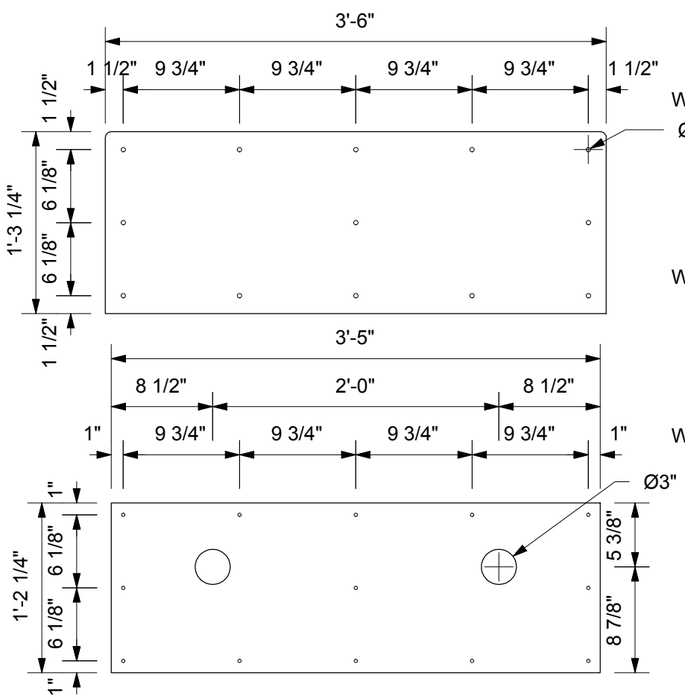

MATERIAL:
3/4" MARINE GRADE
PLYWOOD

MATERIAL:
3/16" ALUMINUM 5052
AFTER ASSEMBLED,
FINISHED WITH
PAINT (SEE S-6 AND
SEE COLOR INDEX)

1 BENCH PIECES (S-SERIES) 1:12

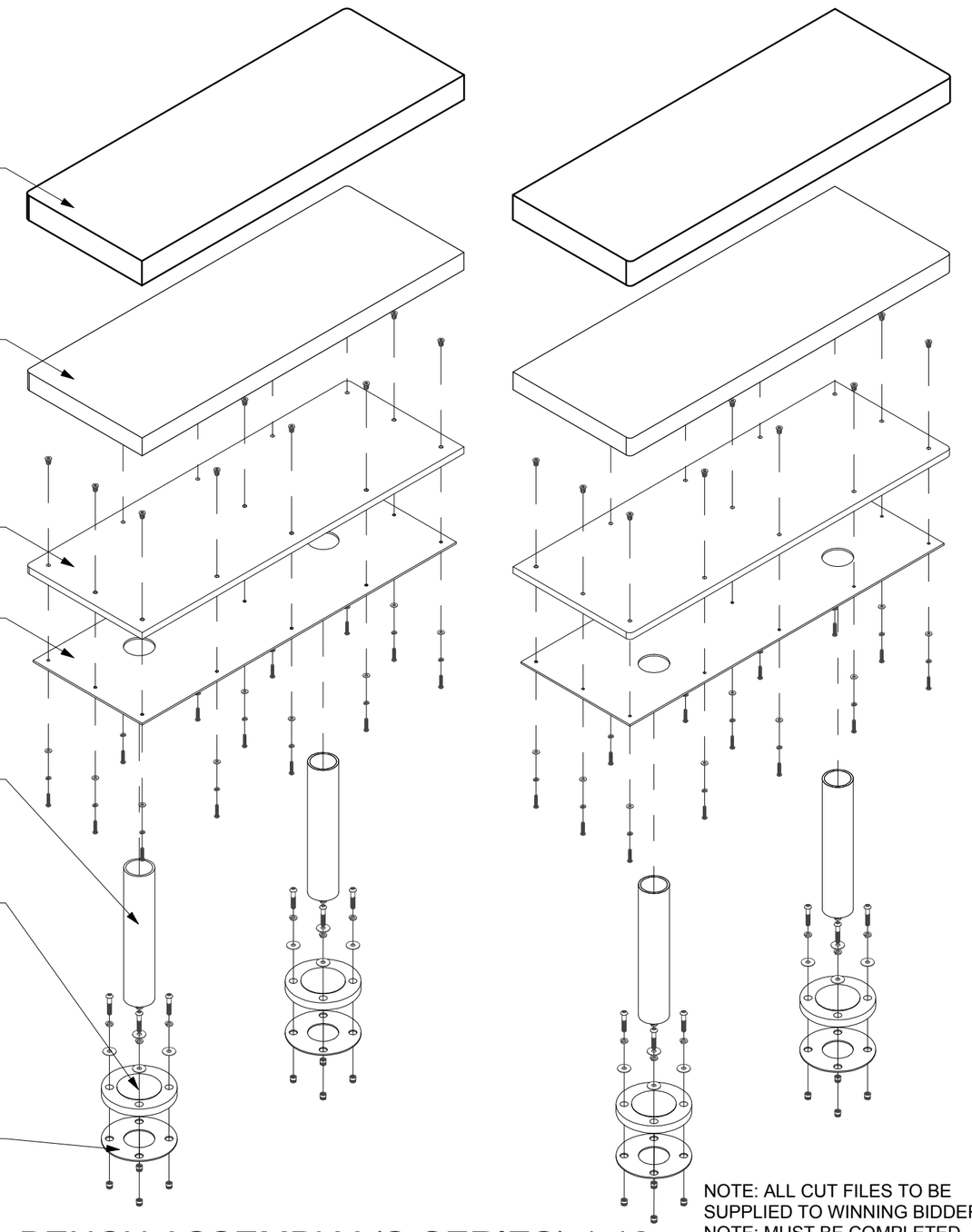

3 BENCH ASSEMBLY (S-SERIES) 1:12

NOTE: ALL CUT FILES TO BE
SUPPLIED TO WINNING BIDDER
NOTE: MUST BE COMPLETED
TO THE SATISFACTION OF
METALAB STUDIO (SEE SPECS)

NO.	ISSUE	DATE
1	BID SET	2 August 2016

SAN ANTONIO RIVERBOATS
PROTOTYPE

[METALAB ARCHITECTURE]
20 N Sampson St
Houston, Texas 77003
713.426.3640
www.metalabstudio.com
info@metalabstudio.com
ARCHITECT

Gregg Adams Design
Naval Architecture
3005 Canal Drive,
Port Aransas, Tx
Louisiana 70130
NAVAL ARCHITECT

SAR

BID SET
NOT FOR CONSTRUCTION

SHEET SIZE: 12 X 18
SCALE AS NOTED

BENCH
ASSEMBLY
DRAWINGS 1
S-SERIES

S-8

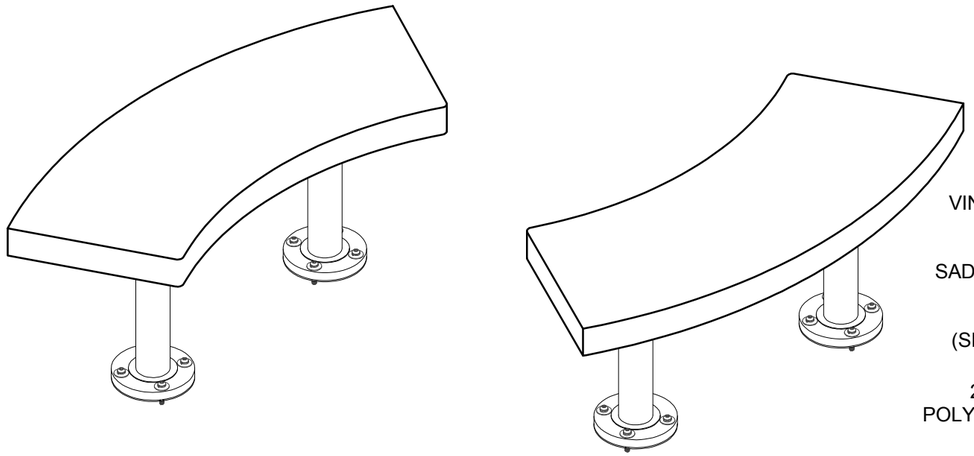

FOR HARDWARE AND DETAILS, SEE S-5
FOR POST ASSEMBLY, SEE S-6

FOR C-SERIES, ALL FABRICATION PARTS
ARE THE SAME BUT ASSEMBLY IS MIRRORED
BETWEEN LEFT AND RIGHT PER S-6

2 BENCH ASSEMBLY (C-SERIES) 1:12

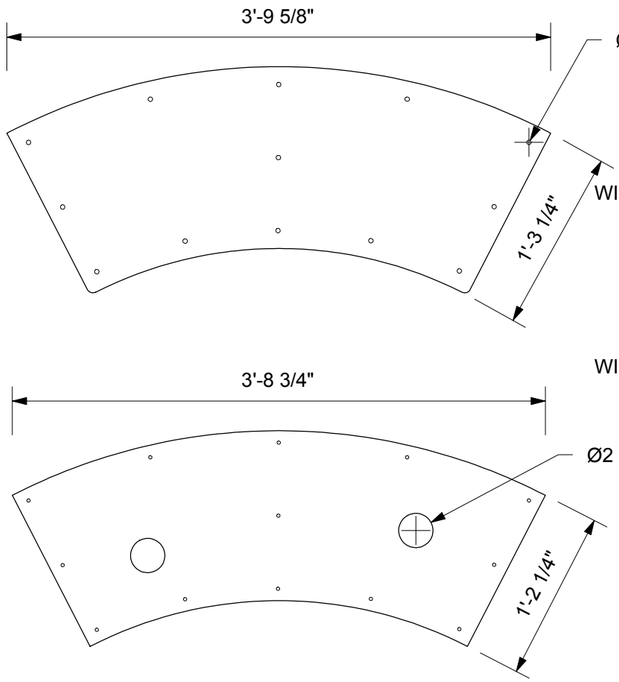

MATERIAL:
3/4" MARINE GRADE
PLYWOOD

MATERIAL:
3/16" ALUMINUM 5052
AFTER ASSEMBLED,
FINISHED WITH
PAINT (SEE S-6 AND
SEE COLOR INDEX)

1 BENCH PIECES (C-SERIES) 1:12

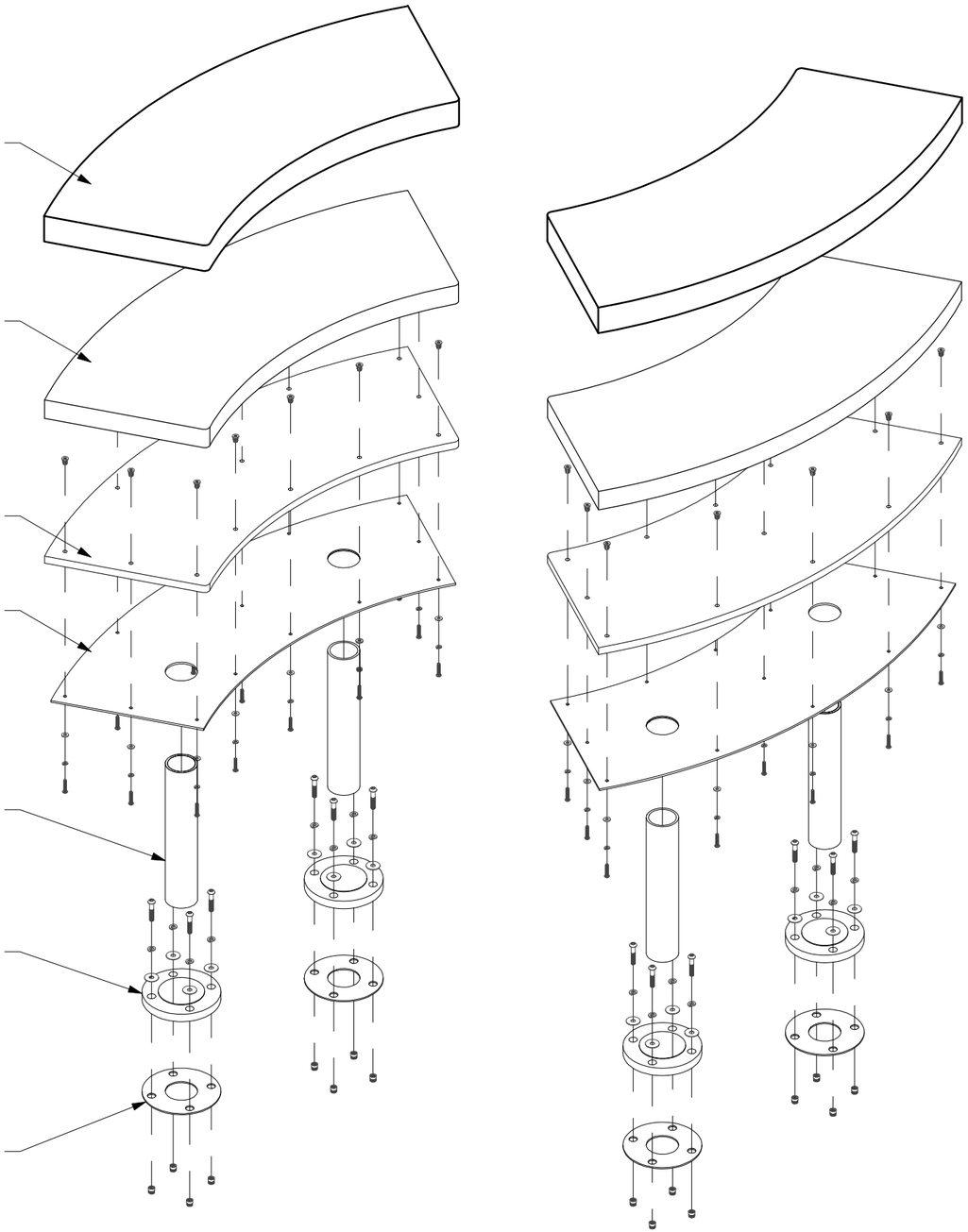

3 BENCH ASSEMBLY (C-SERIES) 1:12

NOTE: ALL CUT FILES TO BE
SUPPLIED TO WINNING BIDDER
NOTE: MUST BE COMPLETED
TO THE SATISFACTION OF
METALAB STUDIO (SEE SPECS)

NO.	ISSUE	DATE
1	BID SET	2 August 2016

SAN ANTONIO RIVERBOATS
PROTOTYPE

[METALAB ARCHITECTURE]
20 N Sampson St
Houston, Texas 77003
713.426.3640
www.metalabstudio.com
info@metalabstudio.com
ARCHITECT

Gensler Houston, Design
Architects, Inc.
3001 Caroll Drive,
Suite 1000, Houston, Texas
Louisiana 70130
NAVAL ARCHITECT

SAR

SHEET SIZE: 12 X 18
SCALE AS NOTED

BID SET
NOT FOR CONSTRUCTION

BENCH
ASSEMBLY
DRAWINGS 2
C-SERIES

S-9

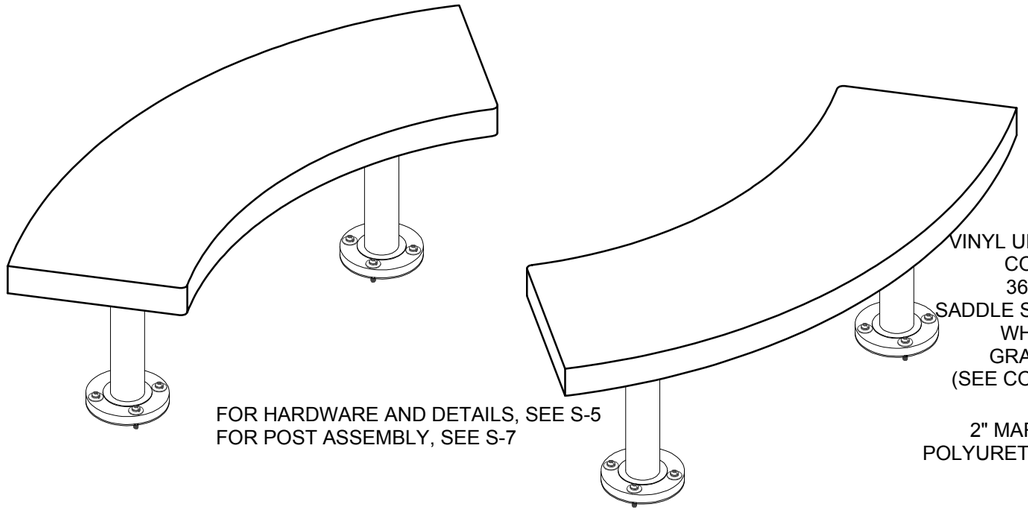

FOR HARDWARE AND DETAILS, SEE S-5
FOR POST ASSEMBLY, SEE S-7

2 BENCH ASSEMBLY (L-SERIES) 1:12

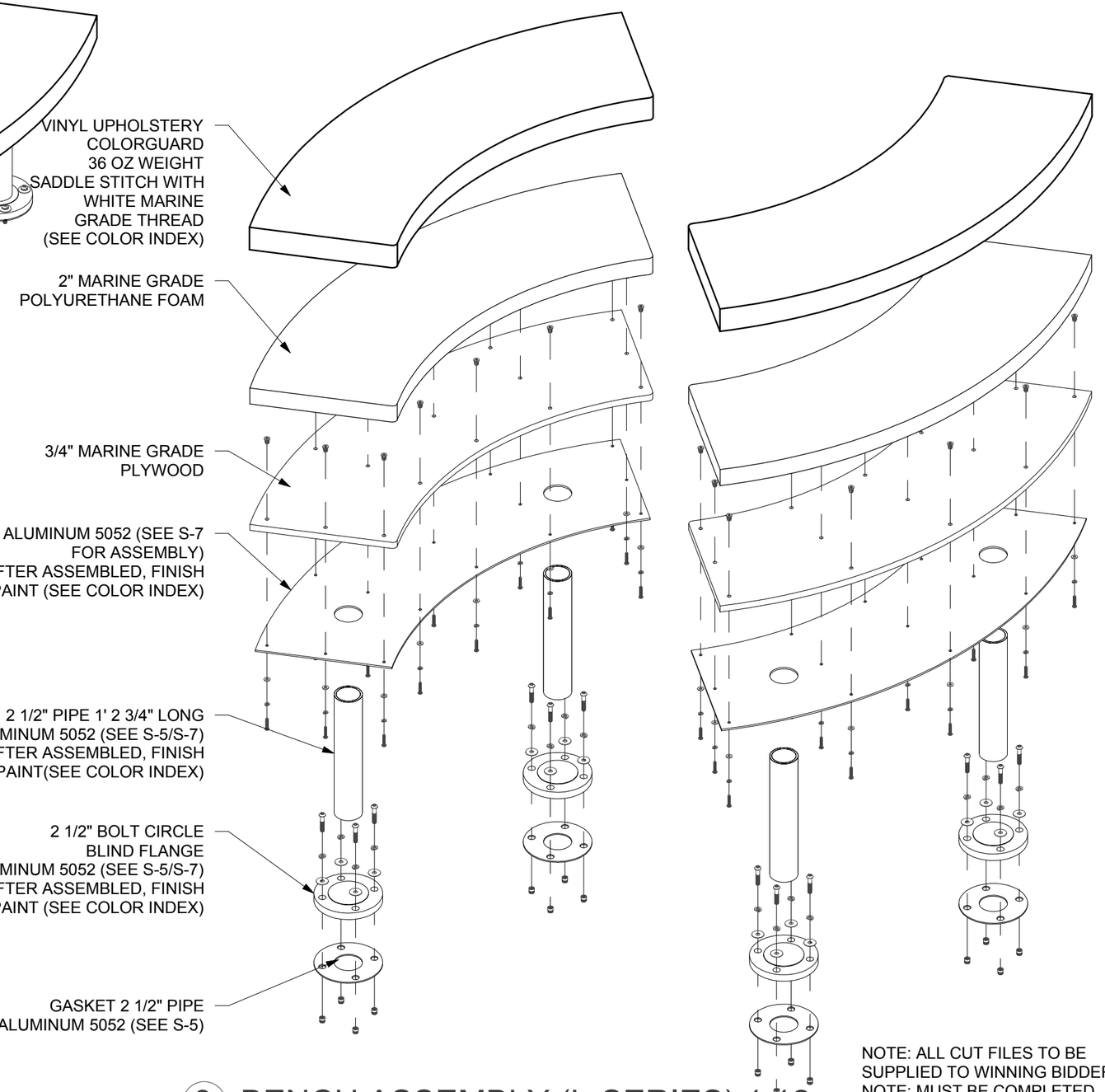

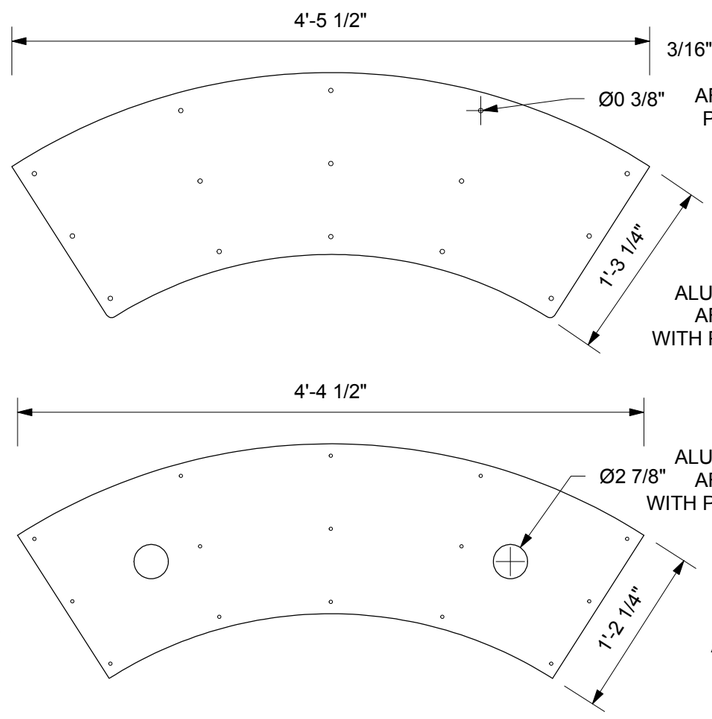

MATERIAL:
3/4" MARINE GRADE
PLYWOOD

MATERIAL:
3/16" ALUMINUM 5052
AFTER ASSEMBLED,
FINISHED WITH
PAINT (SEE S-7 AND SEE
COLOR INDEX)

1 BENCH PIECES (L-SERIES) 1:12

3 BENCH ASSEMBLY (L-SERIES) 1:12

NOTE: ALL CUT FILES TO BE
SUPPLIED TO WINNING BIDDER
NOTE: MUST BE COMPLETED
TO THE SATISFACTION OF
METALAB STUDIO (SEE SPECS)

NO.	ISSUE	DATE
1	BID SET	2 August 2016

SAN ANTONIO RIVERBOATS
PROTOTYPE

[METALAB ARCHITECTURE]
20 N Sampson St
Houston, Texas 77003
713.426.3640
www.metalabstudio.com
info@metalabstudio.com
ARCHITECT

Gensler Texas, Design
Architects, LLC
3005 Carol Drive,
Kingwood, Texas
77339
(Authorized Office)
NAVAL ARCHITECT

SAR

SHEET SIZE: 12 X 18
SCALE AS NOTED

BID SET
NOT FOR CONSTRUCTION

BENCH
ASSEMBLY
DRAWINGS 3
L-SERIES

S-10

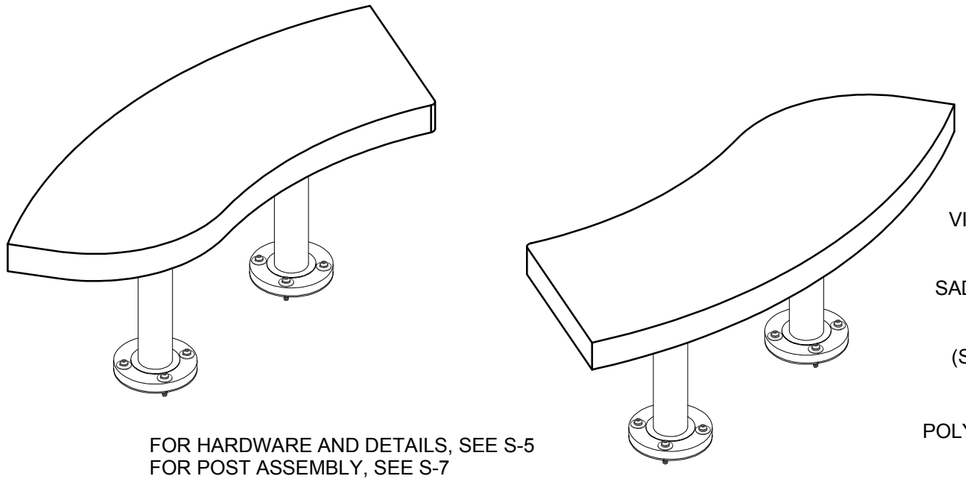

FOR HARDWARE AND DETAILS, SEE S-5
FOR POST ASSEMBLY, SEE S-7

FOR C-SERIES, ALL FABRICATION PARTS
ARE THE SAME BUT ASSEMBLY IS MIRRORED
BETWEEN LEFT AND RIGHT PER S-7

2 BENCH ASSEMBLY (B-SERIES) 1:12

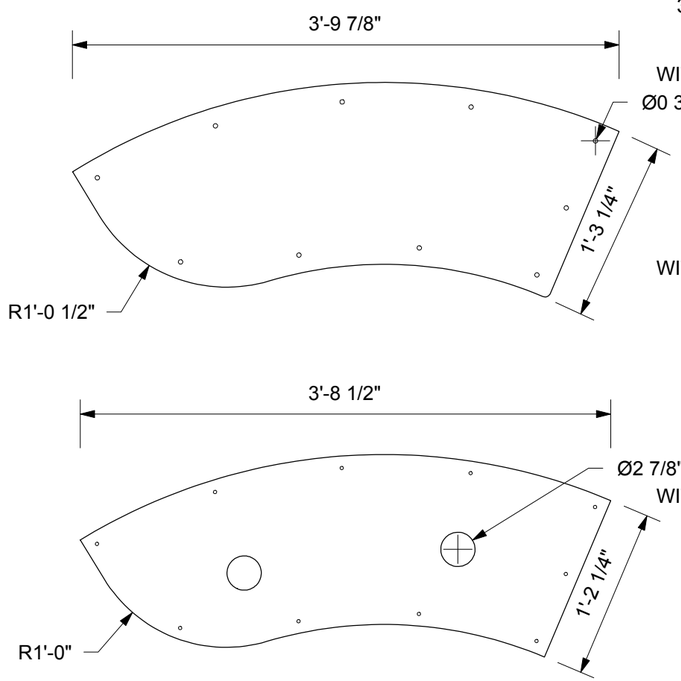

MATERIAL:
3/4" MARINE GRADE
PLYWOOD

MATERIAL:
3/16" ALUMINUM 5052
AFTER ASSEMBLED,
FINISHED WITH
PAINT (SEE S-7 AND
SEE COLOR INDEX)

1 BENCH PIECES (B-SERIES) 1:12

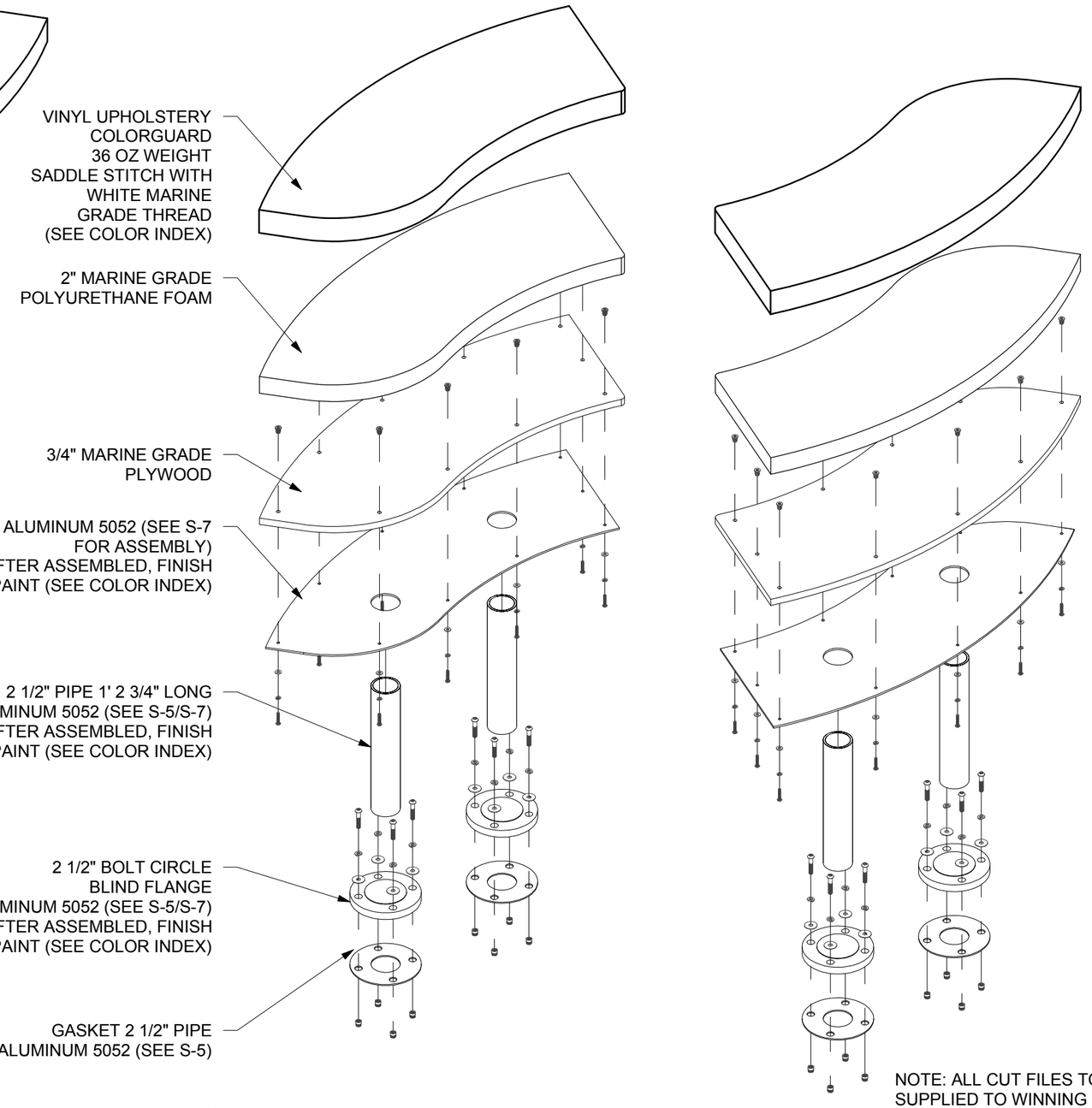

3 BENCH ASSEMBLY (B-SERIES) 1:12

NOTE: ALL CUT FILES TO BE
SUPPLIED TO WINNING BIDDER
NOTE: MUST BE COMPLETED
TO THE SATISFACTION OF
METALAB STUDIO (SEE SPECS)

NO.	ISSUE	DATE
1	BID SET	2 August 2016

SAN ANTONIO RIVERBOATS
PROTOTYPE

[METALAB ARCHITECTURE]
20 N Sampson St
Houston, Texas 77003
713.426.3640
www.metalabstudio.com
info@metalabstudio.com
ARCHITECT

Gensler Texas, Design
Gensler Texas, Inc.
Architects
3005 Cleburne
Houston, Texas 77004
713.520.1750
NAVAL ARCHITECT

SAR

SHEET SIZE: 12 X 18
SCALE AS NOTED

BID SET
NOT FOR CONSTRUCTION

BENCH
ASSEMBLY
DRAWINGS 4
B-SERIES

S-11

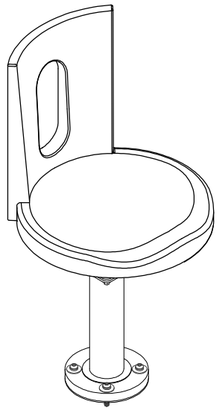

SEAT X 15 FOR GROUP TOUR (SEE S-14)
SEAT X 17 FOR 360 TOUR (SEE S-14)

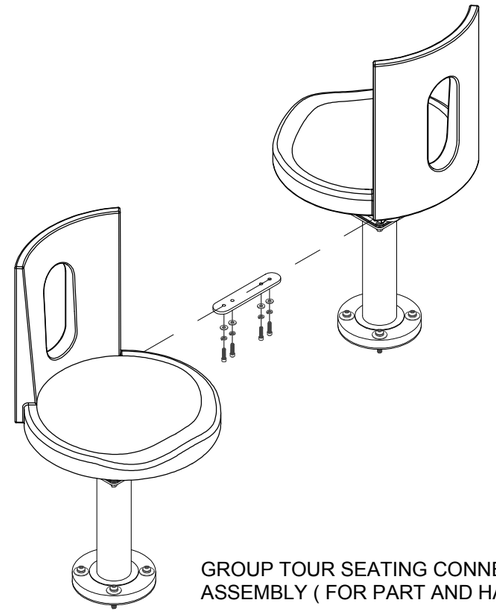

GROUP TOUR SEATING CONNECTION
ASSEMBLY (FOR PART AND HARDWARE, SEE S-13)

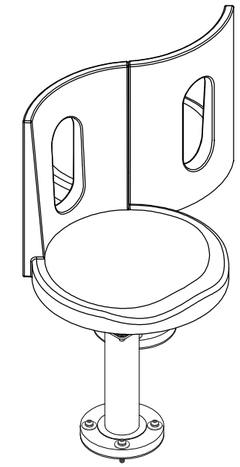

GROUP TOUR SHOWING
SEATING CONNECTED

2 SEAT SCHEDULE AND ATTACHMENT

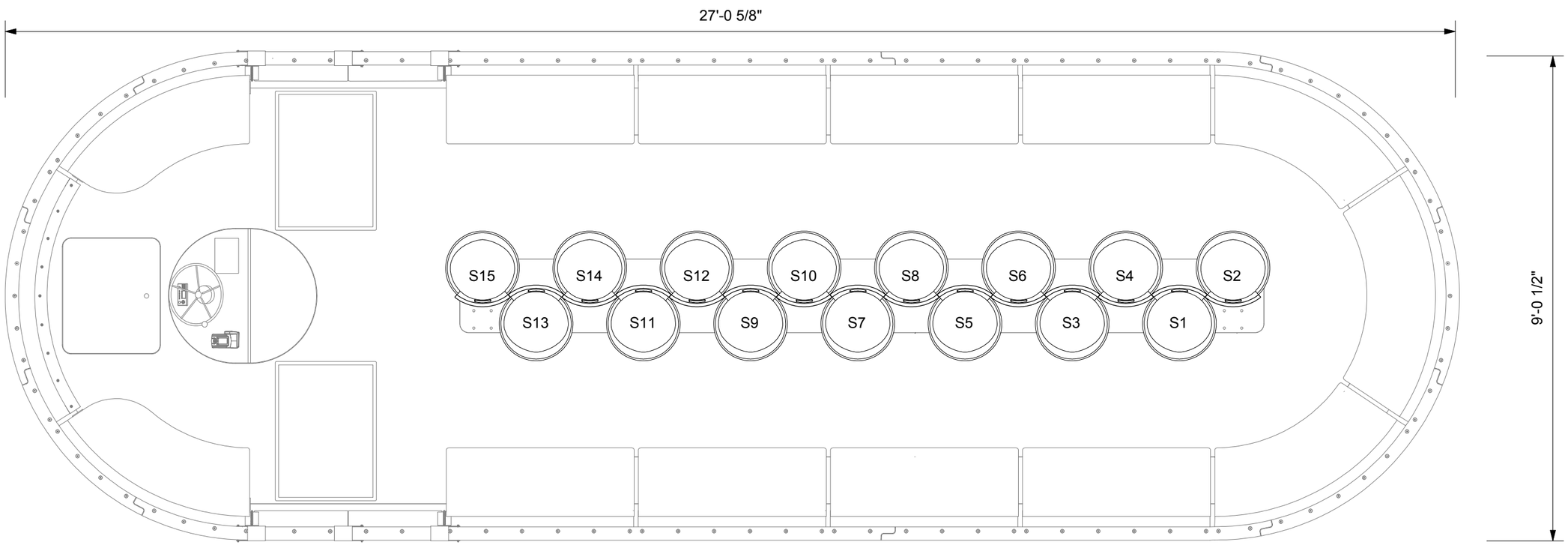

1 SEAT PLAN (TOUR) 1:24

NOTE: MUST BE COMPLETED TO THE SATISFACTION OF METALAB STUDIO (SEE SPECS)

NO.	ISSUE	DATE
1	BID SET	3 August 2016

SAN ANTONIO RIVERBOATS
PROTOTYPE

[METALAB ARCHITECTURE]
20 N Sampson St
Houston, Texas 77003
713.426.3640
www.metalabstudio.com
info@metalabstudio.com
ARCHITECT

Group Naval Design
Architecture, Inc.
3005 Canal Drive,
New Orleans, La
Louisiana 70130
NAVAL ARCHITECT

SAR

SHEET SIZE: 12 X 18
SCALE AS NOTED

BID SET
NOT FOR CONSTRUCTION

CHAIR PLAN
AND SCHEDULE

S-12

CHAIR HARDWARE SCHEDULE

DRAWING	DESCRIPTION	# PER TOUR CHAIR	# PER TOUR LINK	# PER 360 CHAIR	TOTAL TOUR	TOTAL 360
	18-8 Stainless Steel Head Socket Cap Screw 1/4"-20, 1" Length 92196A542	4	4	4	116	68
	18-8 Stainless Steel Flat Washer 1/4" 0.625" OD 92141A029	12	4	12	236	204
	18-8 Stainless Steel Split Lock Washer 1/4" 0.487" OD 92146A029	8	4	8	176	136
	18-8 Stainless Steel Head Socket Cap Screw 1/4"-20, 3/4" Length 92196A540	4	0	4	60	68
	18-8 Stainless Steel Nylon Insert Locknut 1/4"-20 5/16" High 91831A029	4	0	4	60	68

ITEMS FOR CHAIR ASSEMBLY

NOTE: USE IRONTITE OR EQUAL ON ALL STAINLESS FASTENERS TO PREVENT SEIZING AND GALLING

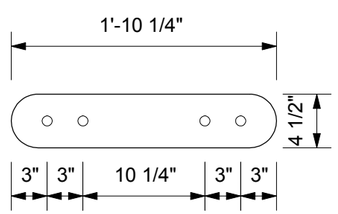

ITEM: Connector Piece to be Fabrication
MATERIAL: Aluminum 5052 Bar 3/16" Thick
AMT: 2 per Chair Except End (14 Total for Tour)
See S-12 for more information about assembly

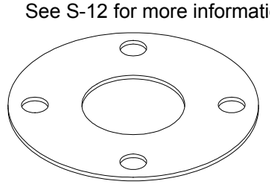

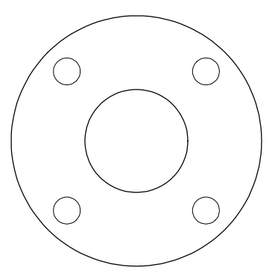

ITEM: Compressible Buna-N Flange Gasket 2 1/2" Pipe 1/8" Thick or Waterjet Equivalent
MATERIAL: Aluminum 5052
AMT: 1 per Chair (15 Total for Tour, 17 Total for 360)
See S-13 for more information about assembly

1 CHAIR HARDWARE SCHEDULE

ITEMS FOR CHAIR ASSEMBLY (CONT.)

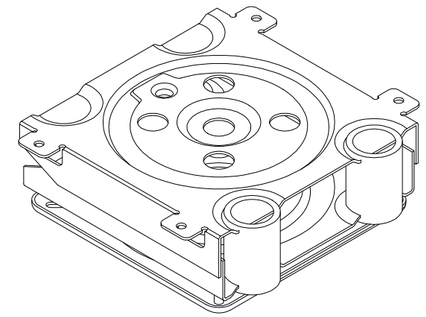

ITEM: Woodtek Swivel Rocker Mechanism Black 8-1/2" wide x 9-1/4" long (164-231)
MATERIAL: Steel with Black ED (e-coat) finish
AMT: 1 per Chair (15 Total for Tour, 17 Total for 360)
See S-13 for more information about assembly

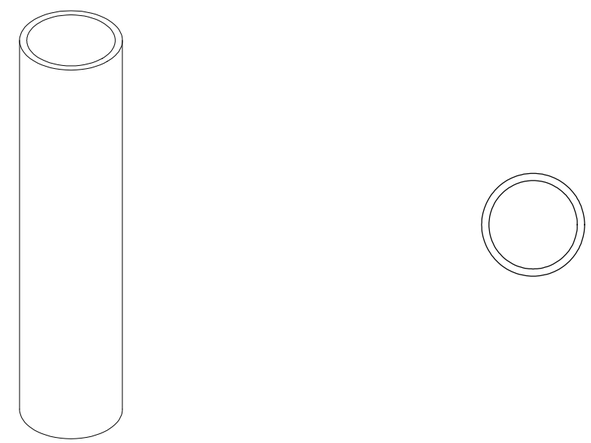

ITEM: 2 1/2" Pipe 1' 5/8" Long
MATERIAL: Aluminum 5052 with Painted Finish See Color Index
AMT: 1 per Chair (15 Total for Tour, 17 Total for 360)
See S-13 for more information about assembly

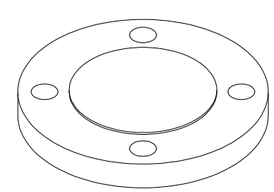

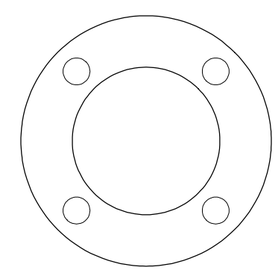

ITEM: 2 1/2" Bolt Circle Blind Flange or Waterjet Equivalent
MATERIAL: Aluminum 5052 with Painted Finish See Color Index
AMT: 1 per Chair (15 Total for Tour, 17 Total for 360)
See S-13 for more information about assembly

2 CHAIR DETAILS

NO.	ISSUE	DATE
1	BID SET	2 August 2016

SAN ANTONIO RIVERBOATS
PROTOTYPE

[METALAB ARCHITECTURE]
20 N Sampson St
Houston, Texas 77003
713.426.3640
www.metalabstudio.com
info@metalabstudio.com
ARCHITECT

Gensler Hidalgo Design
Gensler Houston
3005 Carol Drive,
Kenner, Louisiana 70062
(504)466-7030
NAVAL ARCHITECT

SAR

SHEET SIZE: 12 X 18
SCALE AS NOTED

BID SET
NOT FOR CONSTRUCTION

CHAIR HARDWARE SCHEDULE AND CHAIR DETAILS

S-13

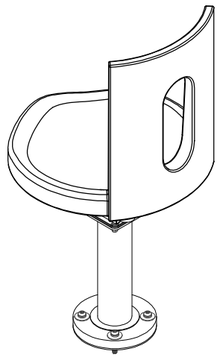

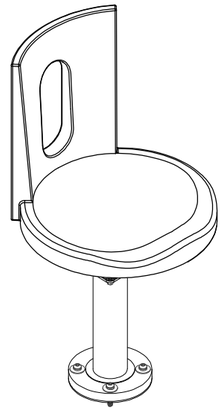

FOR HARDWARE AND DETAILS, SEE S-13

2 CHAIR ASSEMBLY 1:12

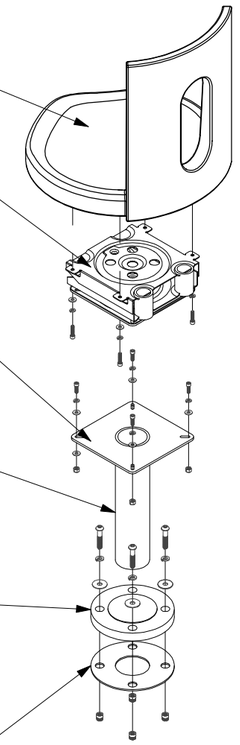

4 CHAIR ASSEMBLY 1:12

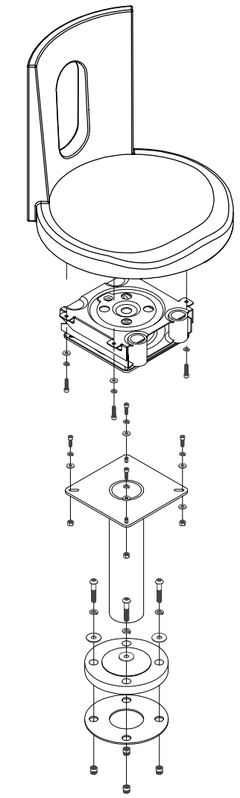

MATERIAL:
ROTO MOLDED
PLASTIC SEAT
COLOR TO MATCH
BENCH FABRIC
(SEE COLOR INDEX)
PROCURE AS DETAILED
ON SPECIFICATIONS

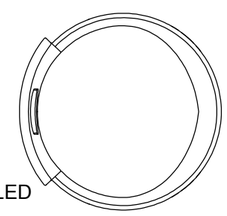

SEAT PLAN VIEW

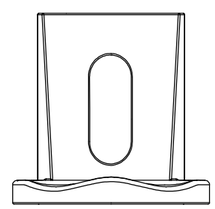

SEAT ELEVATION VIEW

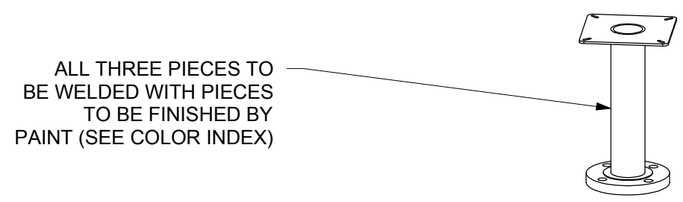

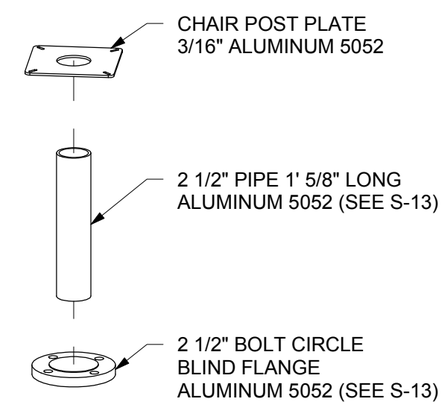

MATERIAL:
3/16" ALUMINUM 5052
AFTER ASSEMBLED,
FINISHED WITH
PAINT (SEE COLOR INDEX)

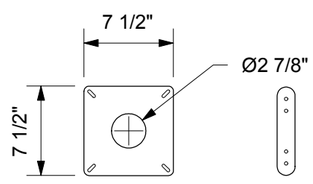

POST PLATE

CONNECTOR (GROUP TOUR ONLY)
SEE S-13 FOR DIMENSIONS

1 CHAIR PIECES 1:12

3 CHAIR POST ASSEMBLY 1:12

NOTE: ALL CUT FILES TO BE
SUPPLIED TO WINNING BIDDER
NOTE: MUST BE COMPLETED
TO THE SATISFACTION OF
METALAB STUDIO (SEE SPECS)

NO.	ISSUE	DATE
1	BID SET	3 August 2016

SAN ANTONIO RIVERBOATS
PROTOTYPE

[METALAB ARCHITECTURE]
20 N Sampson St
Houston, Texas 77003
713.426.3640
www.metalabstudio.com
info@metalabstudio.com
ARCHITECT

Gensler Houston, Design
Architects, Inc.
3001 Caverns Drive,
Suite 100, Houston, Texas
77063
(713) 425-7000
NAVAL ARCHITECT

SAR

BID SET
NOT FOR CONSTRUCTION

SHEET SIZE: 12 X 18
SCALE AS NOTED

CHAIR ASSEMBLY
DRAWINGS

S-14

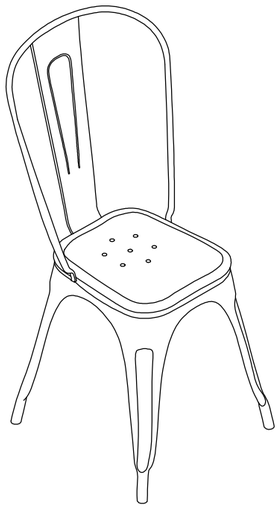

REPRODUCTION TOLIX CHAIR X 18
FOR NONSTATIONARY SEATING
FLAST FURNITURE METAL CHAIR COLOR: SILVER

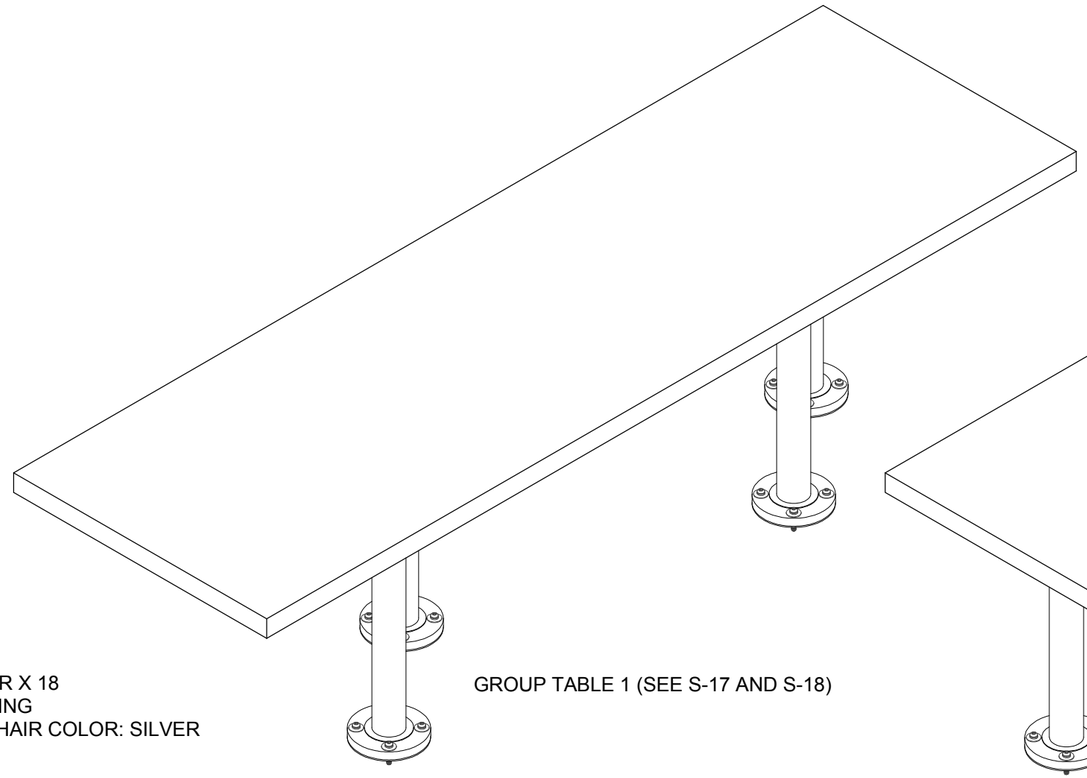

GROUP TABLE 1 (SEE S-17 AND S-18)

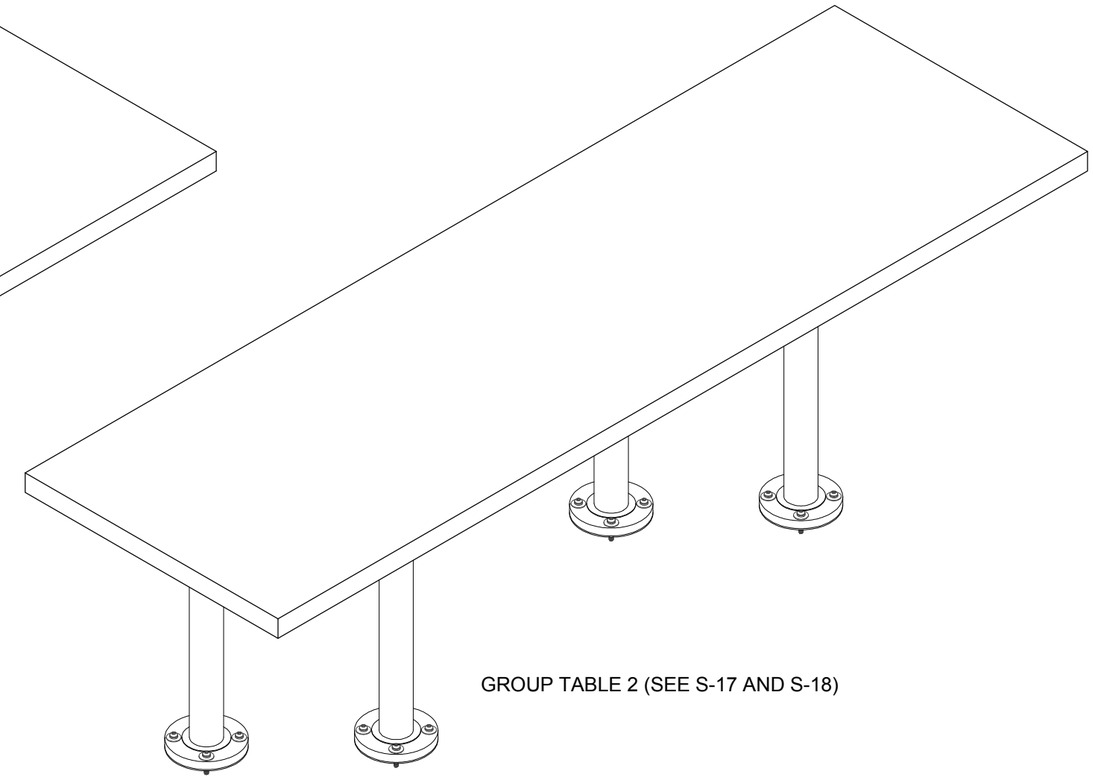

GROUP TABLE 2 (SEE S-17 AND S-18)

2 DINING SCHEDULE (GROUP SEATING) 1:24

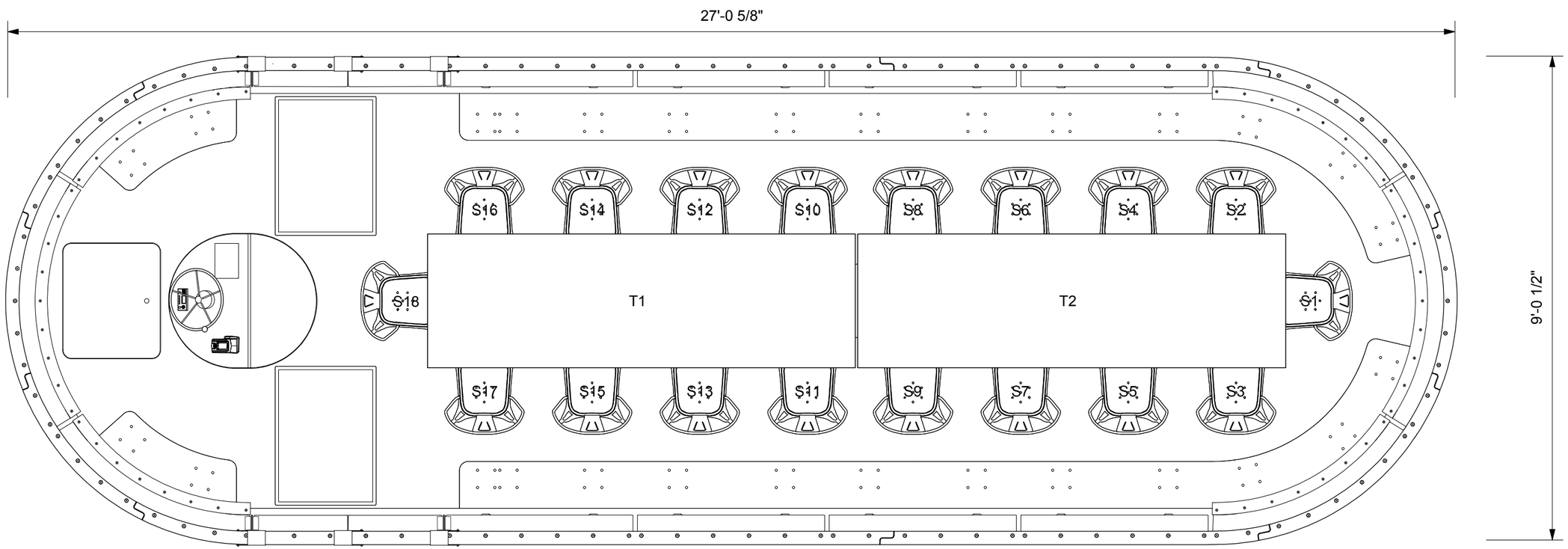

1 DINING PLAN (GROUP SEATING) 1:24

NOTE: MUST BE COMPLETED TO THE SATISFACTION OF METALAB STUDIO (SEE SPECS)

NO.	ISSUE	DATE
1	BID SET	2 August 2016

SAN ANTONIO RIVERBOATS
PROTOTYPE

[METALAB ARCHITECTURE]
20 N Sampson St
Houston, Texas 77003
713.426.3640
www.metalabstudio.com
info@metalabstudio.com
ARCHITECT

Gensler Texas Design
Group, Inc. (TBPE)
3001 Caruth Haven
Dallas, Texas 75225
(Authorized TBPE Firm
Registration 2010)
NAVAL ARCHITECT

SAR

SHEET SIZE: 12 X 18
SCALE AS NOTED

BID SET
NOT FOR CONSTRUCTION

GROUP DINING PLAN AND SCHEDULE

S-15

GROUP DINING HARDWARE SCHEDULE

DRAWING	DESCRIPTION	TOTAL
	18-8 Stainless Steel Round Head Screw for Wood Slotted No. 8 1" Long 91607A199	64
	Plastic Head Thumb Screw Black Rosette Head 1/4"-20 3/8" Long 91185A801	16

ITEMS FOR GROUP DINING ASSEMBLY

NOTE: USE IRONTITE OR EQUAL ON ALL STAINLESS FASTENERS TO PREVENT SEIZING AND GALLING

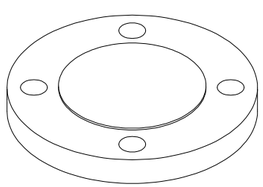

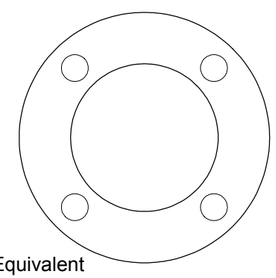

ITEM: 2 1/2" Bolt Circle Blind Flange or Waterjet Equivalent
MATERIAL: Aluminum 5052 with Painted Finish See Color Index
AMT: 2 Per Support Plate (8 Total)
See S-17 for more information about assembly

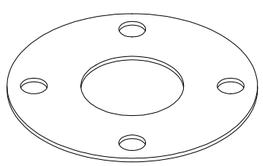

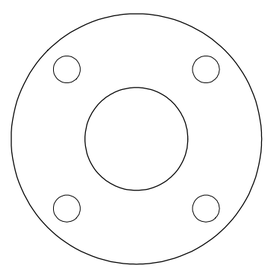

ITEM: Compressible Buna-N Flange Gasket 2 1/2" Pipe 1/8" Thick or Waterjet Equivalent
MATERIAL: Aluminum 5052
AMT: 2 per Support Plate (8 Total)
See S-17 for more information about assembly

ITEMS FOR GROUP DINING ASSEMBLY (CONT.)

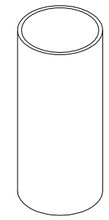

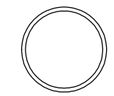

ITEM: 2 " Pipe 5 1/2" Long
MATERIAL: Aluminum 5052 with Painted Finish See Color Index
AMT: 2 per Support Plate (8 Total)
See S-17 for more information about assembly

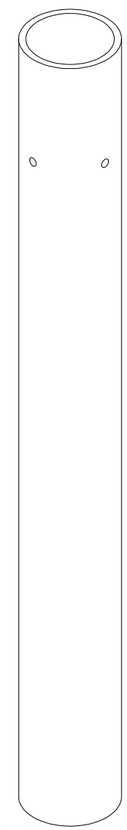

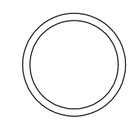

ITEM: 2 1/2" Pipe 2' 2" Long with Two Holes for 1/4"-20 Drilled at 90 deg. angle 3 1/2" from Top
MATERIAL: Aluminum 5052 with Painted Finish See Color Index
AMT: 2 per Support Plate (8 Total)
See S-17 for more information about assembly

1 GROUP DINING HARDWARE SCHEDULE

2 GROUP DINING DETAILS

NO.	ISSUE	DATE
1	BID SET	2 August 2016

SAN ANTONIO RIVERBOATS
PROTOTYPE

[METALAB ARCHITECTURE]
20 N Sampson St
Houston, Texas 77003
713.426.3640
www.metalabstudio.com
info@metalabstudio.com
ARCHITECT

Gensler Helmut Jahn Architects, Inc.
300E Gano Drive, Suite 100
Lexington, KY 40508
NAVAL ARCHITECT

SAR

SHEET SIZE: 12 X 18
SCALE AS NOTED

BID SET
NOT FOR CONSTRUCTION

GROUP DINING HARDWARE SCHEDULE AND DETAILS

S-16

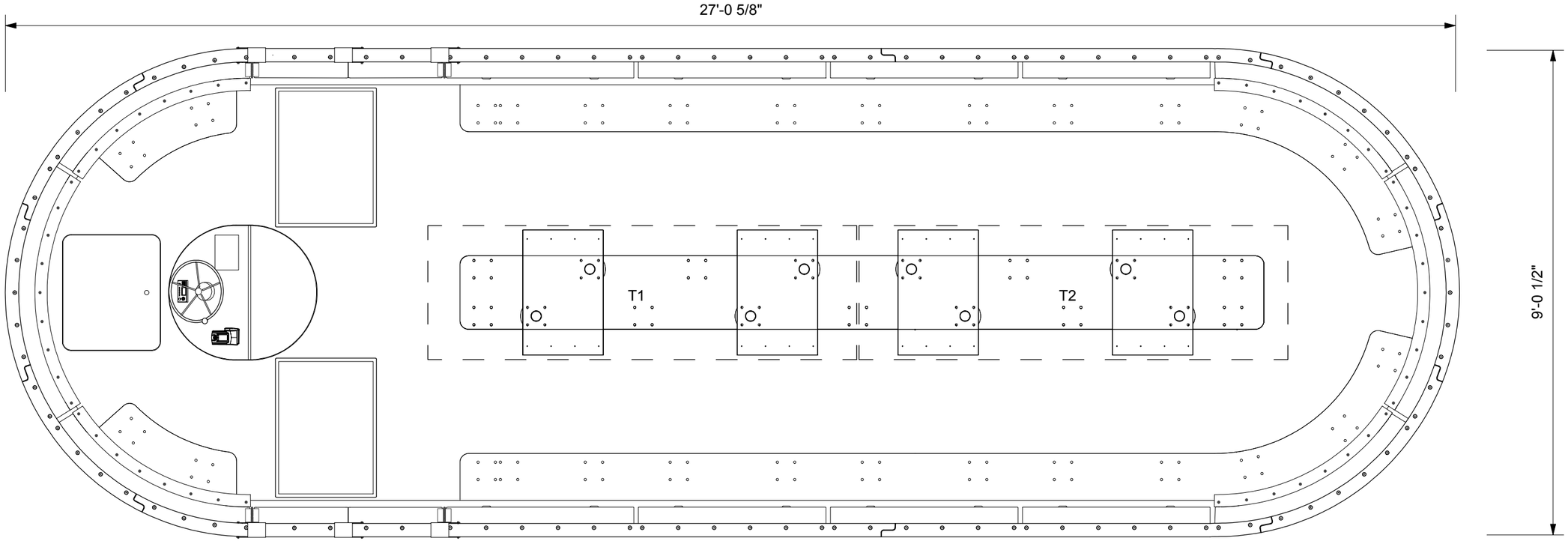

2 GROUP DINING ASSEMBLY 1:24

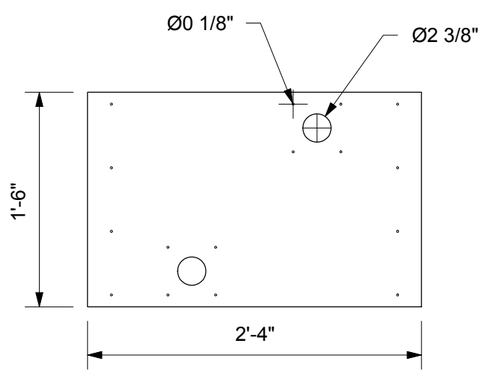

MATERIAL:
3/16" ALUMINUM 5052
AFTER ASSEMBLED,
FINISHED WITH
PAINT (SEE COLOR INDEX)

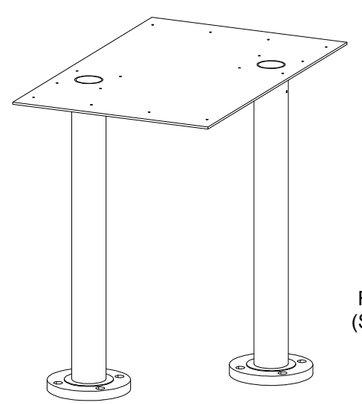

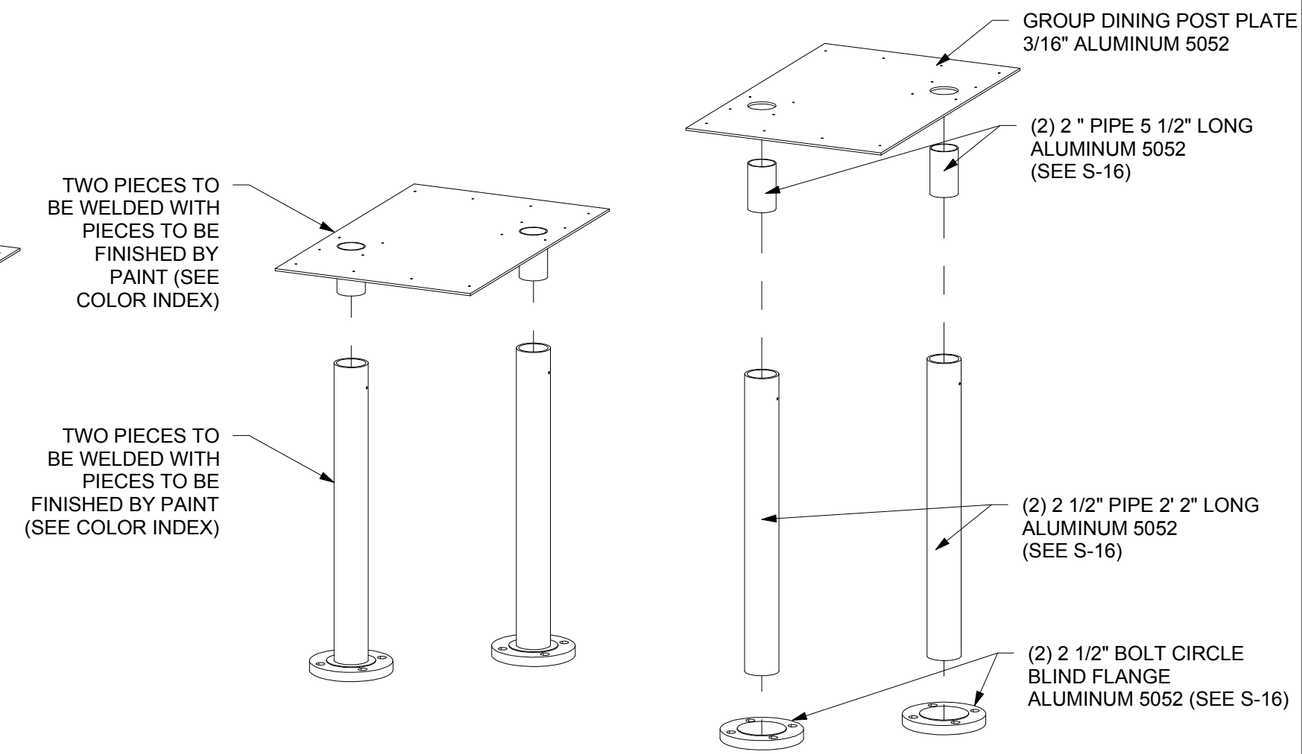

1 GROUP DINING POST ASSEMBLY 1:12

NOTE: ALL CUT FILES TO BE SUPPLIED TO WINNING BIDDER
NOTE: MUST BE COMPLETED TO THE SATISFACTION OF METALAB STUDIO (SEE SPECS)

NO.	ISSUE	DATE
1	BID SET	2 August 2016

SAN ANTONIO RIVERBOATS
PROTOTYPE

[METALAB ARCHITECTURE]
20 N Sampson St
Houston, Texas 77003
713.426.3640
www.metalabstudio.com
info@metalabstudio.com
ARCHITECT

Gensler Houston, Design Architects, Inc.
3001 Caroll Drive,
Suite 700, Houston, Texas 77339
NAVAL ARCHITECT

SAR

SHEET SIZE: 12 X 18
SCALE AS NOTED

BID SET
NOT FOR CONSTRUCTION

GROUP DINING
POST ASSEMBLY
DRAWINGS

S-17

FOR HARDWARE AND DETAILS, SEE S-16
FOR POST ASSEMBLY, SEE S-17

FOR GROUP TABLES, ALL FABRICATION PARTS ARE THE SAME EXCEPT HOLES IN TOP WOOD PIECE WHICH ARE MIRRORED BETWEEN TABLE 1 AND 2 AND POSTS ARE ROTATED TO FIT HOLES

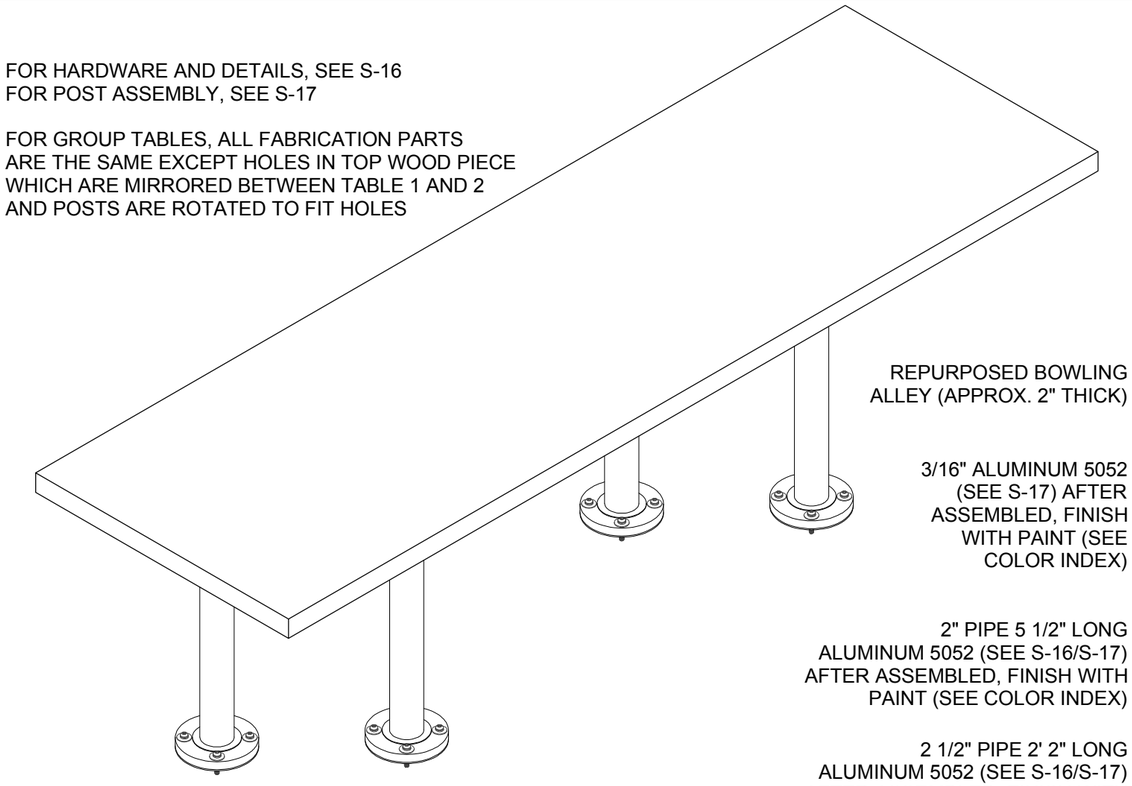

TABLE TOP MATERIAL:
REPURPOSED BOWLING ALLEY (APPROX. 2" THICK) SANDED FLUSH AND CUT TO 8' SECTIONS; FINISHED WITH LOBO OR APPROVED EQUAL

2 GROUP TABLE ASSEMBLY 1:12

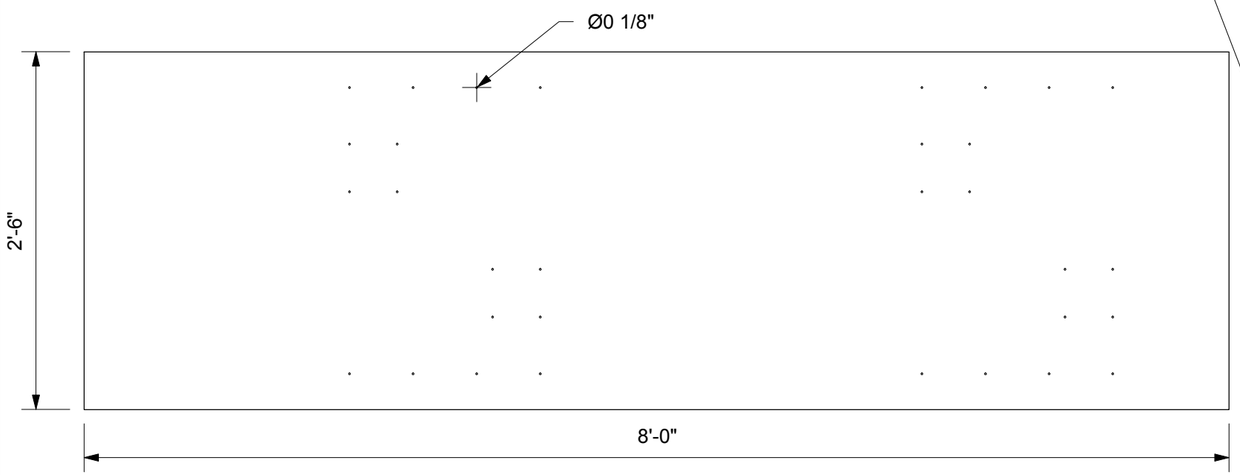

1 GROUP TABLE PIECES 1:12

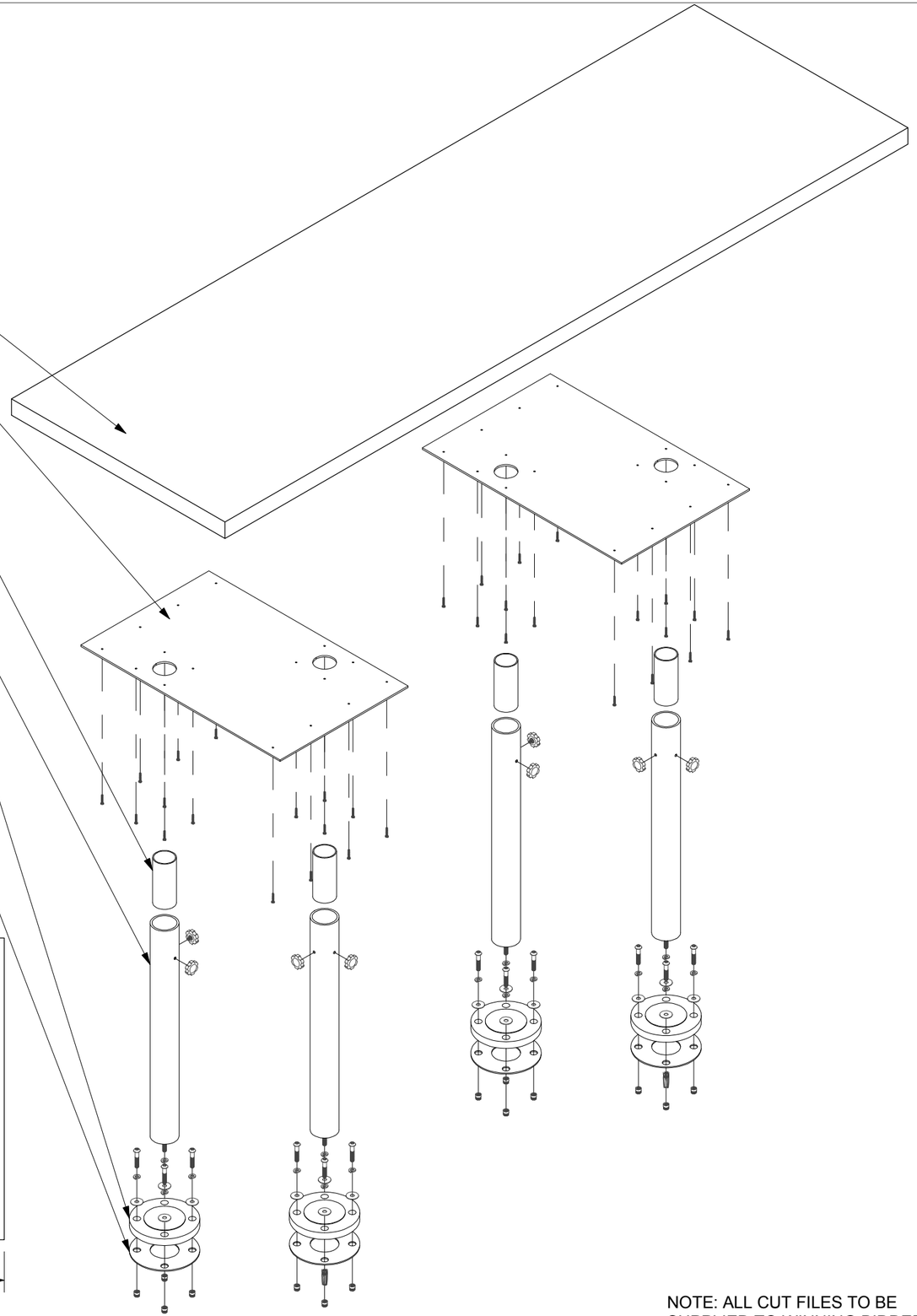

3 GROUP TABLE ASSEMBLY 1:12

NOTE: ALL CUT FILES TO BE SUPPLIED TO WINNING BIDDER
NOTE: MUST BE COMPLETED TO THE SATISFACTION OF METALAB STUDIO (SEE SPECS)

NO.	ISSUE	DATE
1	BID SET	2 August 2016

SAN ANTONIO RIVERBOATS
PROTOTYPE

[METALAB ARCHITECTURE]
20 N Sampson St
Houston, Texas 77003
713.426.3640
www.metalabstudio.com
info@metalabstudio.com
ARCHITECT

Gensler Texas, Design Architects, LLP
3005 Cleburne St.
Houston, Texas 77004
(713) 529-7700
NAVAL ARCHITECT

SAR

SHEET SIZE: 12 X 18
SCALE AS NOTED

BID SET
NOT FOR CONSTRUCTION

GROUP DINING ASSEMBLY DRAWINGS

S-18

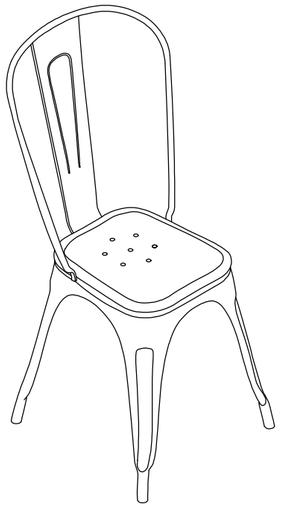

REPRODUCTION TOLIX CHAIR X 14
FOR NONSTATIONARY SEATING
FLASH FURNITURE METAL CHAIR COLOR: SILVER
FOR BENCH SEATING, SEE S-9 AND S-10

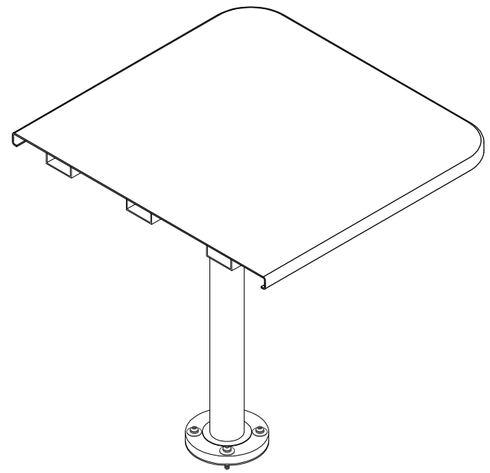

SHORT TABLE X 4 (SEE S-21, S-22, AND S-23)
S-SERIES

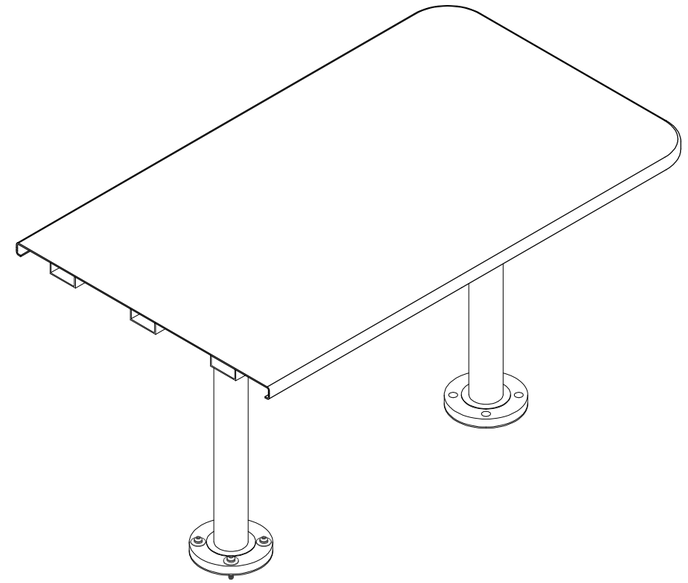

LONG TABLE X 2 (SEE S-21, S-22, AND S-24)
L-SERIES

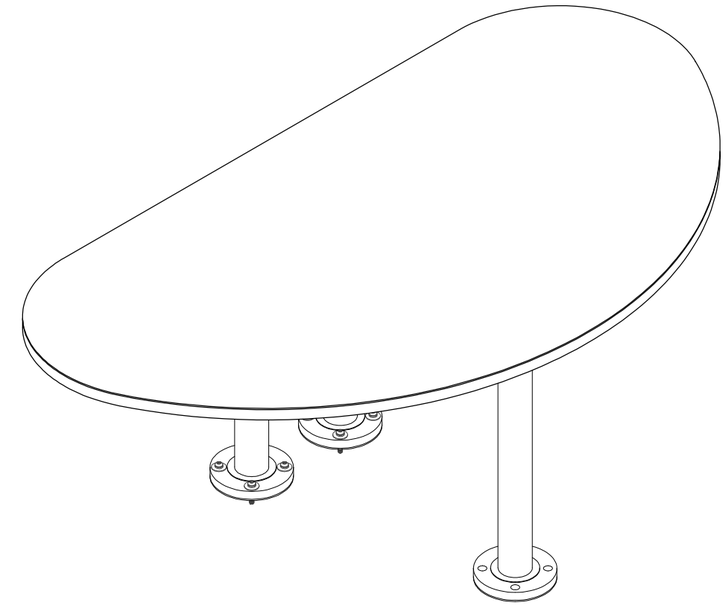

BACK TABLE X 1 (SEE S-21, S-22, AND S-25)
B-SERIES

2 BISTRO DINING SCHEDULE 1:24

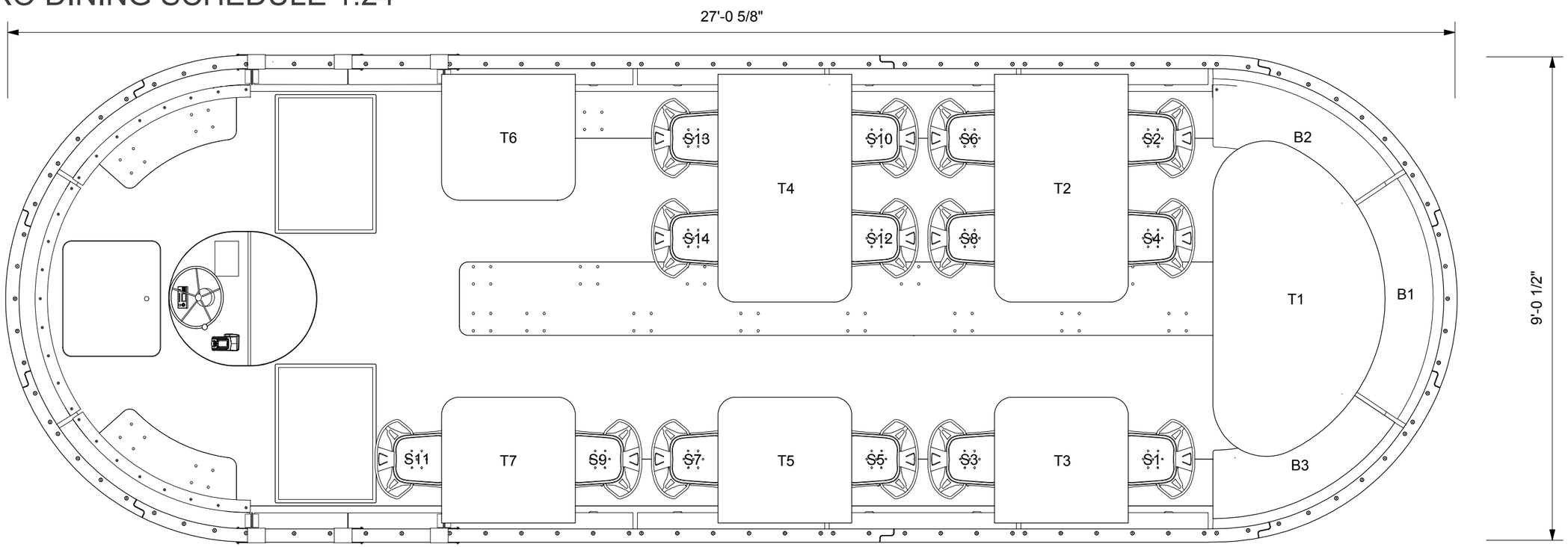

1 DINING PLAN (BISTRO SEATING) 1:24

NOTE: MUST BE COMPLETED TO THE SATISFACTION OF METALAB STUDIO (SEE SPECS)

NO.	ISSUE	DATE
1	BID SET	3 August 2016

SAN ANTONIO RIVERBOATS
PROTOTYPE

[METALAB ARCHITECTURE]
20 N Sampson St
Houston, Texas 77003
713.426.3640
www.metalabstudio.com
info@metalabstudio.com
ARCHITECT

Gensler Texas, Design Architects, Inc.
3005 Cleburne St.
Houston, Texas 77004
(713) 520-1900
NAVAL ARCHITECT

SAR

SHEET SIZE: 12 X 18
SCALE AS NOTED

BID SET
NOT FOR CONSTRUCTION

BISTRO DINING PLAN AND SCHEDULE

S-19

SPLIT DINING HARDWARE SCHEDULE

DRAWING	DESCRIPTION	# PER SHORT TABLE	# PER LONG TABLE	# PER BACK TABLE	TOTAL
	Plastic Head Thumb Screw Black Rosette Head 1/4"-20 3/8" Long 91185A801	2	4	6	22

ITEMS FOR BISTRO DINING ASSEMBLY

NOTE: USE IRONTITE OR EQUAL ON ALL STAINLESS FASTENERS TO PREVENT SEIZING AND GALLING

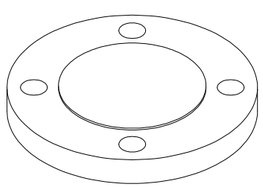

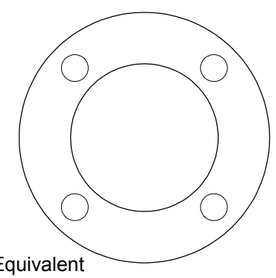

ITEM: 2 1/2" Bolt Circle Blind Flange or Waterjet Equivalent
MATERIAL: Aluminum 5052 with Painted Finish See Color Index
AMT: 1 Per S-Series, 2 Per L-Series, 3 Per B-Series (11 Total)
See S-21 for more information about assembly

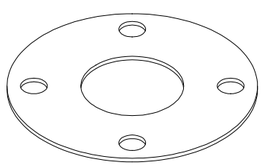

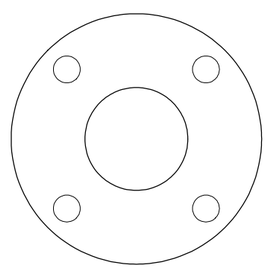

ITEM: Compressible Buna-N Flange Gasket 2 1/2" Pipe 1/8" Thick or Waterjet Equivalent
MATERIAL: Aluminum 5052
AMT: 1 Per S-Series, 2 Per L-Series, 3 Per B-Series (11 Total)
See S-21 for more information about assembly

1 BISTRO DINING HARDWARE SCHEDULE

ITEMS FOR SPLIT DINING ASSEMBLY (CONT.)

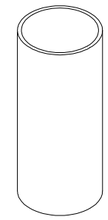

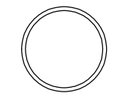

ITEM: 2 " Pipe 5 1/2" Long
MATERIAL: Aluminum 5052 with Painted Finish See Color Index
AMT: 1 Per S-Series, 2 Per L-Series, 3 Per B-Series (11 Total)
See S-21 for more information about assembly

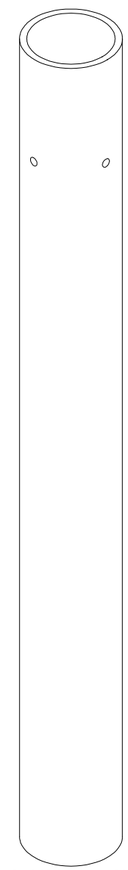

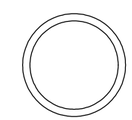

ITEM: 2 1/2" Pipe 2' 3 1/2" Long with Two Holes for 1/4"-20 Drilled at 90 deg. angle 3 1/2" from Top
MATERIAL: Aluminum 5052 with Painted Finish See Color Index
AMT: 1 Per S-Series, 2 Per L-Series, 3 Per B-Series (11 Total)
See S-21 for more information about assembly

2 BISTRO DINING DETAILS

NO.	ISSUE	DATE
1	BID SET	2 August 2016

SAN ANTONIO RIVERBOATS
PROTOTYPE

[METALAB ARCHITECTURE]
20 N Sampson St
Houston, Texas 77003
713.426.3640
www.metalabstudio.com
info@metalabstudio.com
ARCHITECT

Gwinn Marine, Design
and Naval Architecture
3005 Canal Drive,
New Orleans, La 70130
(504)944-7030
NAVAL ARCHITECT

SAR

BID SET
NOT FOR CONSTRUCTION

SHEET SIZE: 12 X 18
SCALE AS NOTED

BISTRO DINING HARDWARE SCHEDULE AND DETAILS

S-20

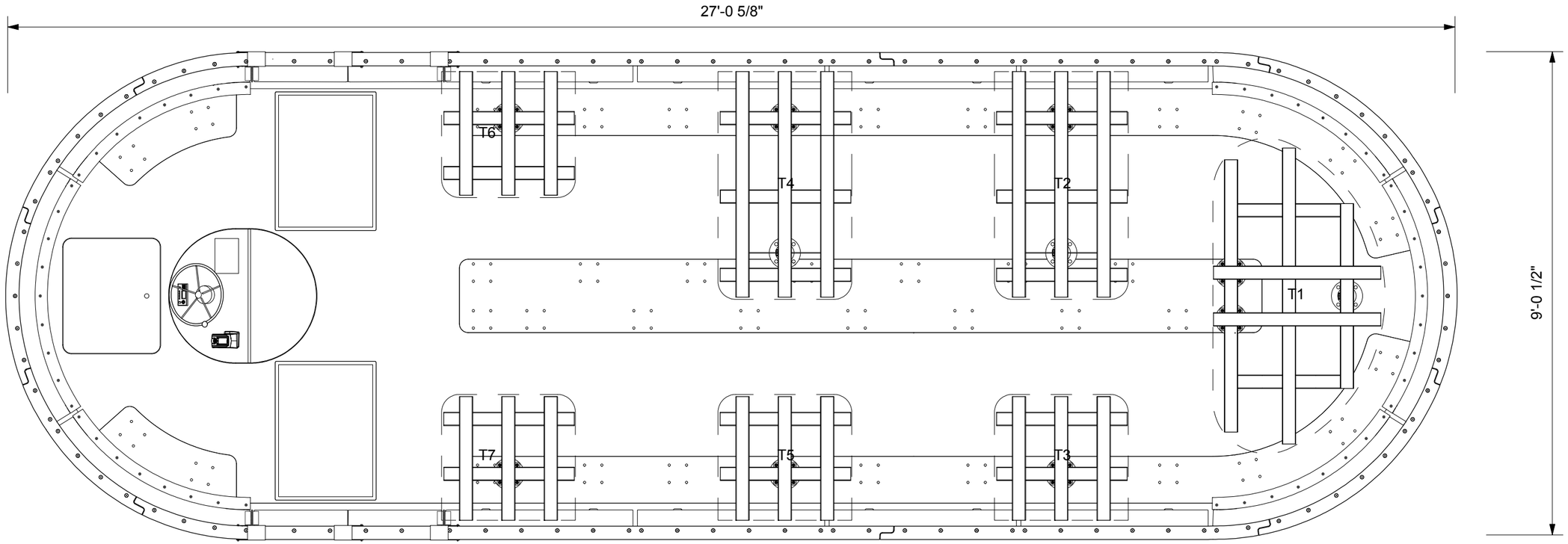

2 BISTRO DINING ASSEMBLY 1:24

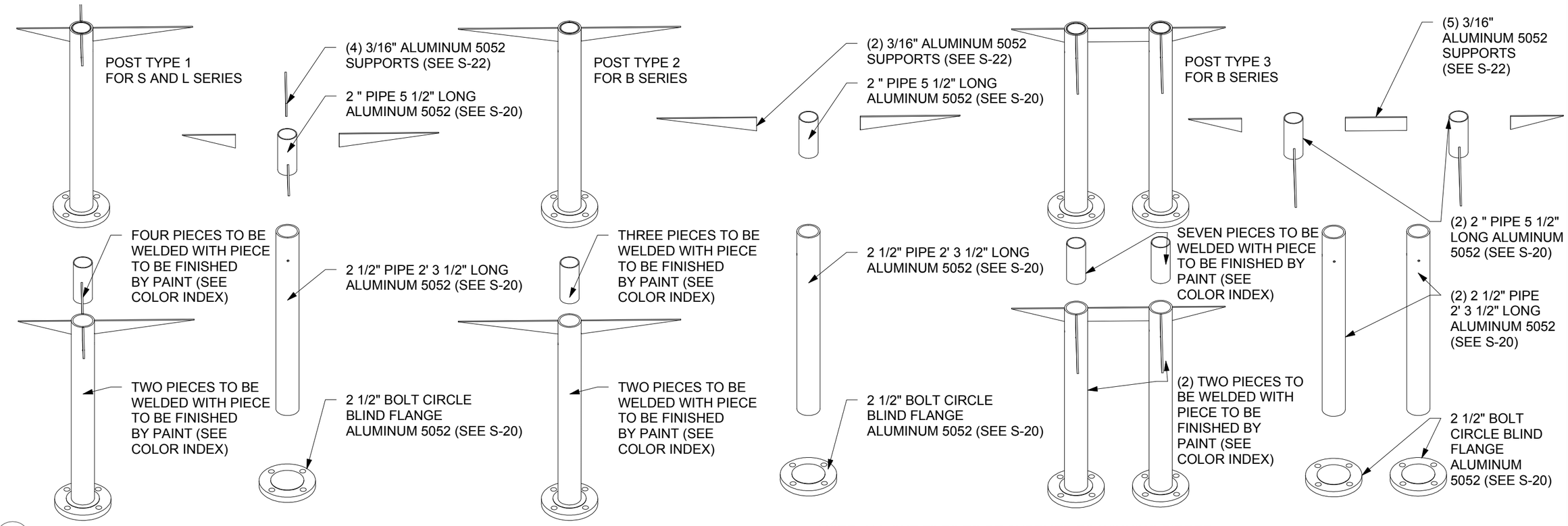

1 BISTRO DINING POST ASSEMBLY 1:12

NOTE: ALL CUT FILES TO BE SUPPLIED TO WINNING BIDDER
NOTE: MUST BE COMPLETED TO THE SATISFACTION OF METALAB STUDIO (SEE SPECS)

NO.	ISSUE	DATE
1	BID SET	2 August 2016

SAN ANTONIO RIVERBOATS
PROTOTYPE

[METALAB ARCHITECTURE]
20 N Sampson St
Houston, Texas 77003
713.426.3640
www.metalabstudio.com
info@metalabstudio.com
ARCHITECT

Gresip Nolan Design
Group, Inc.
3005 Canal Drive,
New Orleans, La
Louisiana 70130
NAVAL ARCHITECT

SAR

SHEET SIZE: 12 X 18
SCALE AS NOTED

BID SET
NOT FOR CONSTRUCTION

BISTRO DINING
POST ASSEMBLY
DRAWINGS

S-21

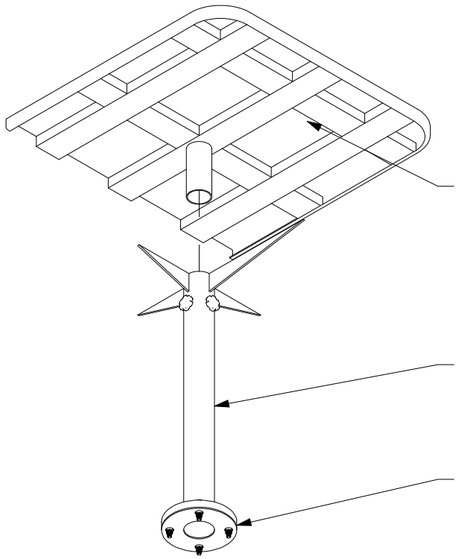

SHORT TABLE X 4 (SEE S-21 AND S-23)
S-SERIES

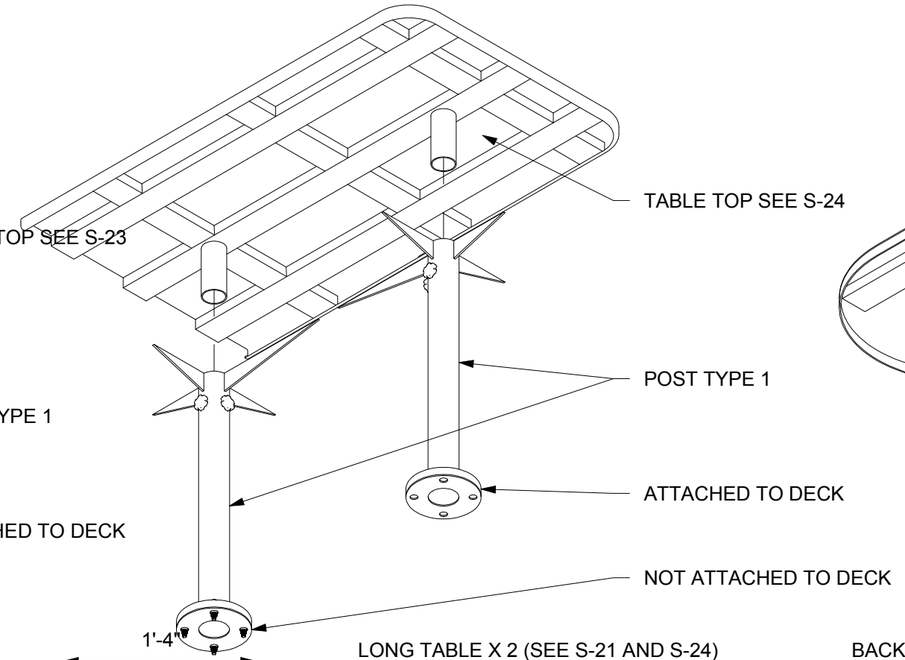

LONG TABLE X 2 (SEE S-21 AND S-24)
L-SERIES

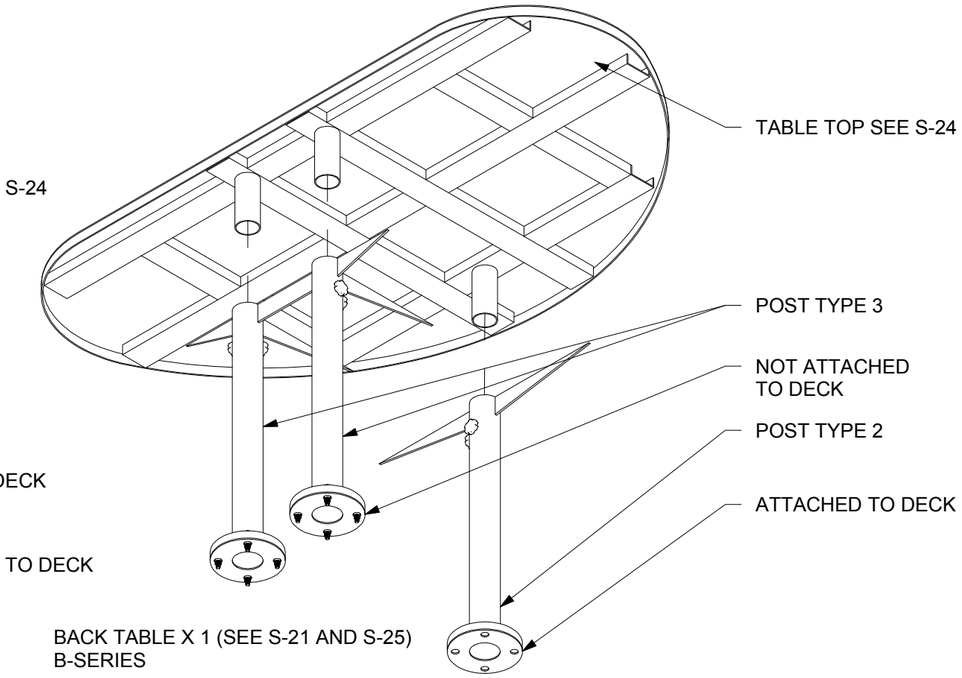

BACK TABLE X 1 (SEE S-21 AND S-25)
B-SERIES

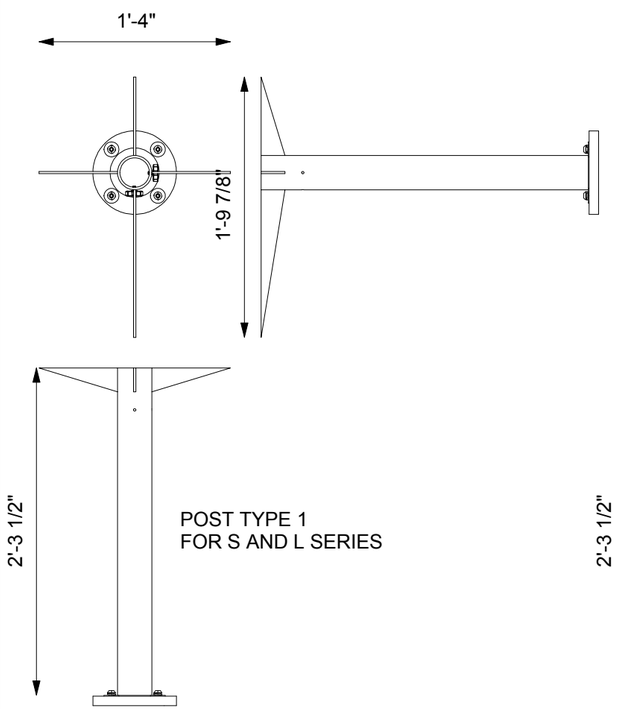

POST TYPE 1
FOR S AND L SERIES

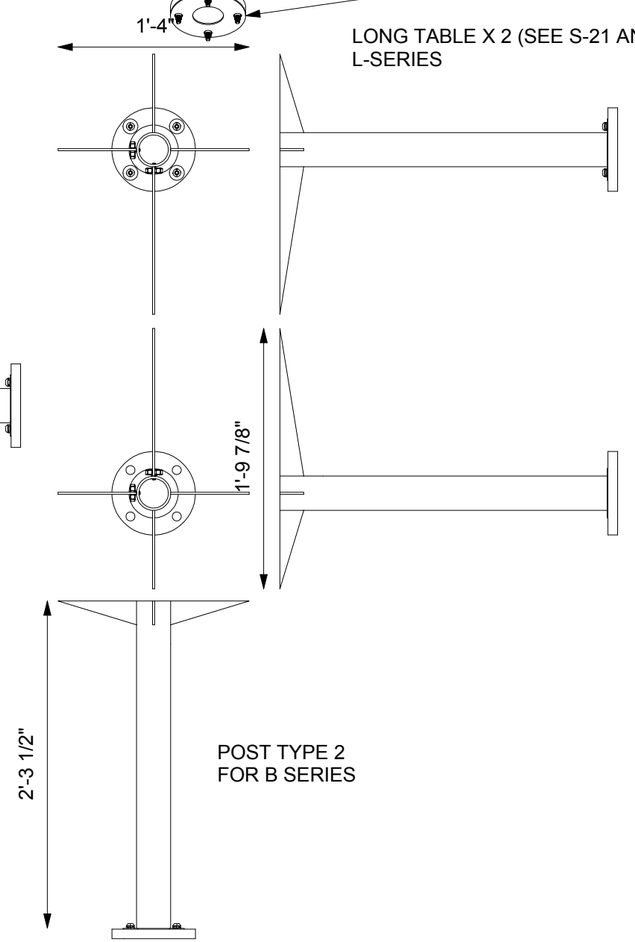

POST TYPE 2
FOR B SERIES

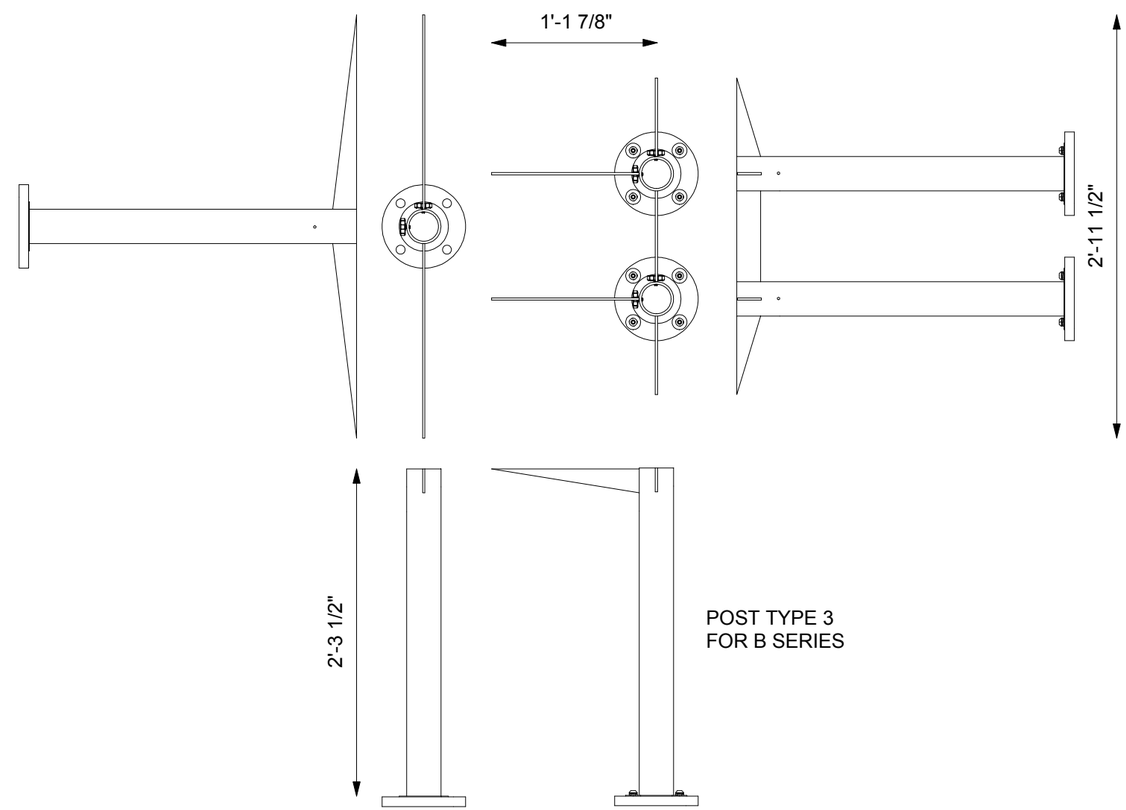

POST TYPE 3
FOR B SERIES

1 BISTRO DINING POST ASSEMBLY PIECES 1:12

NOTE: ALL CUT FILES TO BE SUPPLIED TO WINNING BIDDER
NOTE: MUST BE COMPLETED TO THE SATISFACTION OF METALAB STUDIO (SEE SPECS)

NO.	ISSUE	DATE
1	BID SET	2 August 2016

SAN ANTONIO RIVERBOATS
PROTOTYPE

[METALAB ARCHITECTURE]
20 N Sampson St
Houston, Texas 77003
713.426.3640
www.metalabstudio.com
info@metalabstudio.com
ARCHITECT

Gensler Texas, Design Architects, P.C.
3005 Carol Drive, Suite 200
Lewisville, TX 75056
NAVAL ARCHITECT

SAR

BID SET
NOT FOR CONSTRUCTION

SHEET SIZE: 12 X 18
SCALE AS NOTED

BISTRO DINING
POST ASSEMBLY
PIECES

S-22

FOR HARDWARE AND DETAILS, SEE S-20
FOR POST ASSEMBLY, SEE S-21 AND S-22

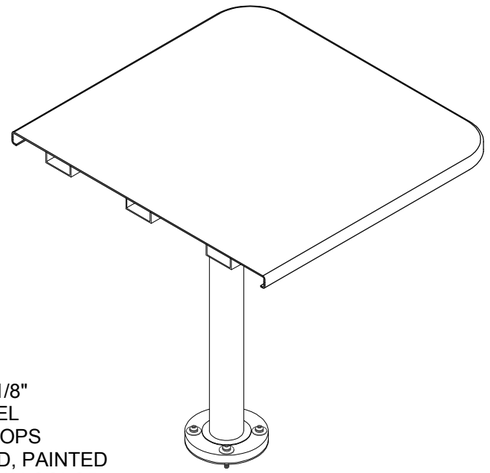

MATERIAL:
ALUMINUM 5052
INCLUDING 3" X 1 1/8"
1/8" THICK CHANNEL
1/8" THICK TABLETOPS
AFTER ASSEMBLED, PAINTED
TO MATCH DECK RIM COLOR
(SEE COLOR INDEX)

2 BISTRO DINING ASSEMBLY (S-SERIES) 1:12

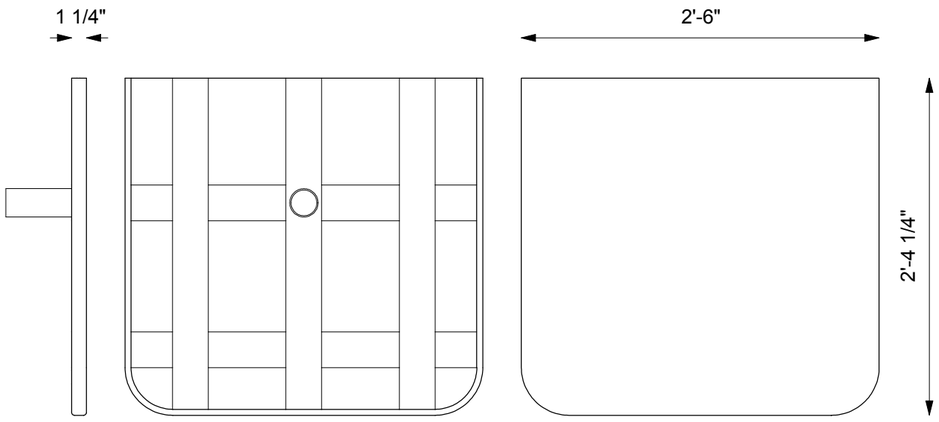

1 BISTRO DINING PIECES (S-SERIES) 1:12

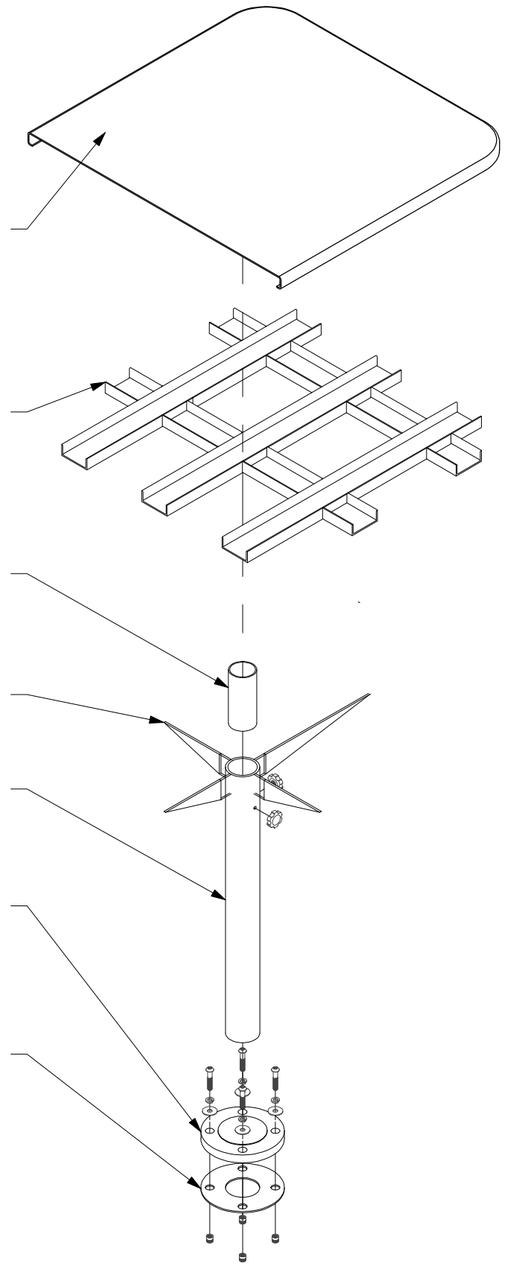

3 BISTRO DINING ASSEMBLY (S-SERIES) 1:12

NOTE: ALL CUT FILES
TO BE SUPPLIED TO
WINNING BIDDER
NOTE: MUST BE
COMPLETED TO THE
SATISFACTION OF
METALAB STUDIO
(SEE SPECS)

NO.	ISSUE	DATE
1	BID SET	2 August 2016

SAN ANTONIO RIVERBOATS
PROTOTYPE

[METALAB ARCHITECTURE]
20 N Sampson St
Houston, Texas 77003
713.426.3640
www.metalabstudio.com
info@metalabstudio.com
ARCHITECT

Gensler Texas, Design
Gensler Texas, Inc.
Design Architects
3005 Carroll Ave.
Dallas, Texas 75204
(214)2 3 2 3 0 0
NAVAL ARCHITECT

SAR

BID SET
NOT FOR CONSTRUCTION

SHEET SIZE: 12 X 18
SCALE AS NOTED

BISTRO DINING
ASSEMBLY
DRAWINGS 1
S-SERIES

S-23

FOR HARDWARE AND DETAILS, SEE S-20
FOR POST ASSEMBLY, SEE S-21 AND S-22

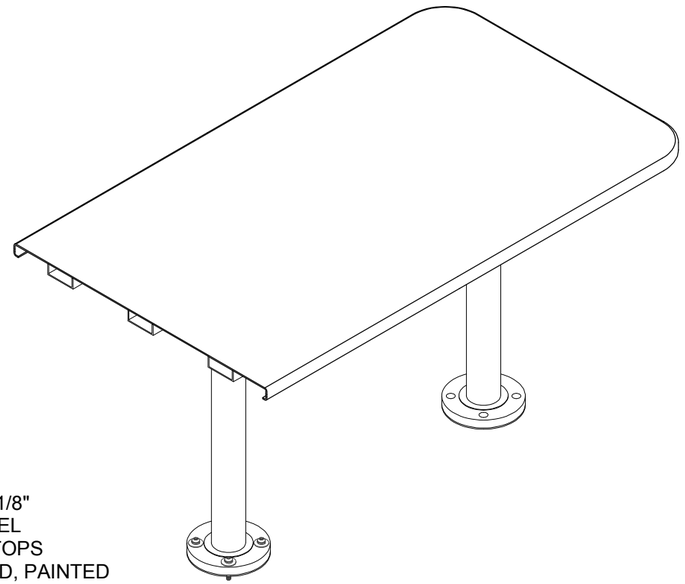

MATERIAL:
ALUMINUM 5052
INCLUDING 3" X 1 1/8"
1/8" THICK CHANNEL
1/8" THICK TABLETOPS
AFTER ASSEMBLED, PAINTED
TO MATCH DECK RIM COLOR
(SEE COLOR INDEX)

2 BISTRO DINING ASSEMBLY (L-SERIES) 1:12

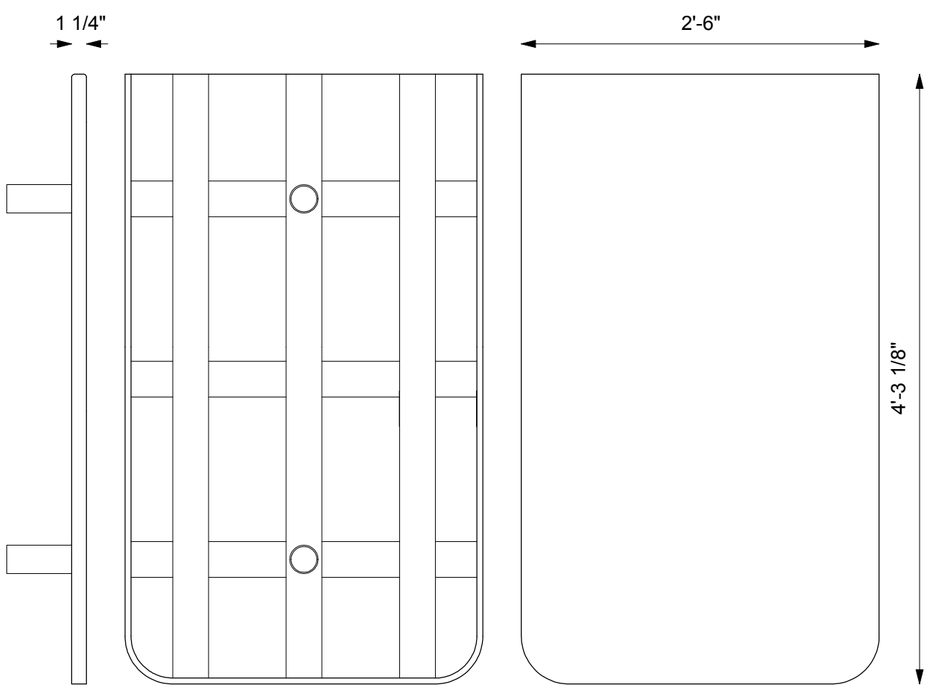

1 BISTRO DINING PIECES (L-SERIES) 1:12

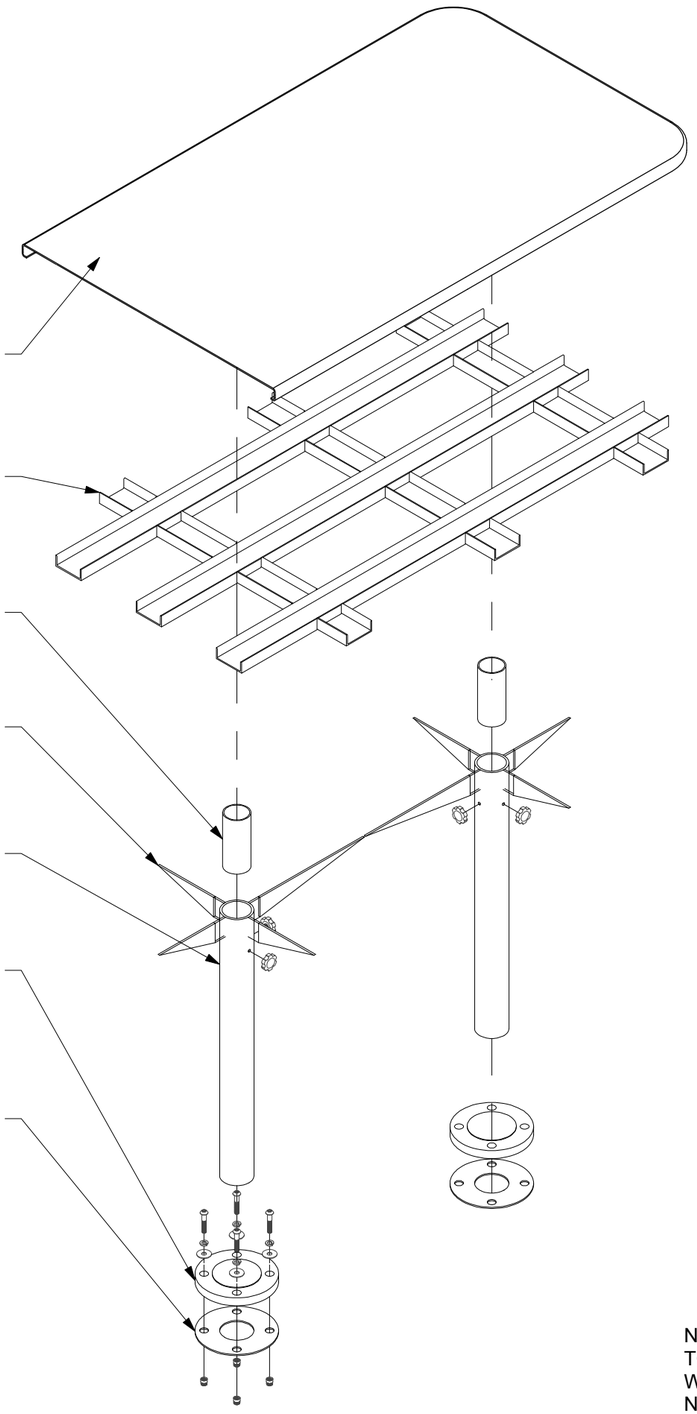

3 BISTRO DINING ASSEMBLY (L-SERIES) 1:12

NOTE: ALL CUT FILES
TO BE SUPPLIED TO
WINNING BIDDER
NOTE: MUST BE
COMPLETED TO THE
SATISFACTION OF
METALAB STUDIO
(SEE SPECS)

NO.	ISSUE	DATE
1	BID SET	2 August 2016

SAN ANTONIO RIVERBOATS
PROTOTYPE

[METALAB ARCHITECTURE]
20 N Sampson St
Houston, Texas 77003
713.426.3640
www.metalabstudio.com
info@metalabstudio.com
ARCHITECT

Gossen Livingston Design Group, Inc.
3005 Canal Drive,
New Orleans, La.
Louisiana 70130
NAVAL ARCHITECT

SAR

SHEET SIZE: 12 X 18
SCALE AS NOTED

BID SET
NOT FOR CONSTRUCTION

BISTRO DINING
ASSEMBLY
DRAWINGS 2
L-SERIES

S-24

FOR HARDWARE AND DETAILS, SEE S-20
FOR POST ASSEMBLY, SEE S-21 AND S-22

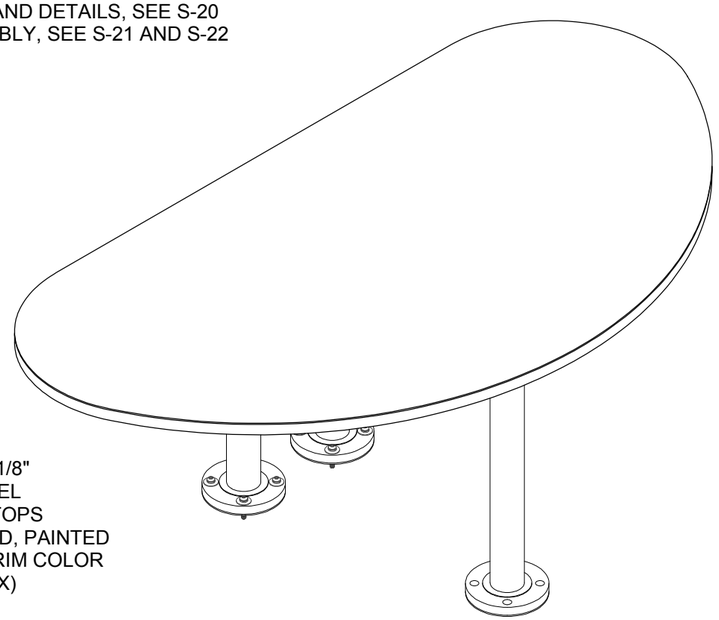

MATERIAL:
ALUMINUM 5052
INCLUDING 3" X 1 1/8"
1/8" THICK CHANNEL
1/8" THICK TABLETOPS
AFTER ASSEMBLED, PAINTED
TO MATCH DECK RIM COLOR
(SEE COLOR INDEX)

2 BISTRO DINING ASSEMBLY (B-SERIES) 1:12

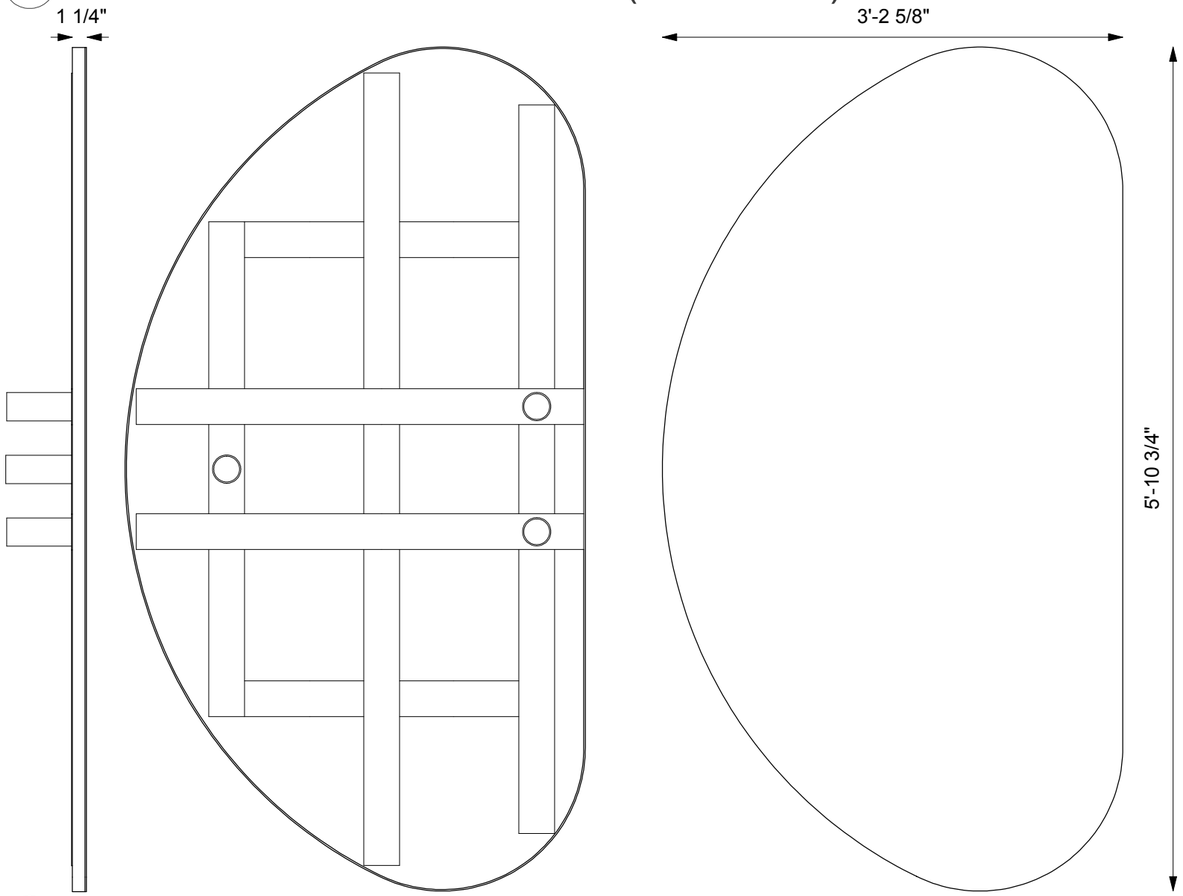

1 BISTRO DINING PIECES (B-SERIES) 1:12

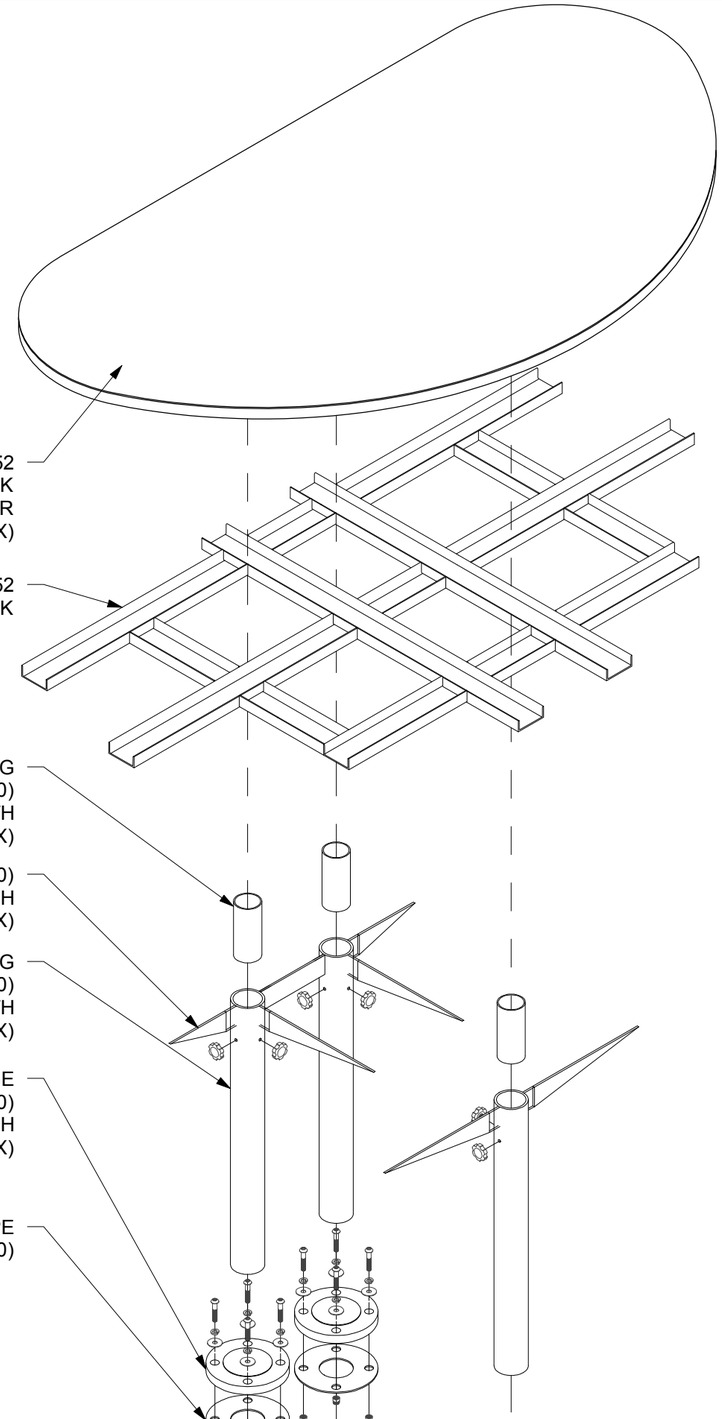

NOTE: ALL CUT FILES
TO BE SUPPLIED TO
WINNING BIDDER
NOTE: MUST BE
COMPLETED TO THE
SATISFACTION OF
METALAB STUDIO
(SEE SPECS)

3 BISTRO DINING ASSEMBLY (B-SERIES) 1:12

NO.	ISSUE	DATE
1	BID SET	2 August 2016

SAN ANTONIO RIVERBOATS
PROTOTYPE

[METALAB ARCHITECTURE]
20 N Sampson St
Houston, Texas 77003
713.426.3640
www.metalabstudio.com
info@metalabstudio.com
ARCHITECT

Gensler Houston, Design
Architects, Inc.
3001 Caruth Drive,
Suite 100, Plano, Tx
Louisiana 70130
NAVAL ARCHITECT

SAR

BID SET
NOT FOR CONSTRUCTION

SHEET SIZE: 12 X 18
SCALE AS NOTED

BISTRO DINING
ASSEMBLY
DRAWINGS 3
B-SERIES

S-25

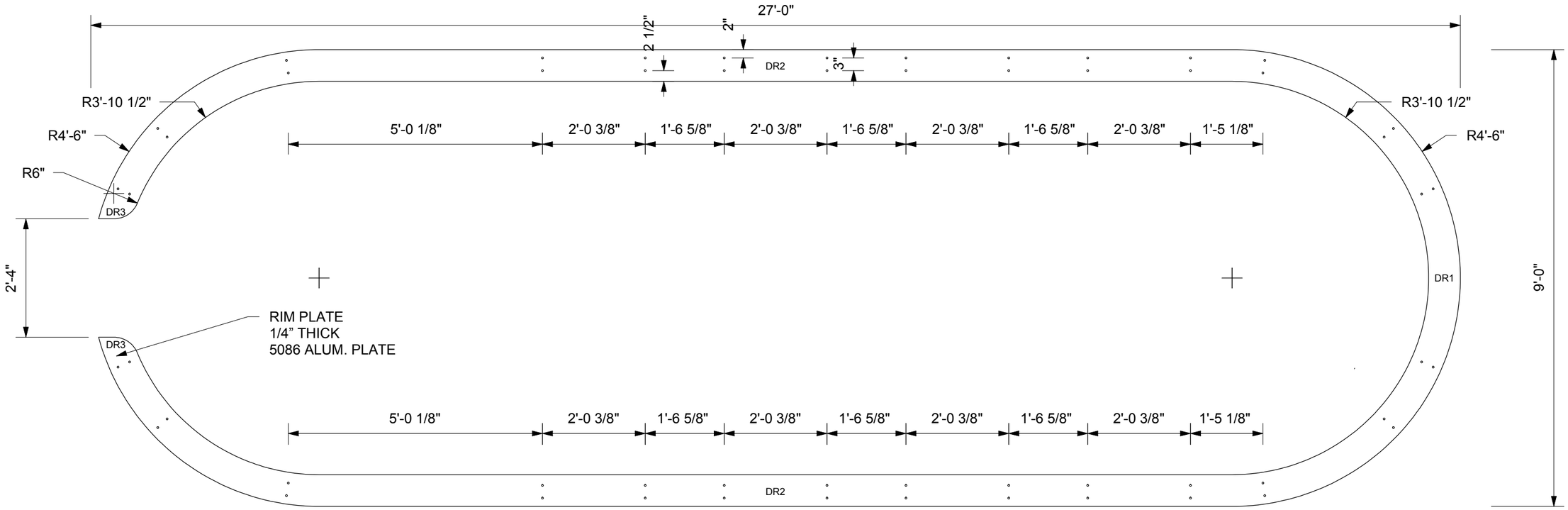

1 DECK RIM PLATE 1:24

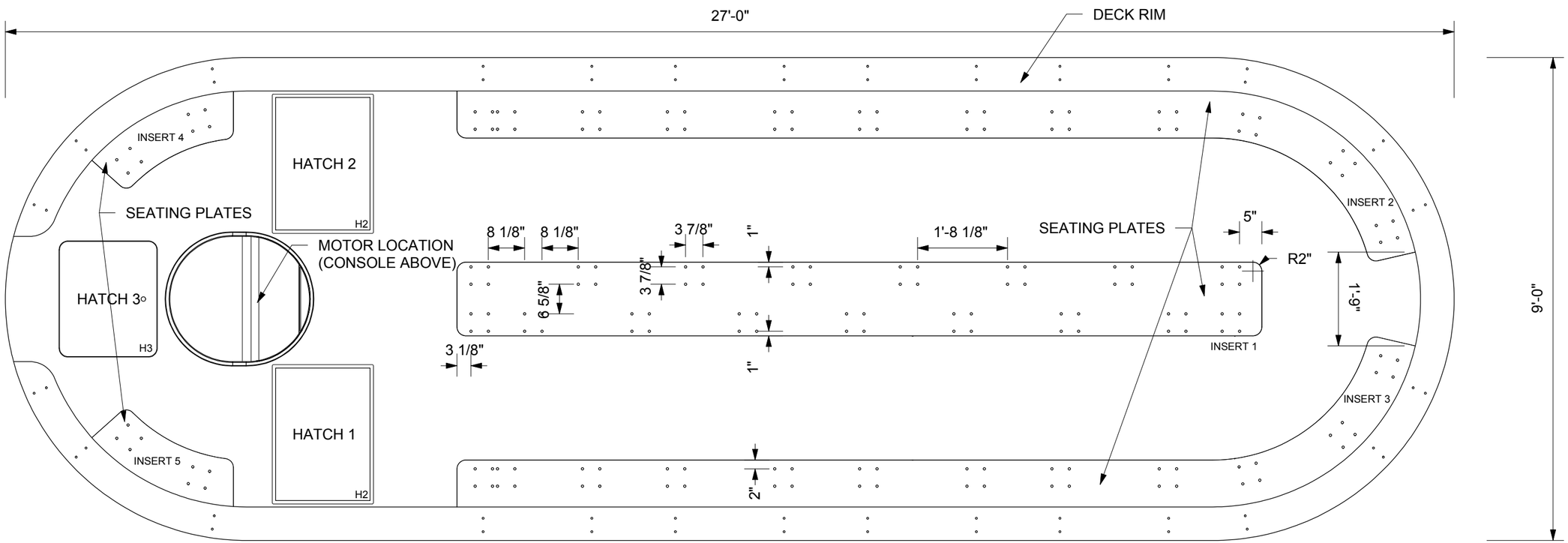

1 DECK PLAN 1:24

NOTE: ALL CUT FILES TO BE SUPPLIED TO WINNING BIDDER
NOTE: MUST BE COMPLETED TO THE SATISFACTION OF METALAB STUDIO (SEE SPECS)

NO.	ISSUE	DATE
1	BID SET	2 August 2016

SAN ANTONIO RIVERBOATS
PROTOTYPE

[METALAB ARCHITECTURE]
20 N Sampson St
Houston, Texas 77003
713.426.3640
www.metalabstudio.com
info@metalabstudio.com
ARCHITECT

Gonzo Velez Design
Gonzo Velez, Jr.
Principal
3005 Canal Drive,
New Orleans, La
Louisiana 70130
NAVAL ARCHITECT

SAR

SHEET SIZE: 12 X 18
SCALE AS NOTED

BID SET
NOT FOR CONSTRUCTION

DECK PLAN AND
DECK RIM PLATE

D-1

1 DECK ASSEMBLY

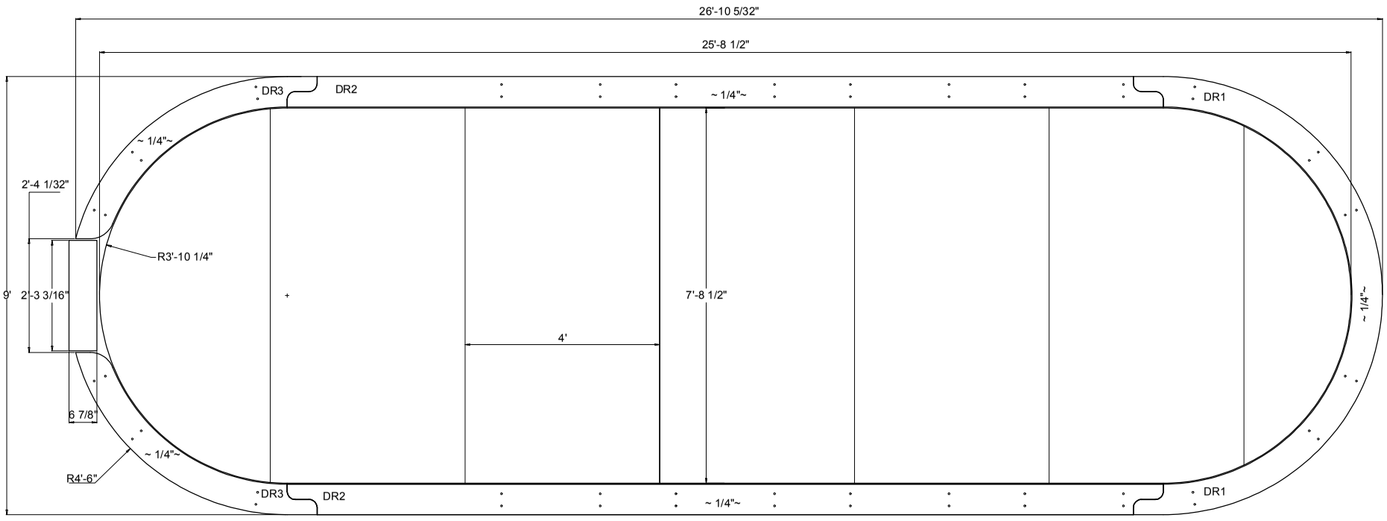

STAGE 1 - SETUP & DECK RIING WELDING

STAGE 1 NOTES:

1. THE MAIN CONSTRUCTION BASE SHOULD BE LEVEL. SHOULD A LEVEL SURFACE NOT BE AVAILABLE, IT IS RECOMMENDED TO CREATE A NEW LEVEL WITH SELF LEVELING COMPOUND OVER A SOLID BASE.

2. FULLY WELD THE DECK RING WITH S-JOINTS PRIOR TO FINAL DECK POSITIONING.

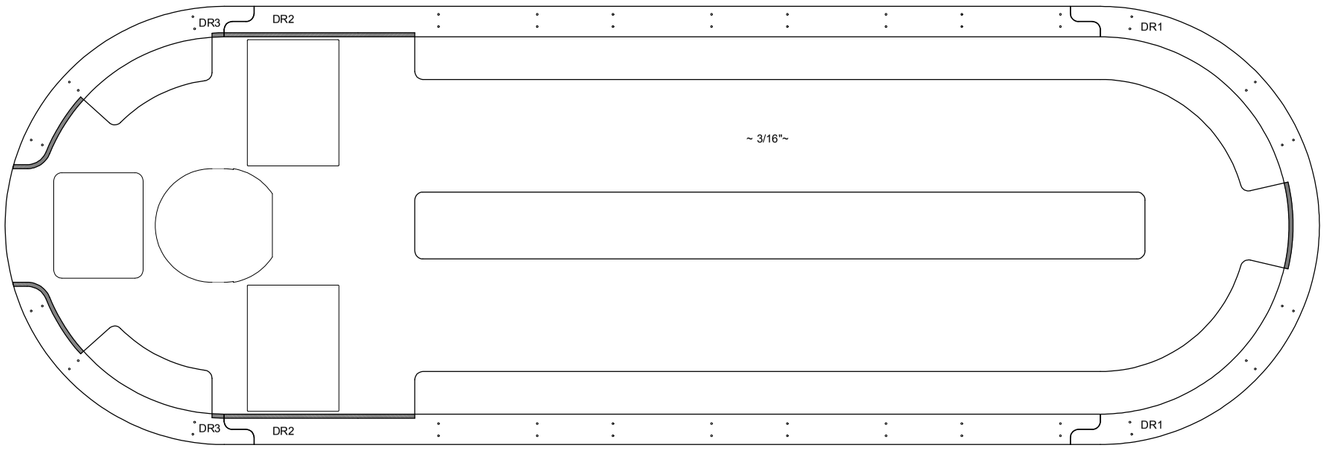

STAGE 2 - MAIN DECK WELDING

STAGE 2 NOTES:

1. THE 3/16" MAIN DECK WELDS DIRECTLY ONTO THE DECK RING WITH A CONSISTENT 1" OVERLAP WHERE CONTACT IS MADE.

2. WEIGHTS MAY BE PLACED ON THE SUPPORTED SIDES OF THE MAIN DECK TO STABILIZE THE JOINT WHILE BONDING.

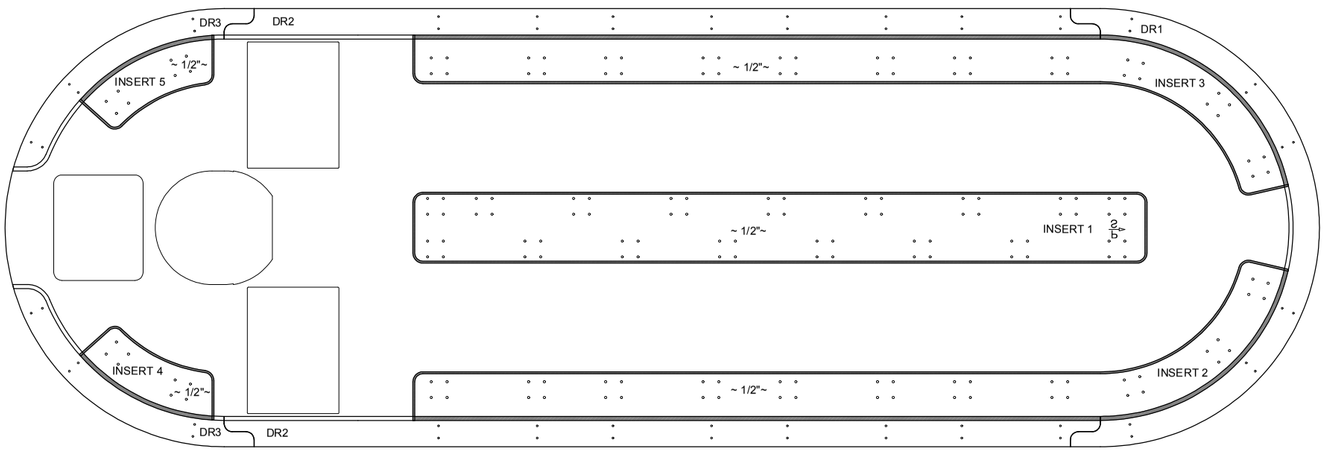

STAGE 3 - INSERT WELDING

STAGE 3 NOTES:

1. THE RABBITED INSERTS WILL BE PREPARED AS SHOWN ON DETAILS.

2. ENSURE THE ORIENTATION OF THE INSERT PLATES MATCHES THE DRAWING, REMEMBERING THAT THE DECK ASSEMBLY IS INVERTED IN BOTH THE DRAWING VIEW AND ON THE PRODUCTION BASE.

GENERAL NOTES:

1. ALL PARTS ARE ALUMINUM 5086 ALLOY.

2. ALL PART BUTT GAPS ARE 1/16" TYPICAL.

NOTE: MUST BE COMPLETED TO THE SATISFACTION OF METALAB STUDIO (SEE SPECS)

D-2

DECK ASSEMBLY

SHEET SIZE: 12 X 18
SCALE AS NOTED

SAR

SAN ANTONIO RIVERBOATS
PROTOTYPE

BID SET
NOT FOR CONSTRUCTION

[METALAB ARCHITECTURE]
20 N Sampson St
Houston, Texas 77003
713.426.3640
www.metalabstudio.com
info@metalabstudio.com
ARCHITECT

Gunter Marine Design
(985) 518-2383
3005 Carrol Drive,
Morgan City,
Louisiana 70380
NAVAL ARCHITECT

NO.	ISSUE	DATE
1	BID SET	2 August 2016

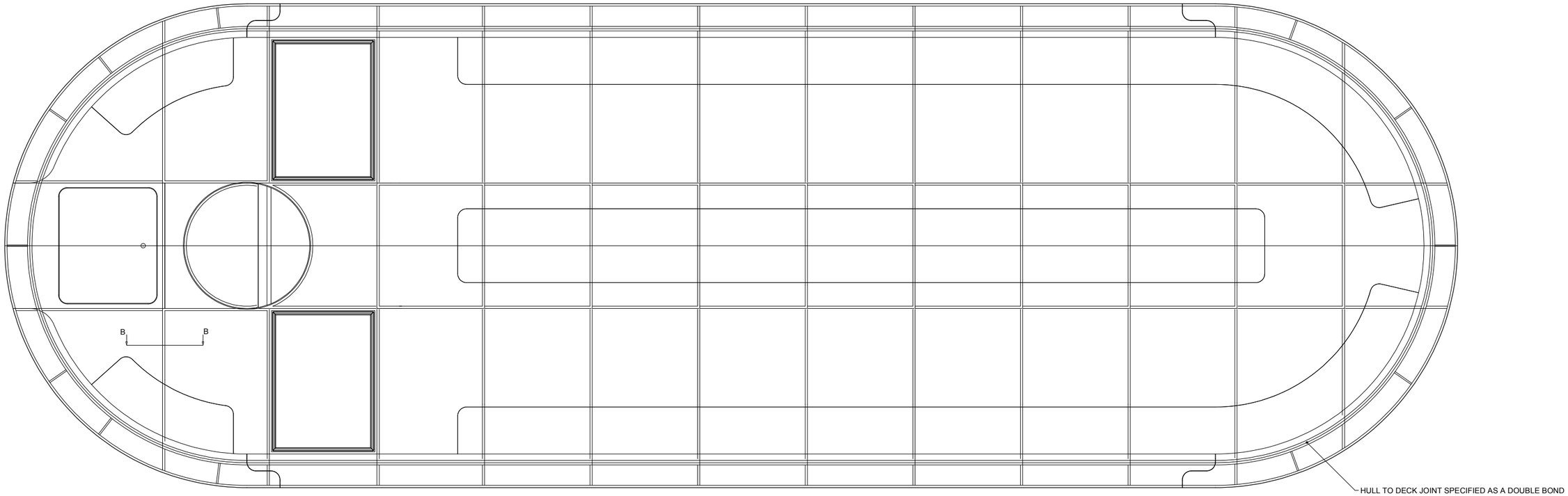

SCHEMATIC VIEW ON DECK INDICATING BOND POSITIONS

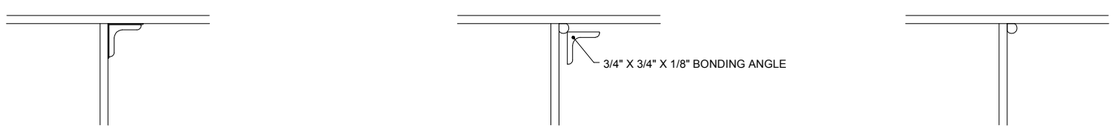

1 DECK ASSEMBLY ATTACHMENT DETAILS

NOTE: MUST BE COMPLETED TO THE SATISFACTION OF METALAB STUDIO (SEE SPECS)

NO.	ISSUE	DATE
1	BID SET	2 August 2016

SAN ANTONIO RIVERBOATS
PROTOTYPE

[METALAB ARCHITECTURE]
20 N Sampson St
Houston, Texas 77003
713.426.3640
www.metalabstudio.com
info@metalabstudio.com
ARCHITECT

Gregg Perkins Design
Naval Architecture
3005 Canal Drive,
New Orleans, La
Louisiana 70130
NAVAL ARCHITECT

SAR

SHEET SIZE: 12 X 18
SCALE AS NOTED

BID SET
NOT FOR CONSTRUCTION

DECK / INTERNAL STRUCTURE BONDING

D-3

DECK HARDWARE SCHEDULE

DRAWING	DESCRIPTION	TOTAL
	18-8 Stainless Steel Press-in Nut 3/8"-16 0.25" min. thickness 96439A840	4
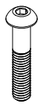	18-8 Stainless Steel Button Head Socket Cap Screw 3/8"-16 2" Length 92949A632	80
	18-8 Stainless Steel Oversized Flat Washer 3/8" 1.25" OD 90313A114	14
	18-8 Stainless Steel Split Lock Washer 3/8" 0.68" OD 92146A031	80

NOTE: USE IRONTITE OR EQUAL ON ALL STAINLESS FASTENERS TO PREVENT SEIZING AND GALLING

1 DECK HARDWARE SCHEDULE

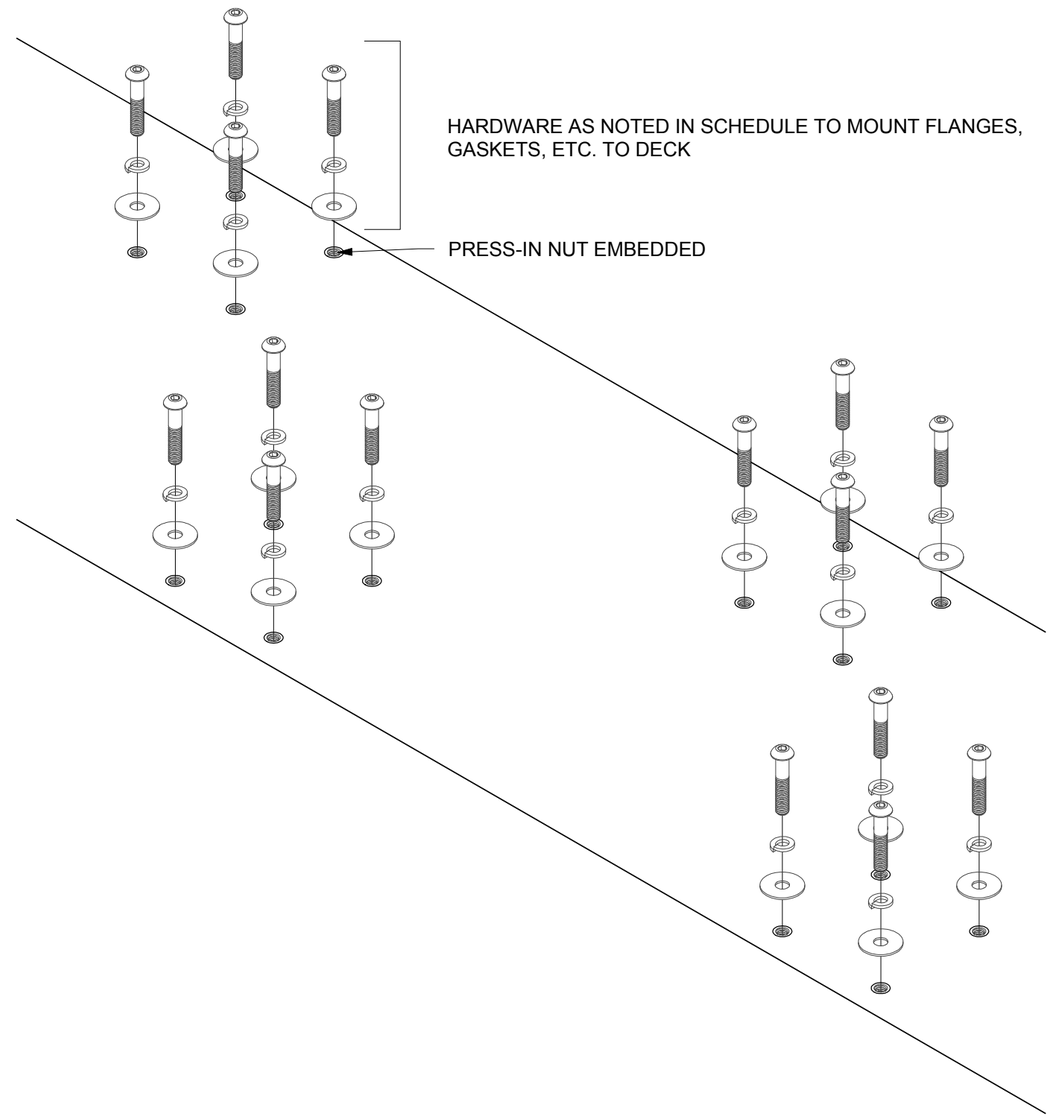

NOTE: ALL CUT FILES TO BE SUPPLIED TO WINNING BIDDER
NOTE: MUST BE COMPLETED TO THE SATISFACTION OF METALAB STUDIO (SEE SPECS)

2 DECK ATTACHMENT METHOD

NO.	ISSUE	DATE
1	BID SET	2 August 2016

SAN ANTONIO RIVERBOATS
PROTOTYPE

[METALAB ARCHITECTURE]
20 N Sampson St
Houston, Texas 77003
713.426.3640
www.metalabstudio.com
info@metalabstudio.com
ARCHITECT

Gossen Yelton Design
Naval Architecture
3005 Carol Drive,
Kenner, Louisiana 70062
NAVAL ARCHITECT

SAR

SHEET SIZE: 12 X 18
SCALE AS NOTED

BID SET
NOT FOR CONSTRUCTION

DECK HARDWARE SCHEDULE AND ATTACHMENT METHOD

D-4

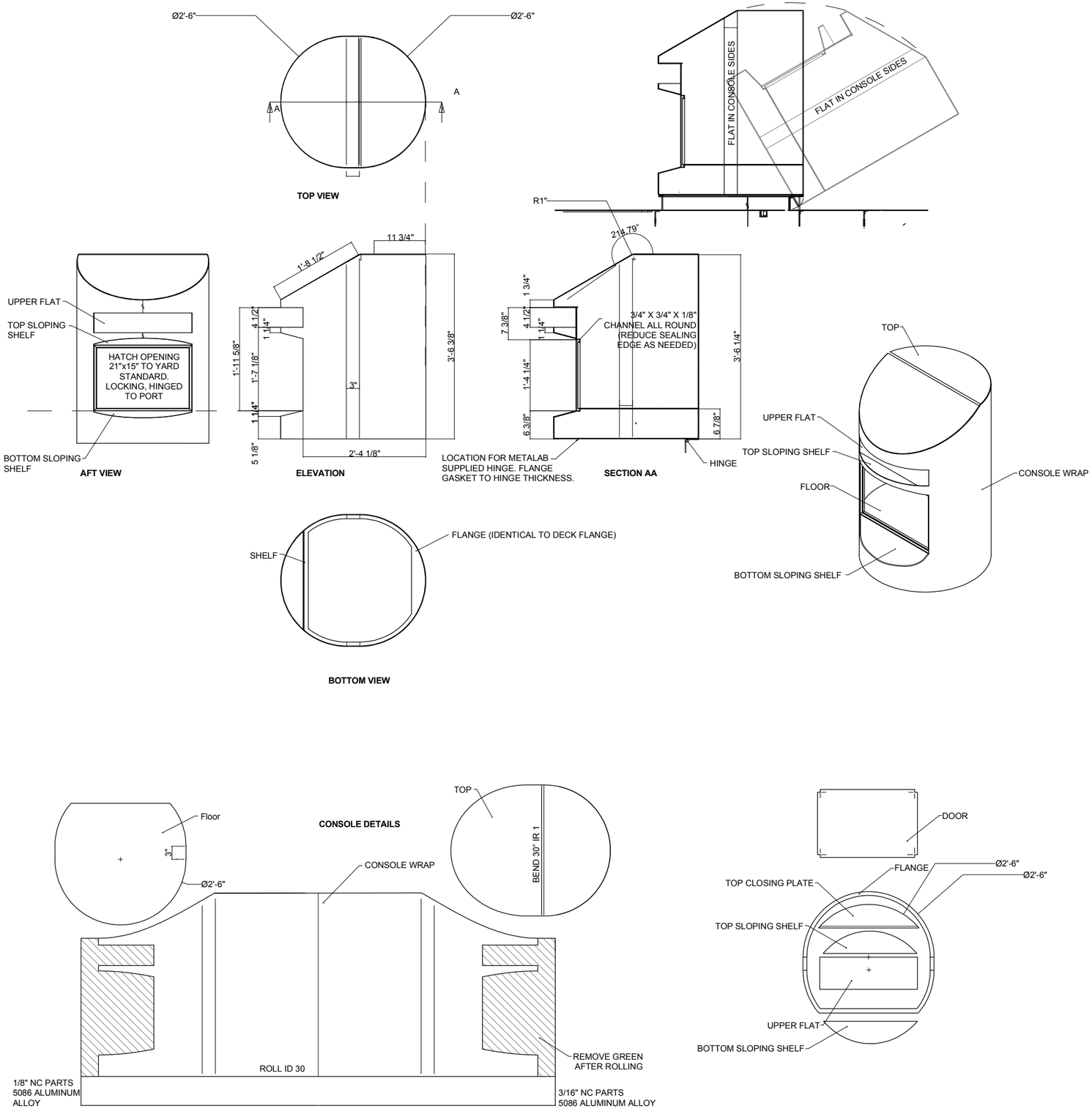

1 CONSOLE CUT FILES AND DETAILS 1:12

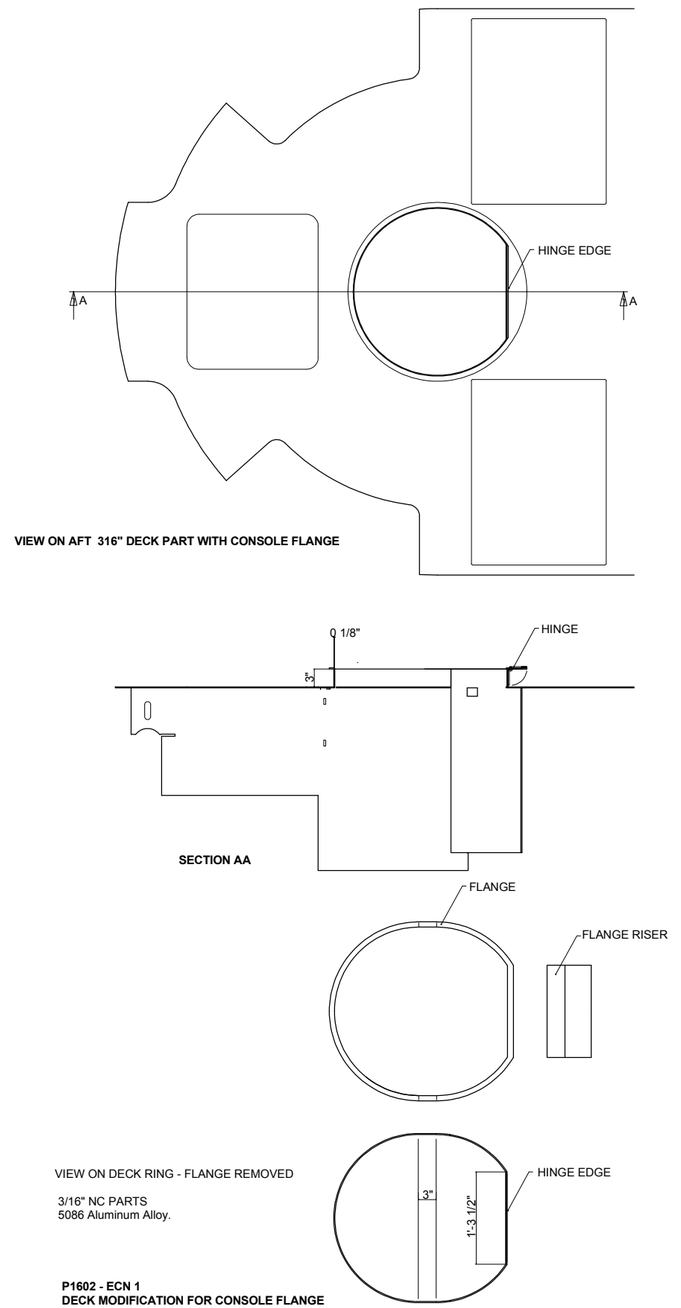

VIEW ON DECK RING - FLANGE REMOVED

3/16" NC PARTS
5086 Aluminum Alloy.

P1602 - ECN 1
DECK MODIFICATION FOR CONSOLE FLANGE

NOTE:

PRE-WELD THE FLAT RISER TO THE DECK INSERT AND EXISTING RISER PRIOR TO WELDING THE DECK INSERT TO THE DECK.

GENERAL NOTES:

1. CONSOLE STRUCTURAL ASSEMBLY ONLY.
2. WELD FULLY.
3. THE METALAB HINGE IS A WELDABLE PIANO HINGE.

NOTE: ALL CUT FILES TO BE SUPPLIED TO WINNING BIDDER
NOTE: MUST BE COMPLETED TO THE SATISFACTION OF METALAB STUDIO (SEE SPECS)

2 CONSOLE SECTION AND DETAILS 1:12

NO.	ISSUE	DATE
1	BID SET	2 August 2016

SAN ANTONIO RIVERBOATS
PROTOTYPE

[METALAB ARCHITECTURE]
20 N Sampson St
Houston, Texas 77003
713.426.3640
www.metalabstudio.com
info@metalabstudio.com
ARCHITECT

Gerald Nelson Design
Naval Architecture
3005 Canal Drive,
New Orleans, La.
Louisiana 70130
NAVAL ARCHITECT

SAR

SHEET SIZE: 12 X 18
SCALE AS NOTED

BID SET
NOT FOR CONSTRUCTION

CONSOLE SECTION, DETAILS AND CUT FILE

C-1

ACCESSORY MOUNTING SCHEDULE

DRAWING	DESCRIPTION	TOTAL
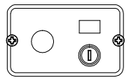	Bilge Pump Switch See Sheet A-1, Item 1-2	2
	Bow Navigation Pack See Sheet A-1, Item 4	1
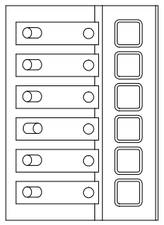	Electric Switch Panel See Sheet A-1, Item 7	1
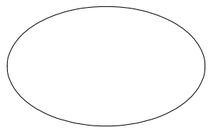	Bow Navigation Pack See Sheet A-1, Item 8-9	1
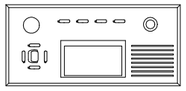	VHF Radio See Sheet A-1, Item 11	1
	VHF Radio Antenna See Sheet A-1, Item 12	1
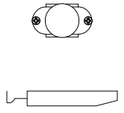	12V Accessory Plug See Sheet A-1, Item 13	1
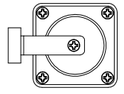	Easy Lock Inlet See Sheet A-1, Item 14	1

ACCESSORY MOUNTING SCHEDULE

DRAWING	DESCRIPTION	TOTAL
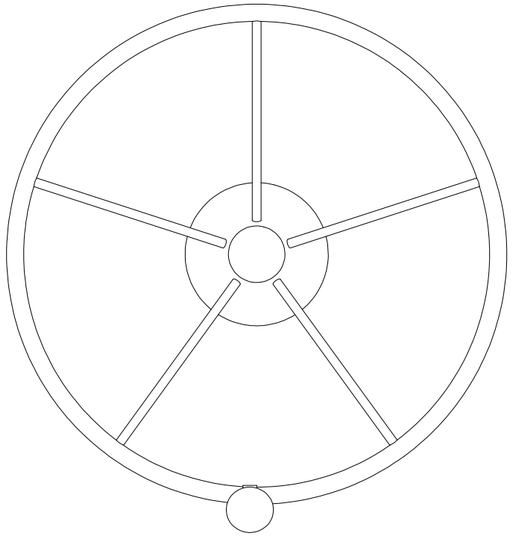	Steering Wheel See Sheet A-1, Item 15-16	1
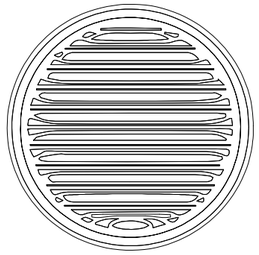	Chrome Marine Speakers See Sheet A-1, Item 17	2
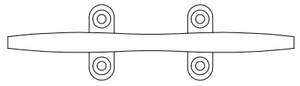	Eye Cleat (8") See Sheet A-1, Item 18	4
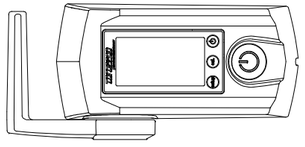	Torqeedo Throttle See Sheet E-1 to E-4	1

1 ACCESSORY MOUNTING SCHEDULE

NO.	ISSUE	DATE
1	BID SET	2 August 2016

SAN ANTONIO RIVERBOATS
PROTOTYPE

[METALAB ARCHITECTURE]
20 N Sampson St
Houston, Texas 77003
713.426.3640
www.metalabstudio.com
info@metalabstudio.com
ARCHITECT

Gonzalez Holzer, Design
Architecture & Planning
3005 Carol Drive,
Metairie, Louisiana 70001
NAVAL ARCHITECT

SAR

SHEET SIZE: 12 X 18
SCALE AS NOTED

BID SET
NOT FOR CONSTRUCTION

CONSOLE
MOUNTING
SCHEDULE

C-2

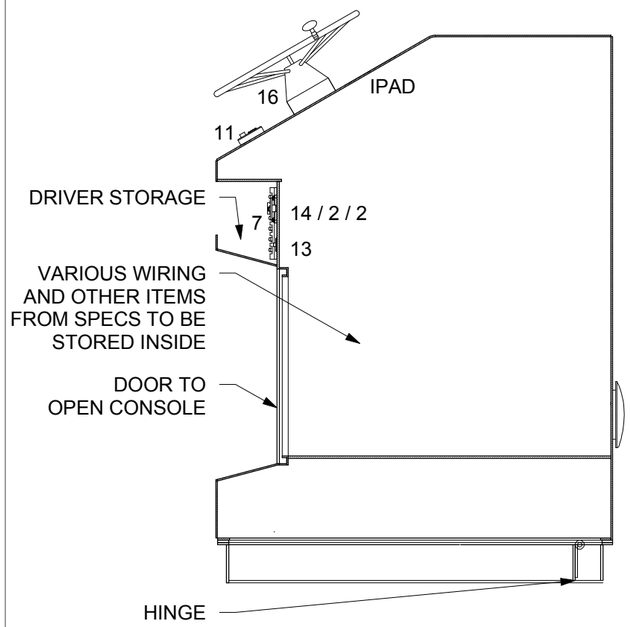

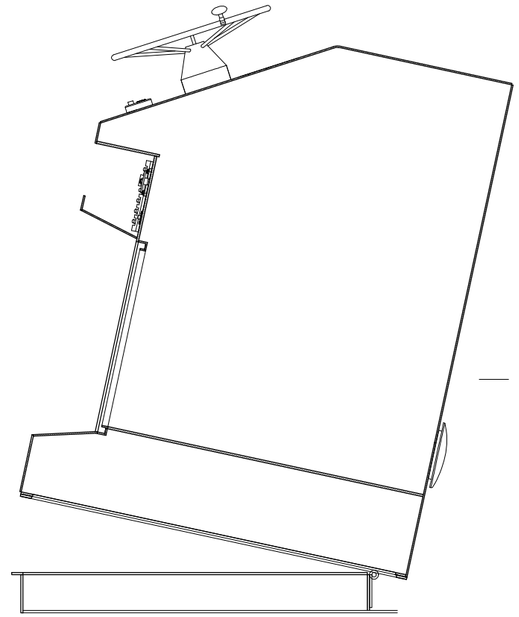

2 CONSOLE SECTION AND HINGING DETAIL 1:12

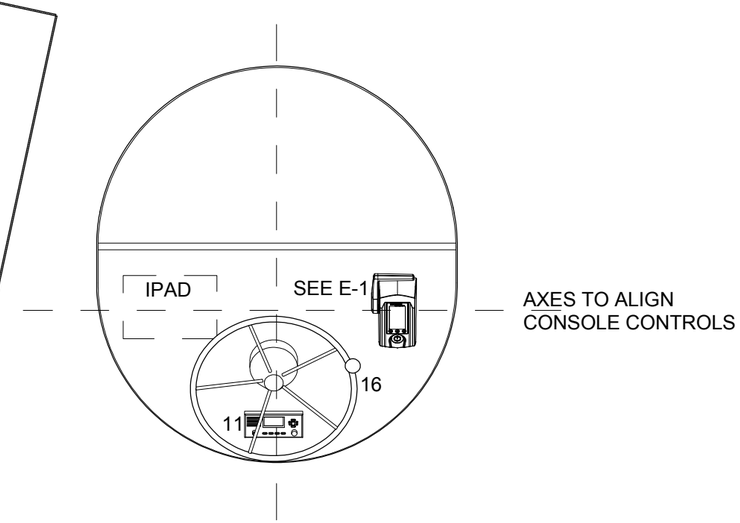

3 CONSOLE PLAN 1:12

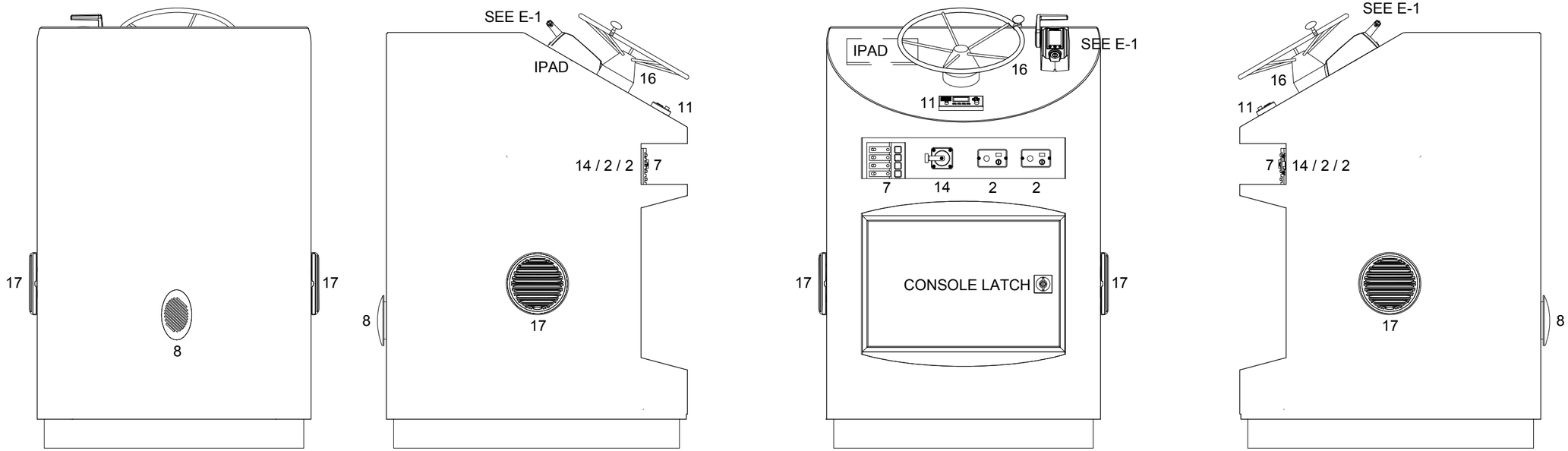

BACK VIEW

LEFT VIEW

FRONT VIEW

RIGHT VIEW

1 CONSOLE 4 SIDED VIEW 1:12

NOTE: ALL CUT FILES TO BE SUPPLIED TO WINNING BIDDER
NOTE: MUST BE COMPLETED TO THE SATISFACTION OF METALAB STUDIO (SEE SPECS)

NO.	ISSUE	DATE
1	BID SET	2 August 2016

SAN ANTONIO RIVERBOATS
PROTOTYPE

[METALAB ARCHITECTURE]
20 N Sampson St
Houston, Texas 77003
713.426.3640
www.metalabstudio.com
info@metalabstudio.com
ARCHITECT

Gunn Yacht Design
Gunn Yacht Design
300E Gum Drive
Slidell, Louisiana 70458
(985)643-7030
NAVAL ARCHITECT

SAR

SHEET SIZE: 12 X 18
SCALE AS NOTED

BID SET
NOT FOR CONSTRUCTION

CONSOLE ACCESSORY MOUNTING ASSEMBLY DRAWINGS

C-3

LIST OF EQUIPMENT (NUMBERS LISTED PER BOAT)

ITEM	DESCRIPTION	PART NUMBER	TOTAL #
1	Bilge Pump	Rule RM750A (12v)	2
2	Bilge Pump Switch	Rule #41 (12v)	2
3	T-H Marine Thru-Hull Fitting	750 DP	2
4	Bow Navigation Light Pack (P&S)	SeaDog #400070-1	1
5	Transom Light	Marpac #7-6577	1
6	Bilge Hoses (5ft each)	MPI 5120	2
7	Electric Switch Panel (6 Gang)	Blue Sea #4376	1
8	Horn	FIAMM #51905	1
9	Horn Button	Marpac #7-0487	1
10	Inline Fuse	Marland #2011-12-200	1
11	VHF Radio	LowranceLink-5 DSC Marine Radio	1
12	VHF Radio Antenna	Shakespeare 5215-AIS	1
13	12v Accesory Plug	Marland #5250C	1
14	Easy Lock Inlet	Marinco #6371EL-B	1
15	Steering System	Seastar #SS-137	1
16	Steering Wheel w/ Knob	Marpac #7-0248	1
17	Chrome Marine Speakers	Aquatic AV AQ-SPK6.5-4LC	2
18	Eye Cleat (8")	McMaster-Carr 3385T22	4
19	LED Rim Lighting	Vivid Pixel	1
20	Ramp / Wear Mat	See A-2	1

1 LIST OF EQUIPMENT (SEE SPEC SHEETS)

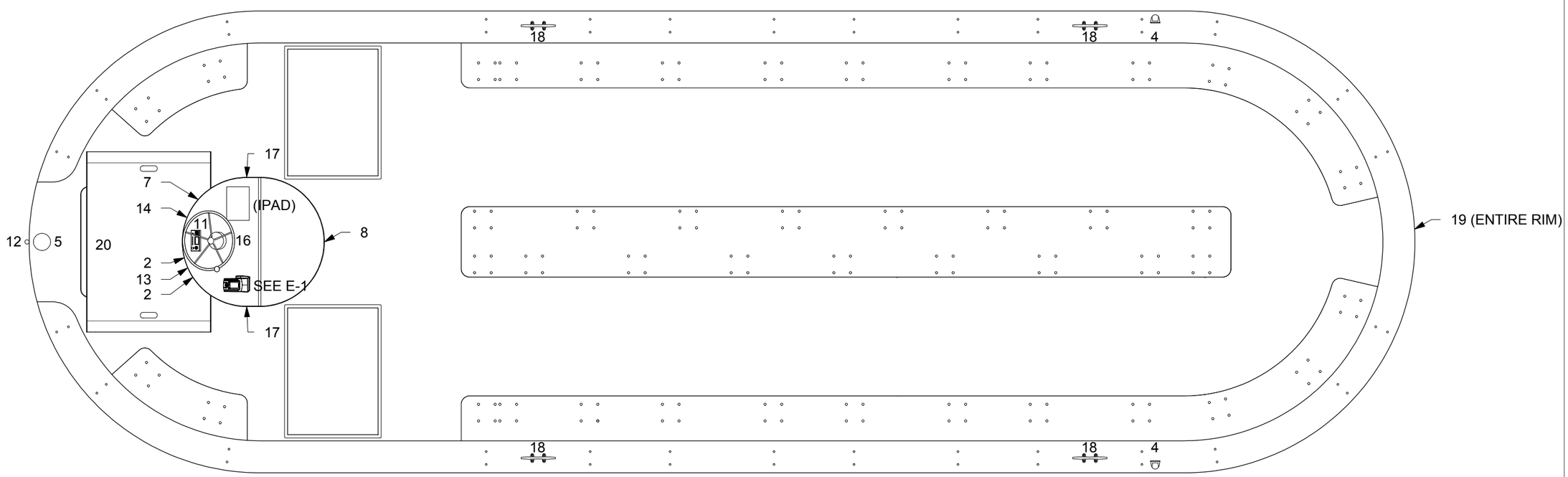

1 ACCESSORY PLAN 1:24

NOTE: MUST BE COMPLETED TO THE SATISFACTION OF METALAB STUDIO (SEE SPECS)

NO.	ISSUE	DATE
1	BID SET	2 August 2016

SAN ANTONIO RIVERBOATS
PROTOTYPE

[METALAB ARCHITECTURE]
20 N Sampson St
Houston, Texas 77003
713.426.3640
www.metalabstudio.com
info@metalabstudio.com
ARCHITECT

Gregory Marine Design
Naval Architecture
3005 Canal Drive,
Kenner, LA 70062
(504)466-7030
NAVAL ARCHITECT

SAR

SHEET SIZE: 12 X 18
SCALE AS NOTED

BID SET
NOT FOR CONSTRUCTION

ACCESSORY PLAN AND SCHEDULE

A-1

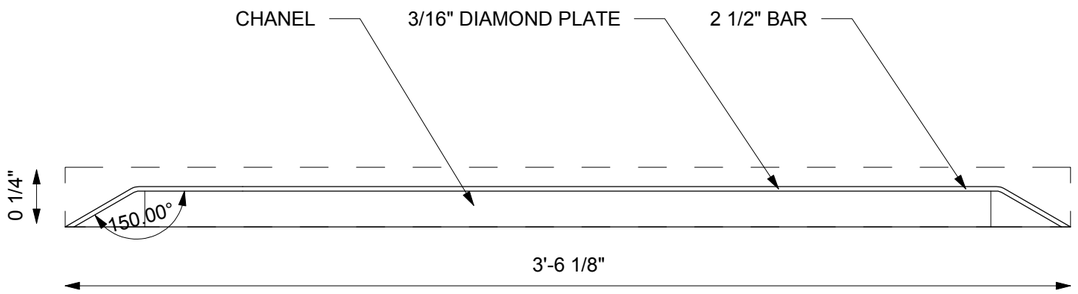

2 RAMP SECTION 1:12

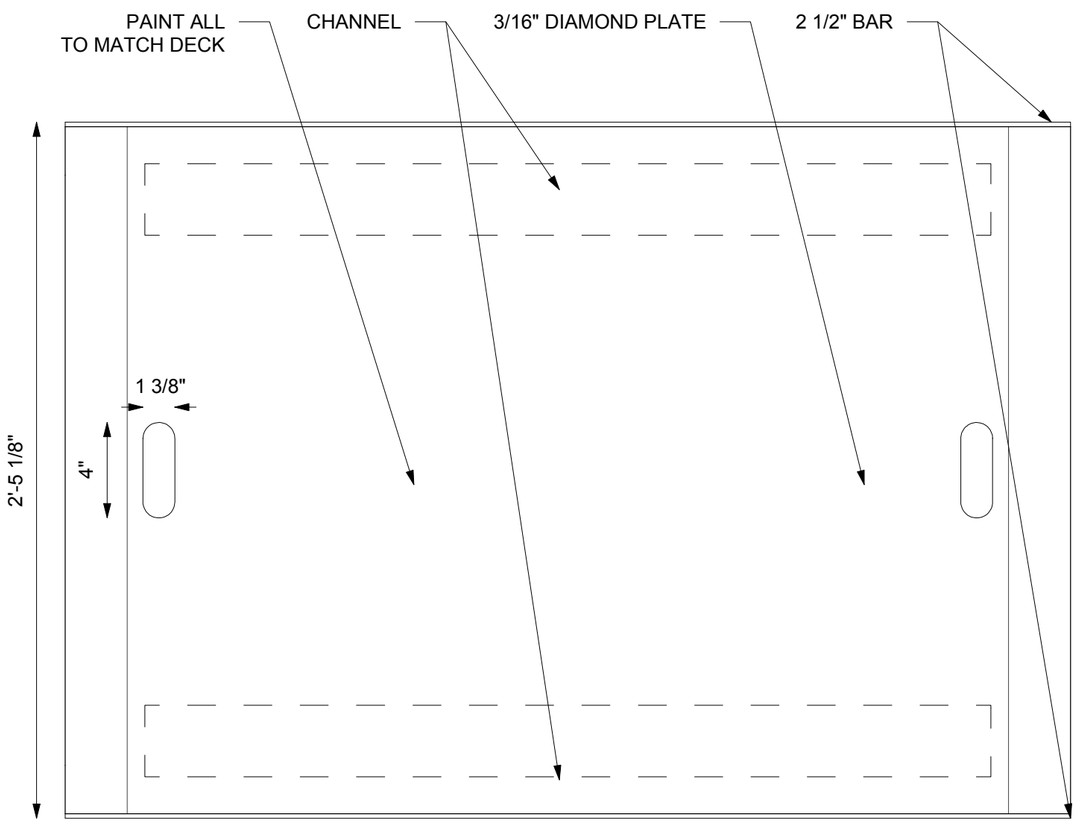

1 RAMP PLAN 1:12

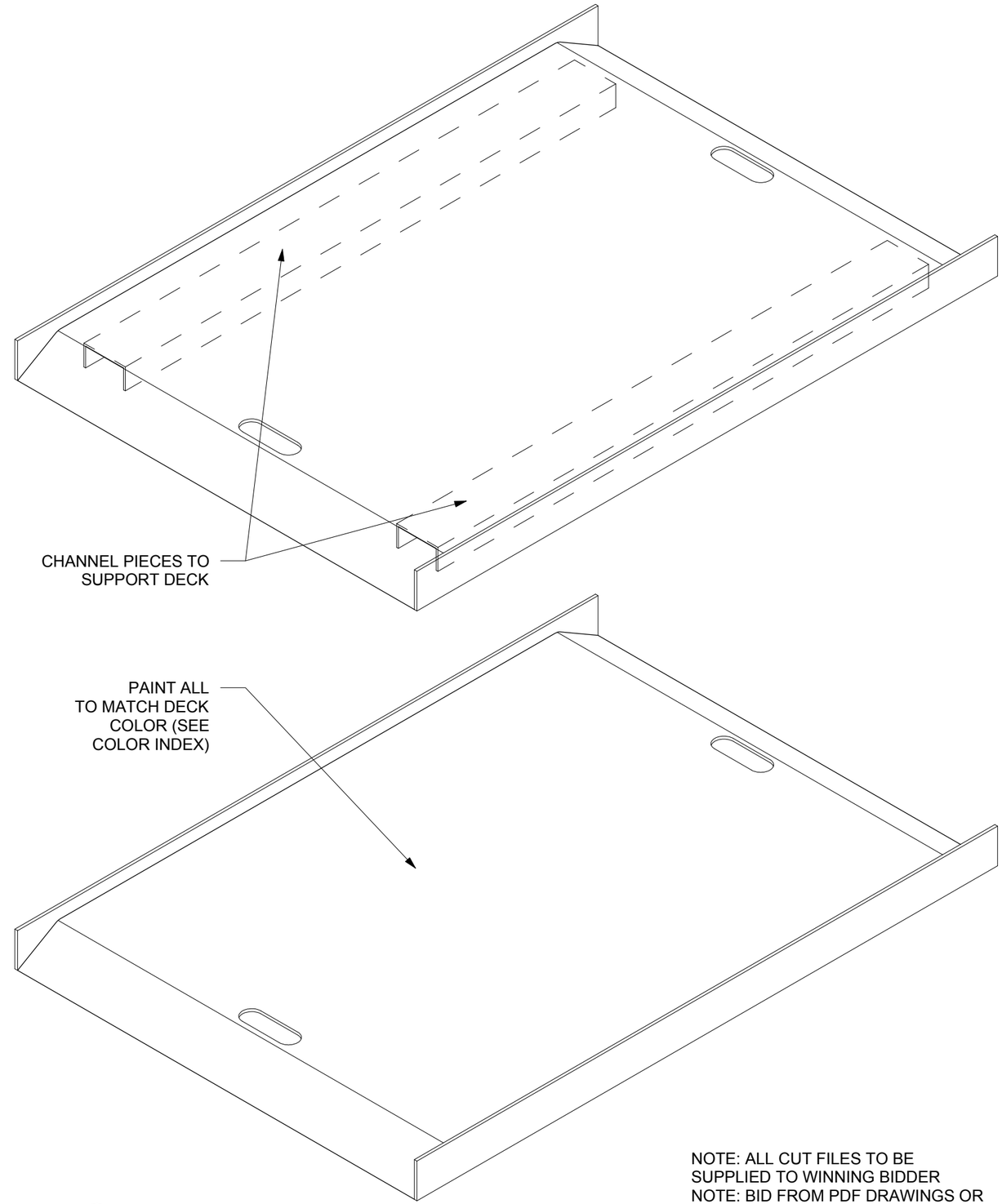

3 RAMP ASSEMBLY 1:12

NOTE: ALL CUT FILES TO BE SUPPLIED TO WINNING BIDDER
NOTE: BID FROM PDF DRAWINGS OR
NOTE: MUST BE COMPLETED TO THE SATISFACTION OF METALAB STUDIO (SEE SPECS)

NO.	ISSUE	DATE
1	BID SET	2 August 2016

SAN ANTONIO RIVERBOATS
PROTOTYPE

[METALAB ARCHITECTURE]
20 N Sampson St
Houston, Texas 77003
713.426.3640
www.metalabstudio.com
info@metalabstudio.com
ARCHITECT

Gensler Houston, Design Architects, P.C.
3001 Caroll Drive, Suite 700
Houston, Texas 77339
NAVAL ARCHITECT

SAR

SHEET SIZE: 12 X 18
SCALE AS NOTED

BID SET
NOT FOR CONSTRUCTION

RAMP ASSEMBLY DRAWINGS

A-2

FOR INFORMATION AND COMPONENTS RELATED TO
THE ELECTRIC PROPULSION SYSTEM, REFER TO SPECIFICATIONS

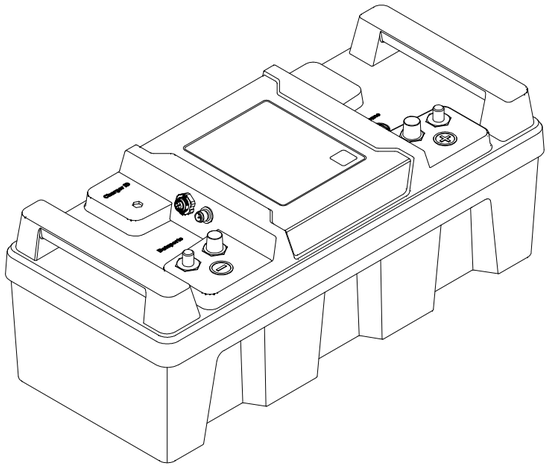

TORQEEDO BATTERY X 12

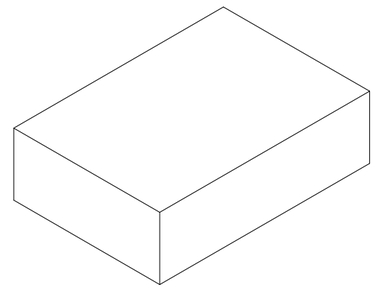

TORQEEDO CHARGER X 4 (SHOWN FOR RELATIVE SIZE)

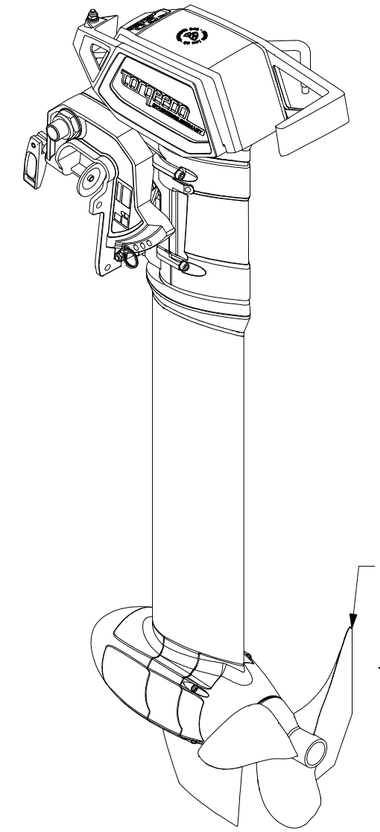

TORQEEDO MOTOR X 1

2 BATTERY AND CHARGER SCHEDULE 1:6

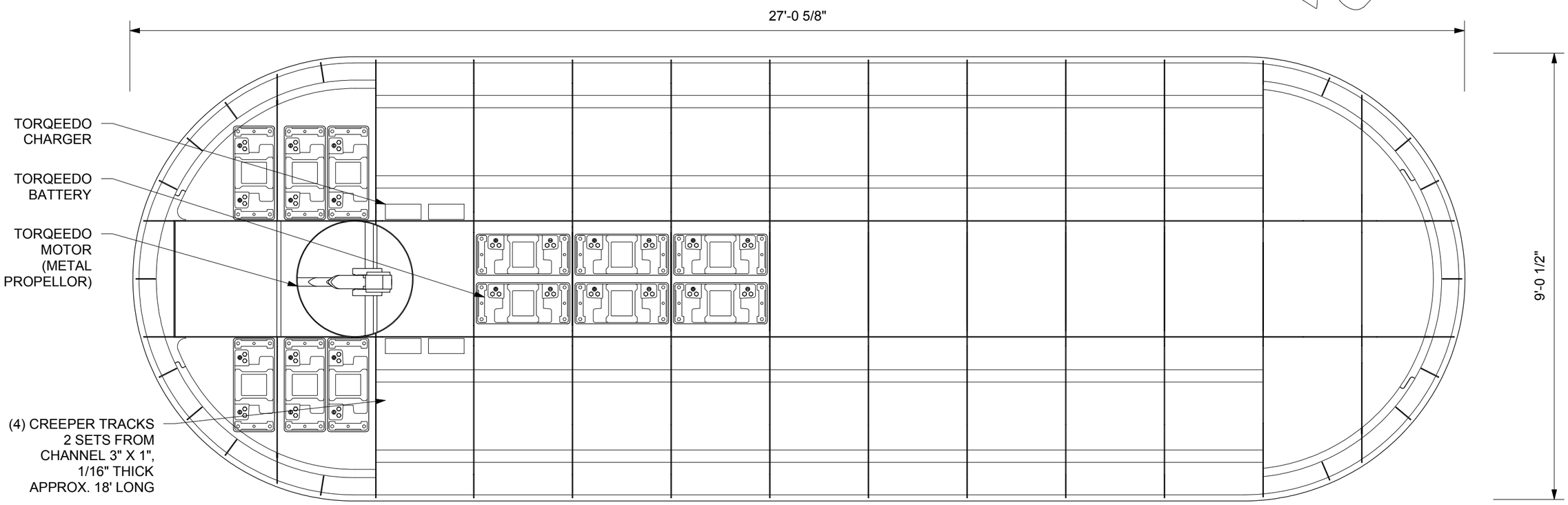

1 BATTERY AND CHARGER PLAN 1:24

NOTE: MUST BE COMPLETED TO THE SATISFACTION OF METALAB STUDIO (SEE SPECS)

NO.	ISSUE	DATE
1	BID SET	2 August 2016

SAN ANTONIO RIVERBOATS
PROTOTYPE

NAVAL ARCHITECT
Gregg Fisher, Design
Naval Architect
3005 Carol Drive,
Kingwood, Texas
United States 77339

ARCHITECT
[METALAB ARCHITECTURE]
20 N Sampson St
Houston, Texas 77003
713.426.3640
www.metalabstudio.com
info@metalabstudio.com

SAR

SHEET SIZE: 12 X 18
SCALE AS NOTED

BID SET
NOT FOR CONSTRUCTION

BATTERY AND CHARGER PLAN AND SCHEDULE

E-1

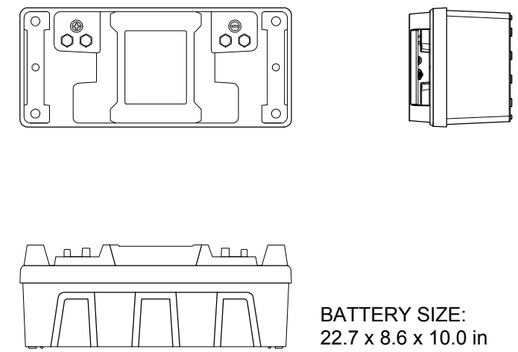

3 BATTERY DETAIL 1:12

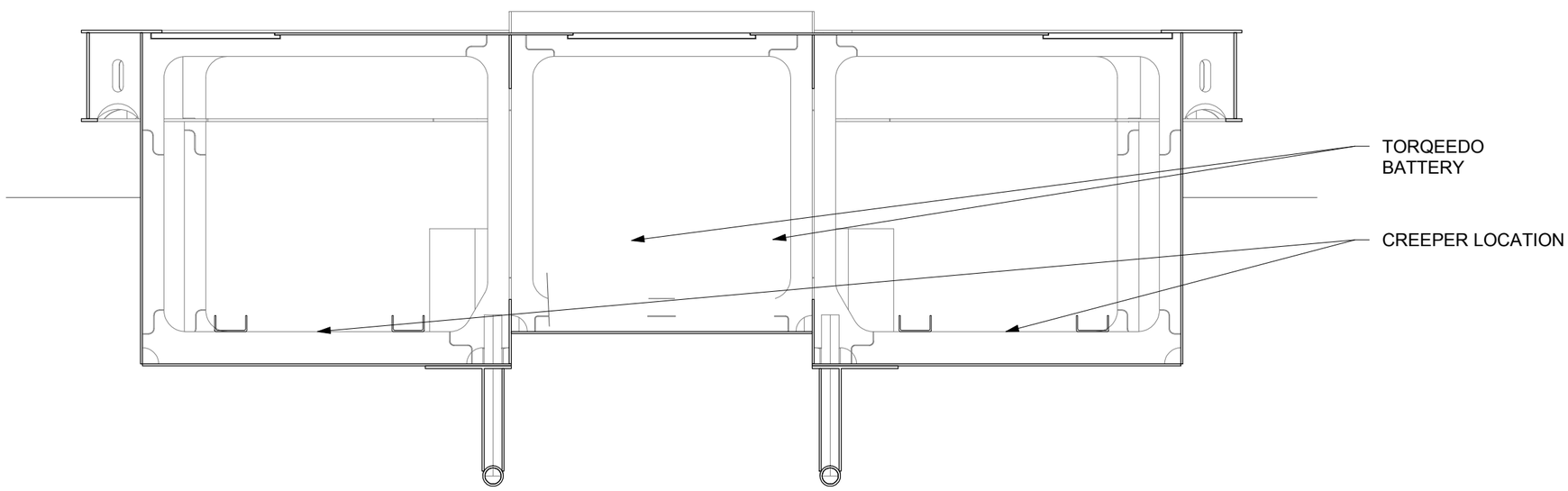

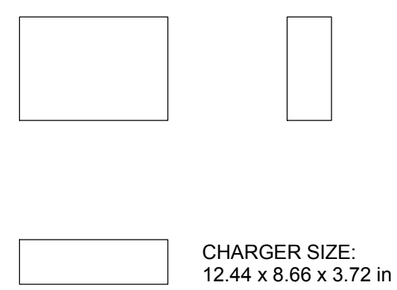

1 BATTERY HULL SECTION 1:12

2 CHARGER DETAIL 1:12

NO.	ISSUE	DATE
1	BID SET	2 August 2016

SAN ANTONIO RIVERBOATS
PROTOTYPE

[METALAB ARCHITECTURE]
20 N Sampson St
Houston, Texas 77003
713.426.3640
www.metalabstudio.com
info@metalabstudio.com
ARCHITECT

Gonzo Marine Design
Naval Architecture
3005 Canal Drive,
Kenner, Louisiana 70062
NAVAL ARCHITECT

SAR

SHEET SIZE: 12 X 18
SCALE AS NOTED

BID SET
NOT FOR CONSTRUCTION

BATTERY AND CHARGER SECTION AND DETAILS

E-2

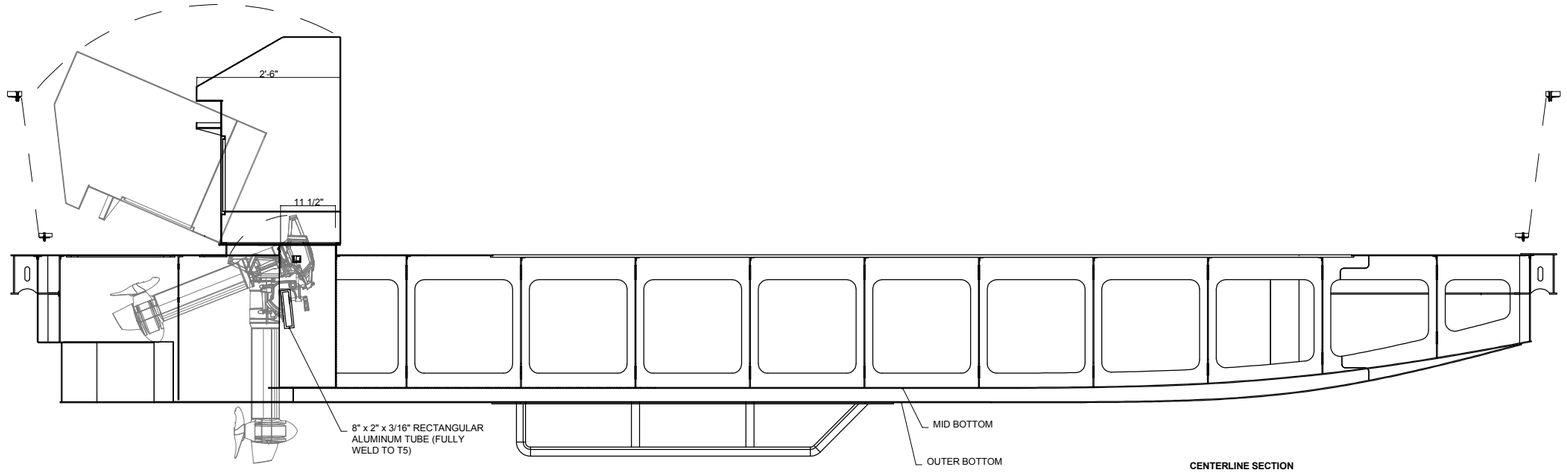

CENTERLINE SECTION

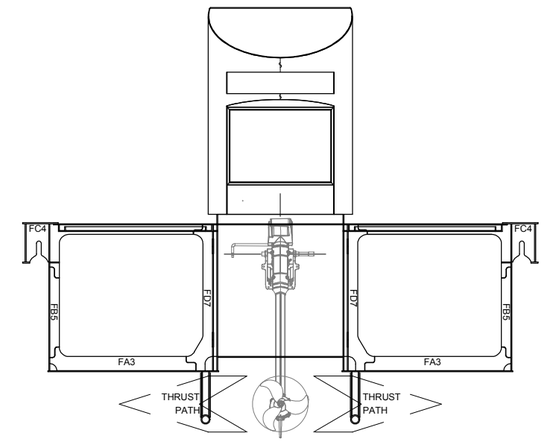

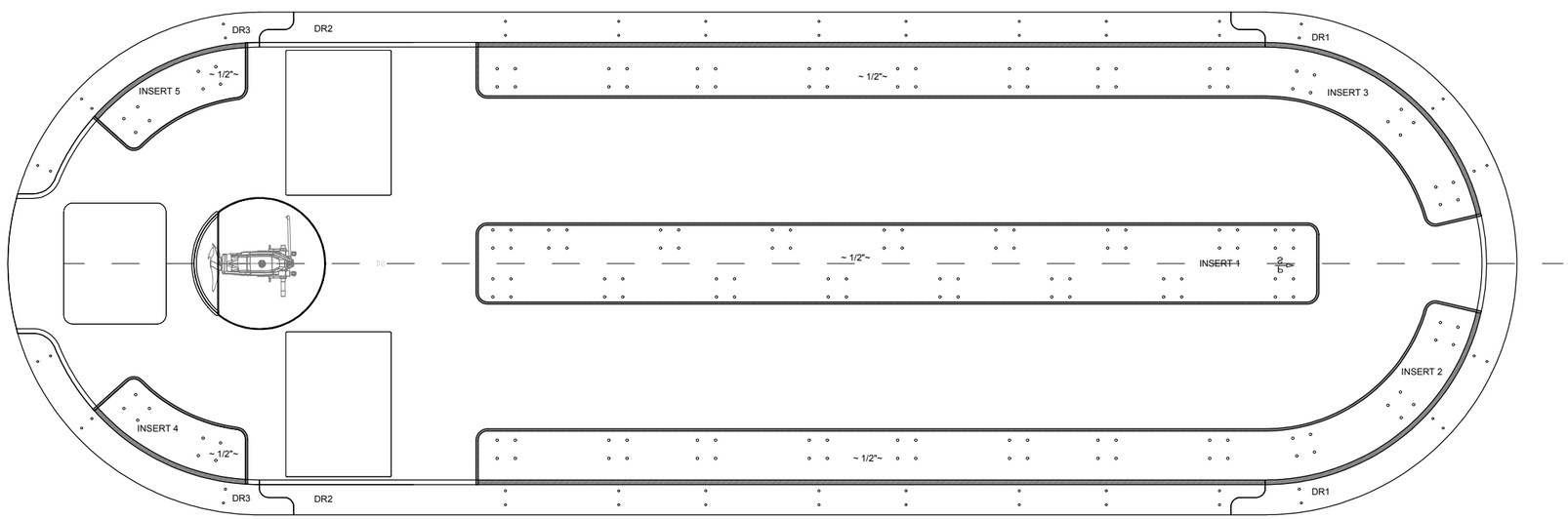

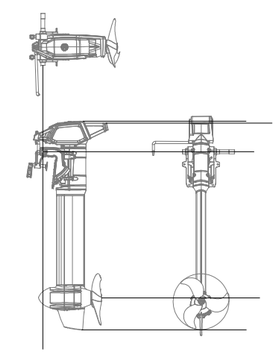

1 PROTOTYPE WELL ARRANGEMENT (REF ONLY) 1:30

NOTE: MUST BE COMPLETED TO THE SATISFACTION OF METALAB STUDIO (SEE SPECS)

NO.	ISSUE	DATE
1	BID SET	2 August 2016

SAN ANTONIO RIVERBOATS
PROTOTYPE

[METALAB ARCHITECTURE]
20 N Sampson St
Houston, Texas 77003
713.426.3640
www.metalabstudio.com
info@metalabstudio.com
ARCHITECT

Gregg Fabian Design
Naval Architecture
3005 Canal Drive,
New Orleans, LA
Louisiana 70130
NAVAL ARCHITECT

SAR

SHEET SIZE - 12 X 18
SCALE AS NOTED

BID SET
NOT FOR CONSTRUCTION

PROTOTYPE WELL ARRANGEMENT (REF ONLY)

E-3

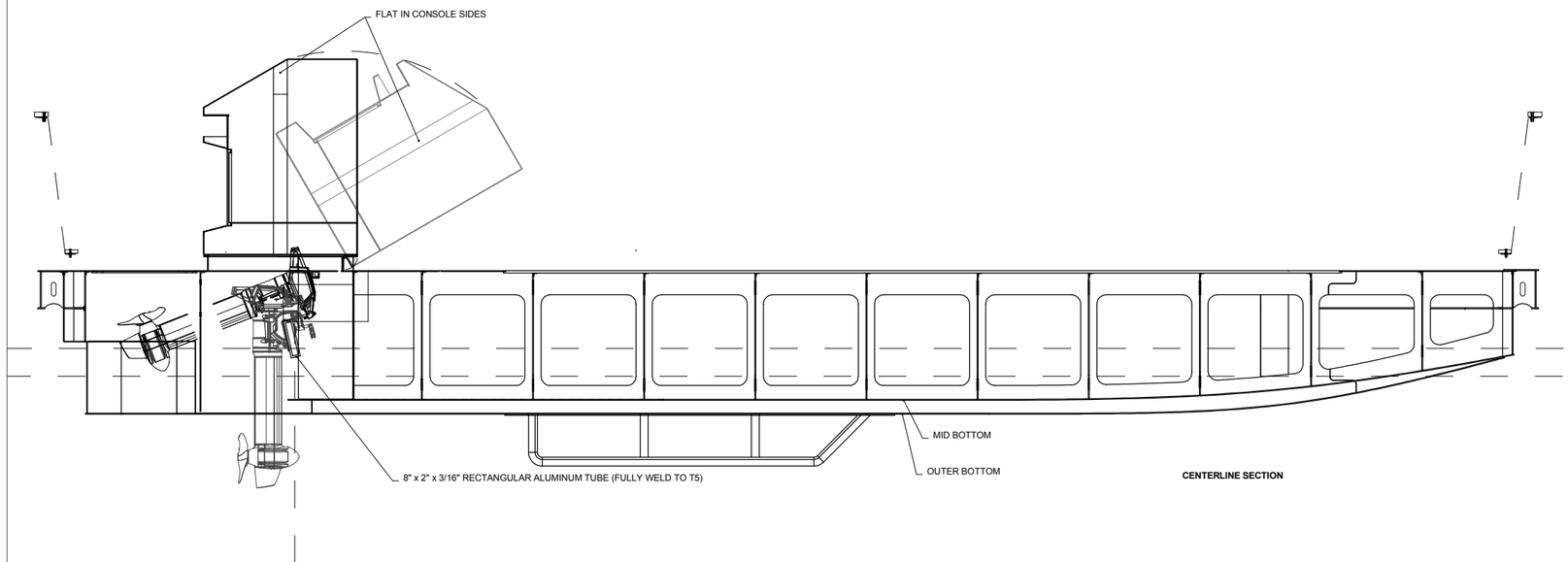

CENTERLINE SECTION

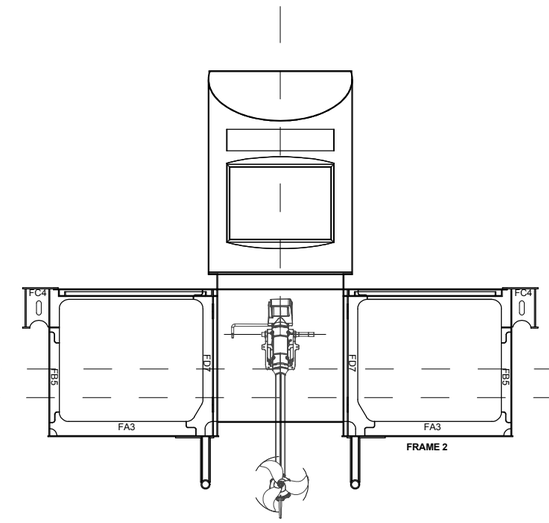

FRAME 2

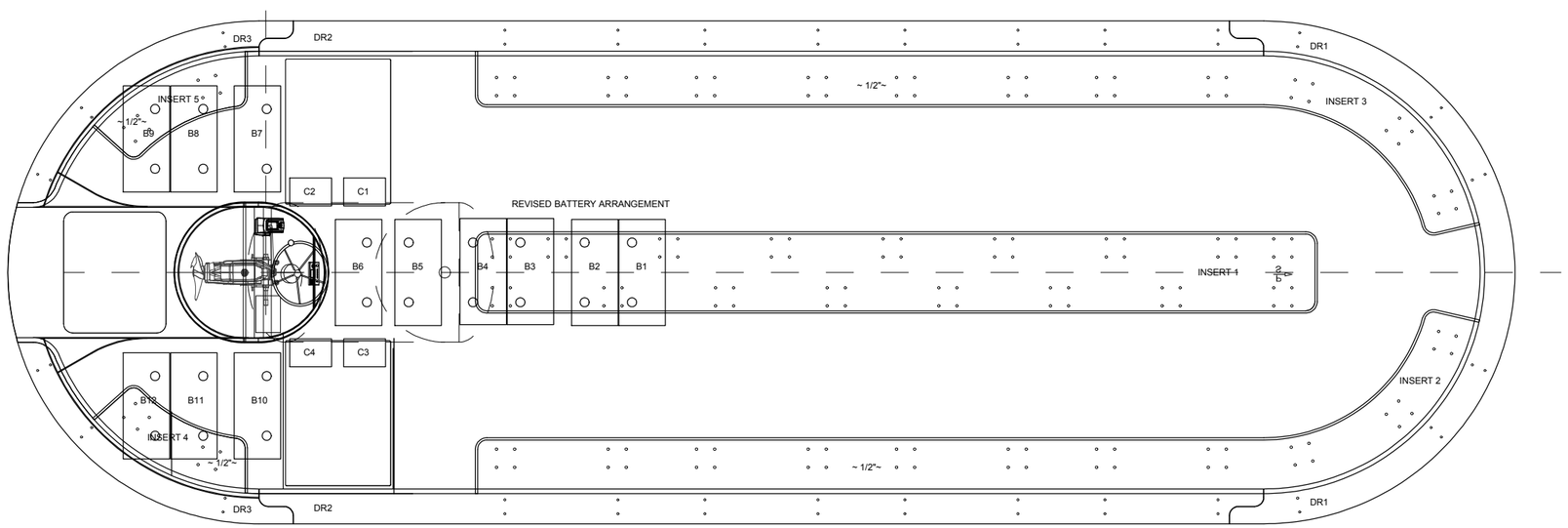

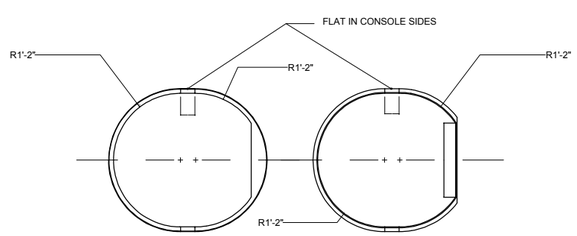

PLAN OF CONSOLE BASE

CONSOLE UPSTAND ON DECK

1 ELECTRIC WELL ARRANGEMENT 1:30

NOTE: MUST BE COMPLETED TO THE SATISFACTION OF METALAB STUDIO (SEE SPECS)

NO.	ISSUE	DATE
1	BID SET	2 August 2016

SAN ANTONIO RIVERBOATS
PROTOTYPE

[METALAB ARCHITECTURE]
20 N Sampson St
Houston, Texas 77003
713.426.3640
www.metalabstudio.com
info@metalabstudio.com
ARCHITECT

Gregg Fabian Design
Naval Architecture
3005 Carol Drive,
Kenner, Louisiana 70062
(504) 468-7830
NAVAL ARCHITECT

SAR

SHEET SIZE: 12 X 18
SCALE AS NOTED

BID SET
NOT FOR CONSTRUCTION

ELECTRIC WELL ARRANGEMENT

E-4

FOR INFORMATION AND COMPONENTS RELATED TO THE LIGHTING SYSTEM, REFER TO SPECIFICATIONS

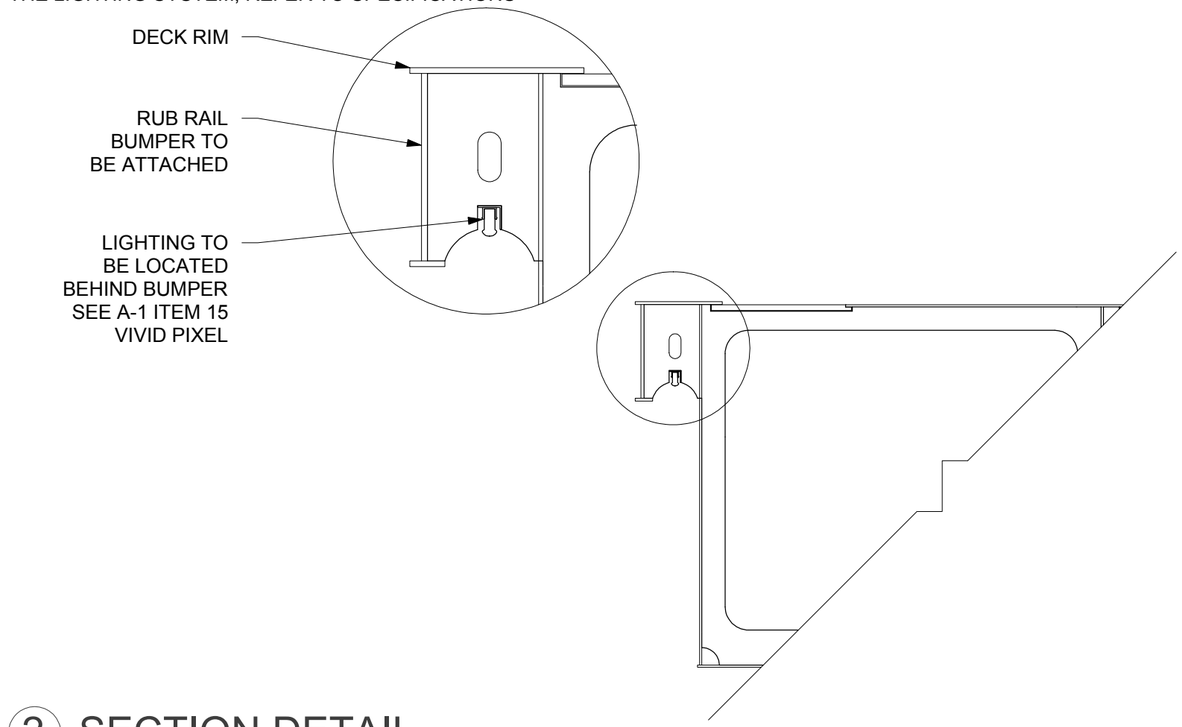

2 SECTION DETAIL

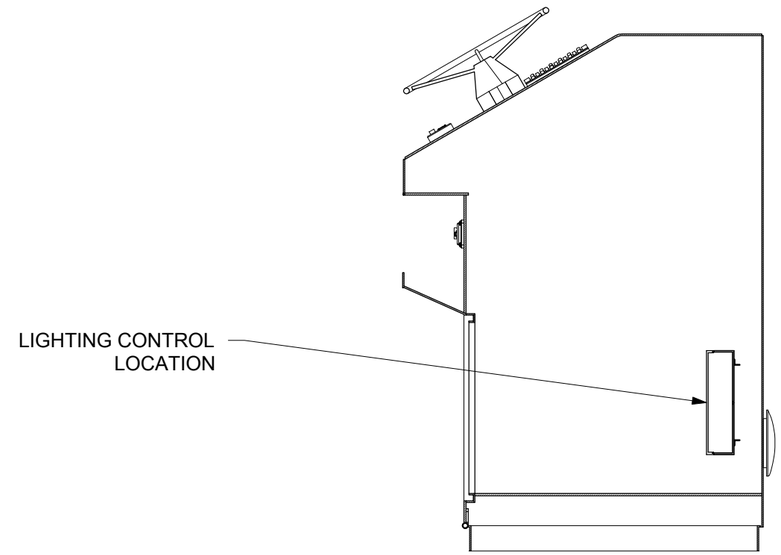

RIGHT VIEW OF CONSOLE

3 CONTROL DETAIL 1:12

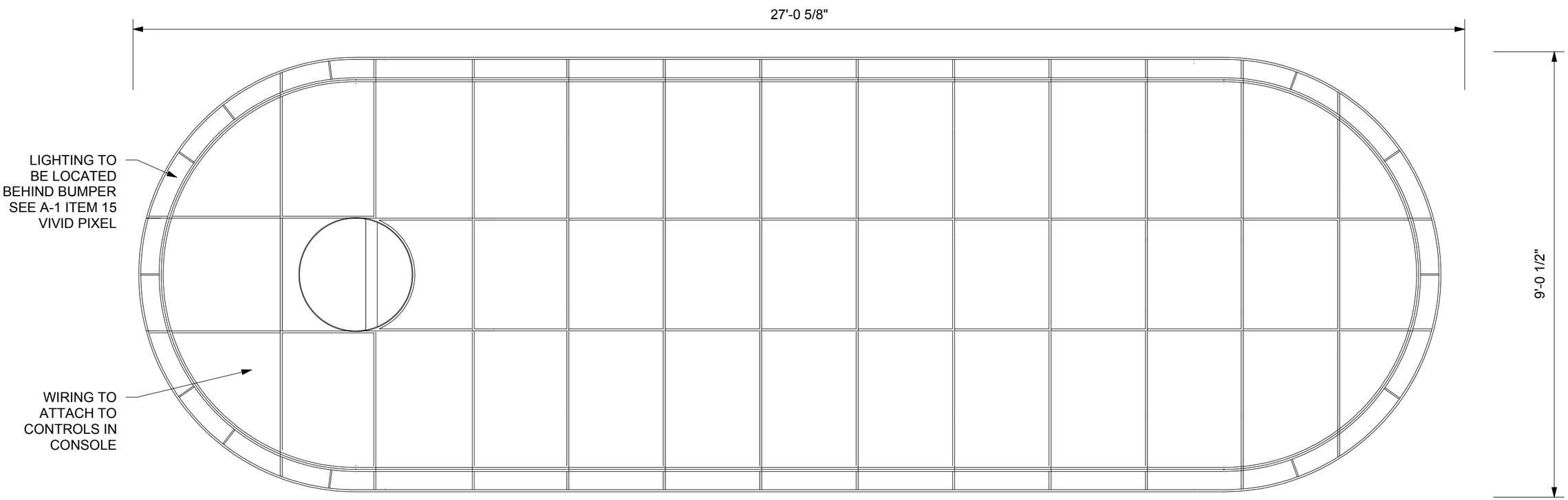

1 LIGHTING PLAN 1:24

NOTE: MUST BE COMPLETED TO THE SATISFACTION OF METALAB STUDIO (SEE SPECS)

NO.	ISSUE	DATE
1	BID SET	2 August 2016

SAN ANTONIO RIVERBOATS
PROTOTYPE

[METALAB ARCHITECTURE]
20 N Sampson St
Houston, Texas 77003
713.426.3640
www.metalabstudio.com
info@metalabstudio.com
ARCHITECT

Gossen Hobbs Design Associates, Inc.
3005 Canal Drive, Port Arthur, Texas 77640 (409)983-2030
NAVAL ARCHITECT

SAR

SHEET SIZE: 12 X 18
SCALE AS NOTED

BID SET
NOT FOR CONSTRUCTION

LIGHTING PLAN AND LIGHTING DETAILS

E-5

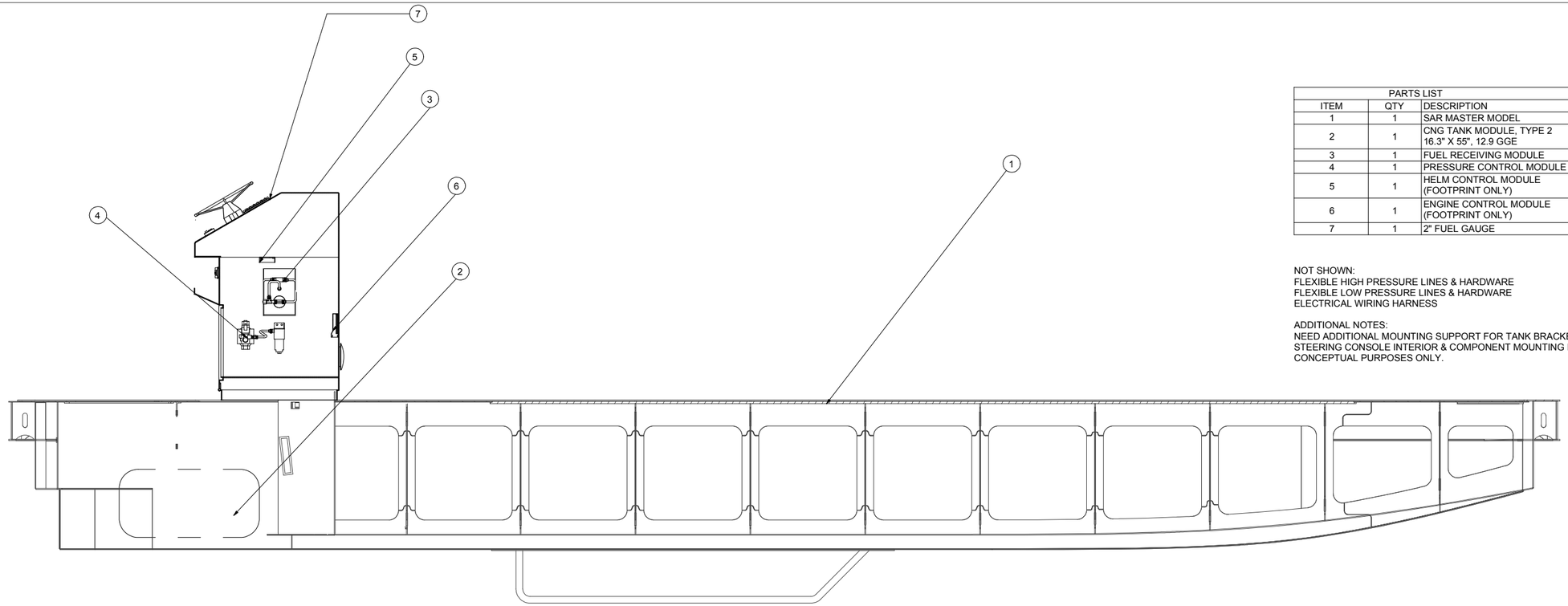

2 CNG SECTION 1:24

PARTS LIST		
ITEM	QTY	DESCRIPTION
1	1	SAR MASTER MODEL
2	1	CNG TANK MODULE, TYPE 2 16.3" X 55", 12.9 GGE
3	1	FUEL RECEIVING MODULE
4	1	PRESSURE CONTROL MODULE
5	1	HELM CONTROL MODULE (FOOTPRINT ONLY)
6	1	ENGINE CONTROL MODULE (FOOTPRINT ONLY)
7	1	2" FUEL GAUGE

NOT SHOWN:
FLEXIBLE HIGH PRESSURE LINES & HARDWARE
FLEXIBLE LOW PRESSURE LINES & HARDWARE
ELECTRICAL WIRING HARNESS

ADDITIONAL NOTES:
NEED ADDITIONAL MOUNTING SUPPORT FOR TANK BRACKETS TO RIB STRUCTURE
STEERING CONSOLE INTERIOR & COMPONENT MOUNTING IS SHOW FOR CONCEPTUAL PURPOSES ONLY.

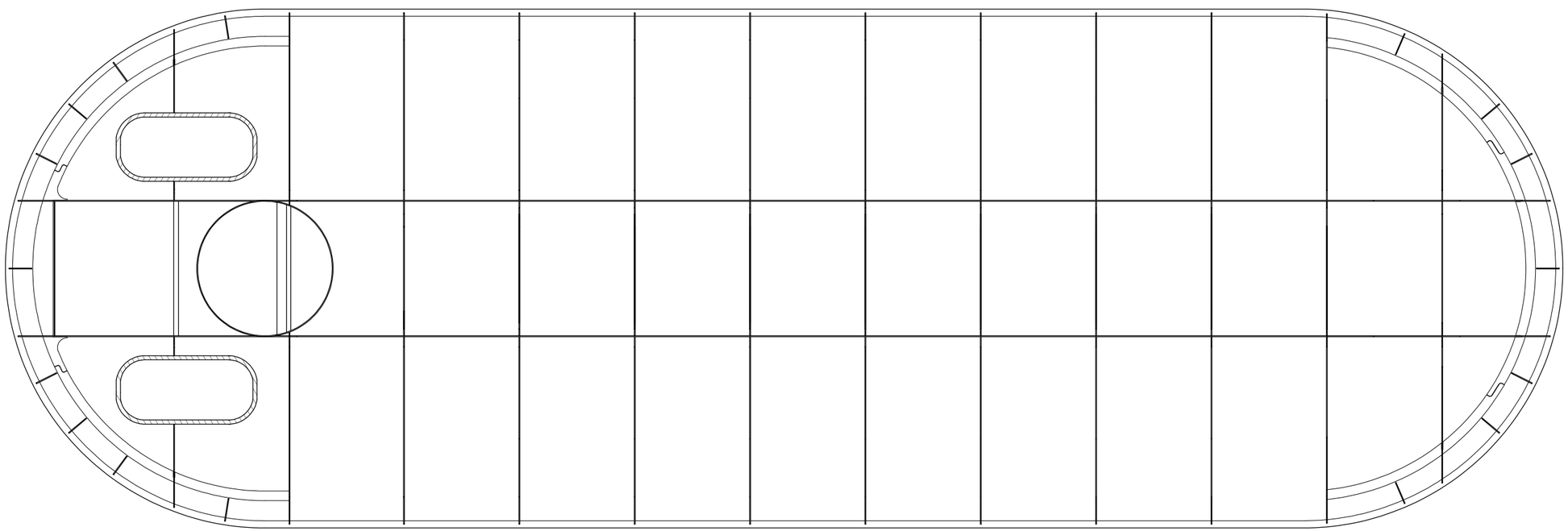

1 CNG PLAN 1:24

NOTE: MUST BE COMPLETED TO THE SATISFACTION OF METALAB STUDIO (SEE SPECS)

NO.	ISSUE	DATE
1	BID SET	2 August 2016

SAN ANTONIO RIVERBOATS
PROTOTYPE

[METALAB ARCHITECTURE]
20 N Sampson St
Houston, Texas 77003
713.426.3640
www.metalabstudio.com
info@metalabstudio.com
ARCHITECT

Gunn Yates Design
Naval Architecture
3005 Canal Drive,
New Orleans, La
Louisiana 70130
NAVAL ARCHITECT

SAR

SHEET SIZE: 12 X 18
SCALE AS NOTED

BID SET
NOT FOR CONSTRUCTION

CNG PLAN
AND SECTION

N-1

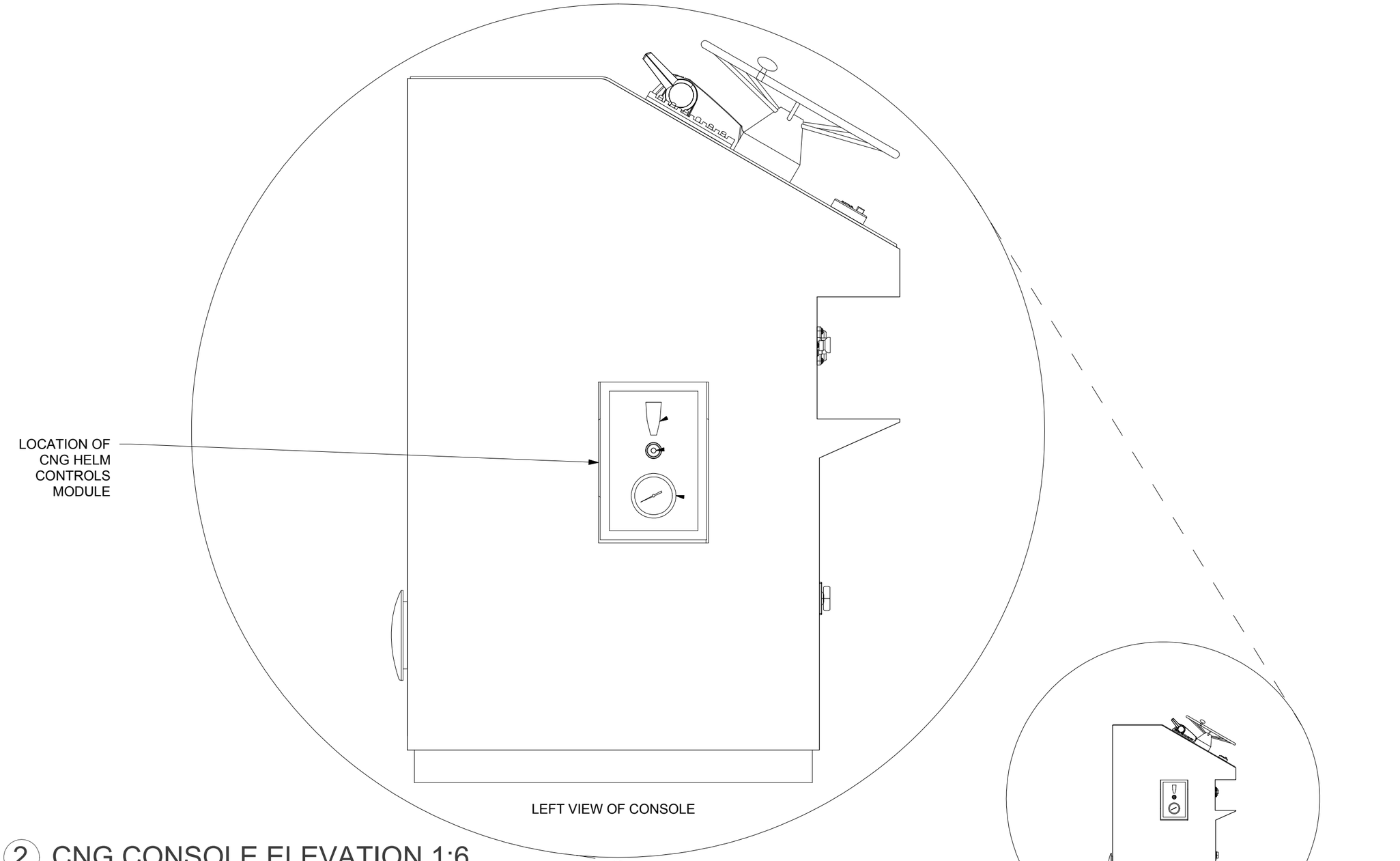

2 CNG CONSOLE ELEVATION 1:6

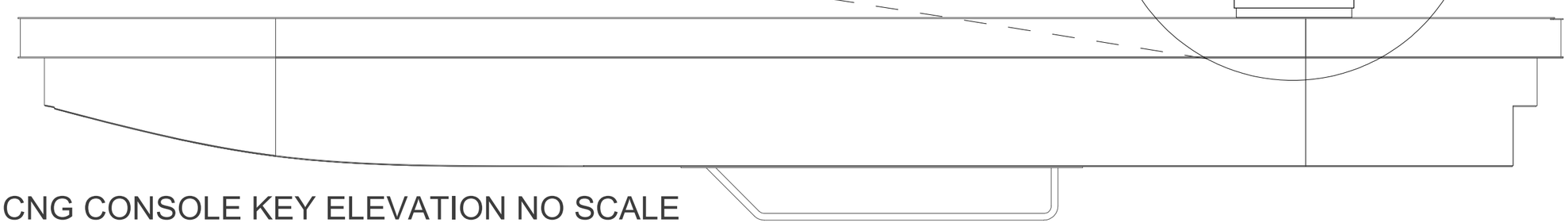

1 CNG CONSOLE KEY ELEVATION NO SCALE

NOTE: MUST BE COMPLETED TO THE SATISFACTION OF METALAB STUDIO (SEE SPECS)

NO.	ISSUE	DATE
1	BID SET	2 August 2016

SAN ANTONIO RIVERBOATS
PROTOTYPE

[METALAB ARCHITECTURE]
20 N Sampson St
Houston, Texas 77003
713.426.3640
www.metalabstudio.com
info@metalabstudio.com
ARCHITECT

Gunn Yacht Design
Gary Gunn, Jr.
300N Canal Drive,
Fort Lauderdale, Florida
Lauderdale 70116
NAVAL ARCHITECT

SAR

SHEET SIZE: 12 X 18
SCALE AS NOTED

BID SET
NOT FOR CONSTRUCTION

CNG CONSOLE
DETAIL

N-2

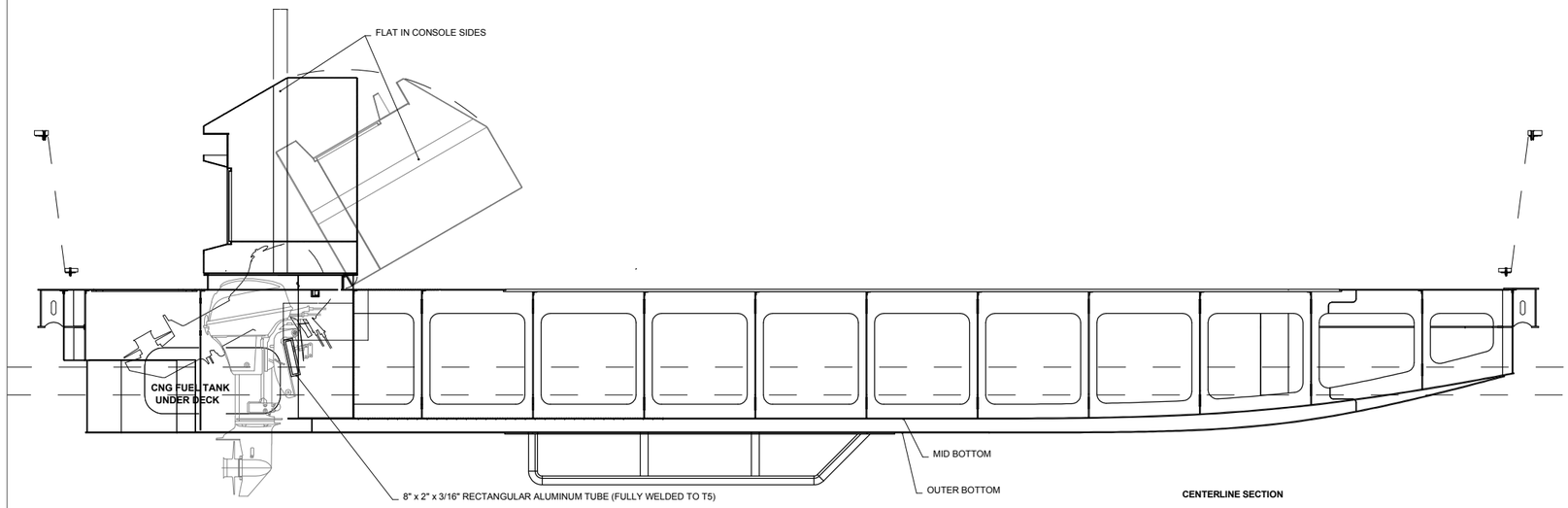

CENTERLINE SECTION

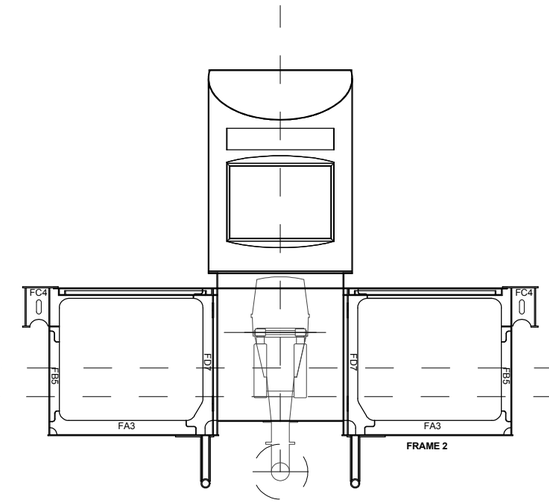

FRAME 2

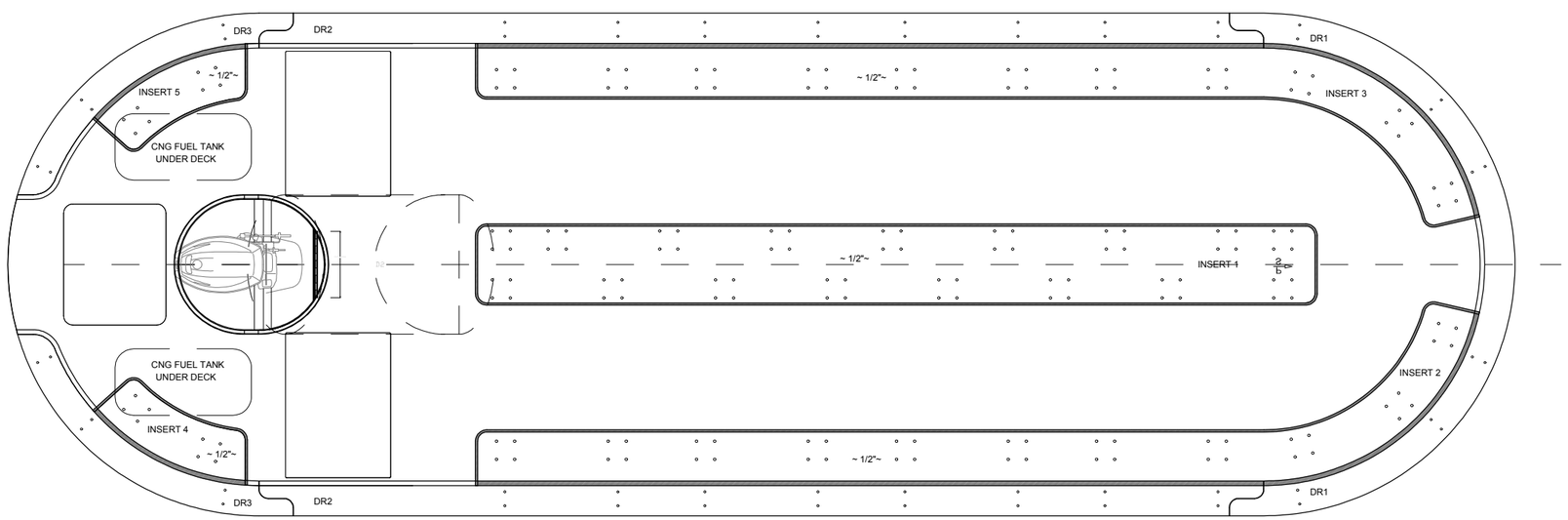

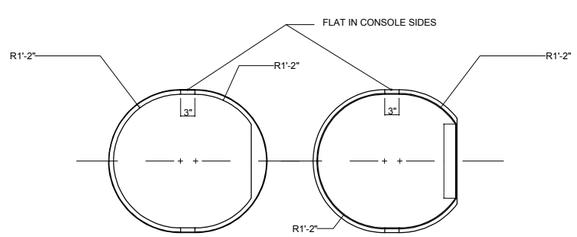

PLAN OF CONSOLE BASE

CONSOLE UPSTAND ON DECK

1 CNG WELL ARRANGEMENT 1:30

NOTE: MUST BE COMPLETED TO THE SATISFACTION OF METALAB STUDIO (SEE SPECS)

NO.	ISSUE	DATE
1	BID SET	2 August 2016

SAN ANTONIO RIVERBOATS
PROTOTYPE

[METALAB ARCHITECTURE]
20 N Sampson St
Houston, Texas 77003
713.426.3640
www.metalabstudio.com
info@metalabstudio.com
ARCHITECT

Gerald Maier, Design
Naval Architect, Inc.
3005 Canal Drive,
New Orleans, LA
Louisiana 70130
NAVAL ARCHITECT

SAR

SHEET SIZE: 12 X 18
SCALE AS NOTED

BID SET
NOT FOR CONSTRUCTION

CNG WELL
ARRANGEMENT

N-3