City of San Antonio

TRANSPORTATION AND CAPITAL IMPROVEMENTS

ADDENDUM No. 2

FORMAL INVITATION FOR BIDS (IFB)

PROJECT NAME: Wilson Boulevard (Club to Donaldson Ave.) & Thespian Island- ID NO.: 40-00322

DATE: April 13, 2015

This addendum is separated into sections for convenience; however, all contractors, subcontractors, material men, and other parties shall be responsible for reading the entire addendum. The failure to list an item or items in all affected sections of this addendum does not relieve any party affected from performing as per instructions, providing that the information is set forth one time any place in this addendum . These documents shall be attached to and become part of the Contract Documents for this project. The contractor shall be required to sign an acknowledgement of the receipt of this addendum and submit with their proposal package.

GENERAL:

1. The following changes and/or additions to the Contract Documents, via this addendum, shall apply to proposals made for and to the execution of the various parts of the work affected thereby.

2. Careful note of the Addendum shall be taken by all interested parties and all trades affected shall be fully advised in their performance of the work involved.

GENERAL COMMENTS:

A. Revisions to CPS Energy Gas to include Bushes for Screening.

CONSTRUCTION DRAWINGS:

1. Replace the CPS Energy Gas Plans with the ones attached, "Exhibit Gas – 6, dated 3/6/2015"ADDENDUM 2 (6 pages).

BID FORM AND UNIT PRICING FORM

1. 020 Bid Form, Addendum 2 includes the Additional Item #4 in the CPS Exhibit Gas-5 Section.

STATE OF TEXAS
CHARLES GRADY KOEHL
83945
LICENSED
4-14-15

PROJECT NAME: Wilson Boulevard (Club to Donaldson Ave.) & Thespian Island- ID NO.: 40-00322
DATE: April 13, 2015

B. Additive Alternate No. 1, Lighting at Thespian Island.

CONSTRUCTION DRAWINGS:

1. Add the Construction Drawings labeled "Electrical Site Plan"ADDENDUM 2 (11 pages).

BID FORM AND UNIT PRICING FORM

1. 020 Bid Form, Addendum 2 includes this Additive Alternate No. 1.

SPECIFICATIONS

All standard specifications and special specifications for Additive Alternate No. 1 are identified as follows:

- TxDOT Standard Specifications, including latest revisions and additions thereof,
- CPS Energy Standard Specifications, including latest revisions and additions thereof.

If there are any conflicts between these specifications, CPS Energy specifications shall govern.

C. Address questions from Pre-Bid Meeting and those submitted.

QUESTIONS:

1. Is a Geotechnical Report available for review?
   Response: The Geotechnical Report is attached.
2. Should "WK 2N pavement marking" be WK ZN pavement marking, meaning "work zone"? sht 19, etc.
   Response: Yes, it should be WK ZN. Sheets 14-19 have been corrected and are attached.
3. If this is "work zone" than should it not be listed on the permanent pavement marking plan? (Sht 70, etc). Should this be labeled Item 535?
   Response: No. The WK ZN markings are temporary markings and therefore not shown on the permanent pavement marking plan. The cost will be included in the Lump Sum for Item 530.1 Barricades, Signs & Traffic Handling.
4. Are the details for the VIA bus sign included? (Typically VIA replaces their own signs)
   Response: No. Contractor to coordinate sign replacement with VIA; however, VIA will remove and replace the permanent VIA Bus Stop signs furnished by VIA.
5. Is there a pay item for temporary striping? (WZ, Work Zone)
   Response: No. Temporary Pavement Markings are included in the Lump Sum for Item 530.1 Barricades, Signs & Traffic Handling.
6. Is there a pay item for removal of pavement markings?
   Response: Removal of pavement markings is included in the Lump Sum for Item 530.1 Barricades, Signs & Traffic Handling.

PROJECT NAME: Wilson Boulevard (Club to Donaldson Ave.) & Thespian Island- ID NO.: 40-00322
DATE: April 13, 2015

D. Additional updates/clarifications.

CONSTRUCTION DRAWINGS

Sheet 10, Summary of Quantities has been updated to correct the referenced Sheet numbers.

SPECIFICATIONS

The Governing Specifications and Special Provisions are attached. These were in the original emailed bid package, but not distributed to those receiving physical copies.

BID FORM AND UNIT PRICING FORM

1. Replace the 020 Bid Form with the Form attached labeled Addendum #2.
2. Replace the 025 Unit Pricing Form with the Form attached labeled Addendum #2.

Seal

END OF ADDENDUM No. 2

Addendum No. 2

CITY OF SAN ANTONIO

Project Name: Wilson Boulevard (Club Dr. to Donaldson Ave.) & Thespian Island **Date Issued: March 24, 2015**
ID NO.: 40-00322 **ADDENDUM NO. 2, April 14, 2015**
The estimated construction budget for this contract is $700,000.00 **Page 1 of 1**

020

BID FORM

I. BASE BID

Amount of Street/Roadway Construction Base Bid (Insert Amount in Words and Numbers):

_____ $_____

Amount of SAWS Water Base Bid (Insert Amount in Words and Numbers):

_____ $_____

Amount of SAWS Sewer Base Bid (Insert Amount in Words and Numbers):

_____ $_____

Amount of CPS Base Bid (Insert Amount in Words and Numbers):

_____ $_____

Total Amount of Base Bid (Insert Amount in Words and Numbers):

_____ **$**_____

II. ALTERNATES

Amount of each Alternates (if applicable) insert in Numbers:

Additive Alternate #1 - Lighting at Thespian Island

Total Amount of Bid for Additive Alternate #1 (Insert Amount in Words and Numbers):

_____ **$**_____

III. UNIT PRICES

Bidders shall submit unit pricing on the 025 Unit Pricing form, and it shall be attached immediately following this sheet.

IV. ALLOWANCES (if applicable)

_____ _____
Official Name of Company (legal) Telephone No.

_____ _____
Address Fax No.

_____ _____
City, State and Zip Code E-mail Address

Name of the proposed **Project Manager:** _____

Name of the proposed **Site Superintendent:** _____

CITY OF SAN ANTONIO

025 UNIT PRICING FORM

PROJECT NAME: Wilson (Club-Donaldson) Thespian Island (40-00322)
PROJECT NO. 40-00322

ALT. NO.	ITEM NO.	DESC. CODE	S.P. NO	BID ITEM DESCRIPTION	UNIT OF MEASURE	APPROX. QUANTITIES	UNIT BID PRICE	AMOUNT
				The City only will accept bid pricing to the hundredths. Any pricing extended out to three decimal points will be truncated to two decimal points in the City's favor.				
Wilson (Club-Donaldson) & Thespian Island (40-00322) Street/Roadway Construction Base Bid								
	100.1			Mobilization	LS	1		-
	100.2			Insurance and Bond	LS	1		-
	101.1			Preparing Right of Way	LS	1		-
	102.1			Obliterating Abandoned Street	SY	2,546		-
	103.1			Remove Concrete Curb	LF	1,333		-
	103.3			Remove Concrete Sidewalks and Driveways	SF	7,873		-
	103.4			Remove Miscellaneous Concrete	SF	44		-
	104.1			Street Excavation	CY	583		-
	108.1			Lime Treated Subgrade (6" Compacted Depth)	SY	1,311		-
	200.1			Flexible Base (12" Compacted Depth)	SY	1,311		-
	202.1			Prime Coat	GAL	138		-
	203.1			Tack Coat	GAL	665		-
	205.4			Hot Mix Asphaltic Pavement (Type D - 1.5" Comp.)	SY	6,648		-
	205.4			Hot Mix Asphaltic Pavement (Type D - 2.5" Comp)	SY	691		-
	208.1			Salvaging, Hauling & Stockpiling Reclaimable Asphaltic Pavement (1.5")	SY	6,780		-
	500.1			Machine Laid Curb	LF	4,129		-
	502.1			Concrete Sidewalks	SY	646		-
	503.1			Concrete Driveways	SY	281		-
	506.1			Concrete Retaining Walls - Comb Type	CY	2		-
	512.3			Valve Box Adjustments	EA	10		-
	515.1			Topsoil	CY	770		-
	516.1			Bermuda Sodding	SY	3,593		-
	520.1			Hydromulching	SY	1,021		-
	530.1			Barricades, Signs & Traffic Handling	LS	1		-
	531.03			R1-1 Stop (High Density)(30")	EA	3		-
	531.06			R2-1 Speed Limit (High Density)(24" x 36")	EA	1		-
	531.18			R5-1 Do Not Enter (30"x30")(High Density)	EA	1		-
	531.2			R6-2 One Way (18"x24")(High Density)	EA	5		-
	531.34			S1-1 Advance School Crossing and School Crossing (36"x36")	EA	3		-
	531.35			W16-7 Diagonal Arrow Sign (Diamond Grade)(Flourescent Yellow Green)(30"x18")	EA	3		-

PROJECT NAME: Wilson (Club-Donaldson) Thespian Island (40-00322)
PROJECT NO. 40-00322

ALT. NO.	ITEM NO.	DESC. CODE	S.P. NO	BID ITEM DESCRIPTION	UNIT OF MEASURE	APPROX. QUANTITIES	UNIT BID PRICE	AMOUNT
	531.36			S4-1 1/20 MPH School Sign (Diamond Grade)(Fluorescent Yellow Green with High Intensity White Background)(24"x48")	EA	2		-
	531.51			W11A-2 Pedestrian Crossing (30"x30")(High Density)	EA	6		-
	531.57			9 Inch Street Name, Block Numbers (High Density)	EA	4		-
	531.59			Special Sign - Via Bus Stop (High Density)	EA	2		-
	531.69			R3-17A Ahead (30"x12")(High Density)	EA	1		-
	531.75			D11-1 Bike Route (24"x18")(High Density)	EA	1		-
	535.1			4 Inch Wide Yellow Line	LF	488		-
	535.2			4 Inch Wide White Line	LF	2,623		-
	535.7			24" Wide White Line	LF	1,008		-
	535.9			Left White Arrow	EA	4		-
	535.12			Word "ONLY"	EA	2		-
	535.17			Bicycle Rider Symbol	EA	18		-
	540.6			Construction Exit (Install/Remove)	SY	60		-
	540.10			Curb Inlet Gravel Filters	LF	50		-
	553			Storm Water Pollution Prevention Plan	LS	1		-
	801.2			Level IIA Protective Fence Tree Trunk Protection	LF	200		-
					Total Street/Roadway Base Bid:			-
SAWS Water Bid:								
	826			Valve Box Adjustments	EA	6		-
	834.3			Relocate Fire Hydrant	EA	1		-
					Total SAWS Water Base Bid:			-
SAWS Sewer Bid:								
	851			Adjusting Existing Manholes	EA	3		-
					Total SAWS Sewer Base Bid:			-
EXHIBIT GAS-5, CPS Energy, Construction of Natural Gas Distribution Facilities, W.R. # 1937622								

NOTE A: For each of the items below, the Contractor's work is to include: trenching, joining, testing, coating steel, connecting new pipe to existing pipe and all necessary fittings for tie-ins such as, stopper fittings and 3-way stopper tees, sand padding, backfilling and compacting to consistency of original soil, installing all necessary cathodic protection devices such as CPTLB's and anodes, replacing paving, curbs, and sidewalks removed or damaged during construction, and cleanup as may be necessary in each instance.

NOTE B: Trenching is considered to be the normal method of service installation and is required on all service adjustments. A gas service can be rerun by INSERTION, when the old service is PULLED from the riser to one foot inside the property line, ONLY at the discretion of the CPS Inspector.

PROJECT NAME: Wilson (Club-Donaldson) Thespian Island (40-00322)
PROJECT NO. 40-00322

ALT. NO.	ITEM NO.	DESC. CODE	S.P. NO	BID ITEM DESCRIPTION	UNIT OF MEASURE	APPROX. QUANTITIES	UNIT BID PRICE	AMOUNT
NOTE C: Bid quantities shown are estimates by CPS. Per foot prices shall be applied to the actual distance measured along the top of the trench or the actual length of the bore, as applicable.								
NOTE D: Unit prices shall include insurance costs. CPS' insurance requirements are specified in Exhibit GAS-1.								
	1			Rerun and Lower Gas Service Off New Main to Meter. Sizes 1/2" thru 4" (including replacing riser if necessary).				
				Size 2" Long Side	EA	1		-
				Size 4" Long Side	EA	1		-
The COST to restore distrurbed areas is NOT an ADDITIONAL item and is to be included in the Unit Price.								
	2			Install Gas Main or Casing (Distance as Measured along the Top of Trench)				
				2" Plastic Pipe and Tracer Wire	FT	142		-
				4" Plastic Pipe and Tracer Wire	FT	35		-
				8" Plastic Pipe and Tracer Wire	FT	1253		-
The COST to abandon the existing main(s) is NOT an Additional item and is to be included in the Unit Price for this item.								
	3			Street Restoration Adjustment, when required. To be used as directed by the CPS Energy Representative.				
				Flowable Fill	CY	10		-
				Flexible Pavement Repair				
				2" HMAC Type D with 10" Asphalt Treated Base Type D or Flowable Fill	SY	25		-
	4			Install 2 medium bushes for screening of 2" Long Service.	LS	1		-
					Total CPS Energy Gas Base Bid:			-
ADDITIVE ALTERNATE NO. 1, LIGHTING AT THESPIAN ISLAND, Contractor Electrical Lighting and Power system including new electrical service and lighting poles								
NOTE A: For each of the items below, the Contractor's work is to include: trenching, joining, testing, connecting new pipe to existing pipe and all necessary fittings for feeder and branch circuits, including all connectors, couplings, conduit, trenching, sand padding, backfilling and compacting to consistency of original soil or providing specified flowable fill. Also, contractor shall provide all panel enclosures, pull and junction boxes, connectors, terminations, strut and angle iron support and all conduit and fittings necessary to provide a complete and functional electrical system.								
NOTE B: Trenching is considered to be the normal method of service installation and is required on all service and light pole connections as noted and shown on the drawings. Also, trenching must comply with all 2012 CPS Energy standards as published by CPS Energy.								

PROJECT NAME: Wilson (Club-Donaldson) Thespian Island (40-00322)
PROJECT NO. 40-00322

ALT. NO.	ITEM NO.	DESC. CODE	S.P. NO	BID ITEM DESCRIPTION	UNIT OF MEASURE	APPROX. QUANTITIES	UNIT BID PRICE	AMOUNT
NOTE C: Bid quantities shown are estimates. Per foot prices shall be applied to the actual distance measured along the top of the trench or the actual length of the bore, as applicable.								
NOTE D: Unit prices shall include insurance costs based on CPS' insurance requirements.								
	1			Provide primary trench across Kampmann Street and installation of underground duct				
				Primary Street Trench (Including Backfill as Specified)	FT	75		-
				2-1/2" Underground Schedule 40	FT	75		-
				2-1/2" PVC Schedule 80 90's	EA	2		-
	2			Provide Concrete Transformer Pad Per CPS Energy Standards				
				Concrete Pad	EA	1		-
				Steel	EA	1		-
				Forms	EA	1		-
	3			Build Electric Service Rack with Panels and Enclosures				
				Service Rack erected with Strut Supports	EA	1		-
				Panel "P" Furnish and Install	EA	1		-
				Control Enclosure/Cabinet	EA	1		-
				Photocell Control and Terminations	EA	1		-
				Install GFCI Receptacle and Weatherproof Enclosure	EA	1		-
	4			Build Light Pole Concrete Standards and Install Branch Conduits and Pour Concrete Standards				
				Pole Light Standard	EA	4		-

CITY OF SAN ANTONIO

025 UNIT PRICING FORM

PROJECT NAME: Wilson (Club-Donaldson) Thespian Island (40-00322)
PROJECT NO. 40-00322

ALT. NO.	ITEM NO.	DESC. CODE	S.P. NO	BID ITEM DESCRIPTION	UNIT OF MEASURE	APPROX. QUANTITIES	UNIT BID PRICE	AMOUNT
				Branch Conduit Trench	FT	416		-
				Branch Conduit 2-1/2" PVC Schedule 40	FT	416		-
				Branch Conduit 90's 2-1/2" PVC Schedule 80	EA	8		-
	5			Furnish and Install Light Poles				
				Light Pole Cost	EA	4		-
				Light Pole Installation	EA	4		-
				Light Pole Circuit Terminations	EA	5		-
				Total ADDITIVE ALTERNATE NO. 1, Lighting at Thespian Island:				-

Total Project Bid **-**

_____certifies that the unit prices shown on this complete computer print-out for all of the bid items and the alternates contained in this proposal are the unit prices intended and that its bid will be tabulated using these unit prices and no other information from this print-out.

_____Acknowleged and agrees that the total bid amount shown will be read as its total bid and further agrees that the official total bid amount will be determined by multiplying the unit bid prices shown in this print-out by the respective estimated quantities shown in the proposal and then totaling all of the extended amounts. _____ agrees to the terms, conditions, and requirements of the bidder's bid proposal.

Signed: _____ Date: _____

Title: _____

Civic Improvement Project

Exibit Gas – 6

SWPPP General Notes:

1 - Do not disturb vegetated areas (trees, grass, weeds, brush, etc.) any more than necessary for construction

2 - Construction entrance / exit location, and construction equipment and material storage yard to be determined in the field.

3 - Storm Water Pollution Prevention Controls may need to be modified in the field to accomplish the desired effect. All modifications are to be noted on this Exhibit and signed and dated by the responsible party.

4 - Restrict entry / exit to the project site to designated locations by use of adequate fencing, if necessary.

5 - All Storm Water Pollution Prevention Controls are to be maintained and in working conditions at all times.

6 - For a complete listing of Temporary Storm Water Pollution Prevention Controls refer to the TPDES Storm Water Pollution Prevention Plan.

7 - Storm water pollution prevention structures should be constructed within the site boundaries. Some of these features may be shown outside the site boundaries on this plan for visual clarity.

8 - As soon as practical, all disturbed soil that will not be covered by impervious cover such as parkway areas, Easements areas, embankment slopes, etc. will be stabilized per applicable project specifications.

9 - Upon completion of the project, including site stabilization, and before final payment is issued, Contractor shall Remove all sediment and erosion control measures, paying special attention to rock berms in drainage features.

Service Insertion Notes

1. Rerunning of services shall be done as designated (see General Note Number 2).
2. Insert 1" & 1-1/4" steel residential services with anodeless polyethylene (PE) as follows:
   a. 1/2" PE pipe should be run from the main to one foot inside the property line of the customer served.
   b. Insert with 1/2" IPS PE pipe beginning one foot inside the property line and terminating at the connection to the pig-tail of an anodeless riser.
   c. The 1/2" IPS PE pipe insertion shall not exceed 100 feet in length.
3. The minumum service size to a commercial property shall be 1-1/4".
4. Steel services are to be replaced with anodeless risers of equal size.
5. Insertion shall not be used:
   a. on services 1-1/2" or larger.
   b. On services to a manifold that serves, or has the potential to serve, more than one meter.
6. Any variance from the above standards should be approved by Gas Engineering.

General Notes

1. All proposed gas mains are to be installed at 5'-0" of cover unless otherwise noted on the sketch, indicated on the Location Data Table, or as directed by the CPS Inspector or Field Representative. All proposed gas services are to be installed at the elevations indicated on the Location Data Table or as directed by the CPS Inspector or Field Representative.
2. All services labeled with an "R" are to be rerun from main to meter and services labeled with a "R1" are to be rerun from main to 1' inside the property line. From main to 1' inside the property line, the services are to be installed at the elevation indicated on the Location Data Table. For services labeled with a "T", the existing service is to be tied over to the new main and services labeled with an "A" are to be abandoned.
3. Gas main is to be abandoned in sections no longer than 300 feet. Each section is to be purged of gas with compressed air, and then the ends are to be sealed with concrete. All abandoned services are to be plugged. All valve boxes on abandoned mains are to be removed.
4. If the general contractor requires temporary tie-ins that are not shown on the CPS Energy sketch due to project phasing or to accommodate this project in any way, this work will be done at the general contractor's expense. General Contractor will also be responsible for all costs associated with power pole bracing whenever bracing is required for the installation of proposed gas facilities.
5. The locations of underground utilities indicated on the job sketch are taken from the best records available and are not guaranteed to be accurate. Foreman shall verify location and depth of all existing utilities, whether shown on the plans or not, and shall be responsible for the protection of existing utilities during construction.
6. Gas valves and underground gas facility access points should remain accessible at all times. Contractor must notify Richard Rodriguez with CPS Energy at (210) 353-2226 at least 48 hours prior to construction in order to adjust existing valve covers or access points within the proposed area of construction.
7. 48 hours before excavating, notify One-Call at 1-800-545-6005. This number should notify all utilities of locates. For Emergency gas locates call 210-353-HELP.
8. In accordance with the Texas Administrative Code Title 16, Part 1, Ch. 3 Rule 3.30 and in compliance with the Clean Water Act, 33 U.S.C. 1251, for projects that will disturb 1 or more acres of land or will disturb less than 1 acre of land but is part of a common plan of development that will ultimately disturb 1 or more acres the General Contractor is responsible for submitting the Notice of Intent (NOI) through the Electronic Notice of Intent Online System (eNOI) at the following web address: www.epa.gov/npdes/stormwater/cgpenoi . The General Contractor will need to ensure Sub-Contractor compliance under EPA Construction General Permit requirements. NOI must be certified 14 days prior to earth disturbing activities, in accordance with National Pollutant Discharge Elimination System (NPDES) EPA Construction General Permit.
9. All gas facilities will require proper connection for cathodic protection and locating purposes as indicated by CPS. Call Corrosion Control at 353-3237 prior to installing, adjusting, or abandoning gas lines and before connecting or disconnecting wires to any CPTLB.
10. All new polyethylene gas services and mains are to be joined by butt fusion. Compression couplings must not be used on new gas line construction.
11. TRENCH EXCAVATION PROTECTION: Contractor and/or Contractor's independently retained employee or structural design/geotechnical/ safety/equipment consultant, if any, shall review these plans and any available geotechnical information and the anticipated installation site(s) in order to develop the Contractor's plans to implement the project described in the Contract Documents. The Contractor's plans shall provide for adequate trench safety systems that comply with, as a minimum, OSHA standards for trench safety consultant shall develop and implement a trench safety program in accordance with OSHA standards governing the presence and activities of individuals working in and around trench excavation.

Project Notes

1. All R.O.W. acquisition/clearing and OHE pole relocations must be completed before gas adjustments. General Contractor will be responsible for all cost associated with power pole bracing where necessary for the installation of gas facilities.
2. Contact Hector Villarreal (CPS Energy) at least 48-hours prior to all gas main tie-ins to coordinate pressure control operation. A minimum two-week notice must be submitted prior to performing tie-in on any supply-pressure gas mains.
3. Contractor will be responsible for all costs associated with removing abandoned utilities or structures that conflict with the installation of the proposed gas facilities.

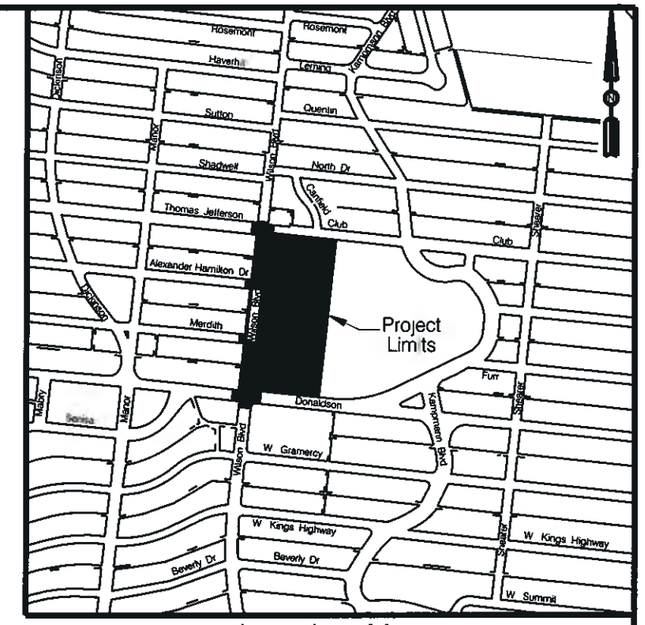

Location Map
NTS

Construction Points		Install		Abandon	
From	To	Pipe Size	Length	Pipe Size	Length
1	2	8PA	70'	8	32'
		4PA	35'	4	71'
3	4	8PA	62'	8	74'
5	6	8PA	1121'	8	1114'
7	8	2PA	56'	2	56'
9	10	2PA	35'	2	31'
11	12	2PA	26'	2	32'
13	14	2PA	25'	2	32'
		Total 2PA	142'	Total 2	151
		Total 4PA	35'	Total 4	71'
		Total 8PA	1253'	Total 8	1220'

Legend

- Center Line
- Existing Property Line
- Proposed Property Line
- Easement Line
- Existing Gas Service
- Existing Gas Main
- Install Gas Service
- Install Gas Main
- Abandon Gas
- Cable TV
- Telephone
- Sanitary Sewer
- Proposed Drainage
- Existing Drainage
- Electric
- Water

STATE OF TEXAS
WILLIAM T. FEY
91777
LICENSED PROFESSIONAL ENGINEER

3-6-15

Pressure Test	Construction	No	Drawing Revision	Date
Minimum Test 90 PSIG	Contractor	0	Planning Completed	03-06-15
Tested To PSIG	Center			
By	By			
Date	Start Date			
	Comp. Date			

Checked By WTF — Date Approved 3-6-15
Approved By — Date Approved 3-6-15
Designed By Ext 3194 — Hector Villarreal
Map Quadrant 2114811-13717264 146-592
Project No. G- 0272
Job Title: Wilson Blvd – Club to Donaldson
CPS ENERGY
P O BOX 1771
SAN ANTONIO, TX 78296
Job No 1937622
Page 1 of 6

ADDENDUM #2

All proposed gas mains and services are to be installed at the planned Gas Top of Pipe Elevation indicated on the Location Data Table.

POINT SPAN	PIPE PRINT LINE DATA (EXAMPLE SHOWN)
	" IPS DR GAS PE3408/PE100 CEE ASTM D2513
	" IPS DR GAS PE3408/PE100 CEE ASTM D2513
	" IPS DR GAS PE3408/PE100 CEE ASTM D2513
	" IPS DR GAS PE3408/PE100 CEE ASTM D2513
	" IPS DR GAS PE3408/PE100 CEE ASTM D2513
	" IPS DR GAS PE3408/PE100 CEE ASTM D2513
	" IPS DR GAS PE3408/PE100 CEE ASTM D2513
	" IPS DR GAS PE3408/PE100 CEE ASTM D2513
	" IPS DR GAS PE3408/PE100 CEE ASTM D2513
	" IPS DR GAS PE3408/PE100 CEE ASTM D2513
	" IPS DR GAS PE3408/PE100 CEE ASTM D2513
	" IPS DR GAS PE3408/PE100 CEE ASTM D2513
	" IPS DR GAS PE3408/PE100 CEE ASTM D2513
	" IPS DR GAS PE3408/PE100 CEE ASTM D2513
	" IPS DR GAS PE3408/PE100 CEE ASTM D2513
	" IPS DR GAS PE3408/PE100 CEE ASTM D2513
	" IPS DR GAS PE3408/PE100 CEE ASTM D2513
	" IPS DR GAS PE3408/PE100 CEE ASTM D2513
	" IPS DR GAS PE3408/PE100 CEE ASTM D2513
Example 1 to 2	2" IPS DR11 DRISCOPIPE 8100 GAS PE3408/PE100 CEE ASTM D2513 WTO15 R NR 0356 A1-043 072706 COIL 0152

STATE OF TEXAS
WILLIAM T. FEY
91777
LICENSED
PROFESSIONAL ENGINEER

3-6-15

No.	Drawing Revision	Date
0	Planning Completed	06-06-15

Checked By: WTF — Date Approved 3-6-15
Approved By: — Date Approved 3-6-15
Designed By: Ext 3194 Hector Villarreal
Map Quadrant 2114811-13717264 146-592
Project No G- 0272
Job Title Wilson Blvd – Club to Donaldson
CPS ENERGY
P.O BOX 1771
SAN ANTONIO, TX 78296
Job No 1937622
Page 2 of 6

ADDENDUM #2

All proposed gas mains and services are to be installed at the planned Gas Top of Pipe Elevation indicated on the Location Data Table.

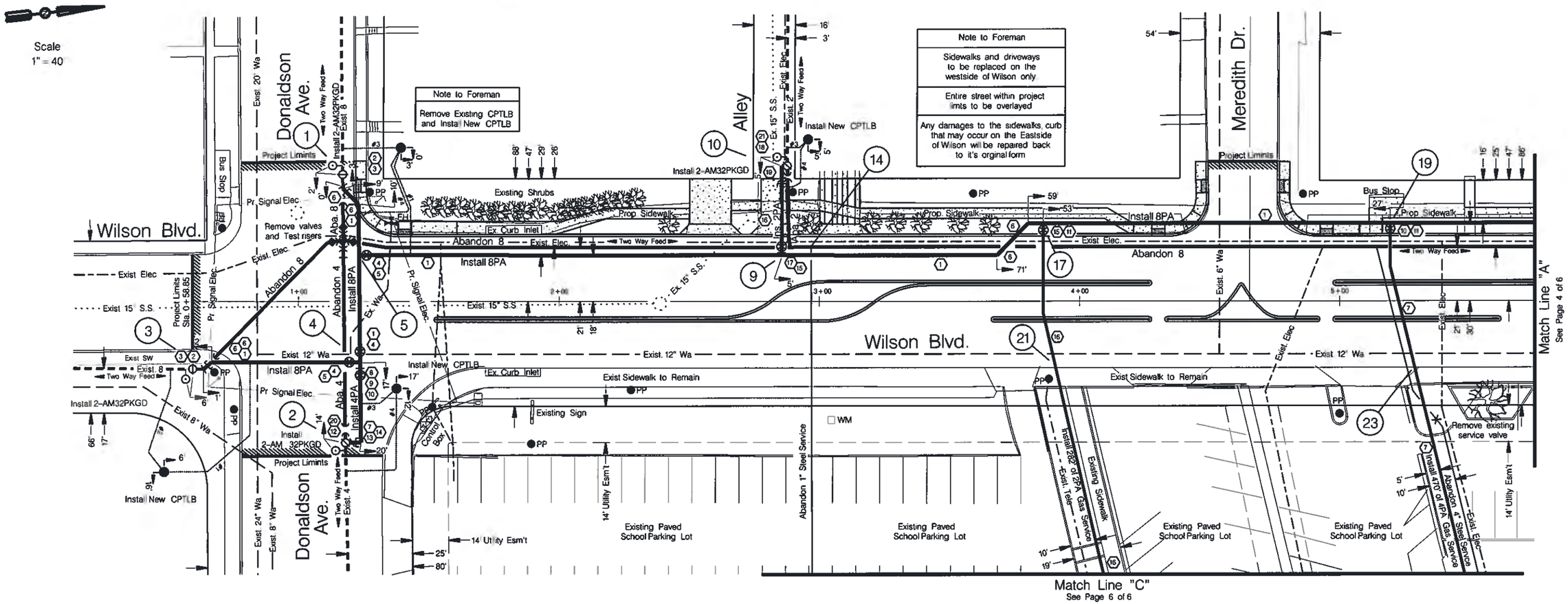

Item	Materials Description	Manufacturer	Quantity	Stock #	Item	Materials Description	Manufacturer	Quantity	Stock #
1	Pipe Plastic 8" IPS SDR 11 Stick		589 FT	1032780	11	Saddle Branch E 8"X4" Butt Fuse		1 EA	1032907
2	Fitting Shortstop 8" Welding F/use		2 EA	1018417	12	Fitting Shortstop Welding 3-way Tee 4"		1 EA	1018480
3	Fitting Transition 8" Stl to Plastic		2 EA	1032895	13	Fitting Transition 4" Stl to Plas.		1 EA	1016106
4	Valve Plastic 8" Ball / Plug Butt Fuse		3 EA	1033267	14	Elbow PE 90 Deg 2" Butt Fuse		1 EA	1015800
5	Tee PE Pipe 8" Butt Fuse		2 EA	1032900	15	Saddle Branch E 8"X2" Butt Fuse		1 EA	1032906
6	Elbow PE 45 Deg 8" Butt Fuse		6 EA	1032904	16	Pipe Plastic 2" IPS SDR 11 Coil		173 FT	1013959
7	Pipe Plastic 4" IPS SDR 11 Coil		174 FT	1014020	17	Valve Plastic 2" Ball / Plug Butt Fuse		2 EA	1025029
8	Reducer PE 8"X6" Butt Fuse		1 EA	1032903	18	Fitting Transition 2" Stl to Plas		1 EA	1016105
9	Reducer PE 6"X4" Butt Fuse		1 EA	1032903	19	Cap 2" Pipe End Weld CS 0.154" WT		1 EA	1016606
10	Valve Plastic 4" Ball / Plug Butt Fuse		1 EA	1025090	20	Cap 4" Pipe End Weld CS 0.237" WT		1 EA	1016607
					21	Fitting Shortstop Welding 3-way Tee 2"		1 EA	1018419

STATE OF TEXAS
WILLIAM T. FEY
91771
PROFESSIONAL ENGINEER
3-6-15

No	Drawing Revision	Date
0	Planning Completed	03-06-15

Checked By: WTF — Date Approved: 3-6-15
Approved By: — Date Approved: 3-6-15
Designed By: Ext 3194 — Hector Villarreal
Job Title: Wilson Blvd – Club to Donaldson
Map Quadrant: 2114811-13717264 146-592
Project No: G- 0272
CPS ENERGY
P.O. BOX 1771
SAN ANTONIO, TX 78296
Job No: 1937622
Page 3 of 6

ADDENDUM #2

All proposed gas mains and services are to be installed at the planned Gas Top of Pipe Elevation indicated on the Location Data Table.

Scale
1" = 40'

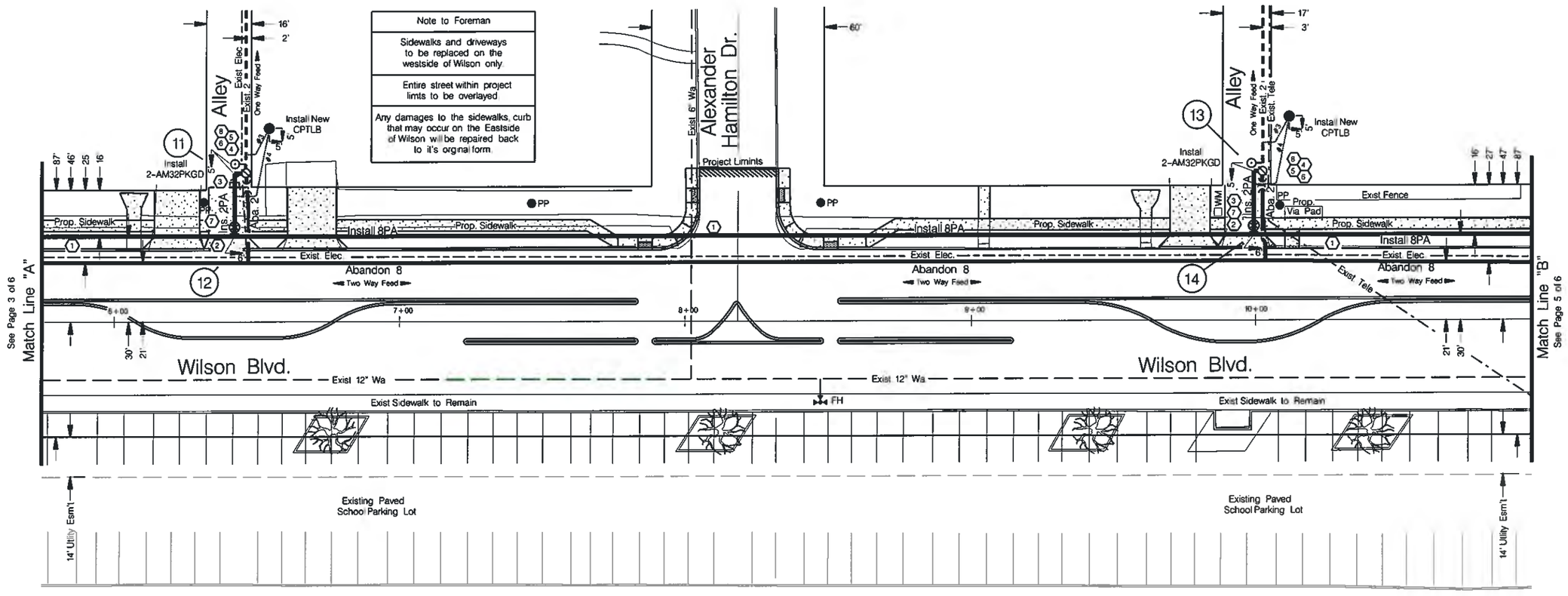

Item	Materials Description	Manufacturer	Quantity	Stock #
1	Pipe Plastic 8" IPS SDR 11 Stick		522 FT	1032780
2	Saddle Branch E 8"X2" Butt Fuse		2 EA	1032906
3	Pipe Plastic 2" IPS SDR 11 Coil		48 FT	1013959
4	Fitting Shortstop Welding 3-way Tee 2"		2 EA	1018419
5	Fitting Transition 2" Stl to Plas.		2 EA	1016105
6	Cap 2" Pipe End Weld CS 0.154" WT		2 EA	1016606
7	Valve Plastic 2" Ball / Plug Butt Fuse		2 EA	1025029
8	Elbow PE 90 Deg 2" Butt Fuse		1 EA	1015800

STATE OF TEXAS
WILLIAM T. FEY
61777
PROFESSIONAL ENGINEER

3-6-15

No	Drawing Revision	Date
0	Planning Completed	03-06-15

Checked By: WTF — Date Approved: 3-6-15
Approved By: — Date Approved: 3-6-15
Designed By: Ext 3194 Hector Villarreal
Map Quadrant: 2114811-13717264 146-592
Project No: G- 0272
Job Title: Wilson Blvd – Club to Donaldson
CPS ENERGY
P.O BOX 1771
SAN ANTONIO, TX 78296
Job No: 1937622

ADDENDUM #2

All proposed gas mains and services are to be installed at the planned Gas Top of Pipe Elevation indicated on the Location Data Table.

Scale.
1" = 40'

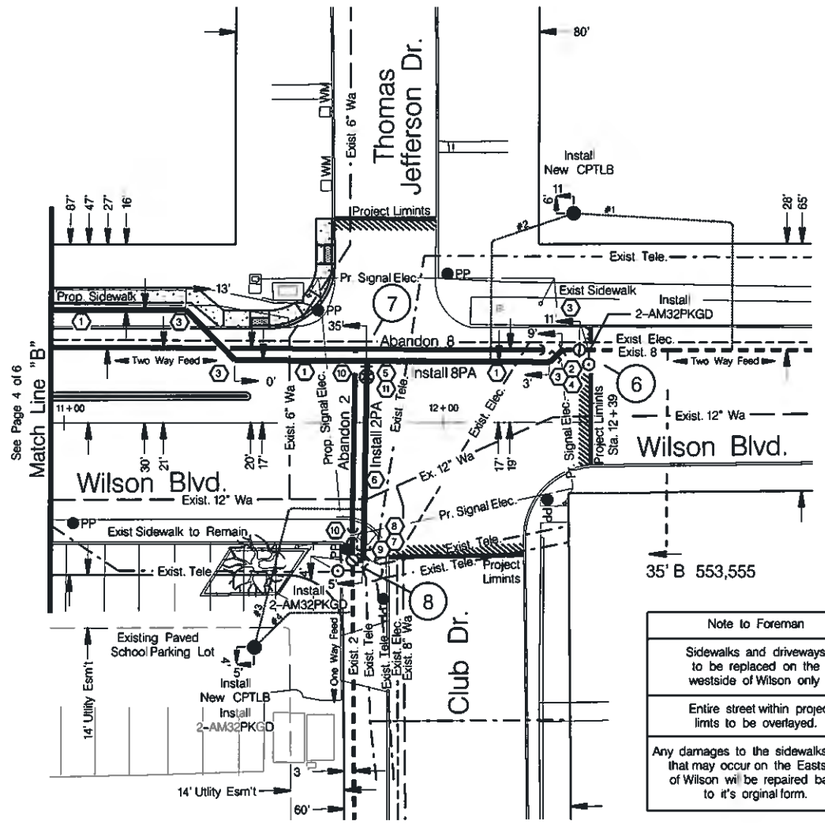

Note to Foreman
Sidewalks and driveways to be replaced on the westside of Wilson only
Entire street within project limts to be overlayed.
Any damages to the sidewalks, curb that may occur on the Eastside of Wilson will be repaired back to it's orginal form.

Item	Materials Description	Manufacturer	Quantity	Stock #
1	Pipe Plastic 8" IPS SDR 11 Stick		142 FT	1032780
2	Fitting Shortstop 8" Welding F/use		1 EA	1018417
3	Elbow PE 45 Deg 8" Butt Fuse		4 EA	1032904
4	Fitting Transition 8" Stl to Plastic		1 EA	1032895
5	Saddle Branch E 8"X2" Butt Fuse		1 EA	1032906
6	Pipe Plastic 2" IPS SDR 11 Coil		54 FT	1013959
7	Fitting Shortstop Welding 3-way Tee 2"		1 EA	1018419
8	Fitting Transition 2" Stl to Plas.		1 EA	1016105
9	Elbow PE 90 Deg 2" Butt Fuse		1 EA	1015800
10	Cap 2" Pipe End Weld CS 0.154" WT		1 EA	1016606
11	Valve Plastic 2' Ball / Plug Butt Fuse		1 EA	1025029

STATE OF TEXAS
WILLIAM T. FEY
91777
LICENSED
PROFESSIONAL ENGINEER
3-6-15

No.	Drawing Revision	Date
0	Planning Completed	03-06-15

Checked By: WTF — Date Approved: 3-6-15
Approved By: — Date Approved: 3-6-15
Designed By: Ext. 3194 — Hector Villarreal
Map Quadrant: 2114811-13717264 146-592
Project No: G- 0272
Job Title: Wilson Blvd – Club to Donaldson
CPS ENERGY
P.O. BOX 1771
SAN ANTONIO, TX 78296
Job No: 1937622

ADDENDUM #2

All proposed gas mains and services are to be installed at the planned Gas Top of Pipe Elevation indicated on the Location Data Table.

Exibit Gas – 6

Scale.
1" = 40

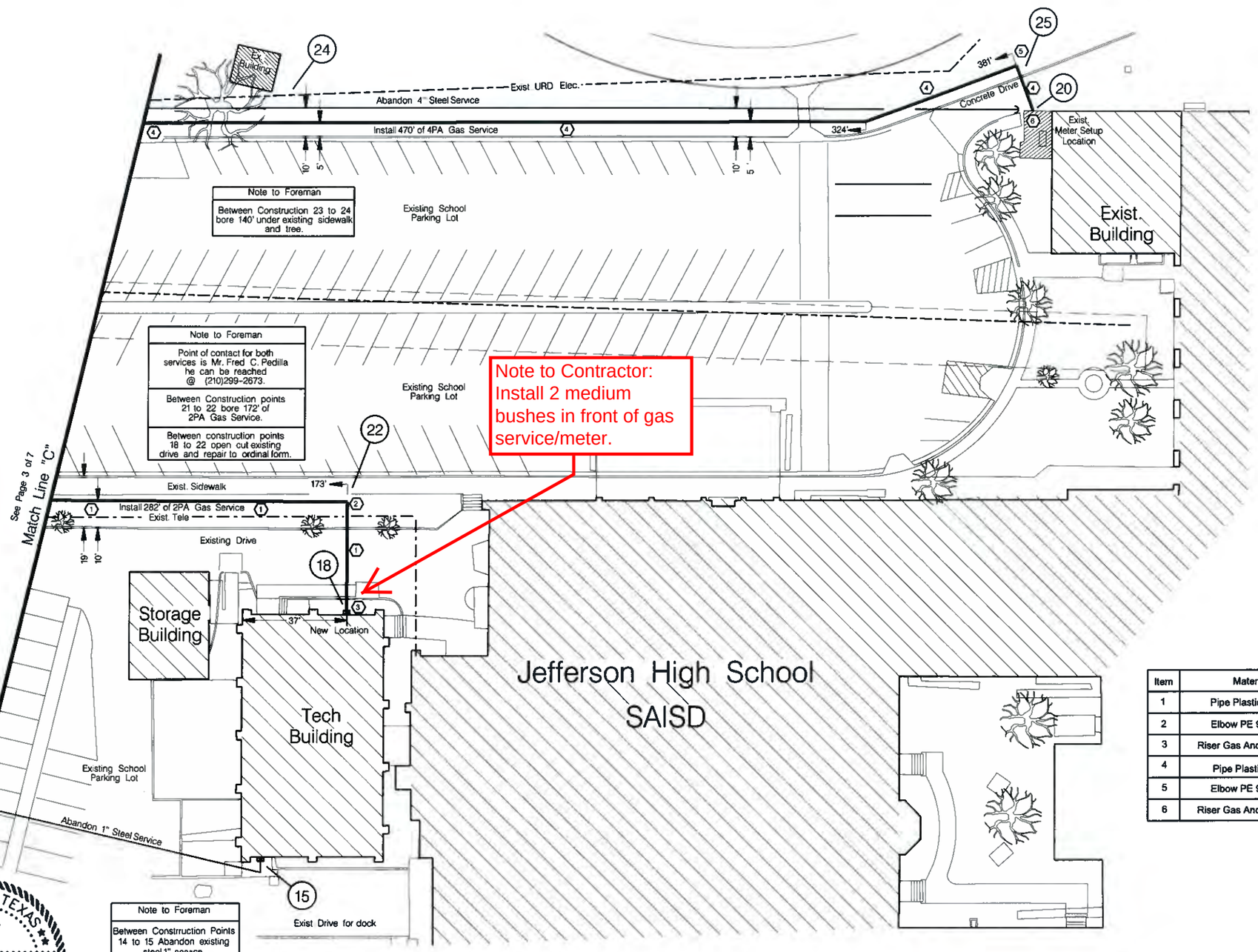

Note to Foreman
Existing meter setup to remain
At construction point 20 remove existing riser and replace with new 4" Anodless Riser
Between Construction point 20 to 25 open cut existing concrete drive and curb. Replace trench and Curb back to orginal form

Note to Foreman
Between Constrruction Points 14 to 15 Abandon existing steel 1" service
At construction point 15 remove existing riser and relocate existing 30LT meter to new location

Item	Materials Description	Manufacturer	Quantity	Stock #
1	Pipe Plastic 2" IPS SDR 11 Coil		144 FT	1013959
2	Elbow PE 90 Deg 2" Butt Fuse		1 EA	1015679
3	Riser Gas Anodeless 2X2X36VX36H		1 EA	1023025
4	Pipe Plastic 4" IPS SDR 11 Coil		331 FT	1014020
5	Elbow PE 90 Deg 4" Butt Fuse		1 EA	1015800
6	Riser Gas Anodeless 4X4X36VX36H		1 EA	P.O

STATE OF TEXAS
WILLIAM T. FEY
91777
LICENSED PROFESSIONAL ENGINEER
3-6-15

No	Drawing Revision	Date
0	Planning Completed	03-06-15

Checked By: WTF — Date Approved: 3-6-15
Approved By: — Date Approved: 3-6-15

Designed By: Ext 3194 — Hector Villarreal
Map Quadrant: 2114811-13717264 146-592
Project No: G- 0272

Job Title: Wilson Blvd – Club to Donaldson
CPS ENERGY
P.O BOX 1771
SAN ANTONIO, TX 78296

Job No: 1937622

Page 6 of 6

ADDENDUM #2

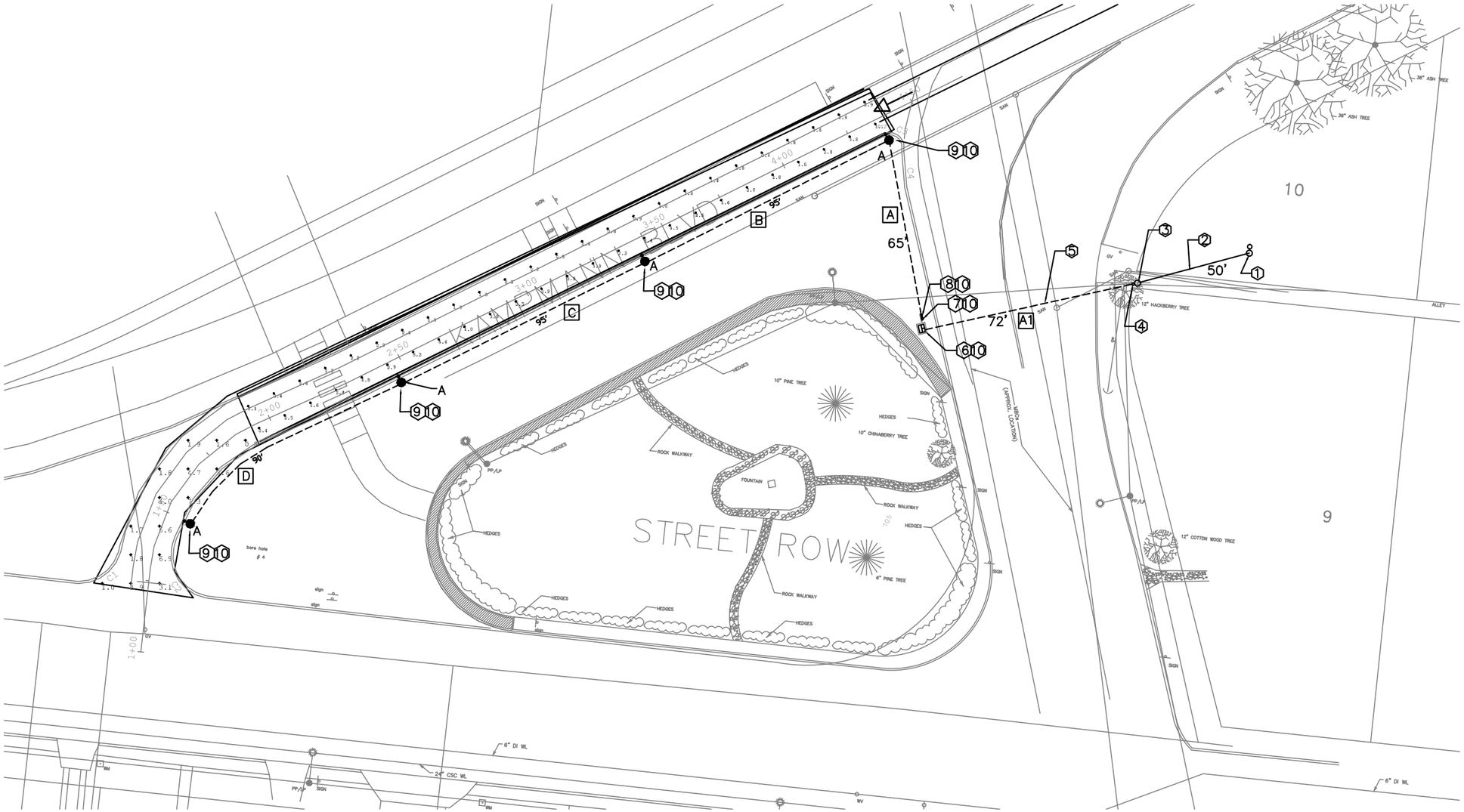

KEY NOTES:

1. EXISTING TRANSFORMER POLE AND DISTRIBUTION POLE WITH CPS ENERGY PRIMARY SERVICE FOR SURROUNDING BUILDINGS. CPS ENERGY TO EXTEND PRIMARY OVERHEAD LINES TO NEW SITE AS PROPOSED. COORDINATE THE EXACT REQUIREMENTS AND PLAN WITH CPS ENERGY PERSONNEL.
2. PROPOSED PRIMARY, SINGLE PHASE, OVER HEAD LINE EXTENSION TO SERVE SUBJECT PROJECT.
3. EXISTING POLE TO BE UPGRADED TO SUPPORT NEW PRIMARY OVERHEAD LINE EXTENSION AND SERVE AS A RISER POLE TO PROVIDE UNDERGROUND PRIMARY SERVICE TO THE SUBJECT PROJECT AS SHOWN AND NOTED HEREIN.
4. 2½" PVC SCH 80 CONDUIT SERVING AS RISER CONDUIT FOR UNDERGROUND SERVICE TO ISLAND TRANSFORMER.
5. 2½" PVC SCHEDULE 40 PIPE ROUTED UNDERGROUND PER CPS ENERGY STANDARDS TO SERVE PROPOSED PAD MOUNTED TRANSFORMER.
6. PROPOSED PAD MOUNTED TRANSFORMER BY CPS ENERGY.
7. PROPOSED SERVICE RACK WITH MAIN PANEL "P" TO SERVE PROPOSED POLE LIGHTS.
8. PROPOSED ENCLOSURE FOR PHOTOCELL CONNECTION TO CONTROL LIGHT CIRCUIT SERVING THE POLE CIRCUITS AND THE SERVICE GFI RECEPTACLE.
9. PROPOSED LIGHT POLE FIXTURE AND STANDARDS AS SCHEDULED AND DETAILED HEREIN.
10. CONTRACTOR TO PROVIDE & INSTALL STREETLIGHTS AND CONCRETE STANDARDS AND TO INSTALL STREET LIGHT INFRASTRUCTURE, INCLUDING TRENCHING, DUCT BANKS, BACKFILLING, ELECTRICAL CONDUCTORS, FITTINGS, ETC. AND TERMINATIONS.

LEGEND:

- TRANSFORMER
- POLE LIGHT
- TRANSFORMER POLE
- UNDER GROUND CONDUIT
- OVER HEAD AERIAL OVERHEAD ELECTRIC CABLE
- METER/PANEL PEDESTAL

STATE OF TEXAS
EDWARD C. MONACO
57786
REGISTERED
PROFESSIONAL ENGINEER
Edward C. Monaco
04-14-2015

ELECTRICAL - SITE PLAN

Scale: 1"=40'-0"

N

CONDUCTOR AND CONDUIT SUMMARY

RUN NO.	POLE TO POLE HORIZONTAL DISTANCE (FEET)	PHASE/NEUTRAL CONDUCTOR SIZE (THHN/THWN-2)	NUMBER OF PHASE CONDUCTORS	NUMBER OF NEUTRAL CONDUCTORS	GROUND CONDUCTOR SIZE (THHN/THWN-2)	CONDUIT SIZE (PVC SCHED 40)	CONDUIT (FEET)	REMARKS
A1	74	BY CPS	BY CPS	BY CPS	BY CPS	3"	100	FROM RISER POLE TO TRANSFORMER
A	62	#4 COPPER	2	1	#8 COPPER	2"	80	FROM TRANSFORMER TO POLE A
B	95	#6 COPPER	2	1	#8 COPPER	2"	100	POLE A TO POLE B
C	95	#6 COPPER	2	1	#8 COPPER	2"	100	POLE B TO POLE C
D	90	#6 COPPER	2	1	#8 COPPER	2"	100	POLE C TO POLE D

Edward C. Monaco P.E.
2115 Anchor Drive, Ste #3
San Antonio, Texas 78213
210-541-0200
Firm Registration # F-8297

PROJECT NAME:
CITY OF SAN ANTONIO DEPARTMENT OF TRANSPORTATION & CAPITAL IMPROVEMENTS
WILSON BLVD. (CLUB-DONALDSON) & THESPIAN ISLAND(40-00322)

DATE:	04-01-2015
DESIGNED BY:	ECM
DRAWN BY:	ECM/VA
CHECKED BY:	ECM
PROJECT START DATE:	-
PROJECT NUMBER:	2015
ENGINEER OF RECORD:	ECM

REVISIONS

REV.	DESCRIPTION	BY	DATE	APPROV.

ELECTRICAL SITE PLAN E-1

ADDITIVE ALTERNATE NO. 1, ADDENDUM 2

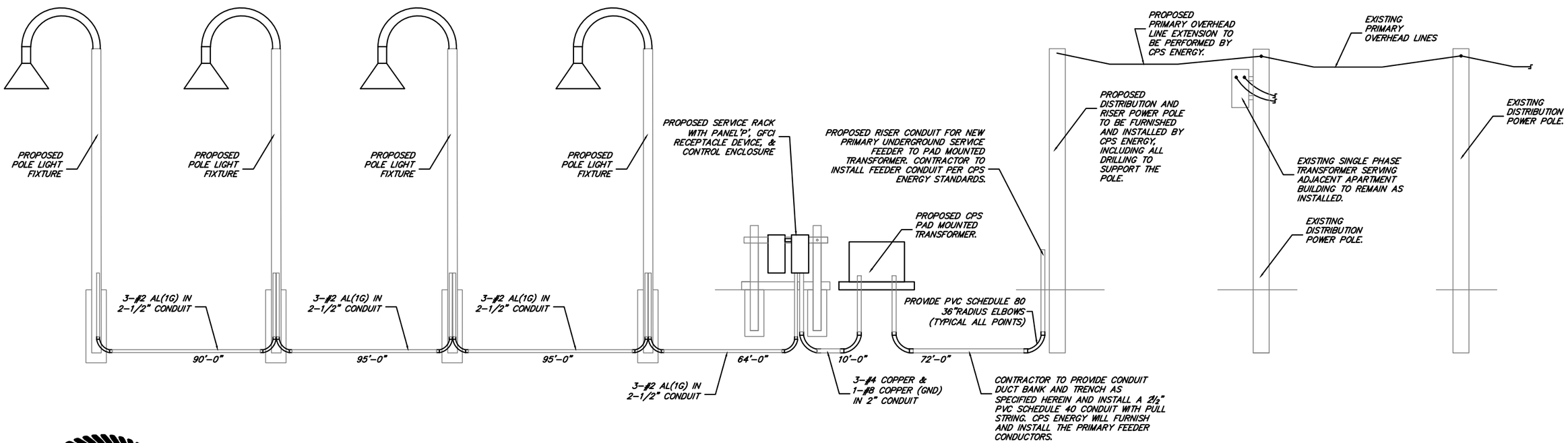

ELECTRICAL RISER DIAGRAM

Scale: NOT TO SCALE
(REFER TO SCHEDULE HEREIN FOR FEEDER & BRANCH CIRCUIT INFORMATION)

Edward C. Monaco P.E.
2115 Anchor Drive, Ste #3
San Antonio, Texas 78213
210-541-0200
Firm Registration # F-8297

PROJECT NAME:
CITY OF SAN ANTONIO DEPARTMENT OF TRANSPORTATION & CAPITAL IMPROVEMENTS
WILSON BLVD. (CLUB-DONALDSON) & THESPIAN ISLAND(40-00322)

DATE:	04-01-2015	PROJECT START DATE:	-
DESIGNED BY:	ECM	PROJECT NUMBER:	2015
DRAWN BY:	ECM/VA	ENGINEER OF RECORD:	ECM
CHECKED BY:	ECM		

REVISIONS

REV.	DESCRIPTION	BY	DATE	APPROV.

ELECTRICAL RISER DIAGRAM
E-2

ADDITIVE ALTERNATE NO. 1, ADDENDUM 2

Panel: __ "P"						Equipment Groun			Surface
Voltage_ 120/240V 1PH 3W		60A	MCB	10KAIC					Nema 3R
			VA		VA				
Ckt #	Description	Bkr/P	A		B		Bkr/P	Description	Ckt #
1	LIGHT POLES	20/2	500	-			20/1	GFI WEATHERPROOF RECEPTACLE	2
3	"	"			500	-	20/1	SPARE	4
5	SPARE	20/1	-	-			20/1	SPACE	6
7	SPARE	20/1			-	-	20/1	SPACE	8
9	SPARE	20/1	-	-			20/1	SPACE	10
11	SPARE	20/1			-	-	20/1	SPACE	12
	Total Volt-Amps		500	-	500	-			
	Total Volt-Amps Per Phase		500		500				
	Total Per Phase		500		500				
	Plus 25% Per NEC		5,000		5,000				
	Total VA Capacity		5,500		5,500				
	Total Ampacity		20		20				

Load Analysis:
120/240V 1PH 3W

	Qty	VA/SF or VA/Unit	Total VA	NEC Demand	Total NEC VA	Amperes/Phase A	B
LIGHTS	4	175.00	700	125%	875	3.65	3.65
Total Required Capacity			700		875	3.65	3.65

GENERAL NOTES:

1. ALL UNDERGROUND CONDUIT RUNS SHALL BE DIRECT BURIED 36" MINIMUM DEPTH WITH UNDERGROUND WARNING TAPE AT A DEPTH OF 12". ON ALL UTILITY COMPANY PRIMARY SERVICE FEEDERS PROVIDE FLOWABLE FILL PER UTILITY COMPANY STANDARDS
2. ABOVE GROUND CONDUIT SHALL BE PVC SCHEDULE 80, UNLESS OTHERWISE NOTED.
3. UNDERGROUND CONDUIT SHALL BE RIGID NON-METALLIC CONDUIT, SCHEDULE 40 ON HORIZONTAL AND VERTICAL RUNS AND SCHEDULE 80 ON ALL 90'S AND 45'S AND OFFSETS. ALL BENDS SHALL BE LONG RADIUS (36") BENDS.
4. ALL ENCLOSURES AND DISCONNECTS MUST BE PAD-LOCKABLE.
5. ALL MOUNTING HARDWARE AND STRUT SHALL BE HOT DIPPED RIGID GALVANIZED STEEL.
6. ALL ENCLOSURES SHALL BE NEMA 3R, UNLESS NOTED OTHERWISE.
7. ALL CONDUIT, BOXES, FITTINGS AND STRUT MOUNTED AT THAT THE TOP LEVEL OF THE SUBJECT PLANT SHALL BE EITHER PVC COATED RIGID STEEL OR STAINLESS STEEL LISTED FOR CORROSION RESISTANCE.
8. SERVICE RACK STRUTS NEED TO BE 1 1/2" MINIMUM STEEL AND BE MOUNTED ON 4" GALVANIZED STEEL PIPE. PROVIDE END CAPS ON ALL STRUT CHANNEL ENDS.
9. THERE SHALL BE 6" MINIMUM SPACING BETWEEN EQUIPMENT MOUNTED ON THE RACK.
10. ELECTRICAL RACK SHALL HAVE SUPPORT COLUMNS EVERY 5 FEET.
11. PROVIDE SEALING FITTINGS AT THE JUNCTION BOX FOR THOSE CONDUITS ENTERING THE PLANT AREA.
12. PROVIDE A U.L. 1449 3RD EDITION SURGE ARRESTOR IN A NEMA 3R ENCLOSURE ATTACHED TO THE BACK OF THE INCOMING MAIN PANEL.
13. SPARE CONDUITS ARE NOT SHOWN ON ONE-LINE DIAGRAM.HOWEVER, PROVIDE ONE SPARE OF EQUAL SIZE IN ALL TRENCHES EXTENDING FROM THE UTILITY COMPANY TRANSFORMER POLE TO THE SERVICE RACK AND FROM THE SERVICE RACK TO THE EQUIPMENT AND TANKS.

Edward C. Monaco P.E.
2115 Anchor Drive, Ste #3
San Antonio, Texas 78213
210-541-0200
Firm Registration # F-8297

PROJECT NAME:
CITY OF SAN ANTONIO DEPARTMENT OF TRANSPORTATION & CAPITAL IMPROVEMENTS
WILSON BLVD. (CLUB-DONALDSON) & THESPIAN ISLAND(40-00322)

DATE:	04-01-2015
DESIGNED BY:	ECM
DRAWN BY:	ECM/VA
CHECKED BY:	ECM
PROJECT START DATE:	-
PROJECT NUMBER:	2015
ENGINEER OF RECORD:	ECM

REVISIONS

REV	DESCRIPTION	BY	DATE	APPROV.

ELECTRICAL SPECS & SCHEDULES
E-3

ADDITIVE ALTERNATE NO. 1, ADDENDUM 2

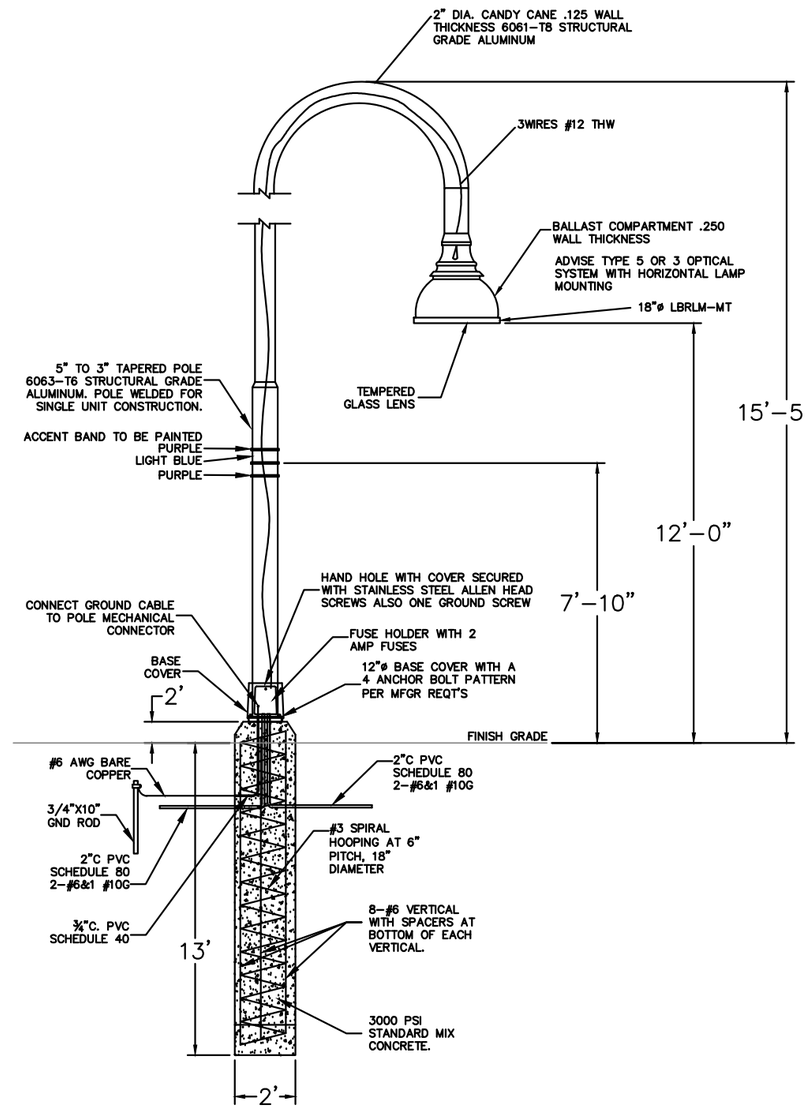

POLE LIGHT DETAIL

NOTE
CONTRACTOR TO VERIFY ALL UNDERGROUND UTILITIES PRIOR TO DRILLING FOR THE LIGHT FOUNDATIONS.

STATE OF TEXAS
EDWARD C. MONACO
57786
REGISTERED PROFESSIONAL ENGINEER
Edward C. Monaco
04-14-2015

INSPECTION NOTE:

IT IS ESSENTIAL THAT AN INSPECTION OF THE PROPOSED CPS ELEC. CONDUITS AND STLT FOUNDATIONS BE MADE BY A CPS ENERGY INSPECTOR BEFORE AND AFTER THE POURING OF CONCRETE AND BACKFILL OF TRENCH. IF APPLICABLE CALL FOR INSPECTION AGAIN IF FLOWABLE FILL IS NEEDED, CALL 353-3373 TO ARRANGE FOR THE INSPECTION.TWENTY FOUR HOURS ADVANCE NOTICE IS REQUIRED. WHEN CALLING FOR AN INSPECTION BE PREPARED TO REFERENCE WORK REQUEST NUMBER AND ADDRESS SHOWN ON THIS COPY. CALL BETWEEN 7:00 A.M. AND 2:30 P.M. MONDAY – FRIDAY.

Edward C. Monaco P.E.
2115 Anchor Drive, Ste #3
San Antonio, Texas 78213
210-541-0200
Firm Registration # F-8297

PROJECT NAME:
CITY OF SAN ANTONIO DEPARTMENT OF TRANSPORTATION & CAPITAL IMPROVEMENTS
WILSON BLVD. (CLUB-DONALDSON) & THESPIAN ISLAND(40-00322)

DATE:	04-01-2015	PROJECT START DATE:	-
DESIGNED BY:	ECM	PROJECT NUMBER:	2015
DRAWN BY:	ECM/VA	ENGINEER OF RECORD:	ECM
CHECKED BY:	ECM		

REVISIONS

REV	DESCRIPTION	BY	DATE	APPROV.

ELECTRICAL DETAILS
E-4

ADDITIVE ALTERNATE NO. 1, ADDENDUM 2

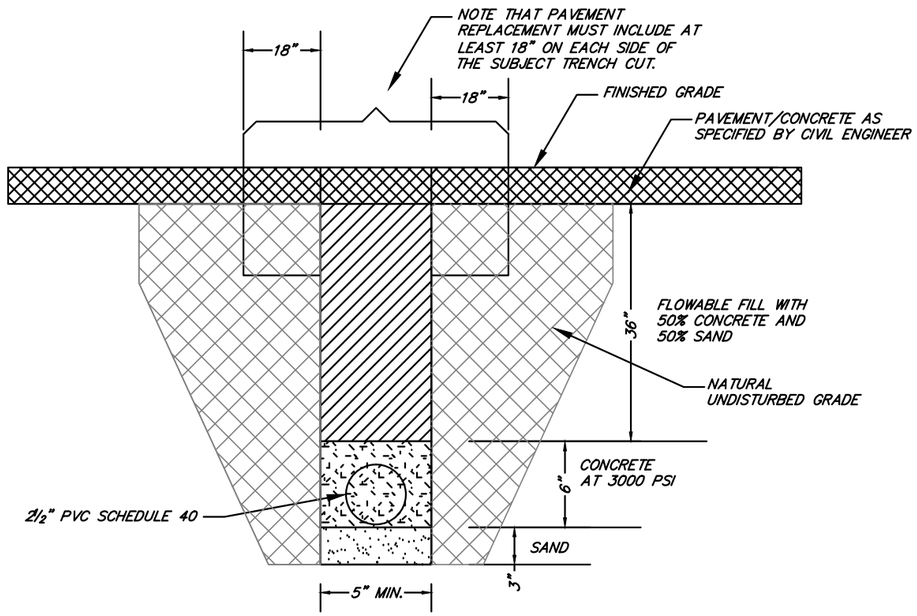

TRENCH DETAIL - STREET CUT

No Scale

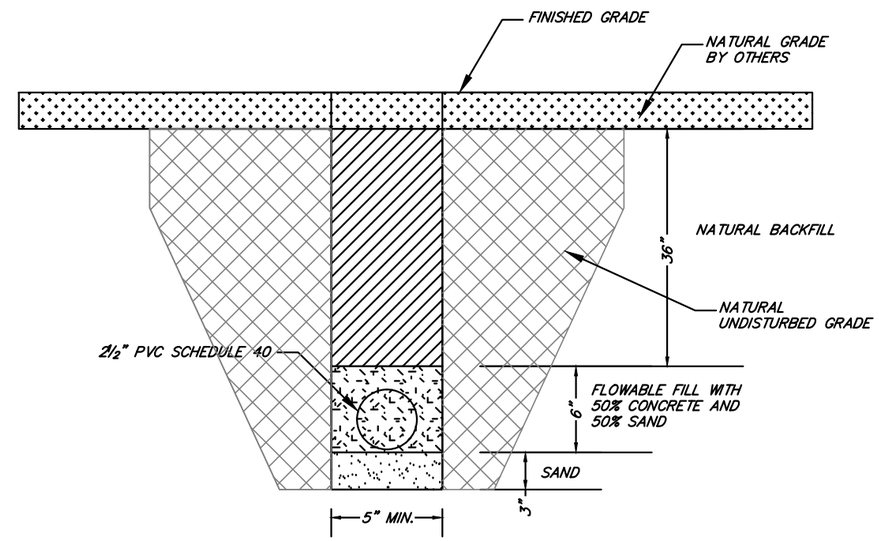

TRENCH DETAIL - NATURAL GRADE CUT

No Scale

STATE OF TEXAS
EDWARD C. MONACO
57786
REGISTERED
PROFESSIONAL ENGINEER

Edward C. Monaco
04-14-2015

Edward C. Monaco P.E.
2115 Anchor Drive, Ste #3
San Antonio, Texas 78213
210-541-0200
Firm Registration # F-8297

PROJECT NAME:
CITY OF SAN ANTONIO DEPARTMENT OF TRANSPORTATION & CAPITAL IMPROVEMENTS
WILSON BLVD. (CLUB-DONALDSON) & THESPIAN ISLAND(40-00322)

DATE:	04-01-2015
DESIGNED BY:	ECM
DRAWN BY:	ECM/VA
CHECKED BY:	ECM
PROJECT START DATE:	-
PROJECT NUMBER:	2015
ENGINEER OF RECORD:	ECM

REVISIONS

REV.	DESCRIPTION	BY	DATE	APPROV.

ELECTRICAL DETAILS
E-5

ADDITIVE ALTERNATE NO. 1, ADDENDUM 2

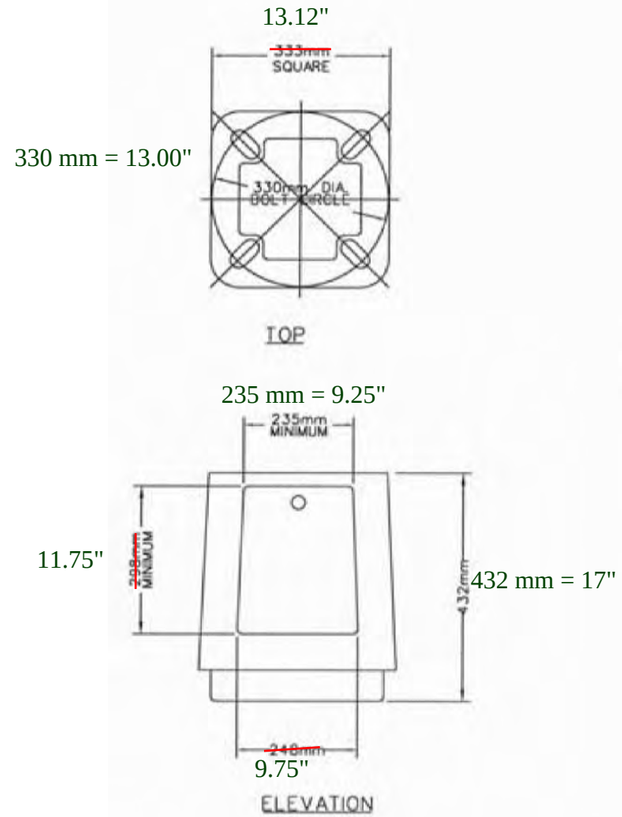

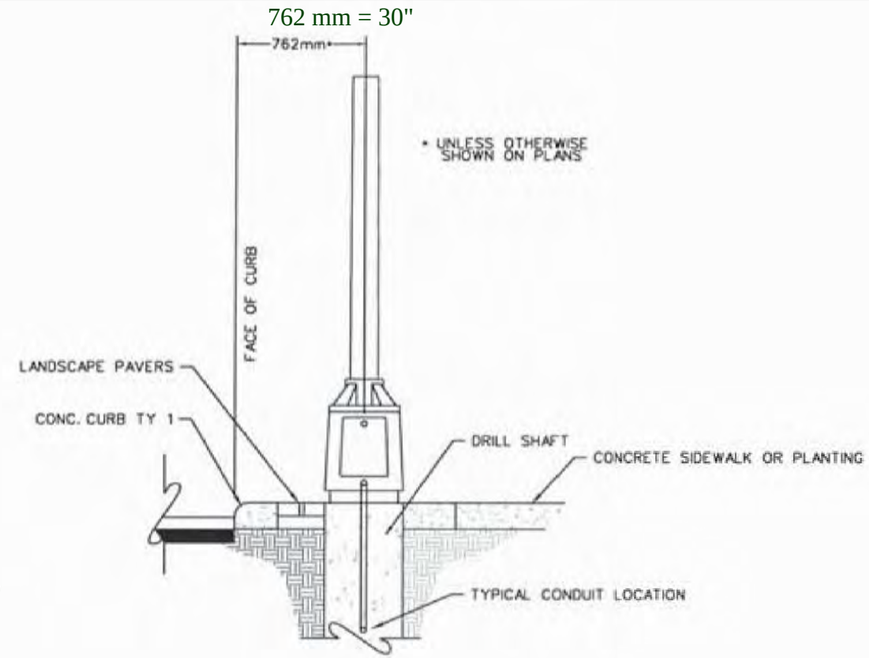

ILLUMINATION OFFSET DETAIL

N.T.S.

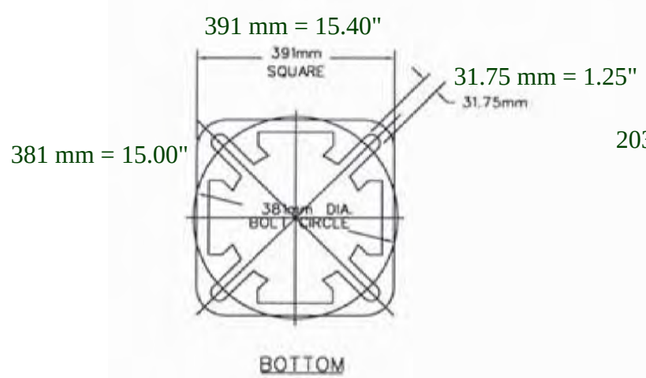

CPS MATERIAL NO. 1033433

TRANSFORMER BASE DETAIL

N.T.S.

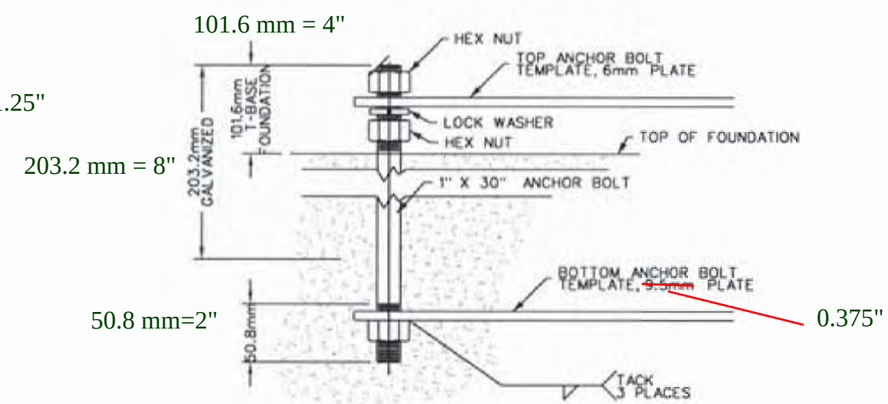

ANCHOR BOLT DETAIL

N.T.S.

Edward C. Monaco P.E. 2115 Anchor Drive, Ste #3 San Antonio, Texas 78213 210-541-0200 Firm Registration # F-8297	PROJECT NAME: CITY OF SAN ANTONIO DEPARTMENT OF TRANSPORTATION & CAPITAL IMPROVEMENTS WILSON BLVD. (CLUB-DONALDSON) & THESPIAN ISLAND(40-00322)	DATE: 04-01-2015 DESIGNED BY: ECM DRAWN BY: ECM/VA CHECKED BY: ECM	PROJECT START DATE: - PROJECT NUMBER: 2015 ENGINEER OF RECORD: ECM	REVISIONS REV. / DESCRIPTION / BY / DATE / APPROV.	**ELECTRICAL DETAILS E-6**

ADDITIVE ALTERNATE NO. 1, ADDENDUM 2

DISCLAIMER: The use of this standard is governed by the "Texas Engineering Practice Act". No warranty of any kind is given or implied with respect to the accuracy, completeness, or suitability for any purpose of this standard to other formats or for incorrect results or damages resulting from its use.

I. GENERAL REQUIREMENTS FOR ALL ELECTRICAL WORK

The location of all conductors, conduits, junction boxes, ground boxes, and electrical services is diagrammatic only and may be shifted by the Engineer to accommodate local conditions.

Materials shall be new and unused. Materials and installation shall comply with the applicable provisions of the National Electrical Code (NEC), National Electrical Manufacturers Association (NEMA) standards, and shall be Underwriters Laboratories (UL) Listed unless otherwise shown on the plans or specifications or approved by the Engineer in writing. Faulty fabrication or poor workmanship in any material, equipment, or installation shall be justification for rejection. When reference is made to UL, it can be considered to mean a Nationally Recognized Independent Testing Lab (NRTL). Comparable standards of Canadian Standard Association, Electrical Testing Laboratories or Factory Mutual can be equal to the referenced UL standard. Where reference is made to NEMA listed devices, IEC listed devices shall not be considered to be an acceptable equal to a NEMA listed device. Acceptable devices may have both a NEMA and IEC listing.

With the exception of high strength bolts, miscellaneous nuts, bolts and hardware may be stainless steel when plans specify galvanized, provided that bolts are 1/2 inch or less in diameter. The Contractor shall provide the following electrical test instruments as required by the Engineer to confirm compliance with the contract and the NEC. Those test instruments are voltmeter, amp probe, megger (1000 volt DC) and torque wrenches. All meters shall have been properly calibrated within one year. Calibration certification shall be provided to the Engineer upon request. Calibration certification tag shall also be applied to the meter. The Contractor shall operate meters during inspection as requested by the Engineer. Grounding shall be as shown on the plans and in accordance with the NEC. Metallic conduit, light poles, luminaires on bridge structures, and all metal enclosures shall be bonded to the system-grounding conductor. The ground rod in each ground box or junction box at the bridge ends, and in each ground box installed for underpass lighting will also be bonded to the system grounding conductor. The grounding conductor shall be bare or, if insulated, shall be green. Ground rods, connectors, and bonding jumpers will not be paid for separately, but will be subsidiary to the various bid items.

SUBMITTALS:

The contractor shall submit for approval six (6) copies of catalog cut sheets for each of the following three (3) categories.
Category 1. Electrical services including photocell.
Catagory 2. Breakaway disconnects, heat shrink tubing, heat shrink filler tape, GelCaps and ground boxes which will include loading capacity certification.
Category 3. Highmast assembly kits, when applicable. See Item 614 "Highmast Illumination Assemblies". Submittals shall be legible and shall be marked to indicate which product on a cut sheet is to be supplied. Where manufacturers provide warranties and guarantees as a customary trade practice, the Contractor shall furnish to the State such warranties and guarantees.
Any deviation from plans or specifications, including deviations due to plan error should be prominently displayed on the submittal. Any changes not prominently noted in submittal and incorporated into the work without proper authorization will constitute grounds for rejection of that portion of the work.

II. CONDUIT

A. MATERIALS

1. Conduit and fittings shall be UL Listed for the intended use shown on plan sheets.
2. Conduit shall be the type shown by descriptive code or shown elsewhere on the plans. Substitution of the various types of conduits will not be permitted. All flexible conduit in rigid metallic conduit (RMC) systems shall be Liquidtight Flexible Metal (LFMC) conduit. All flexible conduit in PVC systems shall be Liquidtight Flexible Non-metallic conduit (LFNC).
3. All exposed conduits shall be RMC, unless otherwise specifically shown on the plans. All metal conduit shall be properly grounded.
4. Couplings, connectors, conduit bodies, grounding bushings, and offset nipples for RMC shall be electro-zinc plated steel or hot dipped galvanized malleable iron, threaded or threadless compression type, rain-tight and shall be UL listed for the intended use.
5. Expansion joints for metal conduit shall be provided with an internal or external bonding jumper and shall be UL listed.
6. Unless otherwise shown on the plans, junction box minimum sizes shall be in accordance with the following table which applies to the greatest number of conductors entering the box through one conduit with no more than four conduits per box. When a mixture of conductor sizes are present, the conductors shall be counted as if all are of the larger size. Situations not applicable to the table shall be sized in accordance with NEC 370-28.

AWG	3 CONDUCTORS	5 CONDUCTORS	7 CONDUCTORS
#1	10" x 10" x 4"	12" x 12" x 4"	16" x 16" x 4"
#2	8" x 8" x 4"	10" x 10" x 4"	12" x 12" x 4"
#4	8" x 8" x 4"	10" x 10" x 4"	12" x 12" x 4"
#6	8" x 8" x 4"	10" x 10" x 4"	10" x 10" x 4"
#8	8" x 8" x 4"	8" x 8" x 4"	10" x 10" x 4"
		8" x 8" x 4"	8" x 8" x 4"

7. RMC system junction boxes equal to or smaller, in any dimension, than 12 x 12 x 6 (HxWxD), surface mounted and containing conductors #8 or larger, shall be hot dipped galvanized cast iron with minimum wall thickness of 3/16 inch, shall have external mounting lugs, and shall be UL listed Crouse-Hinds Type WAB, OZ/Gedney Type YS or approved equal. Unless otherwise shown elsewhere on the plans, RMC system junction boxes larger than the aforementioned boxes but equal to or smaller, in any dimension, than 18 x 18 x 6 (HxWxD) shall be 14-ga. stainless steel; RMC system junction boxes larger than 18 x 18 x 6 (HxWxD) shall be 12-ga. stainless steel. All metal junction boxes shall be equipped with a threaded hole or lug for grounding. Stainless steel boxes 12 x 12 x 6 and larger need not be UL listed but shall meet the other requirements of the NEC and shall have ribs, stiffeners, or thicker metal and shall have external mounting feet. Junction boxes with an internal volume of more than 100 cu. in. may be supported by connection of two or more rigid metal conduits, where specifically shown on the plans or where approved by the Engineer.
8. Junction boxes containing only #10 or #12 AWG conductors shall be Crouse Hinds Type GRFX, Appleton Type JBOX, two-gang FD, or similar approved cast iron box. Boxes shall be sized according to NEC Table 370-16(a).
9. IMC and EMT conduit shall not be used unless specifically required by the plan layout sheets. Junction boxes in EMT conduit systems shall be made from galvanized sheeting and shall be UL listed and approved for outdoor use, unless otherwise noted on the plans. Sheet metal junction boxes shall be sized in accordance with the NEC. Junction boxes for IMC conduit systems shall meet the requirements of boxes used with RMC systems.
10. Junction boxes in PVC conduit systems shall be PVC, intended for outdoor use, unless otherwise noted on the plans.
11. Elbows in PVC conduit systems one inch and larger shall be rigid metal, with the exception of traffic signal systems which may have PVC elbows instead of rigid. If any part of the rigid metal elbow is buried less than 18 inches underground the elbow and rigid metal extension shall be grounded. Grounding shall be accomplished by means of a grounding bushing installed on the extension. Unless specifically shown on the plans, rigid metal elbows containing, or entering ground boxes containing only communications conductors, loop detectors, or other low voltage power limited circuits need not be grounded unless a ground wire is present in the conduit or ground box. The rigid metal elbows located in concrete foundations may be extended with PVC conduit and need not be grounded provided that the end of the elbow nearest the end of the conduit run exiting the foundation is at least 2 inches below the concrete. RMC elbows will not be eliminated. RMC elbows will not be paid for directly, but will be subsidiary to various bid items.
12. High-Density Polyethylene (HDPE) conduit shall meet the requirements of Item 622, Duct Cable, except that the HDPE conduit, when bid under Item 618, Conduit, shall not contain factory installed conductors. Fittings for HDPE conduit shall be UL listed as an electrical conduit connector or shall be thermally fused using an electrically heated wound wire resistance welding method. HDPE conduit may be substituted for bored schedule 40 or schedule 80 PVC conduit. When such substitution is made, bored HDPE shall be schedule 40 of the size PVC being replaced. The HDPE conduit shall transition to PVC (or RMC elbow when required) at the bore pit. Size and schedule shall be as shown on the plans. Substituted conduit may not be extended to ground boxes or foundations; RMC elbows shall be installed at ground boxes and foundations. RMC elbows will not be eliminated.
13. All conduit support hardware including straps, nuts, bolts, screws, retaining anchors and washers shall be hot dipped galvanized or stainless steel. Strut type conduit straps shall be stainless steel or hot dipped galvanized. Strut type straps need not be made of malleable type material. Stamped-cadmium plated straps will not be allowed. Straps having only one mounting hole shall not be allowed for use on conduits 2 inches and larger with the exception of electrical service poles where stainless steel standoff straps will be allowed. Two piece conduit straps designed to be used with a mounting shoe shall be installed only with the correctly sized shoe.

B. CONSTRUCTION METHODS

1. Conduit in structures shall have expansion fittings at structure expansion joints. All straight runs of RMC conduit exposed on structures such as bridges shall have expansion joints installed at maximum intervals of 150 feet. Expansion joints shall be installed so they allow for movement of the conduit. Installation of the joint in such a manner that will not allow for movement shall be repaired at no expense to the state. The method of determining the final setting length of the expansion joint shall be provided to the Engineer upon request.
2. Conduit supports shall be spaced at maximum intervals of 5 feet. Conduit spacers shall be used with metal conduit placed on surfaces of concrete structures (See conduit mounting options).
3. Conduit supports shall not be attached directly to prestressed concrete beams except as shown specifically in the plans and approved by the Engineer.
4. Unless otherwise shown on the plans, conduit placed beneath existing roadways, driveways, or sidewalks, or after the base or surfacing operation has begun, shall be accomplished by jacking or boring. The Contractor shall back fill and compact the bore pits to the bottom of the conduit prior to installing connecting conduit or duct cable to prevent bending of the connection.
5. Conduit trenched in the subgrade of new roadways shall be backfilled with excavated material, unless otherwise noted on the plans. Conduit trenched in the sub-base of new roadways shall be backfilled with cement-stabilized base.
6. Open ends of all conduit and raceways shall be fitted with temporary caps or plugs to prevent entry of dirt, debris and rodents during construction. The temporary cap may be constructed of duct tape, but in all cases shall be tightly fixed to the conduit and shall be durable. The contractor shall clean out the conduit and prove it clear in accordance with Standard Specifications Item 618.3 prior to installing any conductors.
7. Conduit entry into the top of enclosures such as safety switches, meter cans, service enclosures, auxiliary enclosures and junction boxes shall be made weatherproof using conduit sealing hubs, or threaded bosses.
8. A bonding jumper shall be installed from each grounding bushing to the nearest grounding rod, grounding lug, and/or equipment grounding conductor. All jumpers shall be the same size as equipment grounding conductor. Conduit used as casing under roadways for duct cable need not be grounded if duct extends full length through the casing. At electrical services, grounding electrode conductor shall be a solid Copper #6 AWG.
9. Metal junction boxes shall be bonded to the grounding conductor in accordance with the NEC.
10. Conduits entering ground boxes shall be placed so that the conduit ends shall be not less than 3 inches nor more than 6 inches from bottom of box (See ground box detail on sheet ED(3).
11. Conduit ends shall be sealed with heat shrink boots with waterproof sealant, urethane foam, or by other methods approved by the Engineer. Sealing shall be done after completion of any required pull tests. Duct tape shall not be used as a permanent conduit sealant. Silicone caulking shall not be used as a sealant.
12. All strut mounting material and hardware shall be hot-dip galvanized or shall be stainless steel. The cut ends of strut and non-galvanized rigid metal conduit threads shall be coated with a zinc rich paint (90% or more zinc content). Zinc rich paint may only be used to touch up galvanized material as allowed under item 445.6 galvanizing. The painting of non-galvanized material with a zinc rich paint shall not be considered as an approved alternative for galvanized materials.
13. All PVC conduit terminations shall be fitted with bushings or bell ends. All metal conduit terminations shall be fitted with a grounding type bushing.

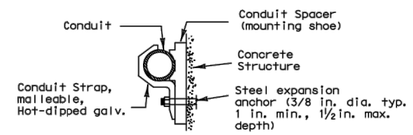

CONDUIT MOUNTING OPTIONS

(Attachment to concrete surfaces)
(See para. II.B.2)

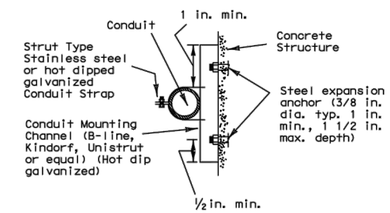

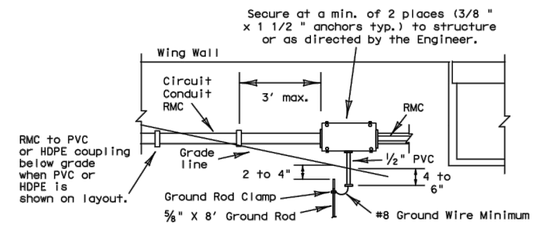

TYPICAL CONDUIT ENTRY TO BRIDGE STRUCTURE DETAIL

NOTES

1.) Ground rod clamp to be UL listed for direct burial.
2.) For conduit placed in structure, use flush-mounted box.
3.) Bond junction box and metal conduits to equipment grounding conductor and grounding electrode conductor using listed connector.
4.) Seal all conduits entering the junction box from underground.
5.) Install bell end or bushing on 1/2 " PVC conduit both ends.
6.) Ground rod to be driven within 8 inches of 1/2 inch PVC conduit end.

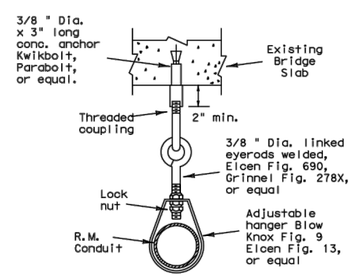

CONDUIT HANGER DETAIL

(Attachment to horizontal surfaces)
Hangers need not be UL listed for electrical use
ie: plumber pipe hangers are acceptable

5/03 Revision

Revised notes.

Texas Department of Transportation
Traffic Operations Division

ELECTRICAL DETAILS-CONDUIT

ED(1)-03

© TxDOT January 1992 | DN: TxDOT | CK: TxDOT | DW: TxDOT | CK: TxDOT

REVISIONS: 4-98, 12-00, 3-03, 5-03

CONT	SECT	JOB	HIGHWAY
DIST	COUNTY		SHEET NO.

71A

DATE:
FILE:

Edward C. Monaco P.E. 2115 Anchor Drive, Ste #3 San Antonio, Texas 78213 210-541-0200 Firm Registration # F-8297	PROJECT NAME: CITY OF SAN ANTONIO DEPARTMENT OF TRANSPORTATION & CAPITAL IMPROVEMENTS WILSON BLVD. (CLUB-DONALDSON) & THESPIAN ISLAND(40-00322)	DATE: 04-01-2015 DESIGNED BY: ECM DRAWN BY: ECM/VA CHECKED BY: ECM	PROJECT START DATE: - PROJECT NUMBER: 2015 ENGINEER OF RECORD: ECM

REVISIONS

REV.	DESCRIPTION	BY	DATE	APPROV.

ELECTRICAL DETAILS
E-7

ADDITIVE ALTERNATE NO. 1, ADDENDUM 2

DISCLAIMER: The use of this standard is governed by the "Texas Engineering Practice Act". No warranty of any kind is made by TxDOT for any purpose whatsoever. TxDOT assumes no responsibility for the conversion of this standard to other formats or for incorrect results or damages resulting from its use.

DATE:
FILE:

I. ELECTRICAL CONDUCTORS

A. MATERIALS

1. Insulated conductors shall be NEC Type XHHW. Insulated conductors shall be color coded in accordance with the NEC, articles 200, 250, and 310; i.e. Insulation of grounded conductors (neutrals) shall be white. Grounding conductors (ground wires) shall be bare or insulation shall be green. Insulation of ungrounded conductors (hots) shall be any color except green, white, or gray. Identification of conductors #6 American Wire Guage (AWG) and smaller shall be by continuous jacket color. Color coding of electrical conductors #4 AWG and larger shall be either by continuous color jacket or by colored tape. Colored tape marker shall consist of a half-lap of tape covering a 6-inch length of conductor.
2. Where two or more circuits are present in one conduit or enclosure, the conductors of each circuit shall be identified by a permanent non-metallic tag at each accessible location. The tag shall be fastened to the conductors by two plastic straps. Each tag shall indicate circuit number, letter, or other identification shown in the plans.
3. Grounding electrode conductor #6 AWG for bonding to ground rod at electrical service, shall be solid. Connection of conductor to ground rod shall be made using UL Listed connectors designed for such purposes.
4. Heat Shrink Tape filler shall be used to seal the ends of heat shrink tubing around two or more conductors that are insulated with heat shrink tubing. Tape material shall have a minimum dielectric strength of 225 volts per mil and shall be cross-linked butyl rubber. Tape shall be supplied in rolls and shall have a backing (release paper) to prevent the tape from sticking to itself.
5. Heat shrink tubing shall be heavy wall, UL listed for 600 volts or greater and shall have factory applied internal sealant.
6. GelCaps shall be UL listed for 600-volt applications. GelCap shall have see-through elastomer molded cover. Cover shall be filled with high dielectric insulating gel silicone sealant to provide waterseal. Cover shall be held in place by snap-lock, molded clamp made of UV stable polypropylene.
7. Splicing materials, insulating materials, breakaway disconnects, GelCaps and fuse holders will not be paid for directly but shall be subsidiary to various bid items.

B. CONSTRUCTION METHODS

1. After conductors have been installed in conduit, a pull test shall be made on conductors. When any length of conductor cannot be freely pulled, the Contractor shall make any needed alterations or repairs at no expense to the State.
2. The Contractor shall perform insulation resistance tests in accordance with Item 620, "Electrical Conductors." The Contractor shall coordinate with the Engineer to witness the tests.
3. A sufficient length of conductor for making up connections shall be left in ground boxes (2 feet minimum, 3 feet maximum, to point of splice, 3 feet minimum, 4 feet maximum, when conductor is pulled through with no splice), enclosures, weatherheads and pole bases (1 foot minimum, 1.5 feet maximum).
4. Splices shall be made only in junction boxes, ground boxes, pole bases, or electrical enclosures and shall be made with listed compression or screw type pressure connectors, terminal blocks, bolted lugs, or split bolt connectors. Splices shall be insulated with heavy wall heat shrink tubing or GelCaps and shall be made so as to provide a watertight splice. Heat shrink sleeve shall overlap conductor insulation a minimum of 2 inches on both sides of the splice. Where heat shrink tubing may not shrink sufficiently to provide a watertight seal around the individual conductors, prior to heating the tubing, the Contractor shall increase the diameter of the conductors insulation using heat shrink filler tape to provide a watertight seal between the individual conductors and the heat shrink tubing. Tape shall be visible after completion of all splices. Where filler tape is used but not visible, the Engineer shall approve each individual splice by conducting a physical inspection of each splice. When it appears the tubing has been burned, or overheated the tubing shall be considered to be defective and shall be replaced.
5. GelCaps when used in place of heat shrink method of splicing, shall be sized and installed according to manufacturer's specifications. (Raychem GelCap and GelCap SL or equal.)
6. Wire nuts may be used for #8 AWG or smaller conductors in above-ground junction boxes, but not in pole bases or ground boxes. Wire nuts shall be positioned upright to prevent the accumulation of water. Wire nuts used at these locations shall have factory applied waterproof sealant.
7. Conductors in illumination poles shall be supported by a J-hook in the top of the pole.
8. All conductors bid under Item 620 "Electrical Conductors" shall have breakaway electrical disconnects installed anytime conductors pass through a break-away support device.
9. For terminating the conductors, insulation-jacketing material shall be removed in such a manner as to not nick any of the individual strands of the conductor. When individual conductor strands are removed, the conductor shall be considered to be damaged.
10. When a conductor or cable has been damaged, or fails to pass an insulation resistance test, the conductor shall be replaced.
11. Duct tape, black electrical tape, or wire nuts shall not be used in the repair of a damaged conductor.
12. For terminations, no more than one wire may be installed under a single pressure connector, unless the device is listed for more than one wire.
13. Conductors connected to break-away in line fuse holders must be installed in accordance with the specific manufacturer's installation instructions. Where threaded connections are made, they shall be properly torqued. Where crimp type connections are made, crimps shall be made using properly sized crimping pliers. Proper conductor terminations are critical to the safe operation of break-away devices.
14. Waterproofing boots shall be properly trimmed to fit snugly around the conductor so as to provide a water proof connection. No more than one wire may enter a single opening in any one boot. Water proofing boots must provide the correct number of openings. Where only one wire is to be connected to a boot, the boot may not be a two wire type.
15. All conduits that contain circuit wiring of 50 volts or more shall contain an equipment grounding conductor (EGC). Conduit for traffic signals shall have an EGC, with a minimum size of #8 AWG stranded. Unless otherwise shown on the plans, the EGC for all other conduits shall be the same AWG size as the largest current carrying conductor contained in that conduit. The EGC shall be paid for item 620-Electrical Conductors.

C. TEMPORARY WIRING

1. Temporary conductors and electrical equipment to provide power for utilization equipment, shall be installed in accordance with the NEC article 305. All temporary wiring materials and methods shall comply with the standard sheets. All power outlets for portable electrical equipment, power tools, ice machines, ice storage bins and refrigerators located outdoors at grade, supplied from a utility power source, shall be provided with a ground fault circuit interrupter.
2. Residual current protective devices (GFCI) may be any one of the following: molded cord and plug set, receptacle, or circuit breaker type.
3. Where wire nuts are approved for temporary wiring, they shall be of the self-sealing type.
4. All conductor splices must be contained within a listed enclosure, ground box or the splices will be more than ten feet above grade vertically and more than five feet horizontally from any metal structure. Where temporary conductors are installed in any area that is likely to be subjected to vehicle traffic, or mobile construction equipment, the vertical clearance to ground shall be at least 18 feet when measured at the lowest point. Where power conductors are to be supported by a span wire, the span wire shall be properly grounded.
5. Existing conduit containing service conductors uncovered during the construction process shall be repaired in a timely manner in accordance with the NEC. Existing non-metallic conduit exposed during construction shall not be left exposed above grade, or with less than eighteen inches of cover, without protective methods approved by the Engineer.

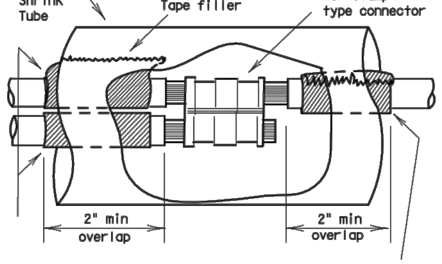

SPLICE OPTION 1

C-CLAMP

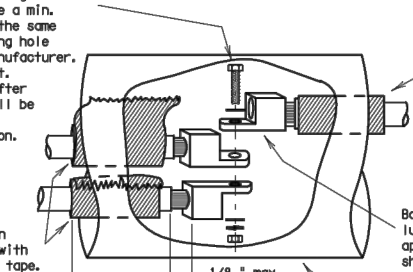

SPLICE OPTION 2

BOLTED WIRE LUGS

SPLICE OPTION 3

SPLIT BOLT

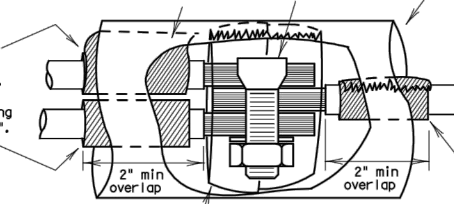

SPLICE OPTION 4

GELCAP

GelCap shall be sized and installed according to manufacturers specifications

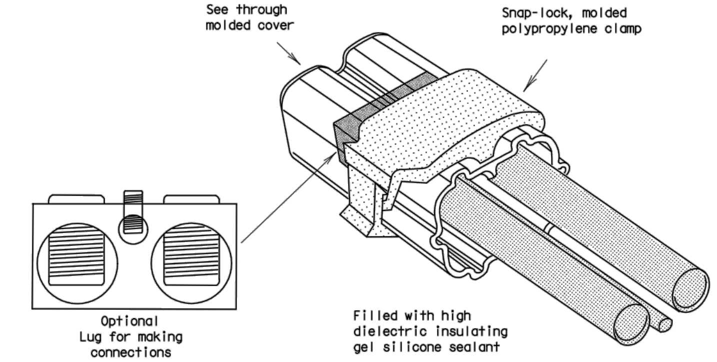

Texas Department of Transportation
Traffic Operations Division

ELECTRICAL DETAILS-
CONDUCTORS

ED(2)-03

©TxDOT January 1992	DN: TXDOT	CK: TXDOT	DW: TXDOT	CK: TXDOT
REVISIONS 10-93 4-98 12-00 3-03	CONT	SECT	JOB	HIGHWAY
	DIST	COUNTY		SHEET NO.

71B

Edward C. Monaco P.E.
2115 Anchor Drive, Ste #3
San Antonio, Texas 78213
210-541-0200
Firm Registration # F-8297

PROJECT NAME:
CITY OF SAN ANTONIO DEPARTMENT OF TRANSPORTATION & CAPITAL IMPROVEMENTS
WILSON BLVD. (CLUB-DONALDSON) & THESPIAN ISLAND(40-00322)

DATE:	04-01-2015	PROJECT START DATE:	-
DESIGNED BY:	ECM	PROJECT NUMBER:	2015
DRAWN BY:	ECM/VA	ENGINEER OF RECORD:	
CHECKED BY:	ECM		ECM

REVISIONS

REV	DESCRIPTION	BY	DATE	APPROV.

ELECTRICAL DETAILS
E-8

ADDITIVE ALTERNATE NO. 1, ADDENDUM 2

DISCLAIMER: The use of this standard is governed by the "Texas Engineering Practice Act". No warranty of any kind is made by TxDOT for any purpose whatsoever. TxDOT assumes no responsibility for the conversion of this standard to other formats or for incorrect results or damages resulting from its use.

DATE:
FILE:

II. GROUND RODS

A. MATERIALS

1. All ground rods installed at electrical services, including supplemental lightning protection ground rods specified by the plans in other locations such as pole bases, shall be copper clad and UL listed. Rods shall be a minimum diameter of 5/8 inch. The length shall be a minimum of 8 feet. Larger diameter or longer length rods may be called for in some specific locations, see the individual plans sheets.
2. Ground rod clamps shall be listed to be in direct contact with the soil. Where concrete encasement is required, the clamp shall be listed for concrete encasement.

B. CONSTRUCTION METHODS

1. Ground rods installed in locations such as pole bases, to provide supplemental lightning protection need not be totally in contact with the soil. Where called for in the plans, rods may be encased in soil or concrete or any combination of soil and concrete. When concrete encased, the connection of the conductor to the rod shall be readily accessible for inspection or repairs. When driven into the soil the upper end shall be between 2 to 4 inches below finished grade. Ground rods shall not be placed in the same drilled hole as a timber pole.
2. Ground rods shall be installed such that the end imprinted with the rod's part number is installed as being the upper end.
3. Non-conductive coatings such as concrete splatter shall be removed from the rod at the clamp location.
4. Routing of lightning protection ground rod wires shall be run as short and straight as possible. Where bends are required they shall have a minimum radius of four inches.
5. Unless specifically called for by the plans, conduits used for ground rod wires shall be non-metallic. Where metal conduits are specified, a grounding bushing and properly sized bonding jumper shall be provided and properly installed on each end.
6. Where rocky soil or a solid rock bottom is encountered when driving a ground rod and the horizontal trench placement method is the only viable solution, written authorization from the Engineer must be obtained.

III. GROUND BOX

A. MATERIALS

1. Ground boxes 16x30x24 inches (WxLxD) or smaller shall be polymer concrete of the type required by the descriptive code shown elsewhere. Larger ground boxes shall be as shown elsewhere in the plans.
2. All ground boxes and covers shall be permanently marked either by impress or by permanent ink, with manufacturer's model number and manufacturer's name or logo.
3. Covers shall be bolted down, and bolt holes in the box shall be arranged to drain dirt.
4. Ground box Types A, B, C, D & E shall meet the following requirements:
   a. Ground boxes and covers be manufactured from polymer concrete reinforced with continuous strands of woven or stitched borosilicate fiberglass cloth. The polymer concrete shall be made from catalyzed polyester resin, sand and aggregate, and shall have a minimum compressive strength of 11,000 psi. Polymer concrete containing chopped fiberglass or fiberglass reinforced plastic is not acceptable.
   b. Minimum inside dimensions shall be as follows (width x length x depth):
      Type A shall be 11.5 inches x 21 inches x 10 inches, (122311)
      Type B shall be 11.5 inches x 21 inches x 20 inches, (122322)
      Type C shall be 15.25 inches x 28.25 inches x 10 inches, (162911)
      Type D shall be 15.25 inches x 28.25 inches x 20 inches, (162922)
      Type E shall be 11.5 inches x 21 inches x 16 inches, (122317)
   c. Bottom edge of box or extension shall be footed with a minimum 1 1/4 inch flange.
   d. Ground boxes shall withstand 600 lbs. per sq. ft. applied over the entire sidewall with less than 1/4 inch deflection per foot length of box. Ground boxes and covers shall withstand a test loading of 20,000 lbs. over a 10 inch by 10 inch area centered on the cover with less than 1/2 inch deflection. Ground boxes and covers shall meet Western Underground Standards 3.6. Manufacturer shall supply certification by an independent laboratory or sealed by a Texas-Licensed Professional Engineer.
   e. Covers shall be 2 inch (nominal) thick polymer concrete. All hardware shall be stainless steel. Cover shall be secured with two 1/2 inch stainless steel bolts. Bolts shall be self-retaining and shall withstand a minimum of 70 ft-lbs. torque and shall have a minimum 750 lbs. straight pull out strength. Nuts shall be floating and shall provide a minimum of 1/2 inch movement from the center of the nut. Covers shall be skid resistant, minimum 0.5 coefficient of friction. Covers shall be interchangeable between manufacturers and shall conform to the dimensions shown herein. Unless otherwise approved by the Engineer, cover shall be legibly imprinted with the following words in minimum 1 inch letters:
      Ground Boxes containing wiring for traffic signals shall be labeled, Danger High Voltage Traffic Signal.
      Ground boxes containing wiring for illumination systems shall be labeled, Danger High Voltage Illumination.
      Ground boxes containing wiring for traffic management systems shall be labeled, Danger High Voltage Traffic Management.
      Ground boxes containing wiring for sign illumination systems shall be labeled, Danger High Voltage Sign Illumination.
      Ground boxes containing wiring for traffic signals that also contain illumination, powered by the signal electrical service, shall be labeled, Danger High Voltage Traffic Signal.

B. CONSTRUCTION METHODS

⚠1
1. Ground boxes shall be set on a 9 inch (minimum) bed of aggregate from 3/4 " up to 2" in size. Aggregate shall be in place prior to setting box and conduits shall be capped. Any gravel or dirt in conduit shall be removed.
2. When required by Item descriptive code, construction of an apron encasing a ground box including concrete and reinforcing steel shall not be paid for directly but shall be subsidiary to the ground box. Reinforcing steel may be field bent. Concrete for aprons shall be considered miscellaneous concrete for testing purposes. Aprons shall be cast in place.
3. Conduit holes may be cut in the walls of type B & D boxes at least 18 inches beneath the cover.
4. If, within the limits of this project, the Contractor must utilize an existing ground box equipped with a metal cover, the Contractor shall bond the cover to the grounding conductor with a 3 foot long flexible stranded jumper the same size as the grounding conductor. Connection of bonding jumper to metal ground cover shall not be paid for directly but shall be subsidiary to various bid items. The box(es) must be clearly shown on the plans with plan notes fully describing the work required.
5. If there are other ground boxes with metal Covers within the project limits but not involved in the contract, the Engineer may direct the Contractor to ground the covers, designating and identifying the specific boxes in writing. This work will be paid for separately.
6. Termination to metal ground box covers shall be made using a tank ground type lug.

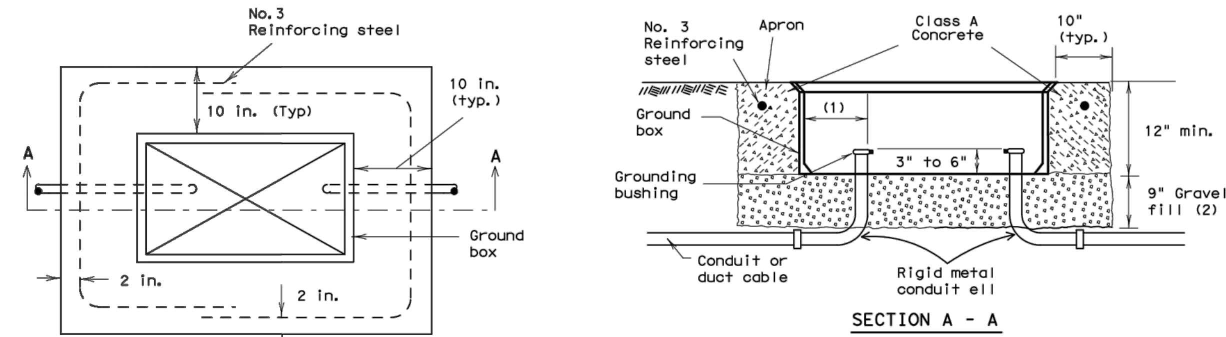

APRON FOR GROUND BOXES

(Where required)

(1) Final position of end of conduit shall not exceed one-half the distance to the side of box opposite the conduit entry.
(2) Place gravel "under" the box. not "in" the box. Gravel should not encroach on the interior volume of the box.
(3) Install bushing on the upper end of all ells.
(4) Where a ground rod is present in the ground box, connect it to any and all equipment grounding conductors using a listed connector.
(5) Maintain sufficient space between all conduits so as to allow for proper installation of bushings.
(6) All conduits shall be installed in a neat and workmanlike manner.
(7) All conduits installed in the ground box shall be sealed after completion of conductor installation and any required pull tests. Silicone shall not be used as sealant.

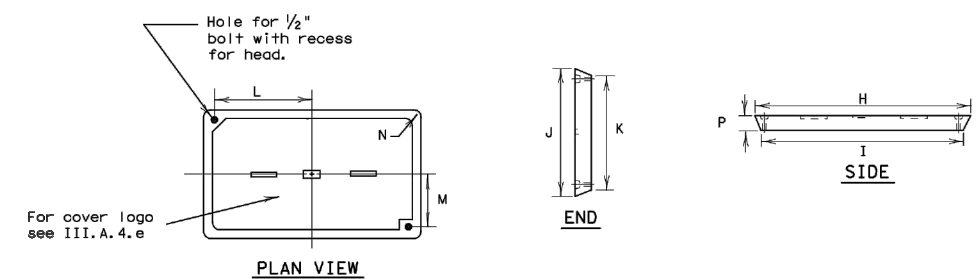

GROUND BOX COVER

GROUND BOX COVER DIMENSIONS								
BOX	DIMENSIONS (INCHES)							
SIZE	H	I	J	K	L	M	N	P
A, B & E	23 1/4	23	13 3/4	13 1/2	9 7/8	5 1/8	1 3/8	2
C & D	30 1/2	30 1/4	17 1/2	17 1/4	13 1/4	6 3/4	1 3/8	2

5/03 Revision
⚠1 Revised notes.

Texas Department of Transportation
Traffic Operations Division

ELECTRICAL DETAILS-
GROUND BOXES

ED(3)-03

© TxDOT January 1992 | DN: TXDOT | CK: TXDOT | DW: TXDOT | CK: TXDOT
REVISIONS: 4-98, 12-00, 3-03, 5-03
CONT | SECT | JOB | HIGHWAY
DIST | COUNTY | SHEET NO.

71C

Edward C. Monaco P.E.
2115 Anchor Drive, Ste #3
San Antonio, Texas 78213
210-541-0200
Firm Registration # F-8297

PROJECT NAME:
CITY OF SAN ANTONIO DEPARTMENT OF TRANSPORTATION & CAPITAL IMPROVEMENTS
WILSON BLVD. (CLUB-DONALDSON) & THESPIAN ISLAND(40-00322)

DATE: 04-01-2015
DESIGNED BY: ECM
DRAWN BY: ECM/VA
CHECKED BY: ECM

PROJECT START DATE: -
PROJECT NUMBER: 2015
ENGINEER OF RECORD: ECM

REVISIONS

REV	DESCRIPTION	BY	DATE	APPROV.

ELECTRICAL DETAILS
E-9

ADDITIVE ALTERNATE NO. 1, ADDENDUM 2

DISCLAIMER: The use of this standard is governed by the "Texas Engineering Practice Act". No warranty of any kind is made by TxDOT for any purpose whatsoever. TxDOT assumes no responsibility for the conversion of this standard to other formats or for incorrect results or damages resulting from its use.

DATE:
FILE:

ELECTRICAL SERVICES NOTES

All work, materials, services, and incidentals, whether or not specifically shown on the plans, which may be necessary for a complete and proper electrical service installation as specified in the plans to obtain electrical power shall be paid for, performed, furnished and installed by the Contractor. The Contractor shall contact the Utility for metering and shall comply with all Utility requirements.

Primary line extensions, connection charges, meter charges, and other charges by the Utility company to provide power to the location shown, when required, shall be paid for under force account work. The costs associated with these charges shall be approved by the Engineer prior to engaging the Utility company to do the work. The Contractor shall consult with the appropriate Utility to determine costs and requirements, and shall coordinate the Utility's work as approved by the Engineer. The Contractor shall be reimbursed only the amount billed by the Utility. No additional amount for supervision of the Utility's work will be paid.

Materials shall be new and unused, materials and installation shall comply with the applicable provisions of the National Electrical Code (NEC) and National Electrical Manufacturers Association (NEMA) standards and shall be Underwriters Laboratories (UL) Listed. Electrical Service conduits, conductors, disconnects, contactors, circuit breaker panel sizes, and branch circuit breakers, shall be as shown in the Electrical Service Data elsewhere in the plans. Faulty fabrication or poor workmanship in any material, equipment, or installation shall be justification for rejection.

The Contractor shall submit for approval no less than six (6) copies of catalog cut sheets on electrical service materials. Submittals shall be legible and shall be marked to indicate which product on a cut-sheet is to be supplied. Where manufacturers provide warranties and guarantees as a customary trade practice, Contractor shall furnish to the State such warranties or guarantees.

The Contractor shall provide locks keyed with Master #2195 for all lockable electrical enclosures. Keys and locks become property of the State. Unless otherwise approved by the Engineer, enclosures shall not be energized until locks are provided and all bolts are installed.

Circuit directories, where provided, shall be filled out. All breakers and components in shop built panels and enclosures shall be labeled with dua-colored plastic labels. Letters shall be a minimum 3/8 " in height.

Enclosures with external disconnects that de-energize all equipment inside the enclosure, need not have dead front trim, except that incoming line terminations shall be protected from incidental contact.

When galvanized is specified for nuts, screws, bolts or miscellaneous hardware, stainless steel may be used. All wiring and components shall be rated for 75 degrees C. Minimum size for service entrance conductors shall be #6 XHHW.

I. Safety Switch. A safety switch, placed ahead of the meter, shall only be used when specified by the Utility and when shown on the Electrical Service Data. The switch shall be UL Listed, heavy duty type, 600 volt, unfused, with a UL type 3R enclosure and equipped with a solid neutral (s/n) assembly. The switch shall be padlockable in the "on" position.

II. Service Type. Electrical service types A, C, D, and T shall be as schematically detailed on ED(4) or ED(5). Other service types shall be as detailed elsewhere on the plans.

III. Branch Circuit Breakers. Circuit breakers shall be thermal magnetic and have a minimum interrupting capacity of 10,000 amps and a voltage rating compatible with their use. Circuit breakers shall be sized as shown in the electrical service data. Circuit breakers in panelboards and load centers shall be full size and designed exclusively for the panelboard or load center in use. Tandem and half-width breakers shall not be used. All circuit breakers shall be permanently and clearly marked identifying the circuit or device supplied. Circuit breakers shall be UL Listed to UL489.

IV. Circuit Breaker Panelboard. Panelboards shall be UL Listed. Panelboards shall have copper busses, a minimum of 6 one-pole spaces or as required in the electrical service data, and when required will be rated for service equipment. Enclosure shall meet or exceed UL type 3R classification. Panelboards shall have a threaded hub conduit entry for conduit entering the top of the enclosure. Circuit breakers shall be bolt-in type only.

V. Circuit Breaker Load Center. Load centers shall be UL Listed.
Load centers for type T services may have copper or aluminum busses, all other load centers will be copper bus only. Load center will have a minimum of 4 one-pole spaces, and shall be rated for service equipment. Enclosure shall meet UL type 3R classification. Load centers shall have a threaded hub conduit entry for conduit entering the top of the enclosure. Circuit breakers shall be plug-in type only. Load centers for type T services shall accomodate a maximum of 6 one-pole breakers.

VI. Separate or Auxiliary Enclosure. Separate enclosures for HOA, photocell and lighting contactors for types D & T Services shall be a UL Listed assembly with outer door. Interior shall have dead front trim. HOA switch operator shall extend through the dead front trim. Photocell shall be mounted inside the enclosure as described in paragraph XIII when required by descriptive code. Separate enclosures shall meet the construction requirements of paragraph VIII. E, except that separate enclosure shall not have external operating handle, need not have a data pocket and door may latch at only one point. All equipment may be located in one enclosure instead of two, when approved by the Engineer.

VII. Where a Type D or T service is provided, laminated "as built" drawings are required as shown on ED(5) VIII E; shall be delivered before completion of the work, to the Engineer in lieu of placement within these smaller enclosures. Conduit may not enter the back wall of a service enclosure penetrating the equipment mounting panel. Provide grounding bushings on all metal conduits, terminate bonding jumper to grounding bus. Grounding bushing is not required when the end of the metal conduit is fitted with a conduit sealing hub or threaded boss such as a meter base.

EXPLANATION OF ELECTRICAL SERVICE DESCRIPTIVE CODE

ELEC SERV TY X (XXX/XXX) XXX (XX) XX (X) XX (X)

Example: ELEC SERV TY A(240/480)100(NS)SS(E)GC(O)

Schematic Type

Service Voltage (V / V)

Disconnect Amp Rating
(000 indicates main lug only)

SS= Safety switch ahead of meter
NS= No switch ahead of meter and/or no meter required

Enclosure Type
GS= Galvanized steel (see ED(5)VIII,D)
SS= Stainless steel
AL= Aluminum

Photocell Mounting Location
T= Top of pole
E= Inside service/separate enclosure
L= Luminaire mounted
N= None

Service Support Type
GC= Granite concrete
OC= Other concrete
TP= Timber pole
SP= Steel pole
SF= Steel frame
OT= Pole by others or paid for separately
EX= Existing pole
TS= Switch gear to be placed on traffic signal pole
RT= Rectangular structural tubing
PS= Pedestal Service (see ED(5)VIII,G)

O= Overhead service
U= Underground service

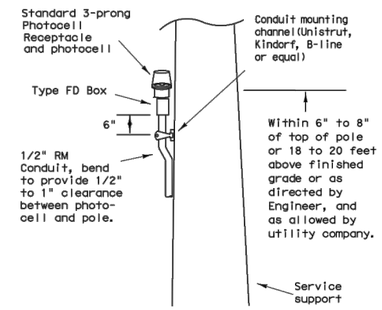

TOP MOUNTED PHOTOCELL

Conduit support spacing 3 feet from enclosure; 5 feet max.

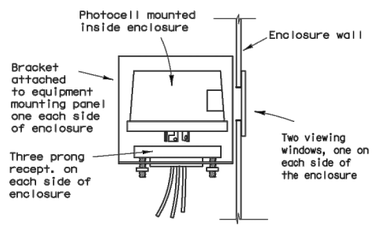

ENCLOSURE MOUNTED PHOTOCELL

For photocell specifications see ED(5),XIII.

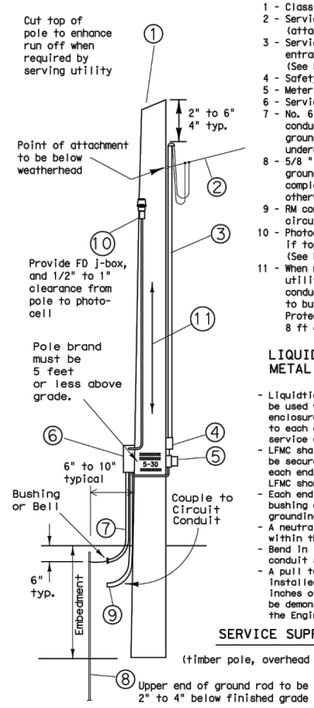

1 - Class 5 pole, height as required
2 - Service drop from utility company (attached below weatherhead)
3 - Service conduit and service entrance conductors(RMC) (See Electrical Service Data)
4 - Safety switch (when required)
5 - Meter (when required)
6 - Service enclosure
7 - No. 6 bare grounding electrode conductor in 1/2 " PVC to ground rod - extend 1/2 " PVC 6" underground.
8 - 5/8 " x 8' Copper clad ground rod - drive ground rod completely underground unless otherwise approved by the Engineer.
9 - RM conduit - same size as branch circuit conduit.
10 - Photocell and conduit - if top mounted. (See Electrical Service Data)
11 - When required by the serving utility provide bare #6 awg copper conductor. Run wire from pole top to butt wrap or copper butt plate. Protect conductor to a height of 8 ft above finish grade.

LIQUIDTIGHT FLEXIBLE METAL CONDUIT (LFMC)

(If applicable)

- Liquidtight flexible metal conduit, may be used when meter and service enclosure are mounted 90 to 180 degrees to each other. Size shall be same as service entrance conduit.
- LFMC shall not exceed 3 ft. and shall be securely supported within one ft. of each end. No strap required for LFMC shorter then 12"
- Each end of LFMC must have a grounding bushing or be terminated with a grounding fitting.
- A neutral conductor must be installed within the LFMC.
- Bend in liquidtight flexible metal conduit shall not exceed 180 degrees.
- A pull test is required on all installed conductors, at least six inches of free conductor movement shall be demonstrated to the satisfaction of the Engineer.

SERVICE SUPPORT TYPE TP (O)

(timber pole, overhead service, typical arrangement)

TIMBER POLE NOTES

1. Conduit and electrical conductors attached to the electrical service pole and underground within 12 inches of service pole shall not be paid for directly but shall be subsidiary to the service pole.
2. Pole top mounted photocell, install on north side of pole or in service enclosure as required. See Electrical Service Data.
3. Attach meter and service equipment with stainless steel or galvanized channel (Unistrut, Kindorf, or equal). Gain pole as required to provide flat surfaces for each strut. Paint ends of galvanized channel with zinc rich paint. Gain depth 5/8" max. Gain height 1 7/8" max. Strut to be 1" max. deep, and 1 5/8" wide max. Secure each strut section to timber pole with two galvanized or SS lag bolts, 1/4" diameter min. by 1 1/2" length min. Place flat cut galvanized or SS washer on each lag bolt. Gain pole in a neat and workmanlike manner.
4. Embedment depth shall be as required in Item 627 Treated Timber Poles.
5. Poles trimmed for excess length shall be trimmed from the top end only.

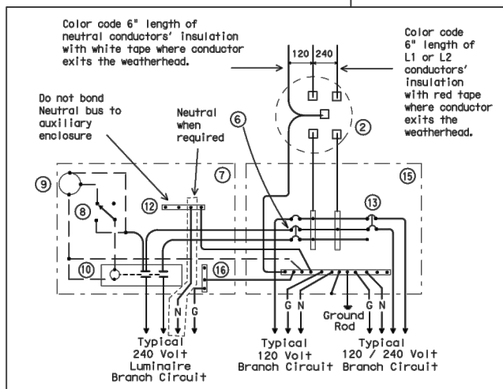

SCHEMATIC TYPE T

120/240 VOLTS - THREE WIRE

Install photocell and lighting contactor when shown on Electrical Service Data.

SCHEMATIC LEGEND

1 - omitted
2 - Meter (when required)
3 - Service Assembly Enclosure
4 - Main Disconnect Breaker (Not Used)
5 - Omit
6 - Circuit Breaker, 15 Amp typical for control circuit wiring
7 - Auxiliary Enclosure
8 - Control Station ("H-O-A" Switch)
9 - Photo Electric Control (enclosure-mounted shown)
10 - Lighting Contactor
11 - Power Distribution Terminal Blocks (Not Used)
12 - Neutral Bus required when 120 v. lights are controlled by lighting contactor
13 - Branch Circuit Breaker (See Electrical Service Data)
14 - Circuit Breaker Panelboard (Not Used)
15 - Load Center
16 - Ground Bus

——— Power Wiring
- - - - Control Wiring
—N— Neutral Conductor (when required-to serve 120 v. loads only)
—G— Equipment grounding conductor-always required

Texas Department of Transportation
Traffic Operations Division

ELECTRICAL DETAILS-
SERVICE SCHEMATICS AND
SUPPORT-TYPE TP (OVERHEAD)

ED(4)-03

©TxDOT April 1998	DN: TXDOT	CK: TXDOT	DW: TXDOT	CK: TXDOT
12-00 REVISIONS 3-03	CONT	SECT	JOB	HIGHWAY
	DIST		COUNTY	SHEET NO.

71D

Edward C. Monaco P.E. 2115 Anchor Drive, Ste #3 San Antonio, Texas 78213 210-541-0200 Firm Registration # F-8297	PROJECT NAME: CITY OF SAN ANTONIO DEPARTMENT OF TRANSPORTATION & CAPITAL IMPROVEMENTS WILSON BLVD. (CLUB-DONALDSON) & THESPIAN ISLAND(40-00322)	DATE: 04-01-2015	DESIGNED BY: ECM	DRAWN BY: ECM/VA	CHECKED BY: ECM	PROJECT START DATE: -	PROJECT NUMBER: 2015	ENGINEER OF RECORD: ECM	REVISIONS: REV. / DESCRIPTION / BY / DATE / APPROV.	ELECTRICAL DETAILS E-10

ADDITIVE ALTERNATE NO. 1, ADDENDUM 2

DISCLAIMER: The use of this standard is governed by the "Texas Engineering Practice Act". No warranty of any kind is made by TxDOT for any purpose whatsoever. TxDOT assumes no responsibility for the conversion of this standard to other formats or for incorrect results or damages resulting from its use.

DATE:
FILE:

SERVICE ENCLOSURE NOTES

VIII. Service Assembly Enclosures. All service assemblies and enclosures shall be UL Listed for the intended purpose.

A. Shop built or shop assembled service assemblies (all types except Type T and Type D without lighting contactor or enclosure mounted photo cell) and all auxiliary equipment enclosures mounted with service equipment and paid for as part of Item 628, "Electrical Services", shall be built or assembled by a UL Listed Industrial Control Panel shop and shall have a unique serial numbered UL Label with the words "LISTED ENCLOSED INDUSTRIAL CONTROL PANEL". The same or an additional label shall have the name, location, and phone number of the shop, the UL file number of the shop, the shop order or drawing number, date of manufacture or assembly, and the line voltage. The service assembly enclosure shall also be labeled "SUITABLE ONLY FOR USE AS SERVICE EQUIPMENT".

B. Conduit entries into the top of enclosures shall have threaded hub. Conduit entries through the equipment mounting back plate will not be allowed.

C. All service enclosure front doors shall be permanently labeled "DANGER HIGH VOLTAGE". Label shall be a self sticking type, intended for outdoor installation. Lettering style, layout and colors of red, black and white shall be as required by OSHA. Label letters shall be 1 to 1 1/2 inches high or as high as the enclosure door width will permit for smaller services. Separate or auxiliary lighting enclosures need not be OSHA labeled when mounted in the same viewing plane as the service enclosure front door. Where only one type of load is served by the service, the service door shall be marked using duo-colored plastic labels or self adhesive vinyl weather resistant labels, minimum of 1 inch high; applied in a neat and workmanlike manner. On the label will be the service number shown on the plans as well as identifying the load served specifically (i.e. lighting, landscaping, signals, traffic management or other wording as directed by the Engineer). Safety switches need not be OSHA labeled unless specifically required by the serving utility.

D. Type GS enclosures will only be allowed for service Types D and T without an enclosure mounted photocell and/or lighting contactor and the Type C panelboard. This spec will allow an "off the shelf" product meeting these specifications to be used. Type GS enclosures shall be made from pre-galvanized steel sheeting, hot dipped galvanized steel, or powder coat painted steel unless shown differently on the plans. Steel enclosures shall be painted inside and outside; galvanized enclosures may be painted. Unless otherwise approved by the Engineer, painted enclosures shall be gray, beige, white or light green. Panelboard/loadcenter enclosures shall meet UL type 3R requirements, shall have a dead front trim, and an outer padlockable door preventing unauthorized persons from operating contained equipment. Galvanized steel is no longer allowed for Types A,C,or custom-built D or T enclosures. If GS is shown in the descriptive code for any of these, an AL shall be provided.

E. Type AL enclosures for service Types A and C shall meet UL type 3R requirements and shall also meet additional requirements of this paragraph. The enclosure shall have both a main disconnect remote operator handle and a door latch handle. Die-cast handles are not acceptable. The main disconnect remote operator shall be flange-mounted, shall interlock the door when in the "on" position, and shall be padlockable in both the "on" or "off" positions. Door latch shall latch at two or more points, operate by a handle separate from disconnect switch and be capable of being locked. Door closure clamps will not be allowed. Lock must be keyed to Master #2195. All the enclosures shall have either a continuous stainless steel piano hinge with stainless steel pin or enclosures less than 30 inches may have two heavy duty hinges, those over 30 inches must have three. Heavy duty two and three point hinges shall have a 0.185 inch minimum diameter electro-zinc plated steel pin or a stainless steel pin. Two point hinged doors shall be rated for 56 lbs of loading. Three point hinged doors shall be rated for 70 lbs of loading. The door shall have an attached data pocket constructed of either thermoplastic or metal. Pocket shall be 12" x 12", unless that size will not fit in enclosure. The pocket shall then be as large as possible, as approved by the Engineer, and mechanically attached with stainless steel nuts and bolts, or stainless steel or aluminum rivets. Enclosure shall include an equipment mounting panel installed inside the enclosure on collar studs or tapped bosses, and constructed of a minimum 12 guage galvanized steel. Equipment mounting panels shall not be painted. Enclosure shall have factory installed external mounting feet. Enclosure door shall be capable of opening at least 130 degrees, with arm or other approved means to hold the door open. Only the enclosure exterior will be primed and painted. Paint color shall be beige or gray and shall be powder coat paint as shown below. Condensation drainage shall be provided in the bottom of the enclosure before leaving the factory. The Contractor shall prepare and submit a schematic drawing unique to an individual service. The approved drawing shall be laminated and placed in the document pocket of the service at the time of shipment to the job site. All applicable wiring diagrams and plan sheet layouts for all equipment and branch breaker circuits supplied by that service shall also be laminated and placed in the document pocket prior to shipping. Type AL enclosures for Type D and T services with enclosure mounted photocell and/or lighting contactor shall have the loadcenter interior mounted in an enclosure with properly adapted dead front trim. Types D and T shall not have a loadcenter exterior "can" mounted inside another enclosure meeting these specifications. (Do not put one enclosure inside another enclosure). Types D and T with enclosure mounted photocell and/or lighting contactor shall meet the additional requirements of this paragraph except that remote-operating handle will not be provided.

F. Type SS enclosures for Type A and C shall meet all the requirements above for their respective type AL. Type SS enclosures for D and T shall meet all the requirements above for their respective type AL. Stainless Steel shall not be painted.

G. PS enclosure shall be as detailed and specified on ED(8). Galvanized steel will not be allowed for any pedestal service. If GS is shown in the descriptive code an AL will be provided.

IX. Powder Coat Paint. Powder coating shall be either a polyester thermosetting resin, a zinc rich primer with a TGIC (triglycidyl isocyanurate) powder overcoating, or a zinc-rich epoxy powder, applied by either electrostatic spray or fluidized bed immersion, high temperature oven cured, high density, low gloss, 4 mil thick (minimum), coating. Adhesion shall meet the 5A or 5B classifications of ASTM D3359. Finish shall be uniform in appearance and free of scratches.

X. Main Disconnect. Main disconnect device shall be a circuit breaker, as specified in the Electrical Service Data, shall be two or three pole, and rated for the voltage and amperage specified. Circuit breaker shall be an UL Listed thermal-magnetic circuit breaker controlled by flange-mounted remote operator in the service assembly enclosure when required. Circuit breakers shall have a minimum interrupting rating of 10,000 Amps. When the utility company provides a transformer larger than 50 KVA, Contractor shall verify that the available fault current is less than the circuit breaker amps interrupting capacity (AIC) rating and shall provide documentation from the Utility to the Engineer. Documentation shall be submitted at the same time as other electrical submittals. Circuit breaker shall be UL Listed to UL489. No backfed breakers will be allowed for use as a main disconnect.

XI. Control Circuit. Control circuit protection shall be 15 amp circuit breaker.

XII. Control Station ("H-O-A" Switch). Control station shall be a maintained-contact, three position selector switch in an UL type enclosure. Switch shall be rated 600 volts and shall be fitted with "Hand-Off-Auto" legend.

XIII. Photo Electric Control. Photo electric control shall consist of a photocell, internal lightning arrester, and relay or bimetallic switch mounted inside a weatherproof enclosure with standard 3-prong twist lock photocell plug and receptacle. The enclosure shall be made of poly-acrylic with clear acrylic window. Enclosure chassis shall be molded thermosetting plastic. The photocell shall have a polyethylene gasket, and shall have a hermetically sealed cadmium sulfide cell. The arrester shall have an enclosed type expulsion arrester rated 2.0 kV sparkover with 5,000 amps follow-through. Relay or switch shall be time delay type with normally closed contacts. Photo electric control shall be rated a minimum of 1800 VA, voltage as required. Enclosure mounted photocells shall be the same as above except that the photocell shall be mounted inside the enclosure. The enclosure shall have two acrylic paned windows, or other material approved by the Engineer, one on each side of the enclosure. Each window shall be rectangular approximately one inch by two inches, round 2 inch diameter, or as otherwise approved by the Engineer. Bracket and photocell's receptacle will be mounted inside enclosure next to each window. Except for window side, 2" of clearance is required on all sides of photocell for ease of replacement. The photocell's receptacle is held in place by two mounting screws on bracket and located next to each window of the enclosure. The 3-prong twist lock photocell shall be mounted in a position to receive light from the window closest to the photocell. The photocell shall be mounted in a position to receive light from one window. Top of pole mounted photocells shall be mounted as shown on ED(4). The Contractor shall be responsible for proper operation of the photo-electric control. The Contractor shall move and/or adjust or shield the photocell from stray or ambient nighttime light or shall make any other adjustments required for proper operation. The photocell shall face North when practicable. Unless otherwise shown on the plans, the photocell shall turn on the illumination system at 1.0 +(-) 0.5 footcandle and turn off the illumination system at two footcandles higher than turn on.

XIV. Lighting Contactor. Lighting contactor shall be a UL Listed NEMA rated lighting contactor, two-pole or multipole as required, electrically held type designed to control high pressure sodium lighting loads, with silver alloy double break contacts rated at 240 volts, 480 volts or 600 volts as required. Lighting contactor shall not be the DIN rail mounted type.

XV. Power Distribution Terminal Blocks. Power distribution terminal blocks shall be rated for 600 volts and shall be used for line side connections to branch circuit breakers where more than one circuit breaker is required. Lugs on blocks shall be properly sized for conductors being used. Only one conductor shall be placed under each lug.

XVI. Neutral/Ground Bus. Neutral/ground bus shall be a factory made bus permanently bonded to the enclosure with properly sized lugs for grounding and neutral conductors.

SCHEMATIC LEGEND

1 - Safety Switch (when required)
2 - Meter (when required)
3 - Service Assembly Enclosure
4 - Main Disconnect Breaker (See Electrical Service Data)
5 - Omit
6 - Circuit Breaker, 15Amp
7 - Auxiliary Enclosure
8 - Control Station ("H-O-A" Switch)
9 - Photo Electric Control (enclosure-mounted shown)
10 - Lighting Contactor
11 - Power Distribution Terminal Blocks
12 - Neutral/Ground Bus
13 - Branch Circuit Breaker (See Electrical Service Data)
14 - Circuit Breaker Panelboard (See Electrical Service Data) (If Type C is shown as AL or SS on descriptive code, this is the service assembly enclosure only. Panelboard enclosure is GS unless otherwise noted.
15 - Load Center

————	Power Wiring
– – – –	Control Wiring
——N——	Neutral Conductor (when required) serve 120 v. loads only)
——G——	Equipment grounding conductor-always required

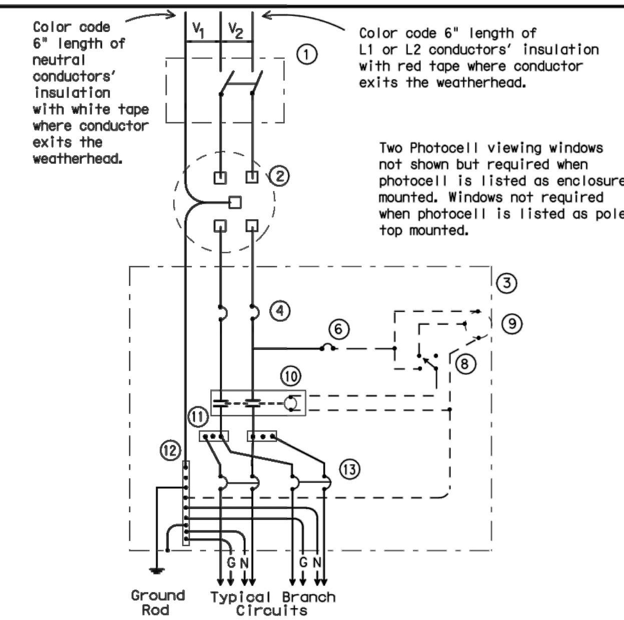

SCHEMATIC TYPE A

THREE WIRE

Maximum feeder circuit size (High Mast Poles): 100 amps for two pole 480V, 125 amps for one or two pole 120V or 240V. Maximum branch circuit size: 50 amps.

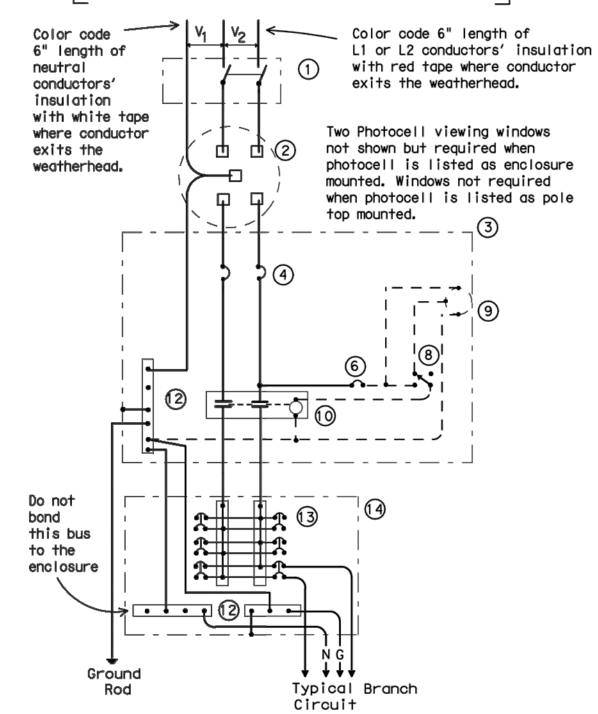

SCHEMATIC TYPE C

THREE WIRE

Maximum feeder circuit size (High Mast Poles): 100 amps for two pole 480V, 125 amps for one or two pole 120V or 240V. Maximum branch circuit size: 50 amps.

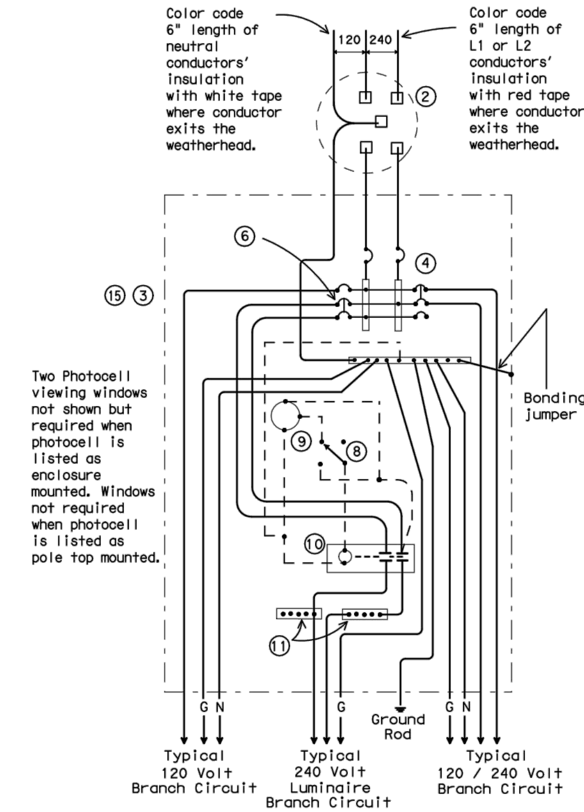

SCHEMATIC TYPE D

120/240 VOLTS - THREE WIRE

Install photocell and lighting contactor when shown on Electrical Service Data. See Type D service notes.

TYPE D SERVICE NOTES

Photocell and lighting contactor shall be located either in the same UL type 3R enclosure with load center or, if approved by Engineer, in separate enclosure. There shall be a window on each side of enclosure to allow operation of photocell. Both photocell contactor and breaker area shall have dead front trim. Enclosure, except for RT and PS supports, shall not exceed 36 inches in height or 16 inches in width unless approved by the Engineer. Ty D load center with lighting controls or TY D separate lighting control enclosure shall have power distribution blocks for a minimum of 4, #8 conductors per phase.

Texas Department of Transportation
Traffic Operations Division

ELECTRICAL DETAILS-
SERVICE ENCLOSURE
& NOTES

ED(5)-03

© TxDOT April 1998	DN: TXDOT	CK: TXDOT	DW: TXDOT	CK: TXDOT
REVISIONS 12-00 3-03	CONT	SECT	JOB	HIGHWAY
	DIST	COUNTY		SHEET NO.

71E

Edward C. Monaco P.E.
2115 Anchor Drive, Ste #3
San Antonio, Texas 78213
210-541-0200
Firm Registration # F-8297

PROJECT NAME:
CITY OF SAN ANTONIO DEPARTMENT OF TRANSPORTATION & CAPITAL IMPROVEMENTS
WILSON BLVD. (CLUB-DONALDSON) & THESPIAN ISLAND(40-00322)

DATE:	04-01-2015	PROJECT START DATE:	-
DESIGNED BY:	ECM	PROJECT NUMBER:	2015
DRAWN BY:	ECM/VA	ENGINEER OF RECORD:	
CHECKED BY:	ECM		ECM

REVISIONS				
REV	DESCRIPTION	BY	DATE	APPROV.

ELECTRICAL DETAILS
E-11

ADDITIVE ALTERNATE NO. 1, ADDENDUM 2

GEOTECHNICAL ENGINEERING STUDY

FOR

WILSON BOULEVARD (CLUB DRIVE TO DONALDSON AVENUE) AND THESPIAN ISLAND SAN ANTONIO, TEXAS

GEOTECHNICAL REPORT

RABA KISTNER CONSULTANTS

Raba Kistner
Consultants, Inc.
12821 W. Golden Lane
San Antonio, TX 78249
P.O. Box 690287
San Antonio, TX 78269
www.rkci.com

P 210 :: 699 :: 9090
F 210 :: 699 :: 6426
TBPE Firm F-3257

Project No. ASA13-100-00
December 4, 2013

Mr. Jeffrey J. Brown, P.E.
Jones & Carter, Inc.
1000 Central Parkway North
San Antonio, Texas 78232

RE: Geotechnical Engineering Study
Wilson Boulevard (Club Drive to Donaldson Avenue)
and Thespian Island
San Antonio, Texas

Dear Mr. Brown:

RABA KISTNER Consultants Inc. (RKCI) is pleased to submit the report of our Geotechnical Engineering Study for the above-referenced project. This study was performed in accordance with RKCI Proposal No. PSA13-039-00 (Revised), dated August 6, 2013. The purpose of this study was to drill borings within the existing roadway alignment, to perform laboratory testing to classify and characterize subsurface conditions, and to prepare an engineering report presenting pavement design recommendations and construction guidelines as well as general retaining wall design recommendations.

The following report contains our design recommendations and considerations based on our current understanding of the project information provided to our office. There may be alternatives for value engineering of the pavement systems, and RKCI recommends that a meeting be held with the Owner and design team to evaluate these alternatives.

We appreciate the opportunity to be of service to you on this project. Should you have any questions about the information presented in this report, or if we may be of additional assistance with value engineering or on the materials testing-quality control program during construction, please call.

Very truly yours,

RABA KISTNER CONSULTANTS, INC.

R. Blake Wright

R. Blake Wright, E.I.T.
Graduate Engineer

Garland L. Burch, P.E.
Senior Geotechnical Consultant

STATE OF TEXAS
GARLAND L. BURCH
38126
LICENSED
PROFESSIONAL ENGINEER
12-4-13

RBW/GLB/dlc

Attachments

Copies Submitted: Above (3)

GEOTECHNICAL ENGINEERING STUDY

For

WILSON BOULEVARD (CLUB DRIVE TO DONALDSON AVENUE)
AND THESPIAN ISLAND
SAN ANTONIO, TEXAS

Prepared for

JONES & CARTER, INC.
San Antonio, Texas

Prepared by

RABA KISTNER CONSULTANTS, INC.
San Antonio, Texas

PROJECT NO. ASA13-100-00

December 4, 2013

RABAKISTNER

TABLE OF CONTENTS

INTRODUCTION **1**

PROJECT DESCRIPTION **1**

LIMITATIONS **1**

BORINGS AND LABORATORY TESTS **1**

FINDINGS AND TEST RESULTS **2**

EXISTING PAVEMENT SECTION 2

SUBSURFACE 3
- Subgrade Strength Characterization 3
- Swell/Heave Potential 4

PAVEMENT RECOMMENDATIONS **5**

CITY OF SAN ANTONIO DESIGN PARAMETERS – HOT MIX ASPHALT PAVEMENTS 5
- Structural Number Recommendations 6

PAVEMENT DESIGN PARAMETERS – HOT MIX ASPHALT PAVEMENTS 6
- Performance Period 6
- Roadbed Soil Resilient Modulus 6
- Serviceability Indices 7
- Overall Standard Deviation 7
- Reliability, % 7
- Design Traffic 18-kip ESAL 7

RECOMMENDED PAVEMENT SECTIONS – HOT MIX ASPHALT PAVEMENTS 7
- Secondary Arterial 8
- Collector/Local Type B 8
- Mechanically Stabilized Layer 9

PAVEMENT CONSTRUCTION CONSIDERATIONS **9**

SITE PREPARATION 9

SELECT FILL 9

ON-SITE CLAY FILL 10

LIME TREATMENT OF SUBGRADE 10

GEOGRID REINFORCEMENT 11

GRANULAR BASE COURSE 11

PRIME COAT 11

TABLE OF CONTENTS

TACK COAT 12

ASPHALTIC CONCRETE SURFACE AND/OR BINDER COURSES 12

MISCELLANEOUS PAVEMENT RELATED CONSIDERATIONS 13
- Drainage Considerations 13
- Utilities 13
- Curb and Gutter 14
- Pavement Maintenance 14
- Construction Traffic 14

RETAINING STRUCTURES 14

LATERAL EARTH PRESSURES 14

BACKFILL COMPACTION 15

DRAINAGE 16

RETAINING WALL FOOTINGS 16

ATTACHMENTS

Boring Location Map
Logs of Borings
Key to Terms and Symbols
Results of Soil Analyses
Moisture Density Relationship Curve
pH-Lime Series Curve

INTRODUCTION

RABA KISTNER Consultants Inc. (RKCI) has completed the authorized subsurface exploration and pavement/foundation design analysis for the proposed improvements to the segment of Wilson Boulevard from Club Drive to Donaldson Avenue and also Thespian Island in San Antonio, Texas. This report briefly describes the procedures utilized during this study and presents our findings along with our recommendations for pavement design and construction guidelines as well as general retaining wall design recommendations.

PROJECT DESCRIPTION

To be considered in this study are improvements to Wilson Boulevard from Club Drive to Donaldson Avenue and also Thespian Island in San Antonio, Texas. The improvements will include some lane reconstruction and curb additions along Wilson Boulevard and the realignment of the intersection of Kampmann Boulevard and Donaldson Avenue (near Thespian Island). The roadway is to be evaluated in accordance with the *City of San Antonio's Design Guidance Manual* regarding Secondary Arterial and also Collector/Local Type B streets. It is also our understanding that low retaining walls may be necessary to accommodate grade changes adjacent to the roadway.

LIMITATIONS

This engineering report has been prepared in accordance with accepted Geotechnical Engineering practices in the region of south/central Texas and for the use of Jones & Carter, Inc. (CLIENT) and its representatives for design purposes. This report may not contain sufficient information for purposes of other parties or other uses. This report is not intended for use in determining construction means and methods.

The recommendations submitted in this report are based on the data obtained from the four borings and one bulk sample collected at this site and the information provided to us. This report may not reflect the actual variations of the subsurface conditions across the site. The nature and extent of variations across the site may not become evident until construction commences. The construction process itself may also alter subsurface conditions. If variations appear evident at the time of construction, it may be necessary to reevaluate our recommendations after performing on-site observations and tests to establish the engineering impact of the variations.

The scope of our Geotechnical Engineering Study does not include an environmental assessment of the air, soil, rock, or water conditions either on or adjacent to the site. No environmental opinions are presented in this report.

BORINGS AND LABORATORY TESTS

Subsurface conditions at the site were evaluated by three borings drilled along the existing Wilson Boulevard alignment and one boring drilled adjacent to Thespian Island. The boring locations are shown on the Boring Location Map, Figure 1. These locations are approximate and distances were measured

using a recreational grade, hand-held, GPS Locator; tape; angles; pacing; etc. The borings were drilled using a truck-mounted drilling rig to maximum depths of 15 ft below the existing ground surface. During drilling operations, 24 split-spoon samples (with standard penetration tests) were collected. In addition to the above samples, a bulk sample of the predominant subgrade soil was also collected for use in California Bearing Ratio (CBR) testing, Lime Series testing for both Plasticity Index (PI) and pH considerations, and unconfined compression testing of lime treated samples. The bulk sample was collected in the vicinity of Borings B-1, B-2, and B-3. Each sample was visually classified in the laboratory by a member of our Geotechnical Engineering staff. The geotechnical engineering properties of the strata were evaluated by the following tests:

Type of Test	Number Conducted
Natural Moisture Content	24
Atterberg Limits	8
Percent Passing a No. 200 Sieve	2

The results of the laboratory tests are presented in graphical or numerical form on the boring logs illustrated on Figures 2 through 5. A key to classification terms and symbols used on the logs is presented on Figure 6. The results of the laboratory and field testing are also tabulated on Figure 7 for ease of reference. The results of the CBR testing can be found on the Moisture Density Relationship Curve, Figure 8. The pH-Lime Series Curve can be found on Figure 9.

Standard penetration test results are noted as “blows per ft” on the boring logs and Figure 8, where “blows per ft” refers to the number of blows by a falling hammer required for 1 ft of penetration into the soil/weak rock. Where hard or dense materials were encountered, the tests were terminated at 50 blows even if one foot of penetration had not been achieved.

Samples will be retained in our laboratory for 30 days after submittal of this report. Other arrangements may be provided at the request of the Client.

FINDINGS AND TEST RESULTS

EXISTING PAVEMENT SECTION

The field measured pavement thicknesses are presented graphically on the Logs of Borings presented on Figures 2 through 5 as well as in the table below.

Boring No.	Asphalt Thickness (in.)	Base Material Thickness (in.)
B-1	3	7
B-2	3	13
B-3	4-1/2	7-1/2
B-4	3	7-1/2

SUBSURFACE

The subsurface stratigraphy at this site can be described by three generalized strata. Each stratum has been designated by grouping soils that possess similar physical and engineering characteristics. The boring logs should be consulted for more specific stratigraphic information. The lines designating the interfaces between strata on the boring logs represent approximate boundaries. Transitions between strata may be gradual.

Fill material consisting of soft to hard, dark brown and tan clay was encountered beneath the base material in Borings B-2 and B-3. This fill material extended to depths of approximately 3 and 6 ft below the existing ground surface in Borings B-2 and B-3, respectively. These clays are classified as plastic to highly plastic with measured plasticity indices ranging from 26 to 46. Measured moisture contents range from 10 to 34 percent. Standard Penetration Test (SPT) N-values range from 2 blows per ft to 50 blows for 10 in. of penetration.

Stratum I consists of stiff to hard, dark brown clay. These clays are classified as highly plastic with measured plasticity indices ranging from 48 to 51. Measured moisture contents range from 28 to 29 percent. SPT N-values range from 9 to 35 blows per ft. This stratum extends to depths of approximately 2 and 5 ft below the existing ground surface in Borings B-4 and B-1, respectively; and was not encountered in Borings B-2 or B-3.

Stratum II consists of very dense, tan, clayey gravel. Measured moisture contents range from 6 to 8 percent. SPT N-values range from 50 blows for 8 in. of penetration to 50 blows for 9 in. of penetration. Based on grain size analyses, the percentage of fines (percent passing a No. 200 sieve) ranges from 19 to 26 percent. This stratum extends to depths of approximately 4 and 7 ft below the existing ground surface in Borings B-2 and B-4, respectively; and was not encountered in Borings B-1 or B-3.

Stratum III consists of stiff to hard, tan and gray clay. These clays are classified as plastic to highly plastic with measured plasticity indices ranging from 33 to 45. Measured moisture contents range from 14 to 24 percent. SPT N-values range from 9 to 30 blows per ft. This stratum extends to at least the termination depth in Borings B-1 through B-4.

Subgrade Strength Characterization

We have assumed the pavement subgrade will consist of recompacted on-site clays. The CBR was measured using *ASTM D 1883 Standard Test Method for CBR (California Bearing Ratio) of Laboratory-Compacted Soils* and was determined to be 5.2 using the soaked sample methodology. Swell was also measured as part of the CBR procedure and was determined to be 0.2 percent. Based on these results and our experience with the soils in this area, we have assumed a design CBR value of 5.0 for use in our pavement section analysis. If clay soils are imported for the purpose of constructing the roadbed then imported materials must be selected that have a CBR value of at least 5.0. If lower quality clay fill

materials are utilized, the pavement sections will have to be increased based on the quality (tested CBR value) of the clays imported.

Swell/Heave Potential

Assuming that the clays extend to depths of 15 ft below the existing ground surface, the estimated Potential Vertical Rise (PVR) for this site ranges from 2-1/2 to 4-1/2 in. These values (ranges) were determined using the empirical procedure, Texas Department of Transportation (TxDOT) Tex-124-E, Method for Determining the Potential Vertical Rise (PVR). A surcharge load of 1 psi, an active zone of 15 ft, and dry moisture conditions were assumed in estimating the above PVR values.

Subgrade soils that are highly expansive when water is introduced (i.e. highly plastic soils) will heave, causing the pavement to become rough or uneven over time. Pavement roughness is generally defined as an expression of irregularities in the pavement surface that adversely affect the ride quality of a vehicle (and thus the user). Roughness is an important pavement characteristic because it affects not only ride quality but also vehicle costs, fuel consumption, and maintenance costs. Pavement heave can be reduced through various measures but cannot be totally eliminated without full removal of the problematic soil. Measures available for reducing heave include:

- Soil Treatment with Lime or Other Chemicals
- Removal and Replacement of High PI Soils
- Drains or Barriers to Collect or Inhibit Moisture Infiltration

Soil treatment with lime (or other chemicals) is typically used to reduce the swelling potential of the upper portion of the pavement subgrade containing moderately plastic soils. Lime and water are mixed with the top 6 to 12 inches (or possibly more) of the subgrade and allowed to mellow or cure for a period of time. After mellowing the soil-lime mixture is compacted to form a strong soil matrix that can improve pavement performance and potentially reduce soil heave. However, in highly plastic soils, lime treatment of only the top portion of the expansive subgrade may not provide an acceptable reduction in PVR. For a more substantial reduction in PVR, removal and replacement of the high PI soil may be the only method available to reduce the potential vertical rise of the pavement to an acceptable level. As stated previously though, it must be recognized that partial removal of expansive clay soil only reduces the potential (or risk) of the damage swell can cause to a pavement and does not completely eliminate this risk.

In addition, capturing water infiltration via French drains, pavement edge drains, or inhibiting water through the use of vertical moisture barriers would reduce the potential for heave since one important component of the heaving mechanism, water, would be reduced. Geocomposite membranes, like geogrids, are also another tool available that may help reduce the damage that heaving subgrades cause to flexible pavements and may be considered in addition to or as an alternative to other mitigation techniques.

It should be noted that the pavement sections derived in the following sections are structurally adequate for the given traffic levels and existing clay subgrade strength, but do not consider the long-

term effects of pavement roughness due to heave, which can only be addressed by the measures discussed in this section.

PAVEMENT RECOMMENDATIONS

CITY OF SAN ANTONIO DESIGN PARAMETERS – HOT MIX ASPHALT PAVEMENTS

To be considered in this study are improvements to Wilson Boulevard from Club Drive to Donaldson Avenue and also the realignment of the intersection of Kampmann Boulevard and Donaldson Avenue (near the Thespian Island). The roadways are to be evaluated in accordance with the *City of San Antonio's Design Guidance Manual* regarding Secondary Arterials and also Collector/Local Type B streets. Based on information provided by the City of San Antonio, we understand that the following design parameters are required for use in the design of flexible pavements for these types of streets.

Street Classification	Equivalent 18-kip Single Axle Load Applications (ESALs)	Reliability	Serviceability Initial/Terminal	Standard Deviation	Structural Number Minimum/Maximum
Secondary Arterial	3,000,000	95	4.2/2.5	0.45	3.80/5.76
Collector/Local Type B	2,000,000	90	4.2/2.5*	0.45	2.92/5.08

*The terminal serviceability indices for collector streets and local streets are 2.5 and 2.0, respectively. A terminal serviceability index of 2.5 has been utilized for this design.

The required structural number is related to the CBR value of the pavement subgrade and the amount of traffic that the pavement will carry over its service life. The CBR provides an estimate of the relative strength of the subgrade and consequently indicates the ability of the pavement section to carry load. This site specific CBR value is utilized in conjunction with the above specified parameters to determine the required Structural Number (SN) for use in the design of the pavement section.

To determine the required design SN value, we utilized a software program entitled "AASHTOWare DARWin 3.1.017, Pavement Design and Analysis System," which is published by the American Association of State Highway and Transportation Officials (AASHTO) and is based on the 1993 edition of the AASHTO "Guide for the Design of Pavement Structures."

The "required by design" SN values presented below are calculated using the DARWin software and are applicable to this specific project. Also shown are the values subsequently determined in the design of the pavement sections for this site.

Structural Number Recommendations

Street Classification	Structural Number			
	Required by Design	*Minimum Value Provided by Design*		
		Flex Base Option	*Full Depth Asphalt Option*	*Mechanically Stabilized Layer Option*
Secondary Arterial	4.39	4.42	4.50	4.62
Collector/Local Type B	3.89	3.92	4.06	3.99

Appendix 10-A of the *City of San Antonio's Design Guidance Manual* states that subgrade soils with a plasticity index (PI) greater than 20 must be treated with lime or other proven methods of treatment to reduce the PI of the soil to less than 20. Based on the results of our Atterberg Limits testing performed in the upper 5 ft of our borings, the PI of the surficial subgrade clays ranges from 26 to 51. Thus, per the City of San Antonio, pavement recommendations at this site will need to include a minimum of 6 in. of lime-treated subgrade.

The average unconfined compressive strength of a remolded sample of subgrade material containing 3% lime was 131 psi. Therefore, the lime-treated subgrade layer will be included as a structural component in the recommended pavement sections.

PAVEMENT DESIGN PARAMETERS – HOT MIX ASPHALT PAVEMENTS

The following input variables are utilized to design flexible base pavements (commonly referred to as Asphaltic Cement Concrete or Asphalt pavements) when using the procedures detailed in the *1993 AASHTO Guide for Design of Pavement Structures*:

- Performance Period
- Roadbed Soil Resilient Modulus psi
- Serviceability Indices
- Overall Standard Deviation
- Reliability, %
- Design Traffic, 18-kip ESALs

Performance Period

The pavement structure was designed for a 20-year performance period which is typical for most flexible pavements.

Roadbed Soil Resilient Modulus

The Resilient Modulus (M_R) is the material property used to characterize the support characteristics of the roadbed soils in flexible pavement design. It is a measure of the soil's deformation response to cyclic

applications of loads much smaller than a failure load. Using conventional correlations, local experience and a design CBR value of 5.0 as discussed above, a Resilient Modulus of 7,500 psi has been used for this project.

To determine the resilient modulus (M_r) of the subgrade, we utilized the correlation equation shown below:

$M_r = 1{,}500 \times CBR$

Serviceability Indices

Initial serviceability is a measure of the pavement's smoothness or rideability immediately after construction. Terminal serviceability is the minimum tolerable serviceability of a pavement. When the serviceability of a pavement reaches its terminal value, rehabilitation is required. See the recommended Initial and Terminal Serviceability Indices on the table presented in the *City of San Antonio Design Parameters – Hot Mix Asphalt Pavements* section of this report.

Overall Standard Deviation

Overall standard deviation accounts for both chance variation in the traffic prediction and normal variation in pavement performance prediction for a given traffic. Higher values represent more variability; thus, the pavement thickness increases with higher overall standard deviations. A value of 0.45 was utilized for the flexible pavement designs presented herein.

Reliability, %

The reliability value represents a "safety factor," with higher reliabilities representing pavement structures with less chance of failure. The AASHTO Guide recommends values ranging from 50 to 99.9%, depending on the functional classification and the location (urban vs. rural) of the roadway. See the recommended Reliability values on the table presented in the *City of San Antonio Design Parameters – Hot Mix Asphalt Pavements* section of this report.

Design Traffic 18-kip ESAL

The 18-kip ESALs were determined from the traffic data specified in the Unified Development Code for the City of San Antonio. See the recommended values on the table presented in the *City of San Antonio Design Parameters – Hot Mix Asphalt Pavements* section of this report.

RECOMMENDED PAVEMENT SECTIONS – HOT MIX ASPHALT PAVEMENTS

Utilizing the design SN values discussed above and minimum layer thicknesses, the optional pavement sections presented in the tables below are recommended.

If clay fill is utilized for fill grading, it should be placed and compacted as discussed in the *On-Site Clay Fill* section of this report.

For this site, the following options for pavement sections are available.

Secondary Arterial

	Layer Description	Layer Thickness	Recommended SN Coeff.	S.N. Extension
Flexible Base Option	Type D Surface Course	2.0 in.	0.44	0.88
	Type C/D Surface Course	2.5 in.	0.44	1.10
	Flexible (Granular) Base	14.0 in.	0.14	1.96
	Lime Treated Subgrade[1]	6.0 in.	0.08	0.48
	Combined Total	**24.5 in.**		**4.42**
Full Depth Asphalt Option	Type D Surface Course	2.0 in.	0.44	0.88
	Type C/D Surface Course	2.5 in.	0.44	1.10
	Type B Base	6.0 in.	0.34	2.04
	Lime Treated Subgrade[1]	6.0 in.	0.08	0.48
	Combined Total	**16.5 in.**		**4.50**
Mechanically Stabilized Layer Option	Type D Surface Course	2.0 in.	0.44	0.88
	Type C/D Surface Course	2.5 in.	0.44	1.10
	Mechanically Stabilized Layer	9.0 in.	0.23	2.07
	Lime Treated Subgrade[1]	6.0 in.	0.08	0.48
	Combined Total	**19.5 in.**		**4.53**

Collector/Local Type B

COLLECTOR/LOCAL TYPE B	Layer Description	Layer Thickness	Recommended SN Coeff.	S.N. Extension
Flexible Base Option	Type D Surface Course	2.0 in.	0.44	0.88
	Type C/D Surface Course	2.0 in.	0.44	0.88
	Flexible (Granular) Base	12.0 in.	0.14	1.68
	Lime Treated Subgrade[1]	6.0 in.	0.08	0.48
	Combined Total	**22.0 in.**		**3.92**
Full Depth Asphalt Option	Type D Surface Course	1.5 in.	0.44	0.66
	Type C/D Surface Course	2.0 in.	0.44	0.88
	Type B Base	6.0 in.	0.34	2.04
	Lime Treated Subgrade[1]	6.0 in.	0.08	0.48
	Combined Total	**15.50 in.**		**4.06**
Mechanically Stabilized Layer Option	Type D Surface Course	2.0 in.	0.44	0.88
	Type C/D Surface Course	2.0 in.	0.44	0.88
	Mechanically Stabilized Layer	7.0 in.	0.25	1.75
	Lime Treated Subgrade[1]	6.0 in.	0.08	0.48
	Combined Total	**17.0 in.**		**3.99**

Mechanically Stabilized Layer

A Mechanically Stabilized Layer (MSL) is a composite layer consisting of flexible (granular) base and a Tensar TriAx product. TriAx geogrid provides lateral restraint to the flexible base by confining aggregate particles within the plane of the geogrid, thereby creating a reinforced, or mechanically stabilized layer. The unique design of the TriAx geogrid allows the thickness of the reinforced layer to be optimized which reduces the thickness of the required flexible base and provides a stronger, more resilient structure. For this particular application, we recommend Tensar TriAx TX-5 geogrid. We do not recommend that an alternative geogrid be utilized in this section as the performance of the final pavement structure may be inferior which will result in premature pavement distress. If an alternate geogrid is to be utilized in these pavement sections, we should be retained to review and revise our recommendations as necessary.

The MSL option prepared herein was prepared using the Tensar International Corporation program SpectraPave 4 PRO Version 1.2.24.

PAVEMENT CONSTRUCTION CONSIDERATIONS

SITE PREPARATION

Preparation for the right-of-way (for streets, sidewalks, utilities, etc.) should be performed in accordance with the 2008 City of San Antonio Standard Specification Item 101 – *Preparing of Right-of-Way*. Exposed subgrades should be thoroughly proofrolled in order to locate and densify any weak, compressible zones. A minimum of 5 passes of a fully-loaded dump truck or a similar heavily-loaded piece of construction equipment should be used for planning purposes. Proofrolling operations should be observed by the Geotechnical Engineer or his representative to document subgrade condition and preparation. Weak or soft areas identified during proofrolling should be removed and replaced with a suitable, compacted backfill.

After completion of the proofrolling operations and just prior to flexible base placement, the exposed subgrade should be moisture conditioned by scarifying to a minimum depth of 6 in. and recompacting to a minimum of 95 percent of the maximum density determined from the Texas Department of Transportation Compaction Test (TxDOT, Tex-114-E). The moisture content of the subgrade should be maintained within the range of optimum moisture content to 3 percentage points above optimum until permanently covered.

SELECT FILL

If utilized beneath pavement sections, select fill preferably should be crushed stone or gravel aggregate. We recommend that materials specified for use as select fill meet the 2008 City of San Antonio Standard Specifications Item 200, *Flexible Base*, Type A, Grade 2.

Soils classified as CH, CL, MH, ML, SM, GM, OH, OL and Pt under the USCS are **not** considered suitable for use as select fill materials at this site. The native soils at this site are **not** considered suitable for use as select fill materials.

Select fill should be placed in loose lifts not exceeding 8 in. in thickness and compacted to at least 100 percent of maximum density as determined by TxDOT, Tex-113-E, Compaction Test. The moisture content of the fill should be maintained within the range of 2 percentage points below to 2 percentage points above the optimum moisture content until final compaction.

If select fill is placed over moisture conditioned clays, the first lift of select fill may be placed at 95 percent of the maximum density as determined by TxDOT, Tex 113-E, Compaction Test.

ON-SITE CLAY FILL

We recommend that the on-site soils be placed to conform to the 2008 City of San Antonio Standard Specifications Item 107 – *Embankment* Type B and should be placed in compacted lifts not exceeding 6 in. in thickness and compacted to the requirements of Table 2 in Item 107 based on the maximum density and optimum moisture content as determined by TxDOT, Tex-114-E. The moisture content of the fill should be maintained to be at least equal to the optimum water content, but not exceed 3 percentage points above the optimum water content until permanently covered. Fill materials shall be free of roots and other organic or degradable material. We recommend that the maximum particle size not exceed 3 in. or one half the compacted lift thickness, whichever is smaller. If other import fill materials are utilized, RKCI should be notified, as additional CBR testing and thicker pavement sections may be required.

It is imperative that the subgrade modulus utilized in the pavement design process be met or exceeded by the fill material. In the event that the clay fill used is different than the existing subgrade, the recommendations in this report could be invalidated and the design engineer must be consulted to determine if additional CBR testing and thicker pavement sections are required.

LIME TREATMENT OF SUBGRADE

Lime treatment of the subgrade soils with PIs greater than 20 should be in accordance with the 2008 City of San Antonio Standard Specification, Item 108 – Lime Treated Subgrade. Lime-treated subgrade soils should be compacted to a minimum of 95 percent of the maximum density at a moisture content within the range of optimum moisture content to 3 percentage points above the optimum moisture content as determined by Tex-113-E. Based on the results of the Lime Series Curve, we recommend that at least 4 percent hydrated lime by weight be used to reduce the PI of the subgrade clays or the minimum required by the City of San Antonio which is 15 pounds/S.Y. for 6 in. of lime treated subgrade. If dry placement of lime is used during construction, an additional 1 percent of lime should be added to account for expected loss.

It is also recommended to perform additional laboratory testing to determine the concentration of soluble sulfates in the subgrade soils, in order to investigate the potential for adverse reaction to lime in certain sulfate-containing soils. The adverse reaction, referred to as sulfate-induced heave, has been known to cause cohesive subgrade soils to swell in short periods of time, resulting in pavement heaving and possible failure.

GEOGRID REINFORCEMENT

The geogrid reinforcement should be Tensar TX-5. An approved source of geogrid is The Tensar Corporation, Morrow, GA or their designated representative. The geogrid component shall be integrally formed and produced from a punched sheet of polypropylene which is then oriented in three substantially equilateral directions so that the resulting ribs shall have a high degree of molecular orientation, which continues at least in part through the mass of the integral node. The resulting geogrid structure shall have apertures that are triangular in shape, and shall have ribs with a depth-to-width ratio greater than 1.0.

The geogrid shall have the nominal characteristics shown in the table below, and shall be certified in writing by the manufacturer to be TX-5:

Properties	Longitudinal	Diagonal	Transverse	General
Rib pitch, mm (in.)	40 (1.60)	40 (1.60)	-	-
Mid-rib depth, mm (in.)	-	1.3 (0.05)	1.2 (0.05)	-
Mid-rib width, mm (in.)	-	0.9 (0.04)	1.2 (0.05)	-
Rib shape	-	-	-	Rectangular
Aperture shape	-	-	-	Triangular

The geogrid should be placed at the bottom of the flexible (granular) base section in all cases where utilized. An alternative to the above geogrid should not be considered without approval from RKCI.

GRANULAR BASE COURSE

The flexible base course should be crushed limestone conforming to the 2008 City of San Antonio Standard Specification, Item 200 – *Flexible Base*, Type A Grade 1. The base course should be placed in lifts with a maximum compacted thickness of 8 in. (10 inches loose) and compacted to a minimum of 95 percent of the maximum density determined by Tex-113-E at a moisture content within the range of 2 percentage points below to 2 percentage points above the optimum moisture content as determined by Tex-113-E.

PRIME COAT

A prime coat should be placed on top of a flexible base course (if used) and should be a MC-30 or AE-P conforming to the 2008 City of San Antonio Standard Specification for Construction Item 202 – *Prime Coat* as well as TxDOT Standard Specifications 2004, Item 300 – *Asphalts, Oils or Emulsions*. Prime coat application rates are typically between 0.1 to 0.3 gal/yd^2 and are generally dependent upon the absorption rate of the granular base and other environmental conditions at the time of placement. City of San Antonio Standard Specification Item 202 – *Prime Coat* states that the application rate shall not exceed 0.2 gal/yd^2.

TACK COAT

A tack coat should be placed between asphaltic concrete base and/or surface lifts and should be a PG binder with a minimum high-temperature grade of PG 58, SS-1H, CSS-1H, or EAP&T conforming to TxDOT Standard Specifications 2004, Item 300 – *Asphalts, Oils or Emulsions*. For construction, City of San Antonio Standard Specification Item 203 – *Tack Coat* shall be specified and the application rate shall not exceed 0.1 gal/yd^2. See additional requirements for tack coats in the appropriate City of San Antonio Standard Specification for Asphaltic Concrete Materials.

ASPHALTIC CONCRETE SURFACE AND/OR BINDER[1] COURSES

The asphaltic concrete surface and/or binder courses should conform to the 2008 City of San Antonio Standard Specification Item 205 – *Hot Mix Asphaltic Concrete Pavement* Types C or D for the surface and binder, and Type B for the base, if the full depth asphalt section is selected for construction. Recycled asphalt pavement (RAP) should be limited to 20 percent of the total weight of the mix for Types C and D mixes and 30 percent for Type B mixes. Higher percentages of RAP may be permissible depending on the material source. If higher percentages of RAP are desired, contact **RKCI** for consideration. Asphalt cement grades should conform to the table shown below, which conforms to the requirements of Item 205.

<table>
<tr><th rowspan="2">Street Classifications</th><th colspan="3">Minimum PG Asphalt Cement Grade</th></tr>
<tr><th>Surface Courses</th><th>Binder & Level Up Courses</th><th>Base Courses</th></tr>
<tr><td>Arterials</td><td>PG 76-22</td><td rowspan="2">PG 70-22</td><td rowspan="4">PG 64-22</td></tr>
<tr><td>Collector and Local Type B Streets</td><td rowspan="2">PG 70-22</td></tr>
<tr><td>Local Type A Street With Bus Traffic</td><td rowspan="2">PG 64-22</td></tr>
<tr><td>Local Type A Street Without Bus Traffic</td><td>PG 64-22</td></tr>
</table>

The asphaltic concrete should be compacted on the roadway to contain from 5 to 9 percent air voids computed using the maximum theoretical specific gravity (Rice) of the mixture determined according to Test Method Tex-227-F. Pavement specimens, which shall be either cores or sections of asphaltic pavement, will be tested according to Test Method Tex-207-F. The nuclear-density gauge or other methods which correlate satisfactorily with results obtained from project roadway specimens may be used when approved by the Engineer. Unless otherwise shown on the plans, the Contractor shall be responsible for obtaining the required roadway specimens at their expense and in a manner and at locations selected by the Engineer.

It is recommended that the hot mix asphalt concrete pavement be placed with a paving machine only and not with a motor grader unless prior approval is granted by the Engineer for special circumstances.

[1] A binder course is defined as the hot mixed asphalt concrete (HMAC) layer placed directly beneath the HMAC surface or wearing course but is not an asphalt treated base layer.

MISCELLANEOUS PAVEMENT RELATED CONSIDERATIONS

Drainage Considerations

As with any soil-supported structure, the satisfactory performance of a pavement system is contingent on the provision of adequate surface and subsurface drainage. Insufficient drainage which allows saturation of the pavement subgrade and/or the supporting granular pavement materials will greatly reduce the performance and service life of the pavement systems.

Surface and subsurface drainage considerations crucial to the performance of pavements at this site include (but are not limited to) the following:

- Any known natural or man-made subsurface seepage at the site which may occur at sufficiently shallow depths as to influence moisture contents within the subgrade should be intercepted by drainage ditches or below grade French drains.
- Final site grading should eliminate isolated depressions adjacent to curbs, which may allow surface water to pond and infiltrate into the underlying soils. Curbs should be installed to a sufficient depth to reduce infiltration of water beneath the curbs and into the pavement base materials.
- Pavement surfaces should be maintained to help minimize surface ponding and to provide rapid sealing of any developing cracks. These measures will help reduce infiltration of surface water downward through the pavement section.

Utilities

Our experience indicates that significant settlement of backfill can occur in utility trenches, particularly when trenches are deep, when backfill materials are placed in thick lifts with insufficient compaction, and when water can access and infiltrate the trench backfill materials. The potential for water to access the backfill is increased where water can infiltrate flexible base materials due to insufficient penetration of curbs, and at sites where geological features can influence water migration into utility trenches (such as fractures within a rock mass or at contacts between rock and clay formations). It is our belief that another factor which can significantly impact settlement is the migration of fines within the backfill into the open voids in the underlying free-draining bedding material.

To reduce the potential for settlement in utility trenches, we recommend that consideration be given to the following:

- All backfill materials should be placed and compacted in controlled lifts appropriate for the type of backfill and the type of compaction equipment being utilized and all backfilling procedures should be tested and documented.
- Consideration should be given to wrapping free-draining bedding gravels with a geotextile fabric (similar to Mirafi 140N) to reduce the infiltration and loss of fines from backfill material into the interstitial voids in bedding materials.

Curb and Gutter

It is good practice to construct curbs such that the depth of the curb extends through the entire depth of the granular base material to act as a protective barrier against the infiltration of water into the granular base. Pavements that do not have this protective barrier to moisture tend to develop longitudinal cracks 1 to 2 ft from the edge of the pavement. Once these cracks develop, further degradation and weakening of the underlying granular base may occur due to water seepage through the cracks.

Pavement Maintenance

Regular pavement maintenance is critical in maintaining pavement performance over a period of several years. All cracks that develop in asphalt pavements should be regularly sealed. Areas of moderate to severe fatigue cracking (also known as alligator cracking) should be sawcut and removed. The underlying base should be checked for contamination or loss of support and any insufficiencies fixed or removed and the entire area patched. All cracks that develop in concrete pavements should be routed and sealed regularly. Joints in concrete pavements should be maintained to reduce the influx of incompressible materials that restrain joint movement and cause spalling and/or cracking. Other typical TxDOT or City of San Antonio maintenance techniques should be followed as required.

Construction Traffic

Construction traffic on prepared subgrade, granular base or asphalt treated base (black base) should be restricted as much as possible until the protective asphalt surface pavement is applied. Significant damage to the underlying layers resulting in weakening may occur if heavily loaded vehicles are allowed to use these areas.

RETAINING STRUCTURES

It is our understanding that retaining walls may be necessary to accommodate grade changes adjacent to the roadway. No specifics regarding the type and geometry of the retaining walls have been provided to us but we anticipate that the walls will have heights such that global stability analyses will not be required. If it is determined that the final retaining walls will require global stability analyses, we should be retained to discuss the type and geometries for our analysis. The following sections provide information for evaluating lateral earth pressures, backfill compaction, drainage issues, and parameters for footing design.

LATERAL EARTH PRESSURES

Equivalent fluid density values for computation of lateral soil pressures acting on retaining walls were evaluated for various types of backfill materials that may be placed behind the retaining walls. These values, as well as corresponding lateral earth pressure coefficients and estimated unit weights, are presented below in preferential order for use as backfill materials.

Back Fill Type	Estimated Total Unit Weight (pcf)	Active Condition		At Rest Condition	
		Earth Pressure Coefficient, k_a	Equivalent Fluid Density (pcf)	Earth Pressure Coefficient, k_o	Equivalent Fluid Density (pcf)
Washed Gravel	135	0.29	40	0.45	60
Crushed Limestone	145	0.24	35	0.38	55
Clean Sand	120	0.33	40	0.5	60
Pit Run Clayey Gravels or Sands	135	0.32	45	0.48	65
Clays	120	0.59	70	0.74	90

The values tabulated above under "Active Conditions" pertain to flexible retaining walls free to tilt outward as a result of lateral earth pressures. For rigid, non-yielding walls the values under "At-Rest Conditions" should be used.

The values presented above assume the surface of the backfill materials to be level. Sloping the surface of the backfill materials will increase the surcharge load acting on the structures. The above values also do not include the effect of surcharge loads such as construction equipment, vehicular loads, or future storage near the structures. Nor do the values account for possible hydrostatic pressures resulting from groundwater seepage entering and ponding within the backfill materials. However, these surcharge loads and groundwater pressures should be considered in designing any structures subjected to lateral earth pressures.

The use of on-site soils as backfill against the proposed retaining structures is not recommended. These soils generally provide higher design active earthen pressures, as indicated above, but may also exert additional active pressures associated with swelling. Controlling the moisture and density of these materials during placement will help reduce the likelihood and magnitude of future active pressures due to swelling, but this is no guarantee.

BACKFILL COMPACTION

Placement and compaction of backfill behind the retaining walls will be critical, particularly at locations where backfill will support adjacent near-grade foundations and/or flatwork. If the backfill is not properly compacted in these areas, the adjacent foundations/flatwork can be subject to settlement.

To reduce potential settlement of adjacent foundations/flatwork, the backfill materials should be placed and compacted as recommended previously in the *Select Fill* section of this report. Each lift or layer of the backfill should be tested during the backfilling operations to document the degree of compaction. Within at least a 5-ft zone of the walls, we recommend that compaction be accomplished using hand-guided compaction equipment capable of achieving the maximum density in a series of 3 to 5 passes.

DRAINAGE

The use of drainage systems is a positive design step toward reducing the possibility of hydrostatic pressure acting against the retaining structures. Drainage may be provided by the use of a drain trench and pipe. The drain pipe should consist of a slotted, heavy duty, corrugated polyethylene pipe and should be installed and bedded according to the manufacturer's recommendations. The drain trench should be filled with gravel (meeting the requirements of ASTM D 448 coarse concrete aggregate Size No. 57 or 67) and extend from the base of the structure to within 2 ft of the top of the structure. The bottom of the drain trench will provide an envelope of gravel around the pipe with minimum dimensions consistent with the pipe manufacturer's recommendations. The gravel should be wrapped with a suitable geotextile fabric (such as Mirafi 140N or equivalent) to help minimize the intrusion of fine-grained soil particles into the drain system. The pipe should be sloped and equipped with clean-out access fittings consistent with state-of-the-practice plumbing procedures.

As an alternative to a full-height gravel drain trench behind the proposed retaining structures, consideration may be given to utilizing a manufactured geosynthetic material for wall drainage. A number of products are available to control hydrostatic pressures acting on earth retaining structures, including Amerdrain (manufactured by American Wick Drain Corp.), Miradrain (manufactured by Mirafi, Inc.), Enkadrain (manufactured by American Enka Company), and Geotech Insulated Drainage Panel (manufactured by Geotech Systems Corp.). The geosynthetics are placed directly against the retaining structures and are hydraulically connected to the gravel envelope located at the base of the structures.

With the exception of basement or subfloor walls, weepholes may be provided along the length of the proposed retaining structures, if desired, in addition to one of the two alternative drainage measures presented above. Based on our experience, weepholes, as the only drainage measure, often become clogged with time and do not provide the required level of drainage from behind retaining structures. We recommend that RKCI review the final retaining structure drainage design before construction.

RETAINING WALL FOOTINGS

The proposed retaining walls may be supported on the native subgrade materials at a minimum depth of 1-1/2 ft below final grade. Footings may be designed using a maximum allowable bearing pressure of 2,000 psf. A coefficient of sliding friction of 0.3 and an adhesion value of 200 psf may be assumed in evaluation of the factor of safety against sliding. If a key is planned beneath the footing, a passive earth pressure coefficient of 1.7 may be assumed in design.

* * * * * * * * * * * * * * * * * * *

The following figures are attached and complete this report:

Figure 1	Boring Location Map
Figures 2 through 5	Logs of Borings
Figure 6	Key to Terms and Symbols
Figure 7	Results of Soil Analyses
Figure 8	Moisture Density Relationship Curve
Figure 9	pH-Lime Series Curve

ATTACHMENTS

RABA KISTNER CONSULTANTS
12821 West Golden Lane
San Antonio, Texas 78249
(210)699-9090 TEL
(210)699-6426 FAX
www.rkci.com
TBPE Firm Number 3257

SOURCE: AERIAL PROVIDED BY COSA (2012)

BORING LOCATION MAP

WILSON BOULEVARD (CLUB DRIVE TO DONALDSON AVENUE)
AND THESPIAN ISLAND
SAN ANTONIO, TEXAS

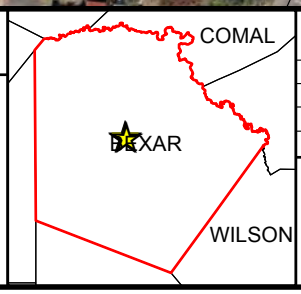

PROJECT No.:	ASA13-100-00
ISSUE DATE:	10/8/2013
DRAWN BY:	MJR
CHECKED BY:	RBW
REVIEWED BY:	GLB

FIGURE 1

NOTE: This Drawing is Provided for Illustration Only, May Not be to Scale and is Not Suitable for Design or Construction Purposes

© 2012 by Raba-Kistner Consultants, Inc.

LOG OF BORING NO. B-1

Wilson Boulevard (Club Drive to Donaldson Avenue)
and Thespian Island
San Antonio, Texas

RABA KISTNER
TBPE Firm Registration No. F-3257

DRILLING METHOD: Straight Flight Auger

LOCATION: N 29.46649; W 98.54021

DEPTH, FT	SYMBOL	SAMPLES	DESCRIPTION OF MATERIAL	BLOWS PER FT	UNIT DRY WEIGHT, pcf	SHEAR STRENGTH, TONS/FT^2 (0.5 1.0 1.5 2.0 2.5 3.0 3.5 4.0) / PLASTIC LIMIT, WATER CONTENT, LIQUID LIMIT (10 20 30 40 50 60 70 80)	PLASTICITY INDEX	% -200
			ASPHALT (3 in.)					
			BASE MATERIAL (7 in.)					
			CLAY, Stiff, Dark Brown	10			48	
				9				
5			CLAY, Blocky, Stiff to Very Stiff, Tan and Gray	9				
				12			33	
				22				
10								
				30				
15			Boring Terminated					
20								
25								
30								
35								

DEPTH DRILLED:	15.0 ft	**DEPTH TO WATER:**	Dry	**PROJ. No.:**	ASA13-100-00
DATE DRILLED:	11/1/2013	**DATE MEASURED:**	11/1/2013	**FIGURE:**	2

NOTE: THESE LOGS SHOULD NOT BE USED SEPARATELY FROM THE PROJECT REPORT

LOG OF BORING NO. B-2

Wilson Boulevard (Club Drive to Donaldson Avenue)
and Thespian Island
San Antonio, Texas

RABA KISTNER
TBPE Firm Registration No. F-3257

DRILLING METHOD: Straight Flight Auger

LOCATION: N 29.46551; W 98.54031

DEPTH, FT	SYMBOL	SAMPLES	DESCRIPTION OF MATERIAL	BLOWS PER FT	UNIT DRY WEIGHT, pcf	SHEAR STRENGTH, TONS/FT^2 (0.5 1.0 1.5 2.0 2.5 3.0 3.5 4.0) / PLASTIC LIMIT, WATER CONTENT, LIQUID LIMIT (10 20 30 40 50 60 70 80)	PLASTICITY INDEX	% -200
			ASPHALT (3 in.)					
			BASE MATERIAL (13 in.)	50/10"			26	
			FILL MATERIAL: CLAY, Hard, Dark Brown and Tan, with gravel	50/8"				19
			GRAVEL (Chert), Clayey, Very Dense, Tan					
5			CLAY, Very Stiff, Tan and Gray, with calcareous deposits and blocky seams	17				
				15			39	
				16				
10								
				21				
15			Boring Terminated					
20								
25								
30								
35								

DEPTH DRILLED:	15.0 ft	**DEPTH TO WATER:**	Dry	**PROJ. No.:**	ASA13-100-00
DATE DRILLED:	11/1/2013	**DATE MEASURED:**	11/1/2013	**FIGURE:**	3

NOTE: THESE LOGS SHOULD NOT BE USED SEPARATELY FROM THE PROJECT REPORT

LOG OF BORING NO. B-3

Wilson Boulevard (Club Drive to Donaldson Avenue)
and Thespian Island
San Antonio, Texas

RABA KISTNER
TBPE Firm Registration No. F-3257

DRILLING METHOD: Straight Flight Auger

LOCATION: N 29.46456; W 98.54045

DEPTH, FT	SYMBOL	SAMPLES	DESCRIPTION OF MATERIAL	BLOWS PER FT	UNIT DRY WEIGHT, pcf	PLASTICITY INDEX	% -200
			ASPHALT (4-1/2 in.)				
			BASE MATERIAL (7-1/2 in.)				
			FILL MATERIAL: CLAY, Soft to Stiff, Dark Brown and Tan	12			
				2		46	
5				9			
			CLAY, Blocky, Very Stiff, Tan and Gray	17			
				18		45	
10							
				21			
15			Boring Terminated				
20							
25							
30							
35							

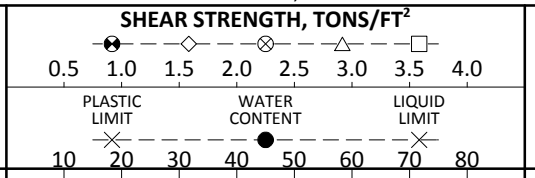

DEPTH DRILLED:	15.0 ft	**DEPTH TO WATER:**	Dry	**PROJ. No.:**	ASA13-100-00
DATE DRILLED:	11/1/2013	**DATE MEASURED:**	11/1/2013	**FIGURE:**	4

NOTE: THESE LOGS SHOULD NOT BE USED SEPARATELY FROM THE PROJECT REPORT

LOG OF BORING NO. B-4

Wilson Boulevard (Club Drive to Donaldson Avenue)
and Thespian Island
San Antonio, Texas

RABA KISTNER
TBPE Firm Registration No. F-3257

DRILLING METHOD: Straight Flight Auger

LOCATION: N 29.46392; W 98.53749

DEPTH, FT	SYMBOL	SAMPLES	DESCRIPTION OF MATERIAL	BLOWS PER FT	UNIT DRY WEIGHT, pcf	SHEAR STRENGTH, TONS/FT^2 (0.5 1.0 1.5 2.0 2.5 3.0 3.5 4.0; PLASTIC LIMIT, WATER CONTENT, LIQUID LIMIT; 10 20 30 40 50 60 70 80)	PLASTICITY INDEX	% -200
			ASPHALT (3 in.)					
			BASE MATERIAL (7 in.)					
			CLAY, Hard, Dark Brown	35			51	
			GRAVEL (Chert), Clayey, Very Dense, Tan	50/9"				
5				50/8"				26
			CLAY, Stiff to Very Stiff, Tan and Gray, with blocky seams	13				
				16			43	
10			-with calcareous deposits above 10 ft					
				21				
15			Boring Terminated					
20								
25								
30								
35								

DEPTH DRILLED:	15.0 ft	**DEPTH TO WATER:**	Dry	**PROJ. No.:**	ASA13-100-00
DATE DRILLED:	11/1/2013	**DATE MEASURED:**	11/1/2013	**FIGURE:**	5

NOTE: THESE LOGS SHOULD NOT BE USED SEPARATELY FROM THE PROJECT REPORT

KEY TO TERMS AND SYMBOLS

MATERIAL TYPES

SOIL TERMS

- CALCAREOUS
- CALICHE
- CLAY
- CLAYEY
- GRAVEL
- GRAVELLY
- PEAT
- SAND
- SANDY
- SILT
- SILTY
- FILL

ROCK TERMS

- CHALK
- CLAYSTONE
- CLAY-SHALE
- CONGLOMERATE
- DOLOMITE
- IGNEOUS
- LIMESTONE
- MARL
- METAMORPHIC
- SANDSTONE
- SHALE
- SILTSTONE

OTHER

- ASPHALT
- BASE
- CONCRETE/CEMENT
- BRICKS / PAVERS
- WASTE
- NO INFORMATION

WELL CONSTRUCTION AND PLUGGING MATERIALS

- BLANK PIPE
- SCREEN
- BENTONITE
- CEMENT GROUT
- BENTONITE & CUTTINGS
- CONCRETE/CEMENT
- CUTTINGS
- GRAVEL
- SAND
- VOLCLAY

SAMPLE TYPES

- AIR ROTARY
- GRAB SAMPLE
- CORE
- GEOPROBE SAMPLER
- ROTOSONIC -DAMAGED
- MUD ROTARY
- NO RECOVERY
- NX CORE
- PITCHER
- ROTOSONIC -INTACT
- SHELBY TUBE
- SPLIT BARREL
- SPLIT SPOON
- TEXAS CONE PENETROMETER
- DISTURBED

STRENGTH TEST TYPES

- POCKET PENETROMETER
- TORVANE
- UNCONFINED COMPRESSION
- TRIAXIAL COMPRESSION UNCONSOLIDATED-UNDRAINED
- TRIAXIAL COMPRESSION CONSOLIDATED-UNDRAINED

NOTE: VALUES SYMBOLIZED ON BORING LOGS REPRESENT SHEAR STRENGTHS UNLESS OTHERWISE NOTED

PROJECT NO. ASA13-100-00

RABAKISTNER

REVISED 04/2012

FIGURE 6a

KEY TO TERMS AND SYMBOLS (CONT'D)

TERMINOLOGY

Terms used in this report to describe soils with regard to their consistency or conditions are in general accordance with the discussion presented in Article 45 of SOILS MECHANICS IN ENGINEERING PRACTICE, Terzaghi and Peck, John Wiley & Sons, Inc., 1967, using the most reliable information available from the field and laboratory investigations. Terms used for describing soils according to their texture or grain size distribution are in accordance with the UNIFIED SOIL CLASSIFICATION SYSTEM, as described in American Society for Testing and Materials D2487-06 and D2488-00, Volume 04.08, Soil and Rock; Dimension Stone; Geosynthetics; 2005.

The depths shown on the boring logs are not exact, and have been estimated to the nearest half-foot. Depth measurements may be presented in a manner that implies greater precision in depth measurement, i.e 6.71 meters. The reader should understand and interpret this information only within the stated half-foot tolerance on depth measurements.

RELATIVE DENSITY

Penetration Resistance Blows per ft	Relative Density
0 - 4	Very Loose
4 - 10	Loose
10 - 30	Medium Dense
30 - 50	Dense
> 50	Very Dense

COHESIVE STRENGTH

Resistance Blows per ft	Consistency	Cohesion TSF
0 - 2	Very Soft	0 - 0.125
2 - 4	Soft	0.125 - 0.25
4 - 8	Firm	0.25 - 0.5
8 - 15	Stiff	0.5 - 1.0
15 - 30	Very Stiff	1.0 - 2.0
> 30	Hard	> 2.0

PLASTICITY

Plasticity Index	Degree of Plasticity
0 - 5	None
5 - 10	Low
10 - 20	Moderate
20 - 40	Plastic
> 40	Highly Plastic

ABBREVIATIONS

B = Benzene
T = Toluene
E = Ethylbenzene
X = Total Xylenes
BTEX = Total BTEX
TPH = Total Petroleum Hydrocarbons
ND = Not Detected
NA = Not Analyzed
NR = Not Recorded/No Recovery
OVA = Organic Vapor Analyzer
ppm = Parts Per Million

Qam, Qas, Qal = Quaternary Alluvium
Qat = Low Terrace Deposits
Qbc = Beaumont Formation
Qt = Fluviatile Terrace Deposits
Qao = Seymour Formation
Qle = Leona Formation
Q-Tu = Uvalde Gravel
Ewi = Wilcox Formation
Emi = Midway Group
Mc = Catahoula Formation
El = Laredo Formation
Kknm = Navarro Group and Marlbrook Marl
Kpg = Pecan Gap Chalk
Kau = Austin Chalk

Kef = Eagle Ford Shale
Kbu = Buda Limestone
Kdr = Del Rio Clay
Kft = Fort Terrett Member
Kgt = Georgetown Formation
Kep = Person Formation
Kek = Kainer Formation
Kes = Escondido Formation
Kew = Walnut Formation
Kgr = Glen Rose Formation
Kgru = Upper Glen Rose Formation
Kgrl = Lower Glen Rose Formation
Kh = Hensell Sand

KEY TO TERMS AND SYMBOLS (CONT'D)

TERMINOLOGY

SOIL STRUCTURE

Slickensided	Having planes of weakness that appear slick and glossy.
Fissured	Containing shrinkage or relief cracks, often filled with fine sand or silt; usually more or less vertical.
Pocket	Inclusion of material of different texture that is smaller than the diameter of the sample.
Parting	Inclusion less than 1/8 inch thick extending through the sample.
Seam	Inclusion 1/8 inch to 3 inches thick extending through the sample.
Layer	Inclusion greater than 3 inches thick extending through the sample.
Laminated	Soil sample composed of alternating partings or seams of different soil type.
Interlayered	Soil sample composed of alternating layers of different soil type.
Intermixed	Soil sample composed of pockets of different soil type and layered or laminated structure is not evident.
Calcareous	Having appreciable quantities of carbonate.
Carbonate	Having more than 50% carbonate content.

SAMPLING METHODS

RELATIVELY UNDISTURBED SAMPLING

Cohesive soil samples are to be collected using three-inch thin-walled tubes in general accordance with the Standard Practice for Thin-Walled Tube Sampling of Soils (ASTM D1587) and granular soil samples are to be collected using two-inch split-barrel samplers in general accordance with the Standard Method for Penetration Test and Split-Barrel Sampling of Soils (ASTM D1586). Cohesive soil samples may be extruded on-site when appropriate handling and storage techniques maintain sample integrity and moisture content.

STANDARD PENETRATION TEST (SPT)

A 2-in.-OD, 1-3/8-in.-ID split spoon sampler is driven 1.5 ft into undisturbed soil with a 140-pound hammer free falling 30 in. After the sampler is seated 6 in. into undisturbed soil, the number of blows required to drive the sampler the last 12 in. is the Standard Penetration Resistance or "N" value, which is recorded as blows per foot as described below.

SPLIT-BARREL SAMPLER DRIVING RECORD

Blows Per Foot	Description
25	25 blows drove sampler 12 inches, after initial 6 inches of seating.
50/7"	50 blows drove sampler 7 inches, after initial 6 inches of seating.
Ref/3"	50 blows drove sampler 3 inches during initial 6-inch seating interval.

NOTE: To avoid damage to sampling tools, driving is limited to 50 blows during or after seating interval.

RESULTS OF SOIL SAMPLE ANALYSES

PROJECT NAME: Wilson Boulevard (Club Drive to Donaldson Avenue) and Thespian Island San Antonio, Texas

FILE NAME: ASA13-100-00.GPJ 12/3/2013

Boring No.	Sample Depth (ft)	Blows per ft	Water Content (%)	Liquid Limit	Plastic Limit	Plasticity Index	USCS	Dry Unit Weight (pcf)	% -200 Sieve	Shear Strength (tsf)	Strength Test
B-1	1.0 to 2.5	10	29	72	24	48	CH				
	2.5 to 4.0	9	28								
	4.5 to 6.0	9	21								
	6.5 to 8.0	12	20	48	15	33	CL				
	8.5 to 10.0	22	15								
	13.5 to 15.0	30	16								
B-2	1.0 to 2.3	50/10"	10	42	16	26	CL				
	2.5 to 3.7	50/8"	8						19		
	4.5 to 6.0	17	14								
	6.5 to 8.0	15	14	53	14	39	CH				
	8.5 to 10.0	16	16								
	13.5 to 15.0	21	17								
B-3	1.0 to 2.5	12	11								
	2.5 to 4.0	2	34	63	17	46	CH				
	4.5 to 6.0	9	18								
	6.5 to 8.0	17	16								
	8.5 to 10.0	18	19	61	16	45	CH				
	13.5 to 15.0	21	20								
B-4	1.0 to 2.5	35	29	73	22	51	CH				
	2.5 to 3.8	50/9"	6								
	4.5 to 5.7	50/8"	8						26		
	6.5 to 8.0	13	19								
	8.5 to 10.0	16	24	60	17	43	CH				
	13.5 to 15.0	21	21								

PP = Pocket Penetrometer TV = Torvane UC = Unconfined Compression FV = Field Vane UU = Unconsolidated Undrained Triaxial

CU = Consolidated Undrained Triaxial

PROJECT NO. ASA13-100-00

MOISTURE DENSITY RELATIONSHIP CURVE

Wilson Boulevard (Club Drive to Donaldson Avenue) and Thespian Island

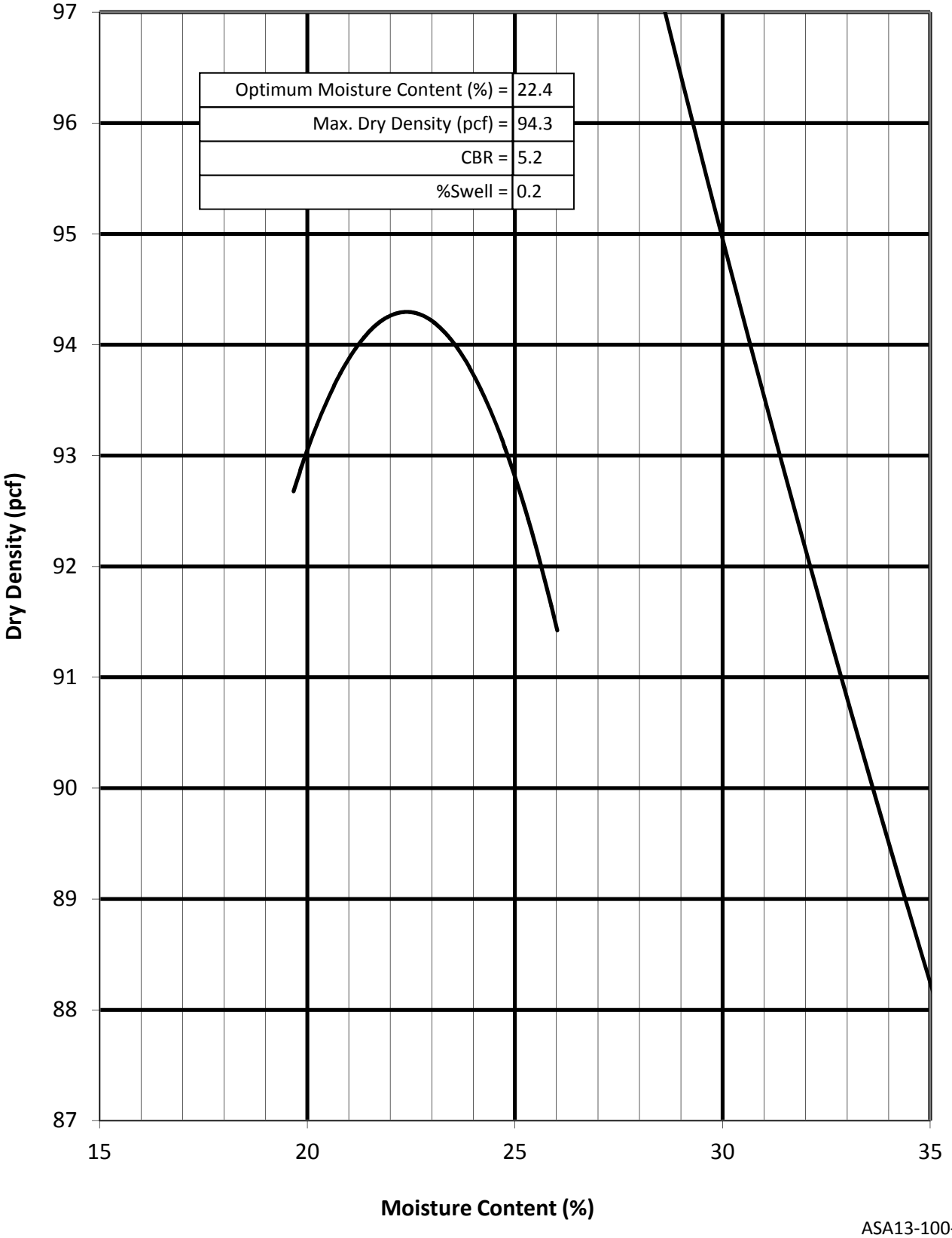

12/3/2013

Raba Kistner

ASA13-100-00

Figure 8

pH-LIME SERIES CURVE

Wilson Boulevard (Club Drive to Donaldson Avenue) and Thespian Island

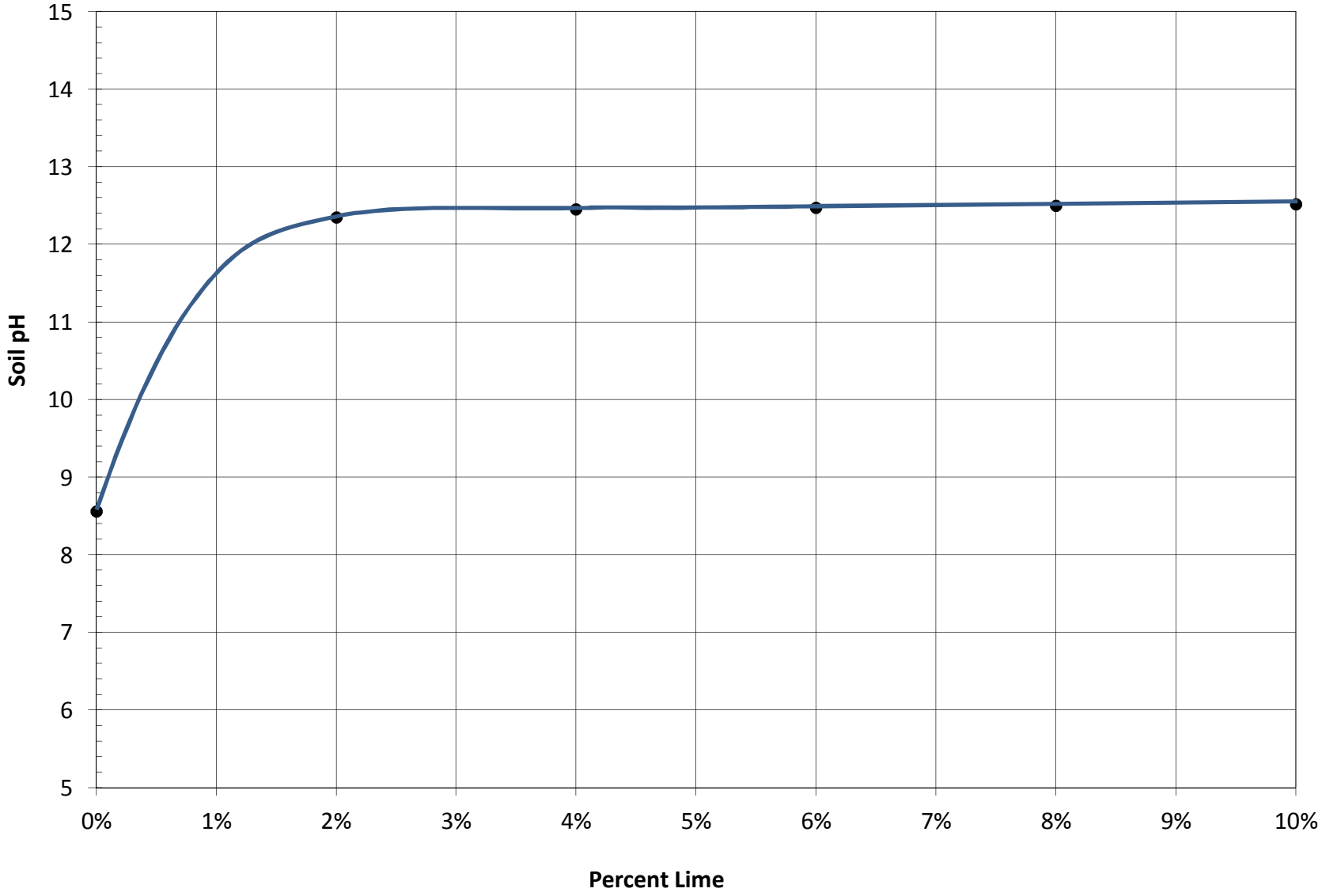

12/3/2013

Raba Kistner

ASA13-100-00
Figure 9

Important Information About Your

Geotechnical Engineering Report

Subsurface problems are a principal cause of construction delays, cost overruns, claims, and disputes.

The following information is provided to help you manage your risks.

Geotechnical Services Are Performed for Specific Purposes, Persons, and Projects

Geotechnical engineers structure their services to meet the specific needs of their clients. A geotechnical engineering study conducted for a civil engineer may not fulfill the needs of a construction contractor or even another civil engineer. Because each geotechnical engineering study is unique, each geotechnical engineering report is unique, prepared *solely* for the client. No one except you should rely on your geotechnical engineering report without first conferring with the geotechnical engineer who prepared it. *And no one — not even you* — should apply the report for any purpose or project except the one originally contemplated.

Read the Full Report

Serious problems have occurred because those relying on a geotechnical engineering report did not read it all. Do not rely on an executive summary. Do not read selected elements only.

A Geotechnical Engineering Report Is Based on A Unique Set of Project-Specific Factors

Geotechnical engineers consider a number of unique, project-specific factors when establishing the scope of a study. Typical factors include: the client's goals, objectives, and risk management preferences; the general nature of the structure involved, its size, and configuration; the location of the structure on the site; and other planned or existing site improvements, such as access roads, parking lots, and underground utilities. Unless the geotechnical engineer who conducted the study specifically indicates otherwise, do not rely on a geotechnical engineering report that was:

- not prepared for you,
- not prepared for your project,
- not prepared for the specific site explored, or
- completed before important project changes were made.

Typical changes that can erode the reliability of an existing geotechnical engineering report include those that affect:

- the function of the proposed structure, as when it's changed from a parking garage to an office building, or from a light industrial plant to a refrigerated warehouse,
- elevation, configuration, location, orientation, or weight of the proposed structure,
- composition of the design team, or
- project ownership.

As a general rule, *always* inform your geotechnical engineer of project changes—even minor ones—and request an assessment of their impact. *Geotechnical engineers cannot accept responsibility or liability for problems that occur because their reports do not consider developments of which they were not informed.*

Subsurface Conditions Can Change

A geotechnical engineering report is based on conditions that existed at the time the study was performed. *Do not rely on a geotechnical engineering report* whose adequacy may have been affected by: the passage of time; by man-made events, such as construction on or adjacent to the site; or by natural events, such as floods, earthquakes, or groundwater fluctuations. *Always* contact the geotechnical engineer before applying the report to determine if it is still reliable. A minor amount of additional testing or analysis could prevent major problems.

Most Geotechnical Findings Are Professional Opinions

Site exploration identifies subsurface conditions only at those points where subsurface tests are conducted or samples are taken. Geotechnical engineers review field and laboratory data and then apply their professional judgment to render an opinion about subsurface conditions throughout the site. Actual subsurface conditions may differ—sometimes significantly—from those indicated in your report. Retaining the geotechnical engineer who developed your report to provide construction observation is the most effective method of managing the risks associated with unanticipated conditions.

A Report's Recommendations Are *Not* Final

Do not overrely on the construction recommendations included in your report. *Those recommendations are not final,* because geotechnical engineers develop them principally from judgment and opinion. Geotechnical engineers can finalize their recommendations only by observing actual

subsurface conditions revealed during construction. *The geotechnical engineer who developed your report cannot assume responsibility or liability for the report's recommendations if that engineer does not perform construction observation.*

A Geotechnical Engineering Report Is Subject to Misinterpretation

Other design team members' misinterpretation of geotechnical engineering reports has resulted in costly problems. Lower that risk by having your geotechnical engineer confer with appropriate members of the design team after submitting the report. Also retain your geotechnical engineer to review pertinent elements of the design team's plans and specifications. Contractors can also misinterpret a geotechnical engineering report. Reduce that risk by having your geotechnical engineer participate in prebid and preconstruction conferences, and by providing construction observation.

Do Not Redraw the Engineer's Logs

Geotechnical engineers prepare final boring and testing logs based upon their interpretation of field logs and laboratory data. To prevent errors or omissions, the logs included in a geotechnical engineering report should *never* be redrawn for inclusion in architectural or other design drawings. Only photographic or electronic reproduction is acceptable, *but recognize that separating logs from the report can elevate risk.*

Give Contractors a Complete Report and Guidance

Some owners and design professionals mistakenly believe they can make contractors liable for unanticipated subsurface conditions by limiting what they provide for bid preparation. To help prevent costly problems, give contractors the complete geotechnical engineering report, *but* preface it with a clearly written letter of transmittal. In that letter, advise contractors that the report was not prepared for purposes of bid development and that the report's accuracy is limited; encourage them to confer with the geotechnical engineer who prepared the report (a modest fee may be required) and/or to conduct additional study to obtain the specific types of information they need or prefer. A prebid conference can also be valuable. *Be sure contractors have sufficient time* to perform additional study. Only then might you be in a position to give contractors the best information available to you, while requiring them to at least share some of the financial responsibilities stemming from unanticipated conditions.

Read Responsibility Provisions Closely

Some clients, design professionals, and contractors do not recognize that geotechnical engineering is far less exact than other engineering disciplines. This lack of understanding has created unrealistic expectations that have led to disappointments, claims, and disputes. To help reduce the risk of such outcomes, geotechnical engineers commonly include a variety of explanatory provisions in their reports. Sometimes labeled "limitations" many of these provisions indicate where geotechnical engineers' responsibilities begin and end, to help others recognize their own responsibilities and risks. *Read these provisions closely.* Ask questions. Your geotechnical engineer should respond fully and frankly.

Geoenvironmental Concerns Are Not Covered

The equipment, techniques, and personnel used to perform a *geoenvironmental* study differ significantly from those used to perform a *geotechnical* study. For that reason, a geotechnical engineering report does not usually relate any geoenvironmental findings, conclusions, or recommendations; e.g., about the likelihood of encountering underground storage tanks or regulated contaminants. *Unanticipated environmental problems have led to numerous project failures.* If you have not yet obtained your own geoenvironmental information, ask your geotechnical consultant for risk management guidance. *Do not rely on an environmental report prepared for someone else.*

Obtain Professional Assistance To Deal with Mold

Diverse strategies can be applied during building design, construction, operation, and maintenance to prevent significant amounts of mold from growing on indoor surfaces. To be effective, all such strategies should be devised for the *express purpose* of mold prevention, integrated into a comprehensive plan, and executed with diligent oversight by a professional mold prevention consultant. Because just a small amount of water or moisture can lead to the development of severe mold infestations, a number of mold prevention strategies focus on keeping building surfaces dry. While groundwater, water infiltration, and similar issues may have been addressed as part of the geotechnical engineering study whose findings are conveyed in this report, the geotechnical engineer in charge of this project is not a mold prevention consultant; ***none of the services performed in connection with the geotechnical engineer's study were designed or conducted for the purpose of mold prevention. Proper implementation of the recommendations conveyed in this report will not of itself be sufficient to prevent mold from growing in or on the structure involved.***

Rely, on Your ASFE-Member Geotechncial Engineer for Additional Assistance

Membership in ASFE/The Best People on Earth exposes geotechnical engineers to a wide array of risk management techniques that can be of genuine benefit for everyone involved with a construction project. Confer with you ASFE-member geotechnical engineer for more information.

ASFE
The Best People on Earth

8811 Colesville Road/Suite G106, Silver Spring, MD 20910
Telephone: 301/565-2733 Facsimile: 301/589-2017
e-mail: info@asfe.org www.asfe.org

Copyright 2004 by ASFE, Inc. Duplication, reproduction, or copying of this document, in whole or in part, by any means whatsoever, is strictly prohibited, except with ASFE's specific written permission. Excerpting, quoting, or otherwise extracting wording from this document is permitted only with the express written permission of ASFE, and only for purposes of scholarly research or book review. Only members of ASFE may use this document as a complement to or as an element of a geotechnical engineering report. Any other firm, individual, or other entity that so uses this document without being an ASFE member could be commiting negligent or intentional (fraudulent) misrepresentation.

IIGER06045.0M

CONSULTANTS • ENVIRONMENTAL • FACILITIES • INFRASTRUCTURE

San Antonio, TX

Austin, TX	Dallas, TX	McAllen, TX
Brownsville, TX	El Paso, TX	Mexico
Corpus Christi, TX	Houston, TX	Salt Lake City, UT

RABAKISTNER

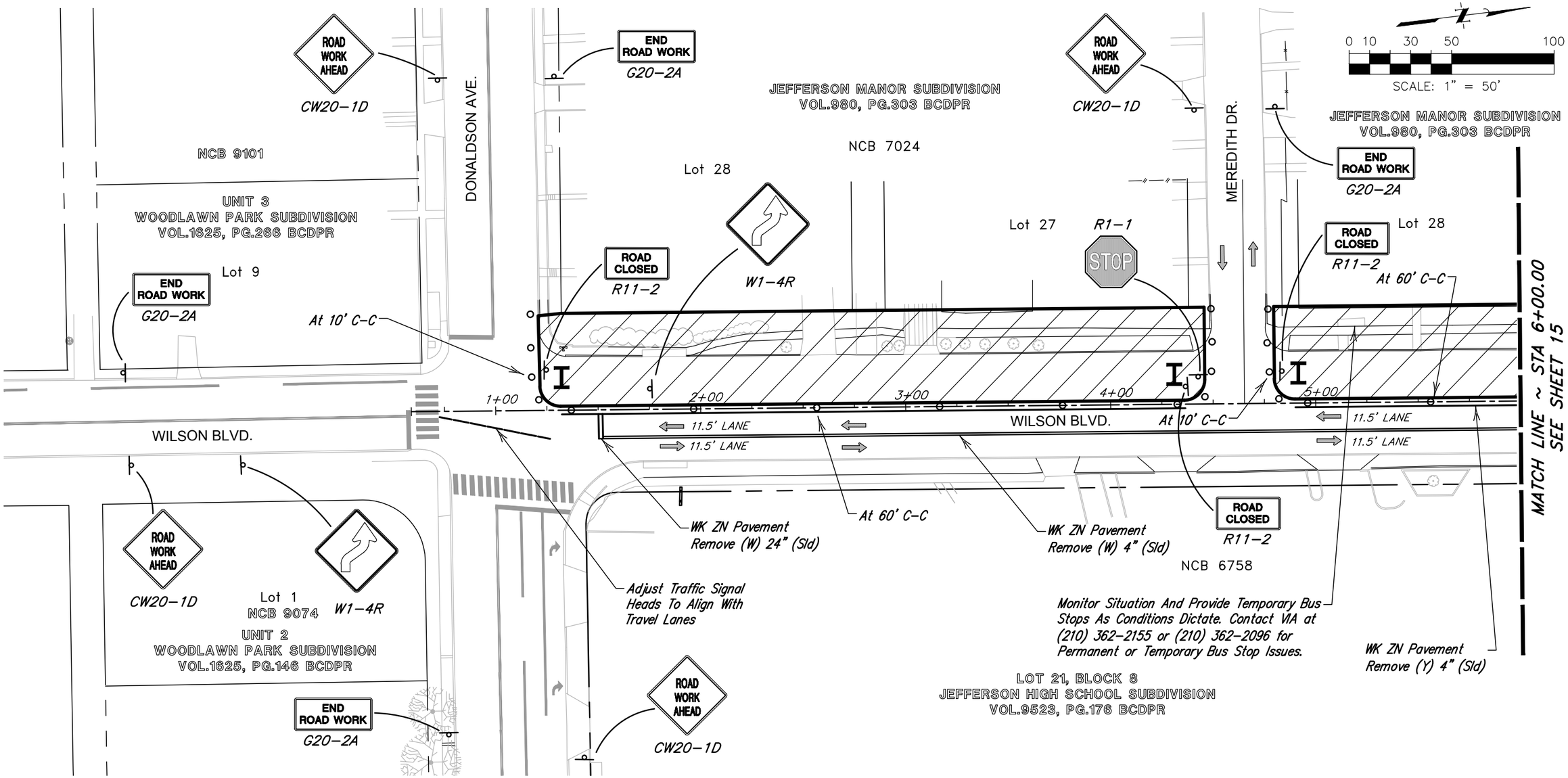

WILSON BLVD TRAFFIC CONTROL PLAN PHASE I

LEGEND:

- SIGN
- CHANNELIZING DEVICES TYPS, BARRELS, CONES, ETC.
- BARRICADES TYPE III
- LIMITS OF EARTHWORK DURING THIS PHASE
- DIRECTION OF TRAVEL

S0010-0081-01

JONES & CARTER, INC.
ENGINEERS • PLANNERS • SURVEYORS
Texas Board of Professional Engineers Registration No. F-439
1000 CENTRAL PARKWAY NORTH SUITE 100 – SAN ANTONIO, TEXAS 78232
PHONE: (210) 494-5511 FAX: (210) 494-5519 www.jonescarter.com

STATE OF TEXAS
CHARLES GRADY KOEHL
83945
4-13-15

CITY OF SAN ANTONIO
TRANSPORTATION & CAPITAL IMPROVEMENTS

WILSON BLVD. (CLUB-DONALDSON) & THESPIAN ISLAND (40-00322)

TRAFFIC CONTROL PLAN
PHASE I (1 OF 2)

100 % SUBMITTAL	PROJECT NO. 40-00322		DATE: 03/03/2015
DRWN BY:	DSGN BY:	CHKD BY:	SHT NO. 14 OF 90

© 2015 Jones & Carter, Inc.
P:\PROJECTS\s0010 city of san antonio\0081-01 wilson blvd\Civil\Const Dwgs\PWP\S0010-081-01_Prop_TCP_Phase_1.dwg KS: April 13, 2015

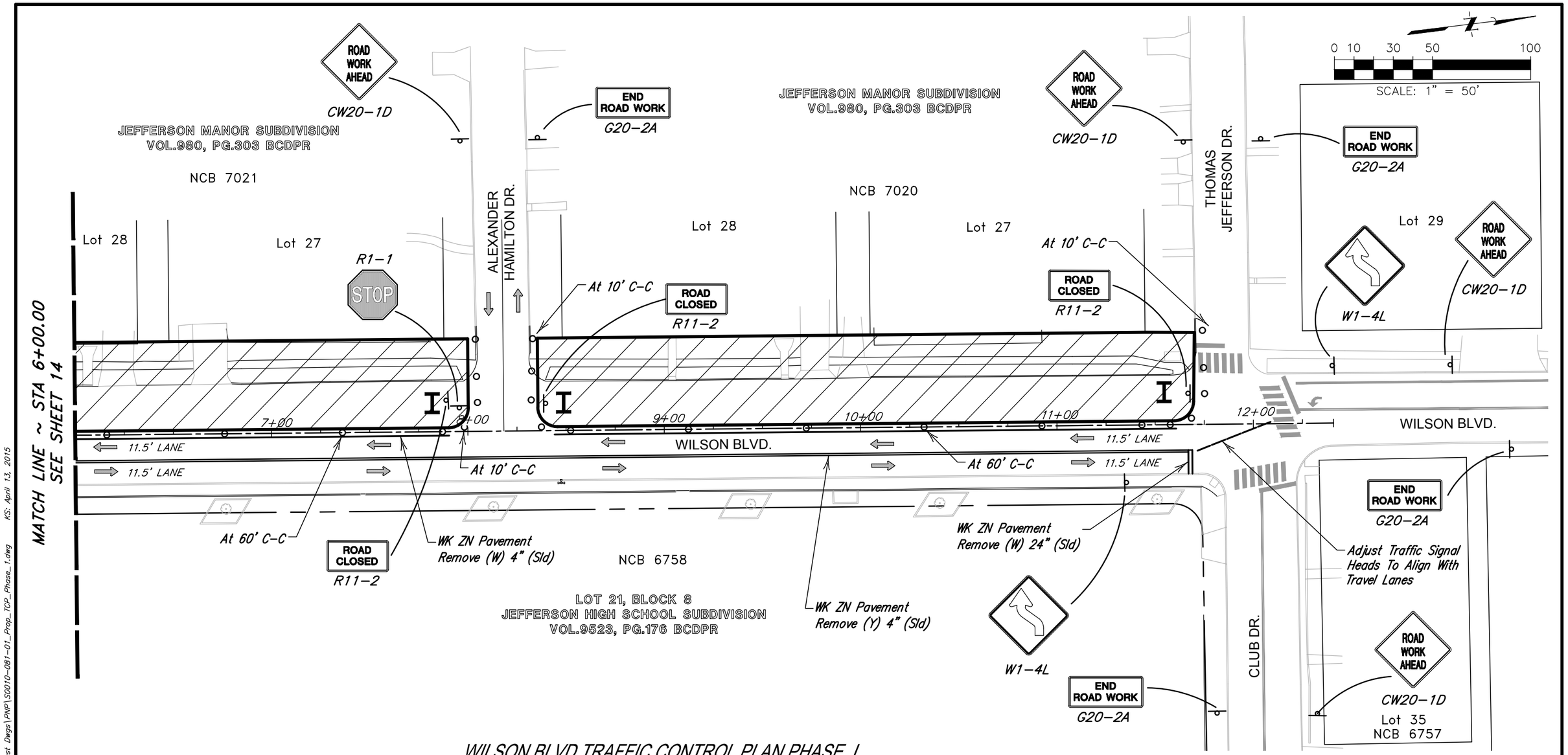

WILSON BLVD TRAFFIC CONTROL PLAN PHASE I

LEGEND:

- SIGN
- CHANNELIZING DEVICES TYPS, BARRELS, CONES, ETC.
- BARRICADES TYPE III
- LIMITS OF EARTHWORK DURING THIS PHASE
- DIRECTION OF TRAVEL

S0010-0081-01

STATE OF TEXAS
CHARLES GRADY KOEHL
83945
4-13-15

JONES & CARTER, INC.
ENGINEERS • PLANNERS • SURVEYORS
Texas Board of Professional Engineers Registration No. F-439
1000 CENTRAL PARKWAY NORTH SUITE 100 – SAN ANTONIO, TEXAS 78232
PHONE: (210) 494-5511 FAX: (210) 494-5519 www.jonescarter.com

CITY OF SAN ANTONIO
TRANSPORTATION & CAPITAL IMPROVEMENTS

WILSON BLVD. (CLUB-DONALDSON) & THESPIAN ISLAND (40-00322)

TRAFFIC CONTROL PLAN
PHASE I (2 OF 2)

100 % SUBMITTAL	PROJECT NO. 40-00322		DATE: 03/03/2015
DRWN BY:	DSGN BY:	CHKD BY:	SHT NO. 15 OF 90

© 2015 Jones & Carter, Inc.
P:\PROJECTS\s0010 city of san antonio\0081-01 wilson blvd\Civil\Const Dwgs\PWP\S0010-081-01_Prop_TCP_Phase_1.dwg KS: April 13, 2015

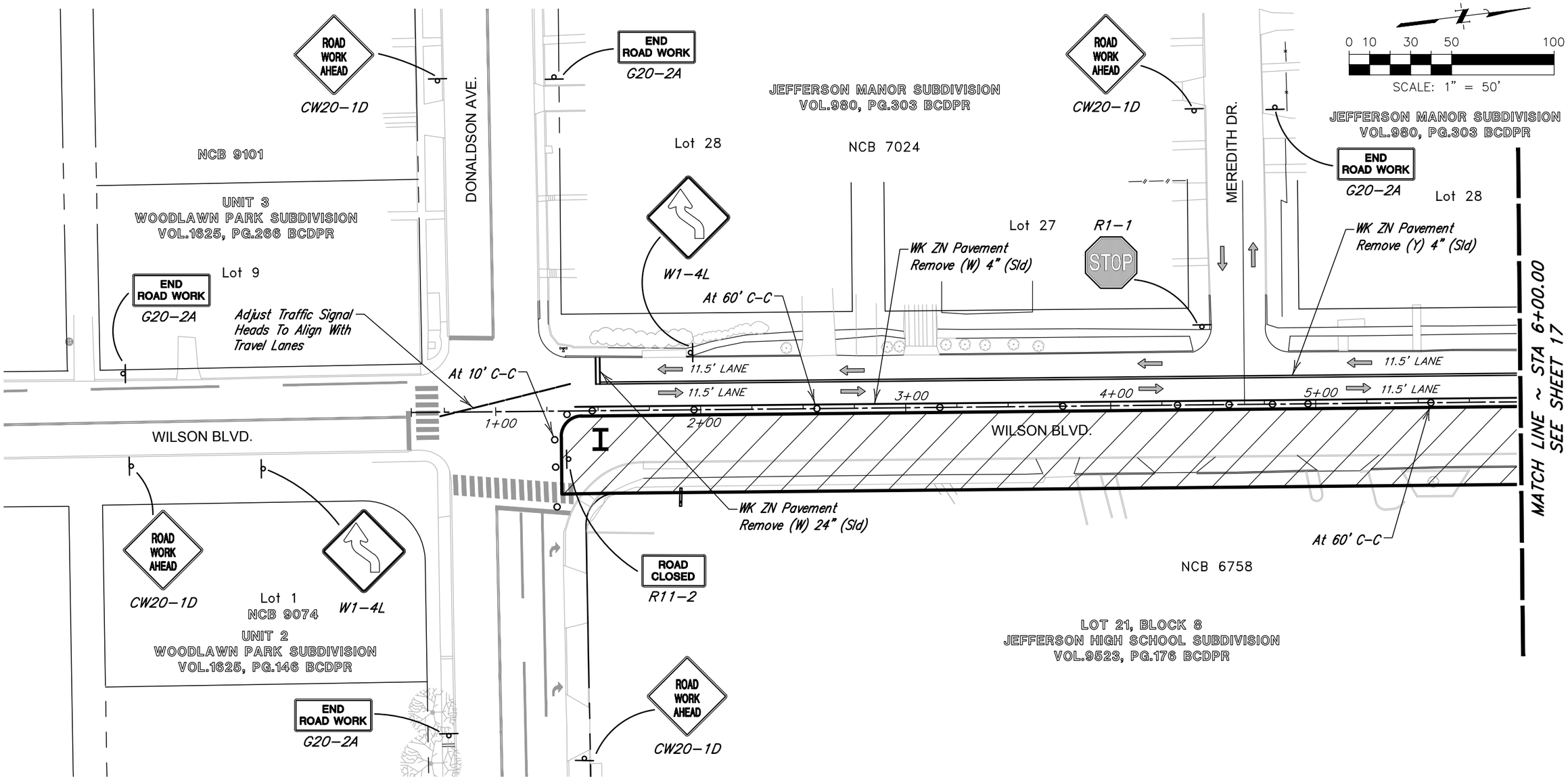

WILSON BLVD TRAFFIC CONTROL PLAN PHASE II

LEGEND:

- SIGN
- CHANNELIZING DEVICES TYPS, BARRELS, CONES, ETC.
- BARRICADES TYPE III
- LIMITS OF EARTHWORK DURING THIS PHASE
- DIRECTION OF TRAVEL

S0010-0081-01

JONES & CARTER, INC.
ENGINEERS • PLANNERS • SURVEYORS
Texas Board of Professional Engineers Registration No. F-439
1000 CENTRAL PARKWAY NORTH SUITE 100 – SAN ANTONIO, TEXAS 78232
PHONE: (210) 494-5511 FAX: (210) 494-5519 www.jonescarter.com

STATE OF TEXAS
CHARLES GRADY KOEHL
83945
4-13-15

CITY OF SAN ANTONIO
TRANSPORTATION & CAPITAL IMPROVEMENTS

WILSON BLVD. (CLUB-DONALDSON) & THESPIAN ISLAND (40-00322)

TRAFFIC CONTROL PLAN
PHASE II (1 OF 2)

100 % SUBMITTAL	PROJECT NO. 40-00322		DATE: 03/03/2015
DRWN BY:	DSGN BY:	CHKD BY:	SHT NO. 16 OF 90

© 2015 Jones & Carter, Inc.
P:\PROJECTS\s0010 city of san antonio\0081-01 wilson blvd\Civil\Const Dwgs\PNP\S0010-081-01_Prop_TCP_Phase_2.dwg KS: April 13, 2015

RESPONSE TO QUESTION C.2, ADDENDUM 2

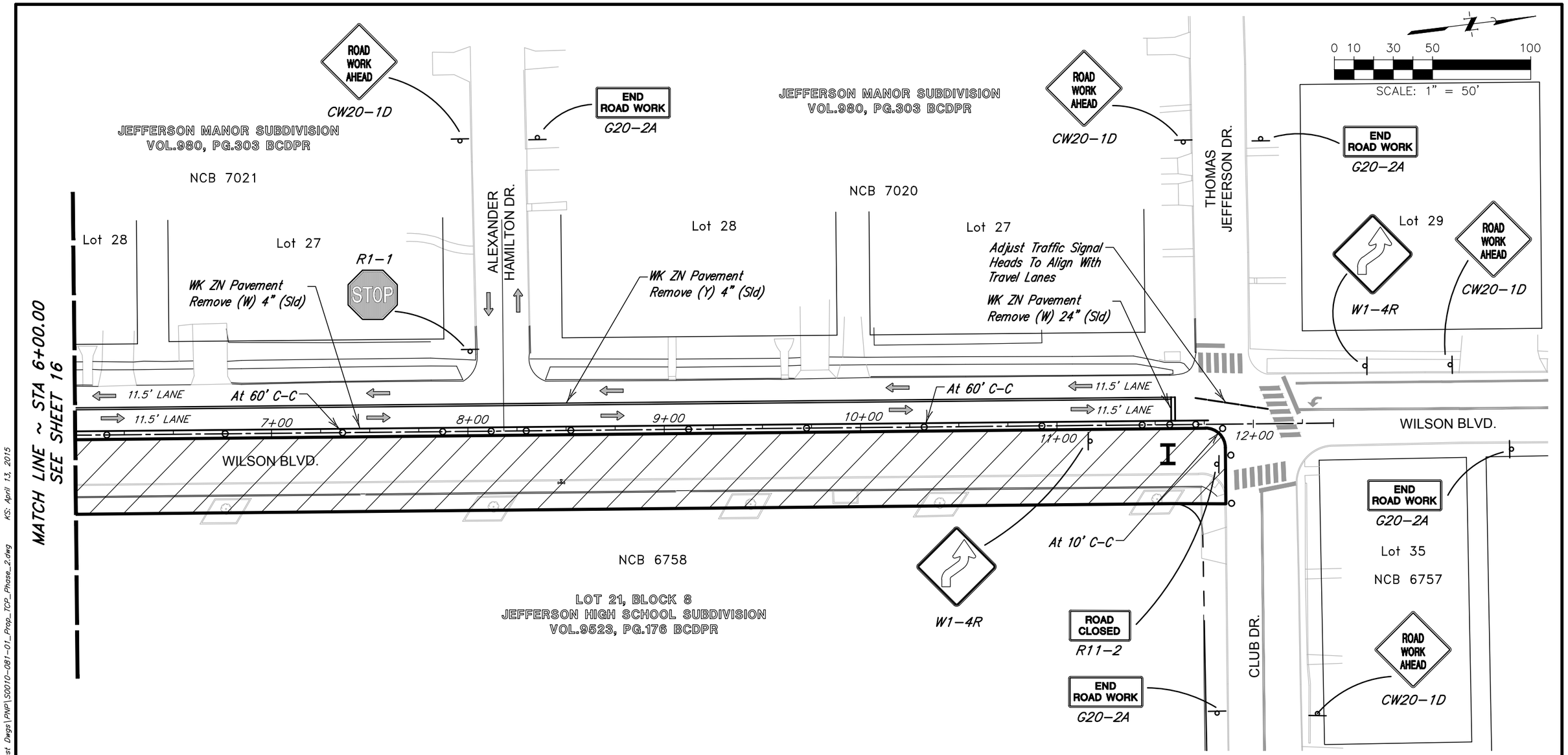

WILSON BLVD TRAFFIC CONTROL PLAN PHASE II

LEGEND:

- SIGN
- CHANNELIZING DEVICES TYPS, BARRELS, CONES, ETC.
- BARRICADES TYPE III
- LIMITS OF EARTHWORK DURING THIS PHASE
- DIRECTION OF TRAVEL

STATE OF TEXAS
CHARLES GRADY KOEHL
83945
4-13-15

S0010-0081-01

JONES & CARTER, INC.
ENGINEERS • PLANNERS • SURVEYORS
Texas Board of Professional Engineers Registration No. F-439
1000 CENTRAL PARKWAY NORTH SUITE 100 – SAN ANTONIO, TEXAS 78232
PHONE: (210) 494-5511 FAX: (210) 494-5519 www.jonescarter.com

CITY OF SAN ANTONIO
TRANSPORTATION & CAPITAL IMPROVEMENTS

WILSON BLVD. (CLUB-DONALDSON) & THESPIAN ISLAND (40-00322)

TRAFFIC CONTROL PLAN
PHASE II (2 OF 2)

100 % SUBMITTAL	PROJECT NO. 40-00322		DATE: 03/03/2015
DRWN BY:	DSGN BY:	CHKD BY:	SHT NO. 17 OF 90

© 2015 Jones & Carter, Inc.
P:\PROJECTS\s0010 city of san antonio\0081-01 wilson blvd\Civil\Const Dwgs\PNP\S0010-081-01_Prop_TCP_Phase_2.dwg KS: April 13, 2015

RESPONSE TO QUESTION C.2, ADDENDUM 2

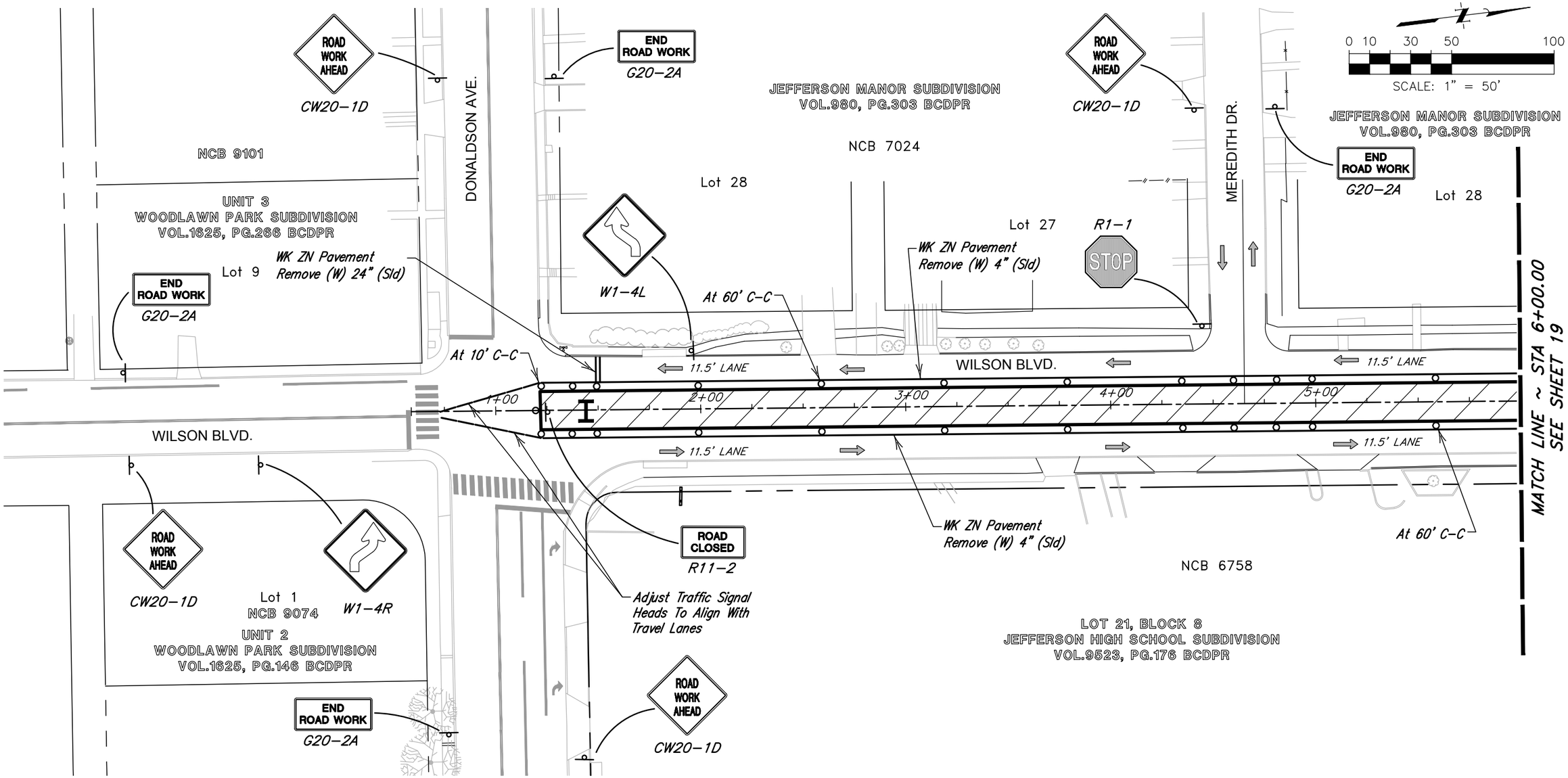

LEGEND:

- SIGN
- CHANNELIZING DEVICES TYPS, BARRELS, CONES, ETC.
- BARRICADES TYPE III
- LIMITS OF EARTHWORK DURING THIS PHASE
- DIRECTION OF TRAVEL

WILSON BLVD TRAFFIC CONTROL PLAN PHASE III

S0010-0081-01

JONES & CARTER, INC.
ENGINEERS • PLANNERS • SURVEYORS
Texas Board of Professional Engineers Registration No. F-439
1000 CENTRAL PARKWAY NORTH SUITE 100 – SAN ANTONIO, TEXAS 78232
PHONE: (210) 494-5511 FAX: (210) 494-5519 www.jonescarter.com

CITY OF SAN ANTONIO
TRANSPORTATION & CAPITAL IMPROVEMENTS

WILSON BLVD. (CLUB-DONALDSON) & THESPIAN ISLAND (40-00322)

TRAFFIC CONTROL PLAN
PHASE III (1 OF 2)

STATE OF TEXAS
CHARLES GRADY KOEHL
83945
4-13-15

100 % SUBMITTAL	PROJECT NO. 40-00322		DATE: 03/03/2015
DRWN BY:	DSGN BY:	CHKD BY:	SHT NO. 18 OF 90

© 2015 Jones & Carter, Inc.
P:\PROJECTS\s0010 city of san antonio\0081-01 wilson blvd\Civil\Const Dwgs\PWP\S0010-081-01_Prop_TCP_Phase_3.dwg KS: April 13, 2015

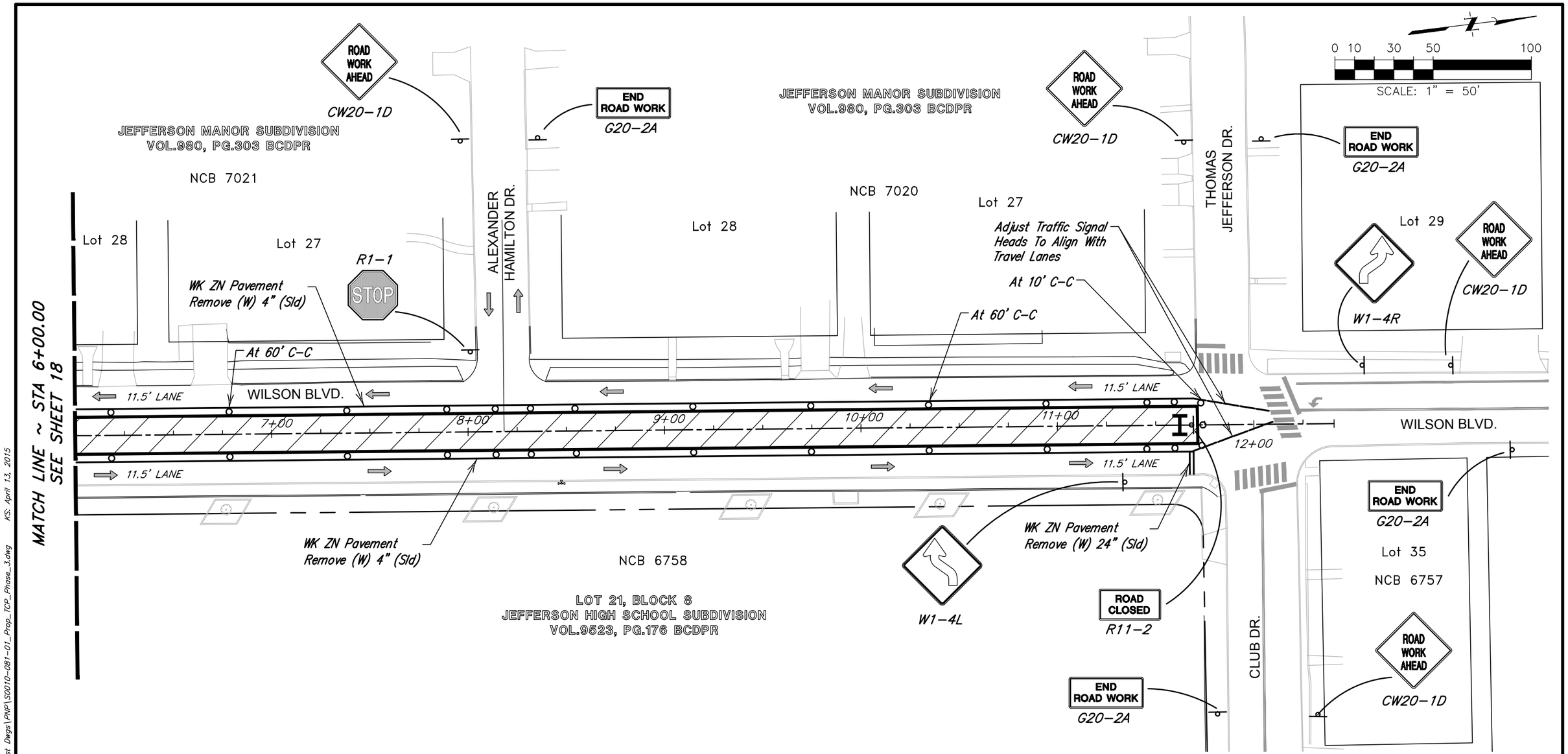

WILSON BLVD TRAFFIC CONTROL PLAN PHASE III

LEGEND:

- SIGN
- CHANNELIZING DEVICES TYPS, BARRELS, CONES, ETC.
- BARRICADES TYPE III
- LIMITS OF EARTHWORK DURING THIS PHASE
- DIRECTION OF TRAVEL

S0010-0081-01

JONES & CARTER, INC.
ENGINEERS • PLANNERS • SURVEYORS
Texas Board of Professional Engineers Registration No. F-439
1000 CENTRAL PARKWAY NORTH SUITE 100 – SAN ANTONIO, TEXAS 78232
PHONE: (210) 494-5511 FAX: (210) 494-5519 www.jonescarter.com

STATE OF TEXAS
CHARLES GRADY KOEHL
83945
4-13-15

CITY OF SAN ANTONIO
TRANSPORTATION & CAPITAL IMPROVEMENTS

WILSON BLVD. (CLUB-DONALDSON) & THESPIAN ISLAND (40-00322)

TRAFFIC CONTROL PLAN
PHASE III (2 OF 2)

100 % SUBMITTAL	PROJECT NO. 40-00322		DATE: 03/03/2015
DRWN BY:	DSGN BY:	CHKD BY:	SHT NO. 19 OF 90

© 2015 Jones & Carter, Inc.
P:\PROJECTS\s0010 city of san antonio\0081-01 wilson blvd\Civil\Const Dwgs\PWP\S0010-081-01_Prop_TCP_Phase_3.dwg KS: April 13, 2015

RESPONSE TO QUESTION C.2., ADDENDUM 2

PLAN SHEET NO.	ITEM NO. / STATION / LOCATION	100.1 MOBILIZATION	100.2 INSURANCE AND BOND	101.1 PREPARING RIGHT OF WAY	102.1 OBLITERATING ABANDONED STREET	103.1 REMOVE CONCRETE CURB	103.3 REMOVE CONCRETE SIDEWALKS AND DRIVEWAYS	103.4 REMOVE MISCELLANEOUS CONCRETE	104.1 STREET EXCAVATION	108.1 LIME TREATED SUBGRADE (6" COMP.)	200.1 FLEXIBLE BASE (12" COMPACTED DEPTH)	202.1 PRIME COAT	203.1 TACK COAT	205.4 HOT MIX ASPH. PVMT TYPE D (1.5" COMP.)	205.4 HOT MIX ASPH. PVMT TYPE D (2.5" COMP.)	208.1 SALVAGING, HAULING & STOCKPILING RECLAIMABLE ASPHALTIC PAVEMENT (1.5")	500.1 MACHINE LAID CURB	502.1 CONCRETE SIDEWALKS	503.1 PORTLAND CEMENT CONCRETE DRIVEWAY	506.1 CONCRETE RETAINING WALLS - COMBINATION TYPE	512.3 VALVE BOX ADJUSTMENTS	515.1 TOPSOIL	516.1 BERMUDA SODDING	520.1 HYDROMULCHING
		LS	LS	LS	SY	LF	SF	SF	CY	SY	SY	GAL	GAL	SY	SY	SY	LF	SY	SY	CY	EA	CY	SY	SY
BASE BID																								
	WILSON BLVD.																							
24	Pavement Overlay				691				583	1311	1311	138	602	6023	691	5332								
26	0+58.85 TO 3+00.00					188	1414	35									501	84	75	1.5		56	302	33
27	3+00.00 TO 5+00.00					191	1116										607	85	20	0		101	343	264
28	5+00.00 TO 7+00.00					200	1835										600	89	116	0		94	285	278
29	7+00.00 TO 9+00.00					191	764										607	85	0	0		108	382	263
30	9+00.00 TO 11+00.00					200	1420										603	89	70	0		85	331	180
31	11+00.00 TO 12+40.82					81	324	9									193	36	0	0.5		28	162	3
53	S.W.P.P.P. PLAN																							
83	Existing Conditions - 1 of 6																							
84	Existing Conditions - 2 of 6																							
86	Existing Conditions - 4 of 6																							
88	Existing Conditions - 6 of 6																							
	THESPIAN ISLAND																							
32	Sheet 1				567								16	160		160	397					95	567	
33	Sheet 2				1288	282	1000						47	465		1288	621	178				204	1221	
	STRIPING AND SIGNAGE																							
70	Striping & Signage - 1 of 2																							
71	Striping & Signage - 2 of 2																							
72	Striping & Signage - 1 of 2																							
73	Striping & Signage - 2 of 2																							
	TOTAL	***1***	***1***	***1***	***2546***	***1333***	***7873***	***44***	***583***	***1311***	***1311***	***138***	***665***	***6648***	***691***	***6780***	***4129***	***646***	***281***	***2***	***0***	***770***	***3593***	***1021***

PLAN SHEET NO.	ITEM NO. / STATION / LOCATION	530.1 BARRICADES, SIGNS & TRAFFIC HANDLING	531.03 R1-1 STOP (HIGH DENSITY)	531.06 R2-1 SPEED LIMIT (HIGH DENSITY)	531.18 R5-1 DO NOT ENTER	531.2 R6-2 ONE WAY	531.34 S1-1 ADVANCE SCHOOL CROSSING & SCHOOL CROSSING	531.35 W16-7 DIAGONAL ARROW SIGN	531.36 S4-1 1/20 MPH SCHOOL SIGN	531.51 W11-2 PED. CROSSING	531.57 9 INCH STREET NAME, BLOCK NUMBERS	531.59 SPECIAL SIGN VIA BUS STOP	531.69 R3-17A AHEAD	531.75 D11-1 BIKE ROUTE	535.01 4" WIDE YELLOW LINE	535.02 4" WIDE WHITE LINE	535.07 24" WIDE WHITE LINE	535.09 LEFT WHITE ARROW	535.12 WORD "ONLY"	535.17 BICYCLE RIDER SYMBOL	540.06 CONSTRUCTION EXIT (INSTALL/ REMOVE)	540.10 CURB INLET GRAVEL FILTERS	553.00 SWPPP	801.2 LEVEL IIA PROTECTIVE FENCE TREE TRUNK PROTECTION	826 VALVE BOX ADJUSTMENTS (SAWS)	834.3 RELOCATE FIRE HYDRANT	851 ADJUSTING EXISTING MANHOLES (SAWS)
		LS	EA	EA	EA	EA	EA	EA	EA	EA	EA	EA	EA	EA	LF	LF	LF	EA	EA	EA	SY	LF	LS	LF	EA	EA	EA
BASE BID																											
	WILSON BLVD.																										
24	Pavement Overlay																										
26	0+58.85 TO 3+00.00																							200		1	2
27	3+00.00 TO 5+00.00																										
28	5+00.00 TO 7+00.00																										
29	7+00.00 TO 9+00.00																										
30	9+00.00 TO 11+00.00																										
31	11+00.00 TO 12+40.82																										
53	S.W.P.P.P. PLAN																				60	50					
83	Existing Conditions - 1 of 6																										
84	Existing Conditions - 2 of 6																								1		
86	Existing Conditions - 4 of 6																								2		
88	Existing Conditions - 6 of 6																								3		
	THESPIAN ISLAND																										
32	Sheet 1																										
33	Sheet 2																										1
	STRIPING AND SIGNAGE																										
70	Striping & Signage - 1 of 2		1			4	1	1	1	3	2	1	1	1		940	565	2	1	6							
71	Striping & Signage - 2 of 2		1	1		1	2	2	1	2	2	1				1154	391	2	1	8							
72	Striping & Signage - 1 of 2		1		1											84	10			1							
73	Striping & Signage - 2 of 2									1					488	445	42			3							
	TOTAL	***1***	***3***	***1***	***1***	***5***	***3***	***3***	***2***	***6***	***4***	***2***	***1***	***1***	***488***	***2623***	***1008***	***4***	***2***	***18***	***60***	***50***	***1***	***200***	***6***	***1***	***3***

STATE OF TEXAS
CHARLES GRADY KOEHL
83945
4-13-15

S0010-0081-01

JONES & CARTER, INC.
ENGINEERS • PLANNERS • SURVEYORS
Texas Board of Professional Engineers Registration No. F-439
1000 CENTRAL PARKWAY NORTH SUITE 100 – SAN ANTONIO, TEXAS 78232
PHONE: (210) 494-5511 FAX: (210) 494-5519 www.jonescarter.com

CITY OF SAN ANTONIO
TRANSPORTATION & CAPITAL IMPROVEMENTS

WILSON BLVD. (CLUB-DONALDSON) & THESPIAN ISLAND (40-00322)

SUMMARY OF QUANTITIES

100 % SUBMITTAL	PROJECT NO. 40-00322	DATE: 03/03/2015
DRWN BY: KS/JS	DSGN BY: CGK / CHKD BY: CGK	SHT NO. 10 OF 90

© 2015 Jones & Carter, Inc.
P:\PROJECTS\s0010 city of san antonio\0081-01 wilson blvd\Civil\Const Dwgs\General\S0010-0081_Quantities.dwg KS: April 13, 2015

WILSON (CLUB-DONALDSON) &

THESPIAN ISLAND (40-00322)

IN

SAN ANTONIO, TEXAS

Prepared for

CAPITAL IMPROVEMENTS MANAGEMENT SERVICE (CIMS)

CITY OF SAN ANTONIO

March 2, 2015

Job #010-081-00

CITY OF SAN ANTONIO TEXAS
GOVERNING SPECIFICATIONS AND SPECIAL PROVISIONS

For Construction of

WILSON (CLUB – DONALDSON) & THESPIAN ISLAND (40-00322)

All standard specifications and special specifications applicable to this project are identified as follows:

STANDARD SPECIFICATIONS FOR PUBLIC WORKS CONSTRUCTION, DATED JUNE 2008
(including latest revisions and additions thereof)

STANDARD SPECIFICATIONS DATED JUNE 2008

Item No.	100	Mobilization
Item No.	101	Preparing Right-of-Way
Item No.	103	Remove Concrete
Item No.	104	Street Excavation
Item No.	107	Embankment
Item No.	108	Lime Treated Subgrade
Item No.	200	Flexible Base
Item No.	202	Prime Coat
Item No.	203	Tack Coat
Item No.	205	Hot Mix Asphaltic Concrete Pavement
Item No.	208	Salvaging, Hauling & Stockpiling Reclaimable Asphaltic Pavement
Item No.	209	Concrete Pavement
Item No.	300	Concrete
Item No.	301	Reinforcing Steel
Item No.	303	Welded Wire Flat Sheets
Item No.	307	Concrete Structures
Item No.	500	Concrete Curb, Gutter, and Concrete Curb and Gutter
Item No.	502	Concrete Sidewalks
Item No.	503	Asphaltic Concrete, Portland Cement Concrete, and Gravel Driveways
Item No.	504	Concrete Medians and Islands
Item No.	506	Concrete Retaining Wall-Combination Type
Item No.	512	Adjusting Existing Manhole and Valve Boxes
Item No.	515	Topsoil
Item No.	516	Sodding
Item No.	525	Concrete Traffic Barriers (Portable)

STANDARD SPECIFICATIONS DATED JUNE 2008 (CONTINUED)

Item No.	530	Barricades, Signs, and Traffic Handling
Item No.	531	Signs
Item No.	533	Cleaning and Removal of Pavement Markings and Markers
Item No.	535	Hot Applied Thermoplastic Pavement Markings
Item No.	540	Temporary Erosion, Sedimentation and Water Pollution Prevention and Control
Item No.	1000	Web Portal

SPECIAL SPECIFICATIONS

Item No.	801	Tree Protection and Landscape Protection
Item No.	804	New Tree & Shrub Planting and Maintenance
Item No.	8615	Radar Advance Detection Devices
Item No.	833	SAWS Standard Specification, Meter and Meter Box Installation
Item No.	851	SAWS Standard Specification, Adjusting Existing Manholes
Item No.	855	SAWS Standard Specification, Reconstruction of Existing Manholes

ITEM 801

TREE AND LANDSCAPE PROTECTION

This item shall govern the placing of protection for trees and other landscape plant material or natural areas to be protected during construction. No site preparation work shall begin in areas where tree preservation and treatment measures have not been completed and approved. *Where removal of trees is indicated on the drawings, they shall be marked as directed by the engineer or designated representatives.* This item shall also govern the excavation, filling, *trenching and boring* around trees described on the plans, and for furnishing all materials, water, labor, tools, equipment and supplies required as specified by this item or as indicated on the plans.

Reference Standards: City of San Antonio Tree Preservation ordinance # 85262

MATERIALS:

LEVEL I FENCE PROTECTION (Detail 1.1.2):

Fabric: Fabric (4 foot height or 1.2 m) shall consist of orange plastic fencing as shown on the plans and shall be woven with 2-inch (50 mm) mesh openings such that in a vertical dimension of 23 inches (584 mm) along the diagonals of the openings there shall be at least seven meshes.

1. Installation Posts: Installation posts shall be a minimum of *72* inches (1.5 m) long and steel "T" shaped with a minimum weight of 1.3 pounds per linear foot (6.3 kg per meter).
2. Tie Wire: Wire for attaching the fabric to the t-posts shall be not less than No. 12 gauge galvanized wire. Sufficient fastening material shall be furnished to provide for the securing of the fabric to the "T" line posts.
3. Used Materials: Previously-used materials, meeting the above requirements and when approved by the Engineer, may be used.

LEVEL IIA FENCE PROTECTION (Detail 1.1.3):

Materials same as Level I -OR-

LEVEL IIB FENCE PROTECTION (Detail 1.1.4):

1. Sleeve: 2x4 lumber to a height of 4 feet above the root crown.
2. 2x4 shall be utilized as called for on plan.
3. Tie Wire: Wire for securing the 2x4s shall not be less than No. 12 gauge.

OTHER MATERIALS:

1. Tree Dressing - Asphaltic Tree Wound Paint

CONSTRUCTION METHODS:

LEVEL I FENCE PROTECTION:

All trees and shrubs in the proximity of the construction site shall be protected prior to beginning any development activity.

Protective fencing shall be erected outside the dripline at locations shown in the plans or as directed by the Inspector and/or City Arborist or in accordance with the details shown on the plans at the drip line of trees (Root Protection Zone, RPZ) and/or landscape plant material including natural areas. Fencing shall be maintained and repaired by the contractor during site construction.

Protective fence locations in close proximity to street intersections or drives shall adhere to the City of San Antonio's site distance criteria.

The protective fencing shall be erected before site work commences and shall remain in place during the entire construction phase. Access to fenced areas will be permitted only with the approval of the engineer.

The installation posts will be placed every 6 feet (2 m) around the drip line or RPZ and embedded to 18 inches (457 mm) deep. Fabric attachment shall be attached to the installation posts by the use of sufficient wire ties to securely fasten the fabric to the "T" posts as to hold the fabric in a stable and upright position.

1. Do not clear, fill or grade in the RPZ of any tree.

2. Do not store, stockpile or dump any job material, soil or rubbish under the spread of the tree branches.

3. Do not park or store any equipment or supplies under the spread of the tree branches.

4. Do not set up any construction operations under the spread of the tree branches. (E.g. pipe cutting and threading, mortar mixing, painting or lumber cutting)

5. Do not nail or attach temporary signs, meters, switches, wires, bracing or any other item to the trees.

6. Do not permit runoff from waste materials including solvents, concrete washouts, asphalt tack coats (MC-30 oil), etc. to enter the RPZ. Barriers are to be provided to prevent such runoff substances from entering the RPZ whenever possible, including in an area where rain or surface water could carry such materials to the root system of the tree.

The contractor shall avoid cutting roots larger than one inch in diameter when excavation occurs near existing trees. Excavation in the vicinity of trees shall proceed with caution. The contractor shall contact the city inspector.

Remove all trees, shrubs or bushes to be cleared from protected root zone areas as directed by engineer by hand.

Trees damaged or lost due to contractor's negligence during construction shall be mitigated at the contractor's expense and to the engineer's satisfaction.

Any tree removal shall be approved by the city arborist prior to its removal.

Cover exposed roots at the end of each day with soil, mulch or wet burlap.

In critical root zone areas that cannot be protected during construction and where heavy traffic is anticipated, cover those areas with (8) inches of organic mulch to minimize soil compaction. This (8) inch depth of mulch shall be maintained throughout construction.

Water all trees, most heavily impacted by construction activities, deeply once a week during periods of hot dry weather. Spray tree crowns with water periodically to reduce dust accumulation on the leaves.

When installing concrete adjacent to the root zone of a tree, use a plastic vapor barrier behind the concrete to prohibit leaching of lime into the soil. See related specifications.

When an excavation or embankment is placed within the dripline of any tree greater than (8) inches in diameter, a Tree well shall be constructed to protect the tree as indicated, when the cut or fill exceeds (8) inches. See related specifications.

Where paving or filling is necessary within the dripline of any tree (8) inches or greater, a permeable pavement and aeration system must be installed as indicated. See related specifications.

CONSTRUCTION METHODS:

LEVEL II A FENCE PROTECTION:

Protective fencing shall be erected within the RPZ at locations shown in the plans or as directed by the Inspector and/or City Arborist or in accordance with the details shown on the plans at the drip line of trees (Root Protection Zone, RPZ) and/or landscape plant material including natural areas. Fencing shall be maintained and repaired by the contractor during site construction.

Fabric: Fabric (4 foot height or 1.2 m) shall consist of orange plastic fencing as shown on the plans and shall be woven with 2-inch (50 mm) mesh openings such that in a vertical dimension of 23 inches (584 mm) along the diagonals of the openings there shall be at least seven meshes.

1. Installation Posts: Installation posts shall be a minimum of 72 inches (1.5 m) long and steel "T" shaped with a minimum weight of 1.3 pounds per linear foot (6.3 kg per meter).
2. Tie Wire: Wire for attaching the fabric to the t-posts shall be not less than No. 12 gauge galvanized wire. Sufficient fastening material shall be furnished to provide for the securing of the fabric to the "T" line posts.
3. Used Materials: Previously-used materials, meeting the above requirements and when approved by the Engineer, may be used.

LEVEL II B FENCE PROTECTION:

Trunk protection shall be erected at locations shown in the plans or as directed by the Inspector and/or City Arborist shall be maintained and repaired by the contractor during site construction.

1. Installation Sleeve: 2x4 lumber to a height of 4 feet above the root crown.
2. Tie Wire for securing the 2x4s shall not be less than No. 12 gauge

MEASUREMENT:

Protective fencing will be measured by the linear foot of accepted work, complete in place for the duration of construction activity.

PAYMENT:

Tree and Landscape Protective Fencing will be paid for at the unit price bid per linear foot (meter), which price shall be full compensation for furnishing and placing all materials, manipulation, labor, tools, equipment and incidentals necessary to complete the work.

BID ITEMS

Item 801.1: Level I Protective Fencing - per linear foot (meter)

Item 801.2: Level IIA Protective Fencing - per linear foot (meter)

Item 801.3: Level IIB Protective Fencing - per linear foot (meter)

Update: November 2013

THE FOLLOWING ITEMS ARE SPECIAL PROVISIONS TO
THE CITY OF SAN ANTONIO
STANDARD SPECIFICATIONS FOR CONSTRUCTION
DATED NOVEMBER 2013

1. Item 804 New Tree & Shrub Planting and Maintenance…….4 pages

General

1. None

Standard Specifications

1. Adding Item 804 – New Tree & Shrub Planting and Maintenance Specifications (dated November 2013) in its entirety.

ITEM

804 New Tree & Shrub Planting and Maintenance

804.1 DESCRIPTION: *This item shall govern the procedure for selecting planting and maintaining trees and other vegetation to be used as enhancements or for mitigation on a construction project*

804.2 SELECTION OF TREES:

A. Size-grading of trees is in accordance with the Texas Association of Nurseryman Grades and Standards. Following is a summary (caliper is measured by a "slot" type caliper, "pincer" type caliper or a diameter tape):
B. For Shade trees caliper takes precedence. Caliper is measured at 6 inches above soil level in the pot ground for trees up to and including 4 inch caliper size, and 12 inches above the ground for larger trees
C. For flowering trees, height takes precedence for trees up to 6 feet in height and then caliper
D. Trees will be a minimum of 2 inch caliper and/or 6 feet in height unless specified.
E. Trees will be straight, single trunked unless specified or approved.
F. Trees will be containerized/boxed /balled and burlaped/b&b
G. No species substitution unless authorized
H. Trees will be free of insect and diseases with a well-developed rootball no girdling roots
I. For palm trees, measurement will be by overall height or trunk height and will specify to species or to type; palmate or pinnate
    - If a tree transplant or ball and burlap is approved or specified, it must have been grown out in a nursery for at least 2 growing seasons and ball size must comply with ANSI

804.3 PLANTING:

A. Excavate pits, beds and trenches with vertical sides and with bottom of excavation slightly raised at center to provide proper drainage
B. Depth of the excavated area is to be the same as the length of the root ball so that the top of the root flare is at the ground surface level. Minimum depths shall be measured from finished grade
C. Width of excavation must be a minimum of 3 times the diameter of the root ball.
D. Loosen hard subsoil in bottom of excavation
E. Fill excavation for tree/plant with water and allow it to percolate out before planting.
F. Use excavated parent soil material in the backfill mixture at a ratio of 70:30 with the soil amendment as specified in item 802. Particle size of backfill material must be less than 4 inch diameter

G. Saturate with water when the pit or bed is half full of backfill and again when full.
H. Cover excavation area with mulch as specified in item 802
I. Water to prevent soil from dying out
J. Plants will be rejected if the ball of earth surrounding roots has been disturbed or damaged prior to or during installation. Replacement tree/plant to be of equal or better quality
K. Control growth of weeds. Apply a glyphosate type (Round-up 41%) herbicide in the excavated area in accordance with manufacture's label instructions

804.4 QUALITY ASSURANCE:

A. All tree installation work shall be performed by a single firm specializing in tree transplanting work, with a minimum of 3 years experience in the acceptable performance of similar work to that specified. The firm performing the work shall have the following minimum certifications.
B. Texas Nurseryman & Landscape Association (TNLA) certification
C. Be licensed for application and use of pesticides
D. Meet state requirements for insurance
E. Must be bonded

804.5 TREE MAINTENANCE POST TRANSPLATATION:

WATERING THE TREE:

A. The key to newly planted tree survival is providing adequate water
B. Contractor shall water the newly planted trees weekly until the end of the one-year warranty. Contractor shall provide a schedule and method of watering the trees to the City for the project
C. Initially, a newly planted tree needs to be properly watered with an adequate amount to pack the soil, to remove root-drying air and to moisten the root ball.
D. On adequately draining soils, 5 gallons of initial water should be enough.
E. Fast draining soils may need more frequent watering than a slow draining soil.
F. Critical period to provide adequate water during the annual growing season, between late spring and autumn
G. Use of Gatorbags is acceptable method of irrigation. Follow prescribed irrigation schedule for proper establishment

804.6 MULCHING THE TREE:

A. Mulching a newly planted tree ensures that moisture is available to roots over time and reduces grass competition
B. Good mulch (organic materials like leaves, bark, needles and fine wood chips) should ring the tree base (over the critical root zone) but never touch the trunk of the tree. Use local/native hardwood mulch. No fertilizer is necessary when quality composted mulch is used
C. Maintain the mulch level with no more than 4 inches of material over the roots; mulch should not touch the trunk of the tree. A 3' to 6'minimum radius of mulch should be placed around the tree (the wider the better)

804.7 STAKING THE TREE:

A. Not all newly planted trees need staking to remain standing straight. Stake only if the root ball is unstable or the tree trunk is bending. Use only loosely-tied wide straps (recommend use of 'Chain-Lock' staking system) and limit the number of straps to a minimum for support
B. Use tree stakes only when needed. Every tree does not require automatic staking.
C. Inspect all stakes and straps during spring and autumn for loose fit and alter to prevent trunk damage. All straps should be removed after the first or second year

804.8 INSPECTING TREE HEALTH:

A. Checking a tree's health should be done by a certified arborist, a Landscape Architect or registered Landscape Professional an expert. Things that can be done to alert of tree health problems
B. When inspecting a tree consider the following:
C. Is the current year's growth much less than past years' growth? Although fast growth does not necessarily mean good health, a dramatic reduction in growth rate may be an indication of poor health
D. Are there dead limbs, odd colors on leaves and bark or a patchy canopy. These tree symptoms can be the first indicators that a tree is unhealthy and should be inspected in detail
E. Remember that planting a healthy tree in the beginning is the best way to assure its future health

804.9 PRUNING THE TREE:

A. Prune only critical branches that are either dead or broken after planting. Remove multiple leaders to leave only one central stem. (may be best to postpone pruning to avoid transplanting shock due to loss of leaves)
B. Prune only critical branches and/or eliminate extra leaders in the tree's first year. Prune lightly in Year 2 or 3

804.10 REPLACEMENT:

A. Any dead trees or shrubs during the warranty period shall be replaced by the contractor at no cost to the city
B. At the end of the one-year warranty, any tree or shrub that is not in good condition as determined by the city arborist and project manager shall be replaced by the contractor at no cost to the city

804.11 MEASUREMENT:

Tree installations will be measured by the number and size of trees/plants (cost should include installation, warranty, mulch, irrigation/gatorbags, monitoring/treatments as needed, staking, etc.)

804.12 PAYMENT:

Payment shall be made per each of the type and size of tree specified on the bid proposal

804.13 BID ITEM:

Item 804 – New Tree & Shrub Planting and Maintenance

SPECIAL SPECIFICATION

8615

Radar Advance Detection Devices

1. **Description**. Furnish and install radar advance detection devices (RADD) as shown on the plans, and as detailed in this Special Specification.

2. **Materials.**

A. General Requirements.

All materials furnished, assembled, fabricated, or installed under this Item will be new, corrosion resistant, and in strict accordance with the details shown on the plans and in this Special Specification. The Radar Advanced Detection Device will be non-intrusive, easy to install, remotely accessible, and provide multiple connectivity options for easy integration into legacy systems.

The RADD will have a method for automatically calibrating the detection device; this method will be executed in the RADD's internal processor. This auto-calibration method will automatically determine detection thresholds.

B. **Sensor Performance**

The RADD will accurately and continuously detect Estimated Time of Arrival (ETA), speed, and range data for vehicles, or clusters of vehicles simultaneously moving within 100 ft. to 500 ft. from the sensor in the selected direction of travel. The RADD will be mounted in a forward-fire position, looking into either approaching or departing traffic for the selected direction of travel. The RADD will filter the ETA data, speed data, and range data based upon minimum and maximum constraints to produce alerts, customizable for safe and efficient dilemma zone protection, congestion management, and other operational goals.

The RADD will maintain accurate performance in all weather conditions, including rain, freezing rain, snow, wind, dust, fog, and changes in temperatures and light. The device will not rely on temperature compensation circuitry and will be capable of continuous operation over and ambient temperature range from -40° C to 75° C, and a relative humidity range from five percent to 95 percent (non-condensing). RADD operation will continue in rain or snow up to 10 cm per hour, and the device will not experience degraded performance when encased in 1/2 in. of ice.

Speed data will be accurate for individual vehicle measurement when there are no adjacent vehicles traveling in the same direction. Eighty-five percent of all measurements will be within 5 mph of truth when vehicles are not changing speed. Speed accuracy will be verified with radar gun, by video speed trap using the frame rate as a time reference, or equivalent method.

Range data will be accurate for individual vehicle measurement when there are no adjacent vehicles traveling in the same direction. Eighty-five percent of all measurements will be within ten feet of the distributed length of the vehicle when vehicles are not changing speed. Range accuracy will be verified with: LIDAR gun, by video using visual markers as a distance reference and frame rate as a time reference, or equivalent method.

ETA data will be accurate for individual vehicle measurements when there are no adjacent vehicles traveling in the same direction. ETA is the estimated time of arrival as calculated by dividing the vehicles range from the stop bar by the speed of the vehicle. ETA is calculated for purposes of safely and efficiently protecting vehicles within the decision dilemma zone, which is nominally defined to exist for motorists with an ETA between 2.5 and 5.5 seconds from the stop bar who are driving faster than 35 mph when the light turns yellow. Eighty-five percent of all measurements will be within one second of truth for all vehicles not changing speed within the decision dilemma zone. ETA accuracy will be verified with: LIDAR gun, or by video using visual markers as a distance reference and frame rate as a time reference.

3. **Construction** Two RADD units will not be mounted so they are pointed directly at each other unless separated by more than 700 ft. and a RADD will not be placed within 20 feet of another RADD unless each device is configured to operate on a different RF channel using the installation software.

   A. **Mounting Assembly** The RADD will be mounted directly onto a mounting assembly fastened to a pole, overhead mast-arm or other solid structure. The mounting assembly will provide the necessary degrees of rotation to ensure proper installation. It will be constructed of weather resistant materials and will be able to support a 20 lb load.

   B. **Cabling** The RADD will be supplied with a connector cable of the appropriate length for each installation site. The connector will meet the MIL-C-26482 specification; the backshell will be an environmentally sealed shell that offers excellent immersion capability, and designed to interface with the appropriate MIL-C-26482 connector; all conductors that interface with the connector will be encased in a single jacket, and the outer diameter of this jacket will be within the backshell's cable O.D. range to ensure proper sealing; the backshell will have a clamp bar style strain relief with enough strength to support the cable slack under extreme weather conditions. Recommended connectors are Cannon's KPT series, and recommended backshells are Glenair Series 37 cable sealing backshells. The MIL-C-26482 connector will provide contacts for all data and power connection.

      (1) If communication is conducted over the RS-485 bus, the communication cable will be Belden 9331 or an equivalent cable with the following specifications:
      - Shielded, twisted pairs with a drain wire
      - Nominal Capacitance Conductor to Conductor @ 1Khz <= 26pF/Ft
      - Nominal Conductor DC Resistance @ 20 Deg C <= 15 ohms/1000Ft
      - Single continuous run with no splices allowed
      - Terminated only on the two farthest ends of the cable
      - The operational baud rate and cable length shall not exceed the following limits:

Baud Rate*	Cable Length
115.2Kbps	300 feet
57.6Kbps	600 feet
38.4Kbps	800 feet
19.2Kbps	1000 feet
9.6Kbps	2000 feet

**Note: These represent maximum data rates. The data rate used should be the minimum data rate required for operation.*

(2) If communication is conducted over the RS-232 bus, the communication cable will be Belden 9331 or an equivalent cable with the following specifications:

- Shielded, twisted pairs with a drain wire
- Nominal Capacitance Conductor to Conductor @ 1Khz <= 26pF/Ft
- Nominal Conductor DC Resistance @ 20°C <= 15 ohms/1000 Ft
- Single continuous run with no splices allowed
- The RS-232 Driver must be able to source and sink +/- 7mA or more
- The operational baud rate and cable length shall not exceed the following limits:

Baud Rate*		Cable Length	
115.2	Kbps	40	feet
57.6	Kbps	60	feet
38.4	Kbps	100	feet
19.2	Kbps	140	feet
9.6	Kbps	200	feet

**Note: These represent maximum data rates. The data rate used should be the minimum data rate required for operation.*

(3) If 12VDC is being supplied for the RADD, the power cable will be Belden 9331 or an equivalent cable with the following specifications:

- Two shielded, twisted pairs with two drain wires connected in parallel
- Nominal Capacitance Conductor to Conductor @ 1Khz <= 26pF/Ft
- Nominal Conductor DC Resistance @ 20 Deg°C <= 15 ohms/1000 Ft
- The cable length shall not exceed 100 ft.

(4) If 24VDC is being supplied for the RADD, the power cable will be Belden 9331 or an equivalent cable with the following specifications:

- Two shielded, twisted pairs with two drain wires connected in parallel
- Nominal Capacitance Conductor to Conductor @ 1Khz <= 26pF/Ft
- Nominal Conductor DC Resistance @ 20 Deg°C <= 15 ohms/1000 Ft
- The cable length shall not exceed 600 ft.

(5) If a cable length of 600 ft. to 2000 ft. is required, the power cable will be an ANIXTER 2A-1002 or equivalent cable that meets the following requirements:

- 10 AWG Conductor Size/Gauge

- Two Conductor count
- Stranded Cable Type
- Bare Copper material
- 600 Volt range
- 90° Centigrade Temperature rating
- PVC/Nylon Insulation material
- PVC – Polyvinyl chloride jacketing material
- 40 Amps per conductor

Both communication and power conductors may be bundled together in the same cable as long as the above-mentioned conditions are met.

C. **Lightning Surge Protection.** Lightning surge protection that meets or exceeds the EN 61000-4-5 Class 4 specifications will be installed no farther than 40 ft. along the RADD cable from the RADD unit. To ensure the continued operation of the RADD in the presence of electrical surges, all connections to the RADD will be protected, including power, RS-232, RS-485 communication lines and ground.

D. **Power Supply.** The AC to DC power converter supplying the DC voltage for the RADD will be providing the following:

Power Rated	>15 W @25°C / >10 W@74°C minimum per RADD unit
Operating Temperature Range	From –34°C to +74°C
Operating Humidity Range	From 5% to 95% @25°C non-condensing
Input Voltage	From 85 V (AC) to 264 V (AC) or 120 V (DC) to 370 V (DC)
Input Frequency	From 47 Hz to 63 Hz
Output Voltage	24 VDC ±4%
Hold Up Time	>20 ms at 120 V (AC)
Withstand Voltage	Input to Output: 2 kV, Input to Ground: 1.5 kV
Safety Standards	UL 60950, EN60950
EMC Standards	EN55022 Class B and EN61000-3-2, 3
Brown-Out Protection	In brown-out conditions (i.e. <85VAC input) the output voltage will be less than 1 VDC

E. **Communication.** The RADD will provide two or more communication ports that can be accessed simultaneously using any RADD-supported protocol. This will enable multiple operators to collect data from the RADD at the same time without interrupting or interfering with each other. The RADD will provide RS-232 and RS-485 serial communication ports; each communication port will support all of the following baud rates: 9600, 19200, 38400, 57600 and 115200. Additionally, the RS-232 port will be full-duplex and will support true RTS/CTS hardware handshaking for interfacing to various communication devices.

F. **Power Requirements.** The RADD will consume less than 10 watts with a DC input between 12 VDC and 28 VDC. The equipment will be designed such that the failures of the equipment will not cause the failure of any other unit of equipment. Automatic recovery from power failure will be within 15 seconds after resumption of power.

G. **Windows® and PocketPC® -based Software.** The RADD will also include graphical user interface software that displays all configured zones and provides visual representation of all detected vehicle clusters. The detected range, speed, arrival time, and identification number will be viewable on the visual representation of all detected vehicle clusters. The graphical interface will operate on Windows 98, Windows 2000, Windows NT 4.0, Windows XP Pro and Windows PocketPCs equivalent to the Dell Axim X50v. The software will automatically select the correct baud rate.

The graphical user interface will also display all configured alerts and provide visual representation of their actuation. The operator will have the ability to configure alerts using minimum and maximum constraints on the detected ETA, speed, and range of vehicles.

The operator will have the ability to save the configuration information to a file, or reload the RADD configuration from a file, using the graphical user interface software. Using the installation software, the operator will be able to easily change the baud rate on the sensor by selecting baud rates from a drop-down list, as well as add response delays for the communication ports. Additionally, the operator will have the ability to switch between data pushing and data polling, and change the RADD's settings for Flow Control from none to RTS/CTS and vice versa.

The operator will be able to upload new firmware into the RADD's non-volatile memory over any supported communication channel.

H. **RF Design**. All microwave circuitry within the RADD will be designed utilizing active control that dynamically adjusts to compensate for temperature and age variations in component performance. This eliminates most opportunities for human error or age degradation in circuits that contribute to product performance. The circuitry will be void of any manual tuning elements that could lead to human error and degraded performance over time.

All transmit modulated signals will be generated by means of digital circuitry, such as a direct digital synthesizer, that is referenced to a frequency source that is at least 50 ppm stable over the specified temperature range, and ages less than six ppm per year. Any up-conversion of a digitally generated modulated signal will preserve the phase stability and frequency stability inherent in the digitally generated signal. These specifications ensure that during operation the RADD strictly conforms to FCC requirements and that the radar signal quality is maintained for precise algorithmic quality.

The RADD antennae will be designed on printed circuit boards, eliminating the need for RF connectors and cabling that result in decreased reliability. Printed circuit antennae are less prone to physical damage due to their extremely low mass.

The antennae parameters will meet the following criterion to ensure quality performance:

1) 3 dB Elevation Beam Width: > 65 degrees
2) 3 dB Azimuth Beam Width: < 15 degrees
3) Side Lobes: < -20 dB

I. **Enclosure.** The RADD will be enclosed in a Lexan polycarbonate, ultraviolet resistant material and will be classified as watertight according to the NEMA 250 Standard. The enclosure will be classified "f1" outdoor weatherability in accordance with UL 746C.

The RADD will be able to withstand a drop of up to 5 ft. without compromising its functional and structural integrity.

J. **Input File Cards.** The RADD manufacturer will provide an optional input file card compatible with 170, 2070, NEMA TS1 and NEMA TS2 input file racks. The input file card will translate per vehicle data packets or actuation packets from the RADD into corresponding contact closure outputs. Operators will be able to assign any contact closure output channel to any configured alert. These settings will be saved in non-volatile memory on the input file card for complete recovery in case of power failure.

The input file card will support Dual Loop (Speed Trap) emulation, as well as the following modes of operation:

- Actuation (true presence filtered by conditional alert constraints output in real time with 2.5 ms resolution)
- Pulse (a single 125 ms output pulse for each vehicle)
- Presence (an output pulse corresponding to the duration of each vehicle cluster in the detection zone with a resolution of 2.5 ms)
- Single Loop Speed (duration of the pulse corresponds directly to the speed of the vehicle, speed (mph) = 13.64/duration in seconds)

The input file card will receive data packets over an RS-485 bus at any of the following baud rates: 9600, 19200, 38400, 57600 and 115200. Also, the input file card will auto-baud and auto-detect a RADD over wired and wireless communication channels that have a maximum latency of 500 ms.

The input file card will comply with the NEMA TS2-1998 Traffic Controller Assemblies with NTCIP Requirements, Section 2.8 specification. Documentation and results of the NEMA TS2-1998 test will be provided.

The input file card will also provide failsafe operation, so that in the event of failure of communication from the sensor, a constant call will be placed on all contact closure channels.

Additionally, the input file card will comply with the EN 61000-4-5 Class 4 lightning surge protection test specification. Documentation and results of the EN 61000-4-5 Class 4 test will be provided.

K. **Manufacturing Requirements.** The RADD will be manufactured and assembled in the U.S.A. The internal electronics of the RADD will utilize automation for surface mount and wave solder assembly, and will comply with the requirements set forth in IPC-A-610C Class 3, Acceptability of Electronic Assemblies.

The RADD will undergo a rigorous sequence of operational testing to ensure product functionality and reliability. Testing will include:

- Functionality testing of all internal subassemblies
- Unit level burn-in testing of duration 48 hours or greater
- Final unit functionality testing prior to shipment

Test results and all associated data for the above testing will be provided, for each purchased RADD by serial number, upon request. Additionally, manufacturing quality data will be maintained for each purchased RADD by serial number and will also be made available upon request.

Externally, the RADD will be modular in design to facilitate easy replacement in the field. The total weight of the RADD will not exceed five lbs. All external parts will be made of corrosion resistant material, and all materials will be protected from fungus growth and moisture deterioration.

L. **FCC.** Each RADD will be Federal Communications Commission (FCC) certified under CFR 47, Part 15, section 15.245 as a field disturbance sensor, or section 15.249 as an intentional radiator. This certification will be displayed on an external label on each device according to the rules set out by the FCC.

The RADD will transmit in the 10.50 – 10.55 GHz or 24.00 – 24.25 GHZ frequency band and will meet the power transmission requirements specified under sections 15.245 and 15.249 of CFR 47.

The manufacturer will provide documentation proving compliance to all FCC specifications.

M. **NEMA 4X Testing.** The RADD enclosure will conform to test criteria set forth in the NEMA 250 Standard for Type 4X enclosures. Third party enclosure test results will be provided for each of the following Type 4X criteria:
- External Icing (NEMA 250 Clause 5.6)
- Hose-down (NEMA 250 Clause 5.7)
- 4X Corrosion Protection (NEMA 250 Clause 5.10)
- Gasket (NEMA 250 Clause 5.14)

N. **NEMA TS2-1998 Testing.** The RADD will comply with the applicable standards stated in the NEMA TS2-1998 Standard. Third party test results will be made available for each of the following tests:
- Shock pulses of 10g, 11 ms half sine wave
- Vibration of .5 Grms up to 30 Hz
- 300 V positive/negative pulses applied at 1 pulse per second at minimum and maximum DC supply voltage
- Cold temperature storage at -45° C for 24 hours
- High temperature storage at +85° C for 24 hours
- Low temp, low DC supply voltage at -34° C and 10.8 VDC

- Low temp, high DC supply voltage at -34° C and 26.5 VDC
- High temp, high DC supply voltage at 74° C and 26.5 VDC
- High temp, low DC supply voltage at 74° C and 10.8 VDC

O. **Support.** Installers and operators of the RADD will be fully trained in the installation, auto-configuration and use of the device.

The manufacturer will thoroughly train installers and operators to correctly perform the tasks required to ensure accurate RADD performance. The amount of training necessary for each project will be determined by the manufacturer and will be included, along with training costs, in the manufacturer's quote. In addition, technical support will be available to provide ongoing operator assistance.

1) Training. Training will consist of comprehensive classroom labs and on-hands, in-the-field installation and configuration training.

Classroom Lab Training will involve presentations outlining and defining the RADD, its functions and the procedures for proper operation. These presentations will be followed by hands-on labs in which trainees will practice using the equipment to calibrate and configure a virtual device. To facilitate the classroom presentation and hands-on labs, the vendor will provide the following items for the duration of training:

- Knowledgeable trainer or trainers thoroughly familiar with the RADD and its processes.
- Presentation materials, including visual aids, printed manuals and other handout materials for each student.
- Computer files, including video and raw data, to facilitate the virtual calibration and configuration of the RADD.
- Laptop computers with the necessary software, and all necessary cables, connectors, etc.
- All other equipment necessary to facilitate the virtual calibration and configuration of the RADD.

Field Training will provide each trainee with the hands-on opportunity to install and calibrate the RADD in the field. Training will be such that each trainee will mount and align the RADD correctly.

2) Technical Assistance. A manufacturer's technical representative will be available to assist with the physical installation, alignment and auto-calibration of each supplied RADD. Technical support will be provided thereafter to assist with troubleshooting, maintenance, or replacement of devices should such services be required

P. **Documentation.** The following documentation and specification test results will be supplied by the manufacturer at the time of the bid submittal. Attached documents will include the following:

- Auto-calibration documentation
- EN 61000-4-5 Class 4 Lightning Surge Protection test results
- FCC CFR 47 certification
- NEMA 250 Standard for Type 4X Enclosure third-party test data
- NEMA TS2-1998 Standard third-party test data

4. **Measurement.** This Item will be measured per each radar advanced detection device as installed, and connected. The RADD system will be warranted to be free from material and workmanship defects for a period of 2 year from the date of installation.

5. **Payment.** The work performed and materials furnished in accordance with this Item and measured as provided under "Measurement" will be paid for under the unit bid price for "Radar Advance Detection Device". This is full price for furnishing, installing, and establishing a connection to each RADD. Any tools or incidentals needed to accomplish this will not be paid for separately, but will be considered subsidiary to this bid Item.

ITEM NO. 833
METER AND METER BOX INSTALLATION

833.1 **DESCRIPTION:** This item shall consist of meter and meter box installation and adjustment installed in accordance with these specifications and as directed by the Engineer.

833.2 **SUBMITTALS:** Contractor shall submit manufacturer's product data, instructions, recommendations, shop drawings, and certifications.

833.3 **MATERIALS**: The materials for meter and meter box installation and adjustment shall conform to the specifications contained within the latest revision of SAWS' Material Specification Item No. 10-30, "Meter Boxes."

833.4 **CONSTRUCTION:**

1. Physical movement of existing meters and meter boxes to new locations may be required where service lines are transferred to new mains in conjunction with main replacement work. Unless specified otherwise, the Contractor shall move existing meters and meter boxes and reconnect and adjust customer's yard piping as part of transferring service lines. A dielectric coupling (PVC schedule 80) shall be installed within the meter box between the meter and the customer's yard piping.

   Round and oval meter boxes with round covers shall be salvaged and returned to the Owner by the Contractor. The Contractor shall also replace the salvaged meter boxes with the new, appropriately styled oval plastic meter box with oval cover, or rectangular meter box. Unless otherwise specified, the old service line shall be abandoned after the existing meter has been reset in the existing or new meter box.

   Where meter boxes are installed in sidewalks or driveways, the Contractor shall install a number one meter box (2 pieces) as shown in the Material Specifications Item No. 10-30 and theDD-833 Standard Drawing Series.

   New meters will be set by the Owner where mains are extended and new services lines are installed for new or initial customer service. In lieu of the new meter, the Contractor shall furnish and install a meter template in accordance with the DD-833 Standard Drawing Series. Contractor shall make a 1 inch diagonal cut thru the wall of the template.

   Meter and meter box configuration, shall have the meter set horizontal, approximately 6 inches below the top of meter box, so that the meter is above the bottom of the meter box and in-line with the meter box lid opening. The top of the meter box shall be flush with the existing ground

surface. All excess soil above the meter coupling, meter flange and meter nuts inside the meter box shall be removed so that the meter register is clearly visible. The Contractor shall exercise special precautions during excavation at the existing meter location in order to minimize the disturbance of the customer's yard piping. However, if the existing meter elevation is low, the Contractor shall raise the existing meter to conform to the correct configuration indicated herein. Adjustment of meter to proper grade is incidental to the construction and will not be paid for separately.

Where required, pressure reducing valves shall be installed by the customer in accordance with the Uniform Plumbing Code and shall be placed beyond the outlet side of the meter, but not within the Owner's meter box. The pressure reducing valve shall be the property of the water user who will be responsible for its installation, maintenance, and replacement, as required.

2. The meter box adjustment shall not exceed 10 linear feet from the existing box.

833.5 **MEASUREMENT:** Relocation of meters and boxes will be measured by the unit of the various types and sizes of meters and boxes relocated.

833.6 **PAYMENT:** Payment for "Existing Meter and Existing Meter Box Relocation (⅝ inch through 2 inch meter)" will be made at the unit price bid for each existing meter and existing meter box relocated. Such payment shall also include; excavation, hauling and disposition of surplus materials, sand backfill, removal and replacement of yard piping with copper tubing of the various types and sizes and in the quantities necessary to complete the connection and adjustment between the relocated existing meter and existing meter box, and the existing yard piping.

Payment for "Existing Meter and New Meter Box Relocation (⅝ inch through 2 inch meter)" will be made at the unit price bid for each existing meter relocated to a new meter box. Such payment shall also include excavation, hauling and disposition of surplus materials, sand backfill, removal and replacement of whatever type surface structure encountered, salvaging the existing meter box, reconnection and adjustment of yard piping with copper tubing of the various types and sizes and in the quantities necessary to complete the connection between the relocated existing meter and new meter box, and the existing yard piping.

Payment for number one meter box installation in sidewalks and driveways shall be paid in the amount of difference between the standard meter box and the number one box.

- End of Specification -

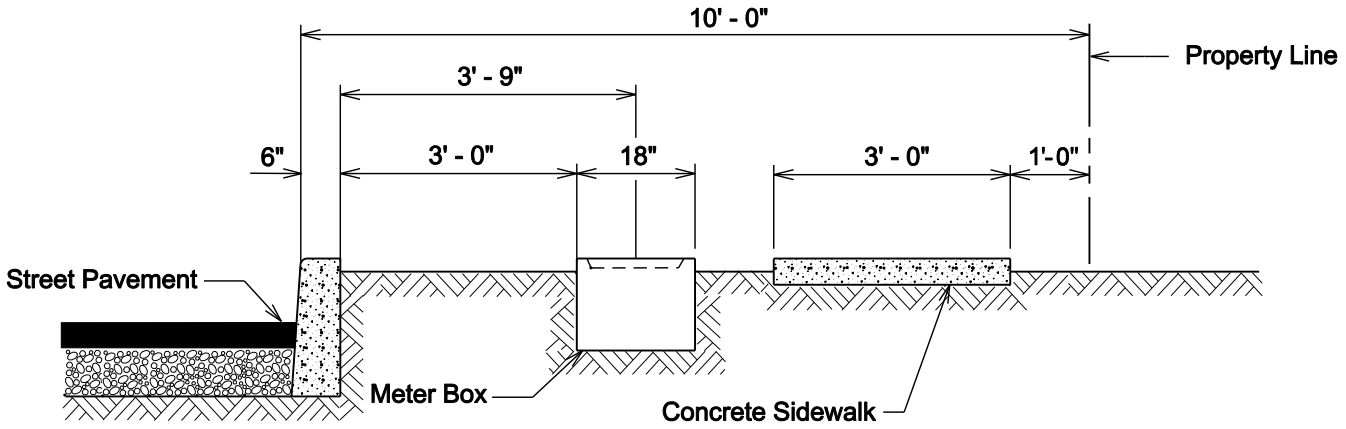

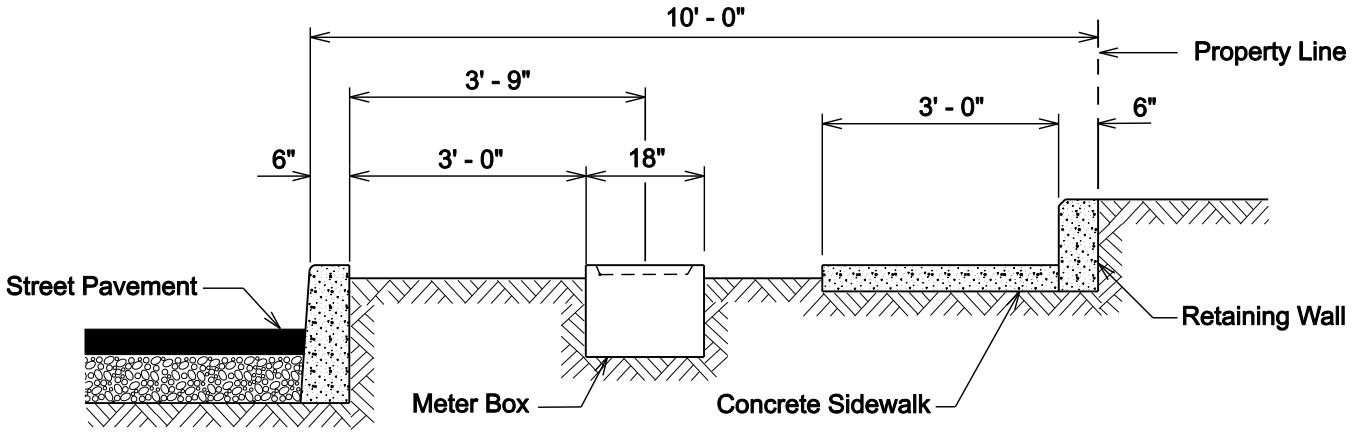

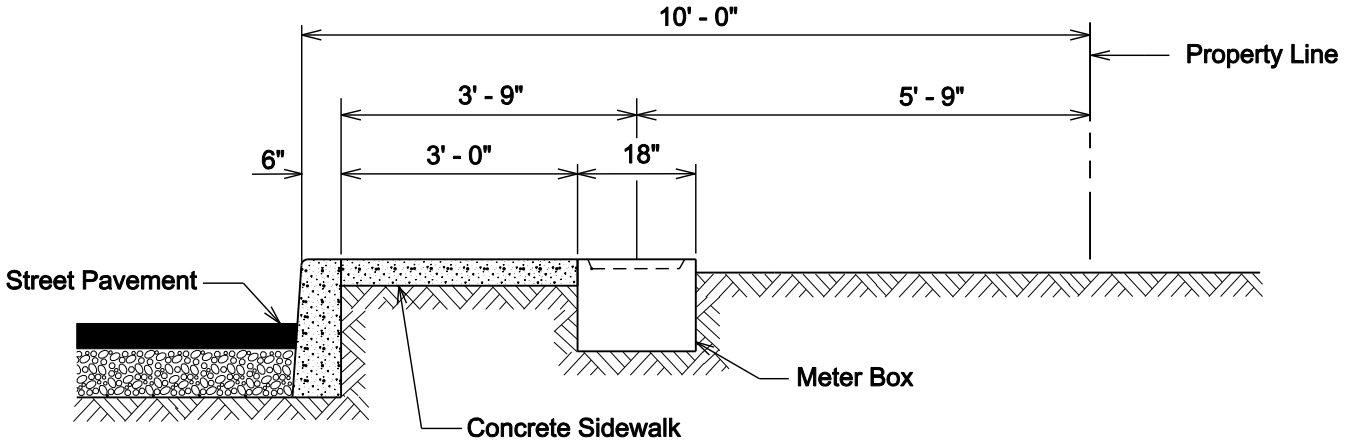

Note:
Meter Box location in commercial and industrial areas will be as directed by the Inspector.

PROPERTY OF SAN ANTONIO WATER SYSTEM SAN ANTONIO, TEXAS	TYPICAL METER BOX LOCATION	APPROVED	REVISED	
		MARCH 2008	APRIL 2014	
		DD-833-01		SHEET 1 OF 1

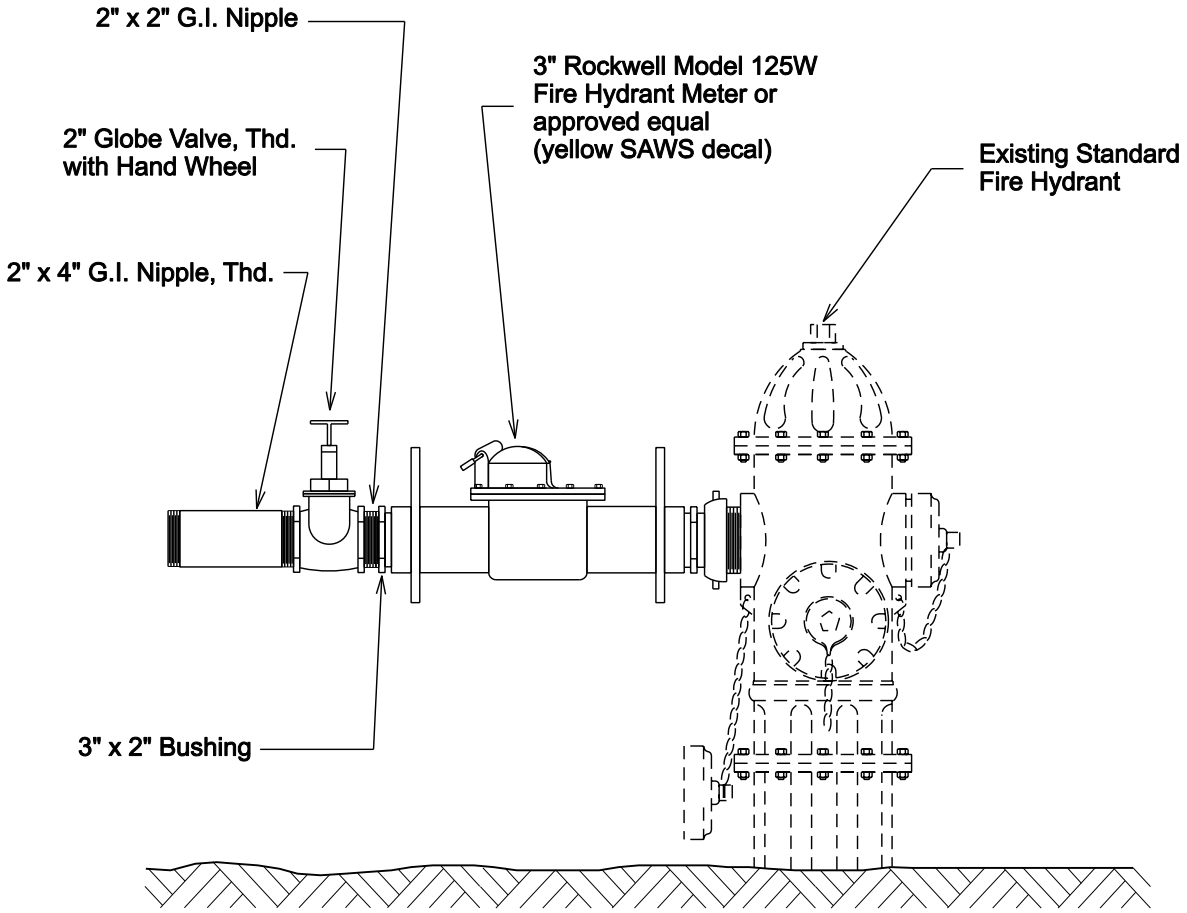

NOT TO SCALE

PROPERTY OF SAN ANTONIO WATER SYSTEM SAN ANTONIO, TEXAS	TEMPORARY 3" FIRE HYDRANT METER	APPROVED	REVISED
		MARCH 2008	APRIL 2014
		DD-833-02	SHEET 1 OF 1

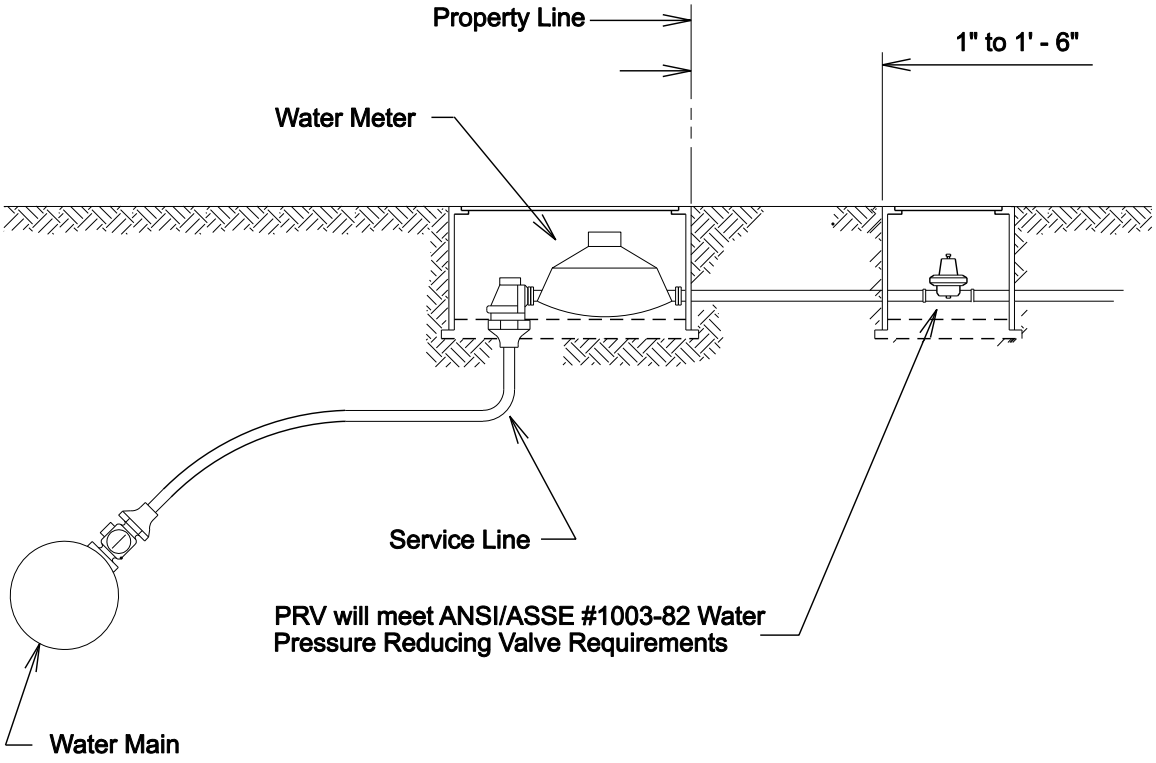

3/4" THRU 2" SERVICE
PRESSURE REDUCING VALVE

Note:
For Tapping Schedule, See DD-824-01 Sheet 3 of 3.

PROPERTY OF SAN ANTONIO WATER SYSTEM SAN ANTONIO, TEXAS	SERVICE INSTALLATION WITH PRESSURE REDUCING VALVE	APPROVED	REVISED
		MARCH 2008	APRIL 2014
		DD-833-03	SHEET 1 OF 1

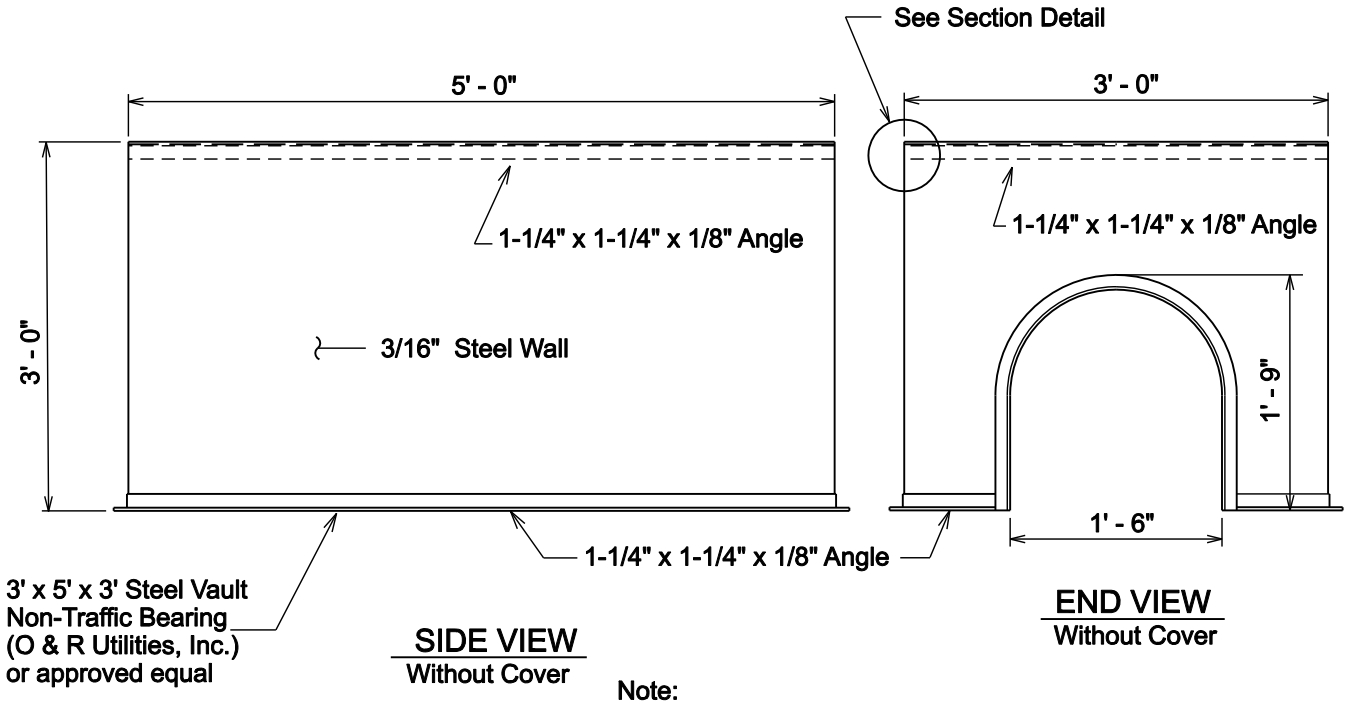

Note:
Paint inside of vault with one coat of rust-inhibitive primer and outside with one coat of rust-inhibitive primer plus one coat of aluminum paint.

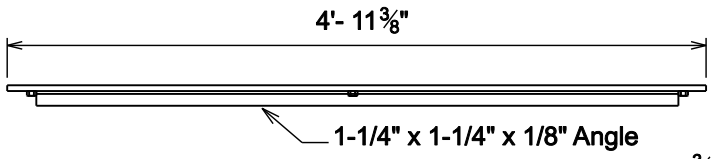

COVER

REFER TO SAWS MATERIAL SPECIFICATIONS FOR ACCEPTABLE PRODUCTS

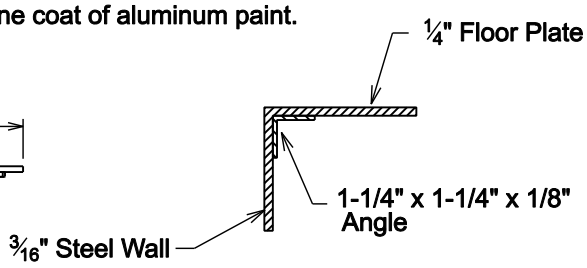

SECTION DETAIL

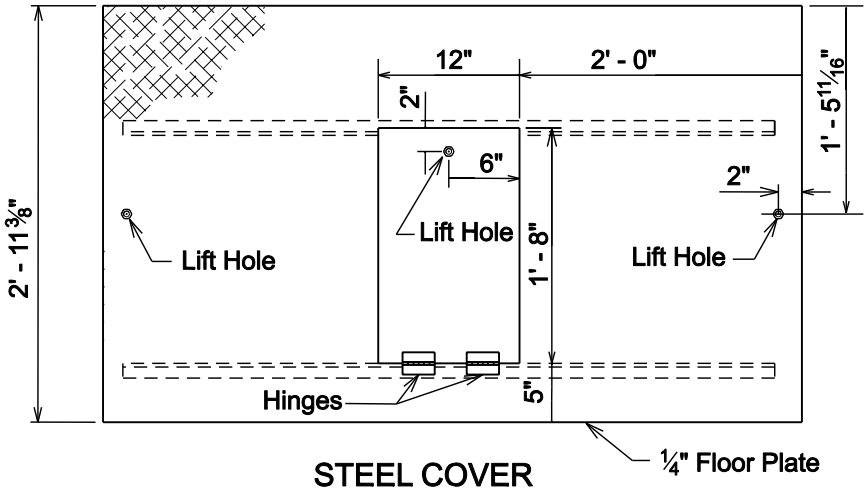

STEEL COVER

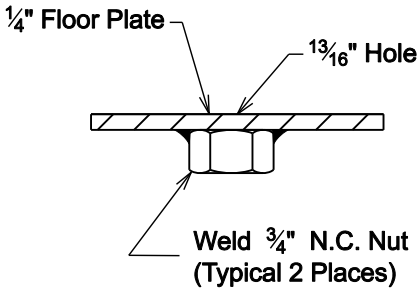

LIFT HOLE

3' x 5' x 3' RECTANGULAR STEEL VAULT
(NON-TRAFFIC BEARING LOCATION)

PROPERTY OF SAN ANTONIO WATER SYSTEM SAN ANTONIO, TEXAS	VAULT FOR 3", 4", 6" & 8" TURBINE METER AND 6" & 8" DETECTOR CHECK INSTALLATION	APPROVED MARCH 2008	REVISED APRIL 2014
		DD-833-04	SHEET 1 OF 1

ITEM NO. 851
ADJUSTING EXISTING MANHOLES

851.1 **DESCRIPTION:** This item shall consist of the adjustment of all existing manholes, to include the replacing of existing manhole covers and rings regardless of type shown in the contract documents and in conformity with the provisions of these specifications or as directed by the Engineer. All manholes shall be watertight and coated with a SAWS-approved sewer coating. The context of this specification is limited to adjusting the final elevation of the manhole by the maximum or minimum number of throat rings. Manhole covers may be either watertight or water resistant, depending upon their specific location. Every manhole cover located in an identified 100-year floodplain, or in the Edwards Aquifer Recharge Zone, shall be watertight. Sewer manhole ring and cover castings shall meet the current requirements of AASHTO Designation M306-10.All manholes requiring adjustments beyond the maximum or minimum number of throat rings (described herein), shall be subject to Item No. 855, "Reconstruction of Existing Manholes."

851.2 **SUBMITTALS:** Contractor shall submit manufacturer's product data, instructions, recommendations, shop drawings, and certifications.

851.3 **CONSTRUCTION:** Manholes shall be lowered below street subgrade before placing base materials, and openings shall be protected by temporary hatch covers. Manholes adjusted in non-paved areas shall be set per proposed final grade.

Existing manhole rings and covers which are determined by the Inspector to be in an unacceptable condition, will be removed and replaced with new rings and covers. If the cone section is removed, the Contractor is to upgrade it to a 30 inch opening as required by 30 TAC § 217. All manhole openings upgraded to 30 inches shall then be subjected to all provisions of Item No. 855, "Reconstruction of Existing Manholes." Contractor shall take all necessary measures to prevent damage to existing or new rings, covers, or cones from equipment and materials used in, or taken through, the work area. If an existing or new manhole cover, ring, or cone is damaged by the Contractor, it shall be replaced (as directed by the Inspector) by the Contractor at his own expense. If concrete throat rings are to be installed, they must be used in conjunction with a UV stabilized polyethylene liner and I/I barrier. I/I barrier must meet the following ASTM standards: ASTM D790/1505 Density of Polyethylene Materials, ASTM D1238-10 Melt Flow Index, ASTM 638-10 Tensile Strength @ Yield (50mm/mm), ASTM 790 Flexural Modulus, ASTM 648 Heat Deflection Temperature @ IGEPAL, ASTM

1693-12 EsCR, 100% IGEPAL/10% IGEPAL.

Manholes shall be adjusted after the street's base material has been laid and before placing of the final surface course. Manholes that are going to be adjusted on an existing surface course (not planned for replacement) will be in accordance to the City of San Antonio Utility Excavation Criteria Manual Standard Drawing No. 8.8, but must first be directed by the Engineer. All manholes shall then be raised, or lowered a sufficient height so as to be level with the finished surface course. Adjustment in height will be made by the addition or removal of "throat rings" above the manhole cone, where feasible. A minimum of two and a maximum of six throat rings may be used at each adjusted manhole.

The standard manhole ring and cover shall be ductile iron and manufactured to the dimensions shown in the Detail Drawing Series DD-852. The ring and cover shall be hinged. Lifting slots cast into the covers shall be provided for lifting purposes. A water-resistant (cam lock) hinged cover shall be used in areas of minimal infiltration potential to allow venting. A watertight (bolt down) ring and covers must be used in areas of high infiltration potential, such as in the Edward's Aquifer Recharge Zone, an identified 100-year floodplain, or as otherwise directed by the Engineer. The nominal cover diameter shall be 32 inches, with a 30 inch clear opening, as required by TCEQ. Rings shall have a minimum of four 1 inch holes/slots for anchoring purposes. Rings shall be a minimum of 4-1/2 inches in height or as otherwise accepted by the Engineer. Slots for embedment/lightening are not allowed in ring flanges.

Water-Resistant Rings and Covers: Rings and covers shall have two hinges for added stability. The hinge shall have a drain to allow for proper debris and foreign object removal. Prior to acceptance of the work, a stainless steel keyed "cam" lock shall be provided by the Contractor to the Inspector. When the key is inserted in the cam, it shall remain in the lid while the cam is in the open (unlocked) position. When in the closed (locked) position, the key can be removed. When not in use, the cam lock key hole shall be covered with a plastic plug to prevent infiltration of debris. The cover shall positively lock at 90° to prevent accidental closure and open fully to 120°. The cover shall also include a single multi-tool lifting slot adjacent to the edge of the cover to facilitate opening/lifting/prying once it is unlocked. Covers shall be provided with a continuous vulcanized (one piece) EPDM gasket with a shore durometer of 70 ±5 permanently attached to the cover.

Watertight Rings and Covers: Rings and covers shall be the same as above for water-resistant version, except the covers shall be bolted to the ring instead of secured with the cam lock mechanism. No vent hole(s) shall be provided. A minimum of four 1/2 inch diameter, stainless steel, hex head bolts shall be

provided for each cover. The 4 bolt holes in the covers shall be evenly spaced and provided with a minimum 1-½ inch diameter counter sink for the bolt heads. On the fastened and bolted position, the bolt heads shall not extend above the surface or the cover. Washers of a size and material as approved by the Engineer shall be provided for the bolts to insure air and water tightness.

The finished ring and cover shall have the bearing surfaces machined ground and sets of rings and covers shall be marked in such a way that they can be matched for assembly in the field. All covers shall have the words "SAN ANTONIO WATER SYSTEM Sanitary Sewer" cast thereon. Ring and cover shall have the approved foundry's name, part number, country of origin preceded by "Made in" (example: MADE IN USA) in compliance with the country of origin law of 1984, and production date (example: mm/dd/yy) for tracking purposes. Each casting must be marked with DI and ASTM A536 or A536 80-55-06 to verify the materials used. Castings without proper markings shall be rejected.

Material excavation from around the manholes shall be replaced with flowable fill in accordance with these specifications, and select materials from the excavation (as shown in the contract documents). All excess materials shall be disposed of by the Contractor at his own expense and in an approved location. The Contractor also has the option of backfilling with approved secondary materials, subject to the provisions of Item No. 804, "Excavation, Trenching and Backfill."

851.4 **MEASUREMENT:** Manholes completely adjusted, as prescribed above, will be measured by the unit of each manhole adjusted. The excavation and the amount of flowable fill, reinforced concrete, or any other material as necessary to fill the area excavated, will not be measured for payment.

851.5 **PAYMENT:** The work performed as prescribed by this item will be paid for at the contract unit price bid per manhole for "Adjusting Existing Manholes," which price shall be full compensation for all excavation, including saw cutting of surfaces as required, reinforced concrete and disposal of material excavated; for furnishing and placing all materials and for all labor, tools, equipment and incidentals necessary to complete the work.

- End of Specification -

ITEM NO. 855
RECONSTRUCTION OF EXISTING MANHOLES

855.1 **DESCRIPTION:** This item shall consist of the reconstruction of all existing manholes, all types and sizes, to include the replacement of manhole ring and covers, the cones, manhole section(s) required regardless of type shown in the contract documents and in conformity with the provisions of these specifications. All material and construction work shall be in accordance with current Texas Commission on Environmental Quality (TCEQ) rules to include: Design Criteria for Sewage Systems (30 TCEQ § 217). All reconstructed manholes shall be watertight and coated with a SAWS-approved sewer coating. Manhole covers may be either watertight or water resistant, depending on their specific location. Every manhole cover located in an identified 100-year floodplain, or in the Edwards Aquifer Recharge Zone, shall be watertight. Sewer manhole ring and cover castings shall meet the current requirements of AASHTO Designation M306-10. Existing Monolithic Manholes are not to be reconstructed, but replaced under Item Nos. 852, "Sanitary Sewer Manholes" or 850, "Sanitary Sewer Structures." The approved list of sewer coating manufacturers will be found herein.

855.2 **SUBMITTALS:** Contractor shall submit manufacturer's product data, instructions, recommendations, shop drawings, and certifications.

855.3 **MATERIALS:**

1. Precast Reinforced Concrete Manhole Sections: Precast reinforced concrete manhole sections shall conform to the requirements of ASTM Designation C478-12a.

2. Mortar: Mortar shall be composed of 1 part Portland Cement, 2 parts sand and sufficient water to produce a workable mixture. When used to plaster manholes, it may be composed of 1 part cement to 3 parts sand. Lime up to 10% may be used.

3. Manhole Ring and Cover: The standard manhole ring and cover shall be ductile iron and manufactured to the dimensions shown in the Detail Drawing Series DD-852. The ring and cover shall be hinged. Lifting slots cast into the covers shall be provided for lifting purposes. A water-resistant (cam lock) ring and cover shall be used in areas of minimal infiltration potential to allow venting. A watertight (bolt down) ring and

cover must be used in areas of high infiltration potential, such as in the Edward's Aquifer Recharge Zone, an identified 100-year floodplain, or as otherwise directed by the Engineer. The nominal cover diameter shall be 32 inches, with a 30 inch clear opening, as required by TCEQ. Rings shall have a minimum of four 1 inch holes/slots for anchoring purposes. Rings shall be a minimum of 4-1/2 inches in height, or as otherwise accepted by the Engineer. Slots for embedment/lightening are not allowed in ring flanges.

a. Water-resistant Rings and Covers: Rings and covers shall have two hinges for added stability. The hinge shall have a drain to allow for proper debris and foreign object removal. Prior to Acceptance of the work, a stainless steel keyed "cam" lock shall be provided by the Contractor to the Inspector. When the key is inserted in the cam, it shall remain in the lid while the cam is in the open (unlocked) position. When in the closed (locked) position, the key can be removed. When not in use, the cam lock key hole shall be covered with a plastic plug to prevent infiltration of debris. The cover shall positively lock at 90° to prevent accidental closure and open fully to 120°. The cover shall also include a single multi-tool lifting slot adjacent to the edge of the cover to facilitate opening/lifting/prying once it is unlocked. Covers shall be provided with a continuous vulcanized (one piece) EPDM gasket with a shore durometer of 70 ±5 permanently attached to the cover.

b. Watertight Rings and Covers: Rings and covers shall be the same as above for water-resistant version, except the covers shall be bolted to the ring instead of secured with the cam lock mechanism. No vent hole(s) shall be provided. A minimum of four 1/2 inch diameter, stainless steel, hex head bolts shall be provided for each cover. The 4 bolt holes in the covers shall be evenly spaced and provided with a minimum 1-½ inch diameter counter sink for the bolt heads. On the fastened and bolted position, the bolt heads shall not extend above the surface or the cover. Washers of a size and material as approved by the Engineer shall be provided for the bolts to insure air and water tightness.

The finished ring and cover shall have the bearing surfaces machined ground and sets of rings and covers shall be marked in such a way that they can be matched for assembly in the field. All covers shall have the words "SAN ANTONIO WATER SYSTEM Sanitary Sewer" cast thereon.

Ring and cover shall have the approved foundry's name, part number, country of origin preceded by "Made in" (example: MADE IN USA) in compliance with the country of origin law of 1984, and production date (example: mm/dd/yy) for tracking purposes. Each casting must be marked with DI and ASTM A536 or A536 80-55-06 to verify the materials used. Castings without proper markings shall be rejected.

4. Throat Rings: Throat rings shall be made of either HDPE or reinforced concrete and have a maximum thickness of 2 inches. The internal diameter shall match that of the ring and cover's opening. Concrete shall conform to the provisions of Item No. 300 "Concrete (Natural Aggregate)." If concrete throat rings are to be utilized, they must be used in conjunction with a UV stabilized polyethylene liner. I/I barrier must meet the following ASTM standards: ASTM D790/1505 Density of Polyethylene Materials, ASTM D1238-10 Melt Flow index, ASTM 638-10 Tensile Strength @ Yield (50mm/mm), ASTM 790-10 Flexural Modulus, ASTM 648-07 Heat Deflection Temperature @IGEPAL, ASTM 1693-12 EsCR, 100% IGEPAL/10% IGEPAL. A minimum of two and a maximum of four throat rings may be used at each manhole reconstructed.

855.4 **CONSTRUCTION:** Manholes shall be raised or lowered by replacing the existing cone and manhole section or sections as required for installation to the finished surface course. All openings shall be protected by hatch covers or the necessary steel plates. The Contractor shall be required to backfill all manholes with an approved flowable fill (in accordance with all requirements of the right-of-way owner having jurisdiction over the project scope) up to 1 foot above the cone section. The Contractor also has the option of backfilling with approved secondary materials, subject to the provisions of Item No. 804, "Excavation, Trenching and Backfill." All excess materials (of any type) shall be disposed of by the Contractor at his own expense, and in an approved location.

Reconstructed manholes shall also be cleaned of any debris as required by the Inspector. If a new manhole cover, ring, or reconstructed manhole is damaged by the Contractor, it shall be replaced (as directed by Inspector) by the Contractor at his own expense. All installed concrete throat rings must be used in conjunction with a UV stabilized polyethylene liner and I/I barrier. I/I barrier must meet the following ASTM standards: ASTM D790/1505 Density of Polyethylene Materials, ASTM D1238 Melt Flow index, ASTM 638 Tensile Strength @ Yield (50mm/mm), ASTM 790 Flexural Modulus, ASTM 648 Heat Deflection temperature @IGEPAL, ASTM 1693 EsCR, 100% IGEPAL/10% IGEPAL.

For reconstructed existing manholes, apply a combination of both products with the cementitious coating first, followed by the epoxy coating. Kerneos SewperCoat 2000 HR regular, applied at the required one inch thick application, is the only product approved which does not require a subsequent epoxy coating. Other approved materials are as follows:

1. Cementitious coating: With required one inch thick application.

    a. Permacast CR-5000;

    b. Strong - Seal MS-2C;

    c. Standard Cement Material Inc. Reliner;

    d. Quadex Aluminaliner;

    e. ConShield Biotech Armor.

2. Epoxy coating: With specified thickness application.

    a. Raven 405 Series High Build Epoxy Liner: Required thickness – 125 mils;

    b. Spray Wall polyurethane System: Required thickness – 125 mils;

    c. Caboline Plasite 4500: Required thickness – 125 mils.

855.5 **TESTING:** The Contractor shall perform the testing for all sanitary sewer manholes in accordance with the following.

1. Leakage Testing: All manholes must pass a leakage test. The contractor shall test each manhole (after reconstruction and backfilling) for leakage, separate and independent of all other sanitary sewer piping, by means of either a hydrostatic test, vacuum test, or other methods approved by the Engineer. The Contractor is hereby instructed to conduct either of the two identified tests in the following manner:

    a. Hydrostatic Testing: Hydrostatic testing shall be conducted by utilizing approved plugs to seal all influent and effluent pipes in the manhole and filling the manhole to the top of the cone with

water. Additional water may be added over a 24-hour period to compensate for absorption and evaporation losses. At the conclusion of the 24-hour saturation period, the manhole shall be filled to the top and observed. Any measureable loss within a 30 minute period shall be considered an unsuccessful test and thus require the Contractor to assess the needed repairs, perform such repairs (subject to the approval of the Engineer), and notify the Inspector when the retest will be performed. All effort, materials, or other costs shall be solely at the Contractor's expense.

b. Vacuum Testing:

(1) General: Manholes shall be tested after construction/installation and backfilling with all connections (existing and/or proposed) in place. Drop-connections and gas sealing connections shall be installed prior to testing.

(2) Test Procedure: The lines entering the manhole shall be temporarily plugged with the plugs braced to prevent them from being drawn into the manhole. The plugs shall be installed in the lines beyond drop connections, gas sealing connections, etc. Prior to performing the test, the Contractor shall plug all lift holes and exterior joints with a non-shrink grout and plug all pipes entering the manhole. No grout shall be placed in horizontal joints prior to testing. Contractor shall use a minimum 60 inch/lb torque wrench to tighten the external clamps that secure the test cover to the top of the manhole. The test head shall be inflated in accordance with the manufacturer's recommendations. A vacuum of 10 inches of mercury shall be drawn, and the vacuum pump will be turned off. With the valve closed, the level vacuum shall be read after the required test time. If the drop in the level is less than 1 inch of mercury (final vacuum greater than 9 inches of mercury), the manhole will have passed the vacuum test. The required test time is 2 minutes.

(3) Acceptance: Manholes will be accepted with relation to vacuum test requirements, if they meet the criteria above. Any manhole which fails the initial test must be repaired

with a non-shrink grout or other suitable material based on the material of which the manhole is constructed. The manhole shall be retested as described above until a successful test is attained. After a successful test, the temporary plugs will be removed. To ensure that the plugs have been removed, Contractor shall only do so in the presence of the Inspector.

(4) Repairs to Existing Manholes: Any existing manhole which fails to pass the vacuum test shall be closely examined by the Inspector and the Contractor to determine if the manhole can be repaired. Thereafter, the Contractor shall either repair or remove and replace the manhole as directed. The manhole shall then be retested and coated with a SAWS-approved sewer coating as stated above. The Owner may elect to simply remove and replace the existing manhole with a new one. Any manhole excavated for repairs or excavated for tie in, shall be backfilled with flowable fill up to 1 foot below the top of the cone. The Contractor also has the option of backfilling with approved secondary materials, subject to the provisions of Item No. 804, "Excavation, Trenching and Backfill."

(5) Measurement and Payment: Vacuum testing of new structures will not be a pay item. The cost of this work will be included in the bid price for the new manhole. Each vacuum test of an existing manhole shall be a separate pay item. Repairs to existing manholes shall be a separate pay item when authorized.

2. Holiday Testing: Inspect each sanitary sewer manhole using high-voltage holiday detection equipment. All detected holidays shall be marked and repaired by abrading the coating surface with grit disk paper, or other hand tooling method. After abrading and cleaning, additional protective coating material shall be applied to the repair area. All touch-up repair procedures shall follow the protective coating manufacturer's recommendations.

If a sanitary sewer manhole fails to pass one of the above tests, it shall be repaired in accordance with the manufacturer's recommendations and re-tested. It shall not be accepted until it passes all tests. All repairs and re-testing shall be at no additional cost to SAWS.

855.6 **MEASUREMENT:** All reconstructed manholes will be measured by the unit of each manhole (any type or size) regardless of the type shown in the contract documents.

855.7 **PAYMENT:** The work performed as prescribed by this item will be paid for at the contract unit price bid per manhole for "Reconstruction of Existing Manholes," which price shall be full compensation for all excavation, backfill material including select backfill, flowable fill, saw cutting of surfaces as required, reinforced concrete/concrete, diversion of flow, bypass pumping, trench protection, special shoring and disposal of material excavated, sewer coating, and testing; for furnishing and placing all materials and for all labor, tools, equipment and incidentals necessary to complete the work.

- End of specification -

City of San Antonio

TRANSPORTATION AND CAPITAL IMPROVEMENTS

RECEIPT OF ADDENDUM NUMBER(S) 2 IS HEREBY ACKNOWLEDGED FOR THE PROJECT: **Wilson Boulevard (Club to Donaldson Ave.) & Thespian Island- ID NO.: 40-00322** FOR WHICH PROPOSAL WILL BE OPENED AND READ ALOUD ON: **Tuesday, April 21, 2015**

*****THIS ACKNOWLEDGEMENT MUST BE SIGNED AND RETURNED WITH THE PROPOSAL PACKAGE.*****

Company Name: _____

Address: _____

City/State/Zip Code: _____

Date: _____

_____
Signature

_____
Print Name/Title

Addendum No. 2