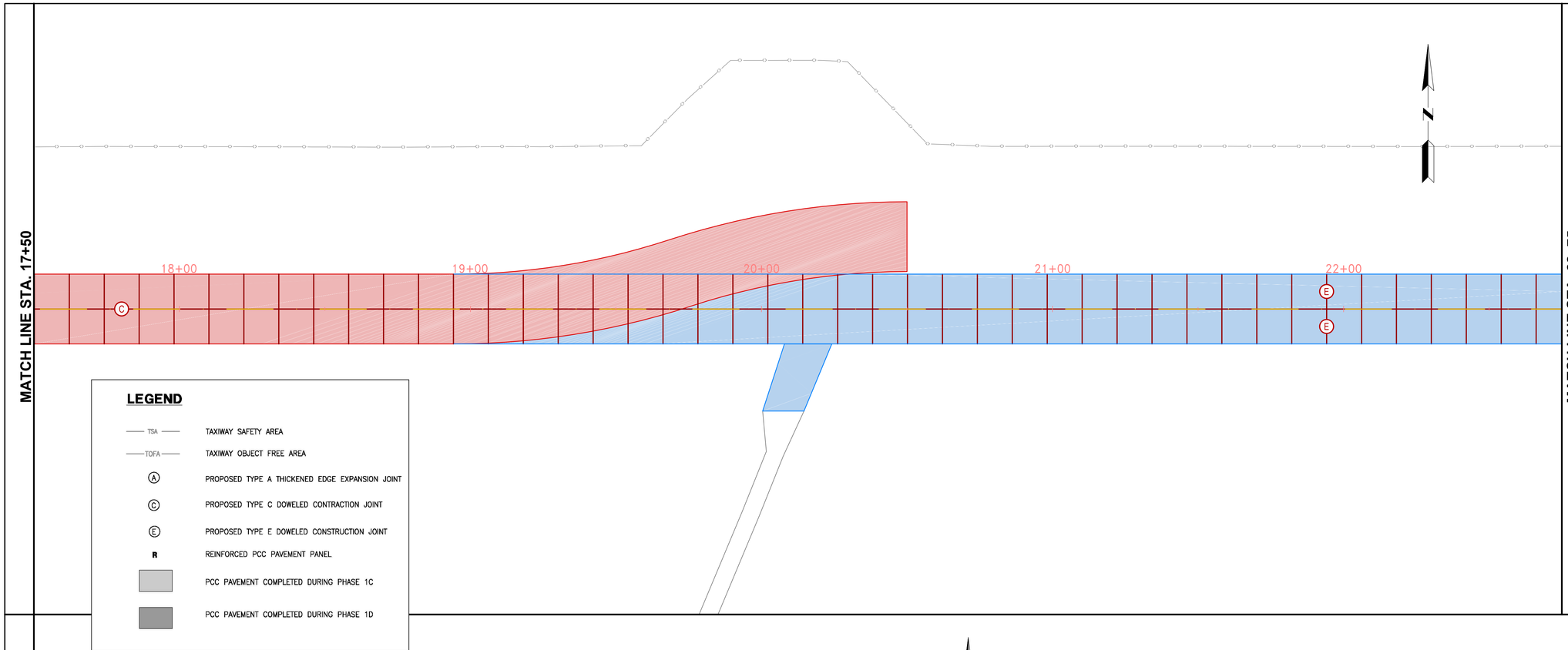

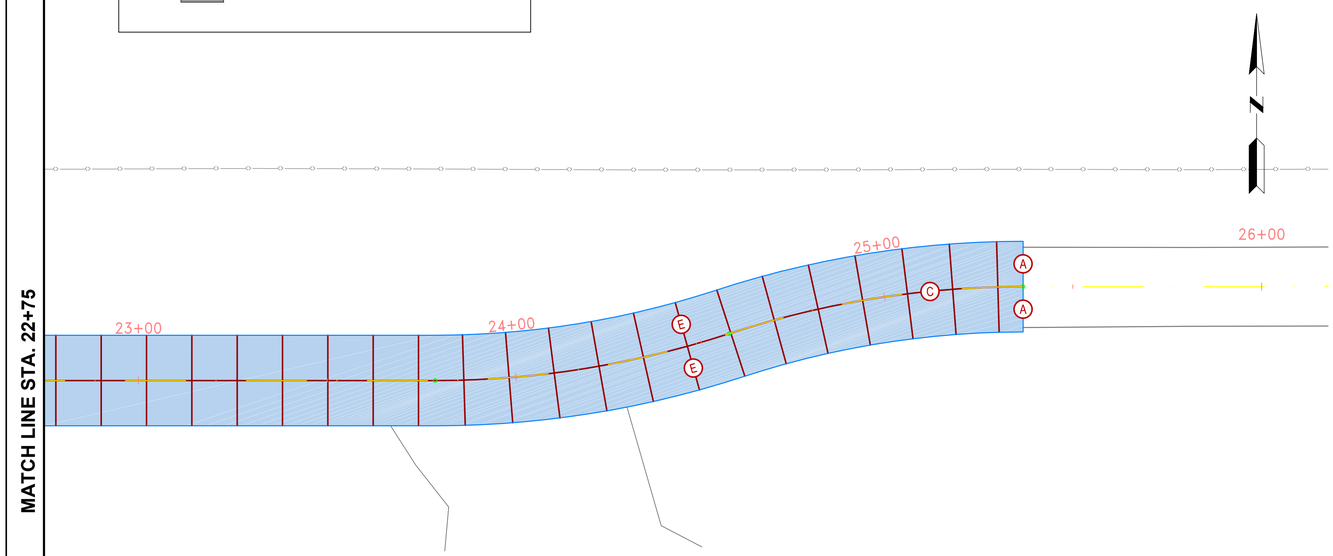

GRAPHIC SCALE

0 10 20 40

(IN FEET)

RS&H

RS&H, Inc.
13750 SAN PEDRO AVE, SUITE 300
SAN ANTONIO, TX 78232
(210) 224-2800 FAX (210) 545-3103
WWW.RSANDH.COM
REGISTERED FIRM NO: F-3401

SAN ANTONIO INTERNATIONAL AIRPORT
SAN ANTONIO, TEXAS

PERIMETER ROAD IMPROVEMENTS

CONSULTANTS

ATKINS
15900 La Cantera Parkway, Suite 26200
San Antonio, TX 78256
Phone: 210.828.9494

STATE OF TEXAS
STEVEN D. TEMPLER
86656
PROFESSIONAL ENGINEER

$DATE$

REVISIONS

NO.	DESCRIPTION	DATE

DATE ISSUED: 04-28-16
REVIEWED BY:
DRAWN BY:
DESIGNED BY:

AEP PROJECT NUMBER
000-0000-000

© 2016 RS&H, INC.

SHEET TITLE

JOINT LAYOUT PLAN - SHEET 2

SHEET NUMBER

C402

100% BID SET

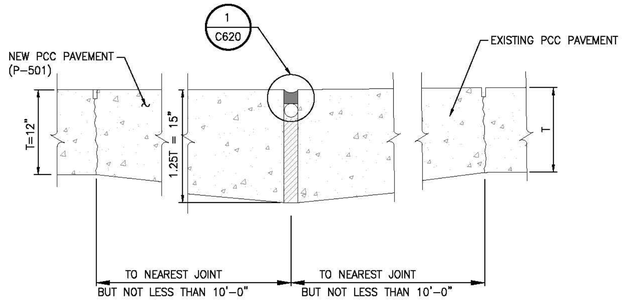

A TYPE A THICKENED EDGE EXPANSION JOINT DETAIL

SCALE: NTS

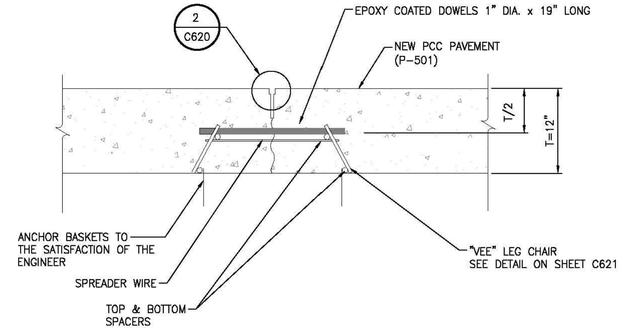

C TYPE C DOWELED CONTRACTION JOINT DETAIL

SCALE: NTS

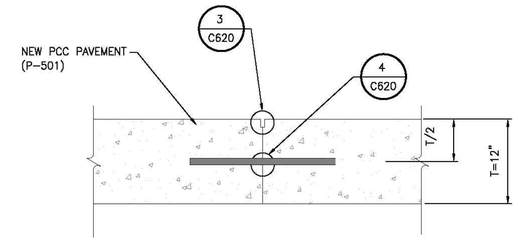

E TYPE E DOWELED CONSTRUCTION JOINT DETAIL

SCALE: NTS

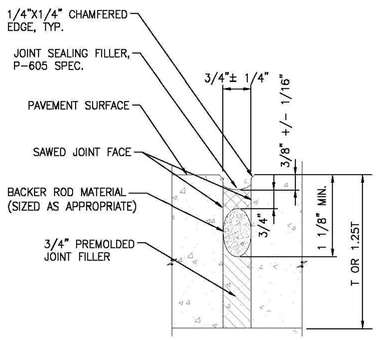

1 C620 EXPANSION JOINT

SCALE: NTS

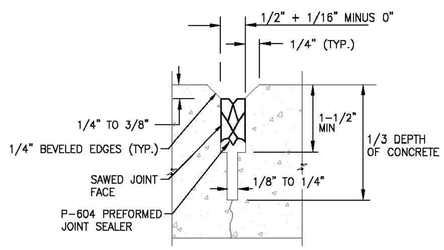

2 C620 CONTRACTION JOINT

SCALE: NTS

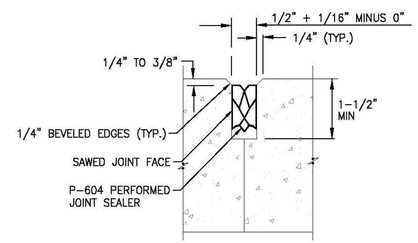

3 C620 CONSTRUCTION JOINT

SCALE: NTS

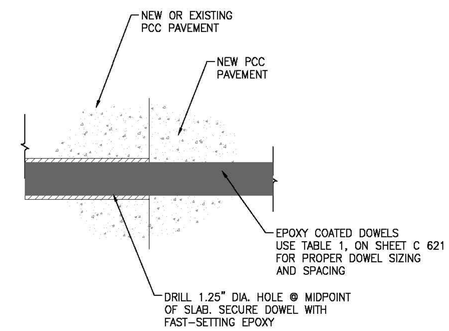

4 C620 DOWEL DETAIL

SCALE: NTS

NOTES:

1. ALL DOWELS USED FOR THIS PROJECT SHALL BE EPOXY COATED.
2. ALL MATERIALS AND WORK ASSOCIATED WITH NEW OR EXISTING JOINTS IS INCIDENTAL TO P-501.

RS&H

RS&H, Inc.
13750 SAN PEDRO AVE, SUITE 300
SAN ANTONIO, TX 78232
(210) 224-2800 FAX (210) 545-3103
WWW.RSANDH.COM
REGISTERED FIRM NO: F-3401

SAN ANTONIO
INTERNATIONAL AIRPORT
SAN ANTONIO, TEXAS

PERIMETER ROAD
IMPROVEMENTS

CONSULTANTS

ATKINS
15900 La Cantera Parkway, Suite 26200
San Antonio, TX 78256
Phone: 210.828.9494

STATE OF TEXAS
STEVEN D. TEMPLER
88656
PROFESSIONAL ENGINEER

$DATE$

REVISIONS

NO.	DESCRIPTION	DATE

DATE ISSUED: 04-28-16
REVIEWED BY:
DRAWN BY:
DESIGNED BY:

AEP PROJECT NUMBER
000-0000-000

© 2016 RS&H, INC.

SHEET TITLE

JOINT DETAILS - SHEET 1

SHEET NUMBER

C403

100% BID SET

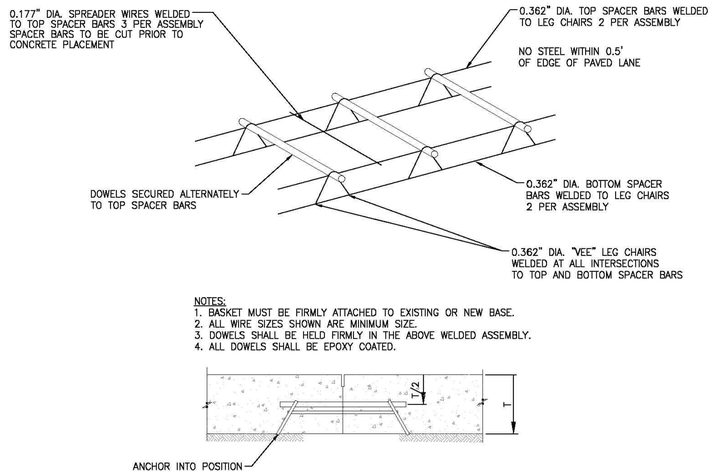

NOTES:
1. BASKET MUST BE FIRMLY ATTACHED TO EXISTING OR NEW BASE.
2. ALL WIRE SIZES SHOWN ARE MINIMUM SIZE.
3. DOWELS SHALL BE HELD FIRMLY IN THE ABOVE WELDED ASSEMBLY.
4. ALL DOWELS SHALL BE EPOXY COATED.

(1) FOR THIS PROJECT T=12" (APRON AND TAXIWAY CONNECTOR) AND T=8" (PERIMETER ROAD)

1 / C621 **TYPICAL DOWEL AND TIE BAR BASKET**
SCALE: NTS

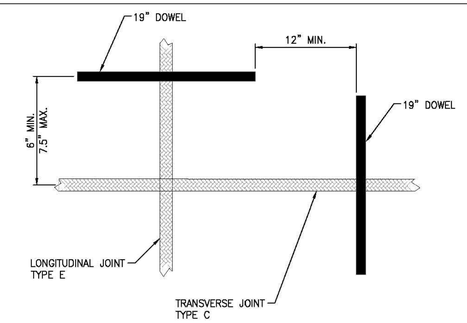

3 / C621 **POSITION OF DOWELS AT EDGE OF JOINT**
SCALE: NTS

DIMENSIONS AND SPACING OF STEEL DOWELS			
SLAB THICKNESS (T)	DIAMETER (d)	LENGTH (L)	SPACING
8"	1"	19"	12" O.C. MAX.
12"	1"	19"	12" O.C. MAX.

NOTES:
1. ALL DOWELS PLACED TO BE PARALLEL TO TOP OF PAVEMENT GRADES.
2. ALL DOWELS PLACED TO HAVE 50% OF LENGTH ACROSS JOINT LINES.
3. NO DOWELS SHALL BE PLACED MANUALLY IN PLASTIC CONCRETE.
4. ANY WELD ON DOWELS TO HAVE FIELD APPLIED EPOXY COATING APPLIED.
5. ALL DOWELS SHALL BE EPOXY COATED.

TABLE 1 - DIMENSIONS AND SPACING OF STEEL DOWELS

RS&H

RS&H, Inc.
13750 SAN PEDRO AVE, SUITE 300
SAN ANTONIO, TX 78232
(210) 224-2800 FAX (210) 545-3103
WWW.RSANDH.COM
REGISTERED FIRM NO: F-3401

SAN ANTONIO
INTERNATIONAL AIRPORT
SAN ANTONIO, TEXAS

PERIMETER ROAD IMPROVEMENTS

CONSULTANTS

ATKINS
15900 La Cantera Parkway, Suite 26200
San Antonio, TX 78256
Phone: 210.828.9494

STATE OF TEXAS
STEVEN D. TEMPLER
88656
PROFESSIONAL ENGINEER

$DATE$

REVISIONS

NO.	DESCRIPTION	DATE

DATE ISSUED: 04-28-16
REVIEWED BY:
DRAWN BY:
DESIGNED BY:

AEP PROJECT NUMBER
000-0000-000

© 2016 RS&H, INC.

SHEET TITLE

JOINT DETAILS - SHEET 2

SHEET NUMBER

C404

100% BID SET

TABLE OF VARIABLE DIMENSIONS AND QUANTITIES FOR ONE HEADWALL (4)

SLOPE	DIA OF PIPE, D	Values for one Pipe: W	X	Y	L	Reinf (Lbs)	Conc (CY) (1)	Values to be added for each addt'l Pipe: X and W	Reinf (Lbs)	Conc (CY) (1)
2:1	12"	7'- 7 3/4"	4'- 3"	2'-10"	5'- 8"	115	0.9	2'- 5 3/4"	26	0.3
	15"	8'-10 1/2"	4'- 7 1/4"	3'- 4"	6'- 8"	131	1.1	3'- 0 3/4"	32	0.4
	18"	10'- 1 1/4"	4'-11 1/2"	3'-10"	7'- 8"	163	1.3	3'- 9 1/4"	48	0.5
	21"	11'- 3 3/4"	5'- 3 3/4"	4'- 4"	8'- 8"	181	1.6	4'- 4 1/4"	54	0.6
	24"	12'- 6 1/2"	5'- 8"	4'-10"	9'- 8"	208	1.8	5'- 0 3/4"	67	0.8
	27"	13'- 9"	6'- 0 1/4"	5'- 4"	10'- 8"	225	2.1	5'- 6 1/2"	73	0.9
	30"	14'-11 3/4"	6'- 4 1/2"	5'-10"	11'- 8"	259	2.5	6'- 1 1/2"	86	1.1
	33"	16'- 3"	6'- 9 1/2"	6'- 4"	12'- 8"	284	2.8	6'- 7 1/4"	92	1.2
	36"	17'- 6 1/4"	7'- 2 1/4"	6'-10"	13'- 8"	316	3.2	7'- 2 1/4"	107	1.4
	42"	20'- 1"	8'- 0 1/4"	7'-10"	15'- 8"	383	4.0	8'- 3"	138	1.8
	48"	23'- 6"	8'-10 1/4"	9'- 4"	18'- 8"	468	5.4	9'- 3 3/4"	167	2.4
	54"	26'- 0 3/4"	9'- 8"	10'- 4"	20'- 8"	549	6.4	10'- 7 1/4"	198	3.0
	60"	28'- 7 1/2"	10'- 6"	11'- 4"	22'- 8"	620	7.5	11'- 8"	243	3.6
	66"	31'- 2 1/4"	11'- 3 3/4"	12'- 4"	24'- 8"	710	8.8	12'- 4 1/2"	269	4.0
	72"	33'- 8 3/4"	12'- 1 3/4"	13'- 4"	26'- 8"	789	10.1	13'- 2 1/2"	303	4.6
3:1	12"	10'- 1 1/4"	4'- 3"	4'- 3"	8'- 6"	154	1.3	2'- 5 3/4"	28	0.3
	15"	11'- 9 1/4"	4'- 7 1/4"	5'- 0"	10'- 0"	184	1.6	3'- 0 3/4"	37	0.5
	18"	13'- 5"	4'-11 1/2"	5'- 9"	11'- 6"	225	2.0	3'- 9 1/4"	55	0.6
	21"	15'- 0 3/4"	5'- 3 3/4"	6'- 6"	13'- 0"	254	2.4	4'- 4 1/4"	62	0.8
	24"	16'- 8 3/4"	5'- 8"	7'- 3"	14'- 6"	291	2.8	5'- 0 3/4"	77	1.0
	27"	18'- 4 1/2"	6'- 0 1/4"	8'- 0"	16'- 0"	329	3.3	5'- 6 1/2"	88	1.2
	30"	20'- 0 1/4"	6'- 4 1/2"	8'- 9"	17'- 6"	377	3.9	6'- 1 1/2"	103	1.4
	33"	21'- 8 3/4"	6'- 9 1/2"	9'- 6"	19'- 0"	413	4.4	6'- 7 1/4"	111	1.6
	36"	23'- 5 1/2"	7'- 2 1/4"	10'- 3"	20'- 6"	462	5.1	7'- 2 1/4"	126	1.9
	42"	26'-10 1/2"	8'- 0 1/4"	11'- 9"	23'- 6"	571	6.4	8'- 3"	168	2.4
	48"	31'- 7 1/4"	8'-10 1/4"	14'- 0"	28'- 0"	712	8.7	9'- 3 3/4"	210	3.2
	54"	35'- 0 1/4"	9'- 8"	15'- 6"	31'- 0"	830	10.5	10'- 7 1/4"	249	4.0
	60"	38'- 5 1/4"	10'- 6"	17'- 0"	34'- 0"	954	12.4	11'- 8"	306	4.8
	66"	41'-10 1/4"	11'- 3 3/4"	18'- 6"	37'- 0"	1092	14.5	12'- 4 1/2"	338	5.5
4:1	12"	12'- 6 3/4"	4'- 3"	5'- 8"	11'- 4"	203	1.7	2'- 5 3/4"	32	0.4
	15"	14'- 7 3/4"	4'- 7 1/4"	6'- 8"	13'- 4"	242	2.2	3'- 0 3/4"	43	0.6
	18"	16'- 8 3/4"	4'-11 1/2"	7'- 8"	15'- 4"	296	2.8	3'- 9 1/4"	61	0.8
	21"	18'- 9 3/4"	5'- 3 3/4"	8'- 8"	17'- 4"	343	3.4	4'- 4 1/4"	73	1.0
	24"	20'-10 3/4"	5'- 8"	9'- 8"	19'- 4"	394	4.0	5'- 0 3/4"	90	1.3
	27"	23'- 0"	6'- 0 1/4"	10'- 8"	21'- 4"	445	4.8	5'- 6 1/2"	103	1.5
	30"	25'- 1"	6'- 4 1/2"	11'- 8"	23'- 4"	510	5.5	6'- 1 1/2"	120	1.8
	33"	27'- 2 3/4"	6'- 9 1/2"	12'- 8"	25'- 4"	572	6.4	6'- 7 1/4"	134	2.0
	36"	29'- 4 1/2"	7'- 2 1/4"	13'- 8"	27'- 4"	631	7.3	7'- 2 1/4"	152	2.4
	42"	33'- 8"	8'- 0 1/4"	15'- 8"	31'- 4"	781	9.4	8'- 3"	198	3.0
	48"	39'- 8"	8'-10 1/4"	18'- 8"	37'- 4"	991	12.8	9'- 3 3/4"	255	4.0
6:1	12"	17'- 5 3/4"	4'- 3"	8'- 6"	17'- 0"	295	2.9	2'- 5 3/4"	38	0.5
	15"	20'- 5"	4'- 7 1/4"	10'- 0"	20'- 0"	367	3.7	3'- 0 3/4"	51	0.8
	18"	23'- 4 1/2"	4'-11 1/2"	11'- 6"	23'- 0"	445	4.7	3'- 9 1/4"	73	1.0
	21"	26'- 4"	5'- 3 3/4"	13'- 0"	26'- 0"	531	5.8	4'- 4 1/4"	89	1.3
	24"	29'- 3 1/4"	5'- 8"	14'- 6"	29'- 0"	605	7.0	5'- 0 3/4"	110	1.7
	27"	32'- 2 3/4"	6'- 0 1/4"	16'- 0"	32'- 0"	702	8.3	5'- 6 1/2"	129	2.0
	30"	35'- 2 1/4"	6'- 4 1/2"	17'- 6"	35'- 0"	801	9.7	6'- 1 1/2"	150	2.4
	33"	38'- 2 1/4"	6'- 9 1/2"	19'- 0"	38'- 0"	913	11.3	6'- 7 1/4"	170	2.8

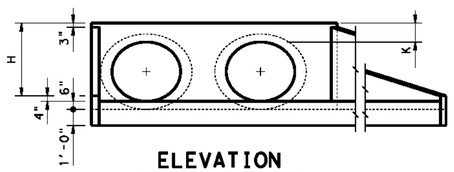

ELEVATION

Showing dimensions

(1) Quantities shown are for concrete pipe and will increase slightly for metal pipe installations.

(2) For vehicle safety, curbs shall project no more than 3" above finished grade. Curb heights shall be reduced, if necessary, to meet these requirements. No changes will be made in quantities and no additional compensation will be allowed for this work.

(3) Provide a 1'-0" footing as shown where required to maintain 4" Min cover for pipes.

(4) Quantities shown are for one structure end only (one headwall).

(5) Min Length = 6" + 3" x $\left(\frac{12 \times H - 7}{12 \times L}\right)$

Max Length = 12 x H - 3" x $\left(\frac{12 \times H - 7}{12 \times L}\right)$ - 1"

(6) Lengths of wings based on SL:1 Slope along this line.

TABLE OF REINFORCING STEEL (4)

Bar	Size	Spa	No.
A	# 4	1'-0"	~
B	# 3	1'-6"	~
CL	# 4	1'-0"	~
CS	# 4	1'-0"	~
D	# 3	1'-0"	~
E	# 5	~	4
F	# 5	~	~
G	# 3	~	2
SL	# 4	~	3
SS	# 4	~	3
V	# 4	1'-0"	~
WL	# 5	~	2
WS	# 5	~	2

TABLE OF CONSTANT DIMENSIONS

DIA OF PIPE, D	G	K	H
12"	9"	1'- 0"	2'- 0"
15"	11"	1'- 0"	2'- 3"
18"	1'- 2"	1'- 0"	2'- 6"
21"	1'- 4"	1'- 0"	2'- 9"
24"	1'- 7"	1'- 0"	3'- 0"
27"	1'- 8"	1'- 0"	3'- 3"
30"	1'-10"	1'- 0"	3'- 6"
33"	1'-11"	1'- 0"	3'- 9"
36"	2'- 1"	1'- 0"	4'- 0"
42"	2'- 4"	1'- 0"	4'- 6"
48"	2'- 7"	1'- 3"	5'- 3"
54"	3'- 0"	1'- 3"	5'- 9"
60"	3'- 3"	1'- 3"	6'- 3"
66"	3'- 3"	1'- 3"	6'- 9"
72"	3'- 4"	1'- 3"	7'- 3"

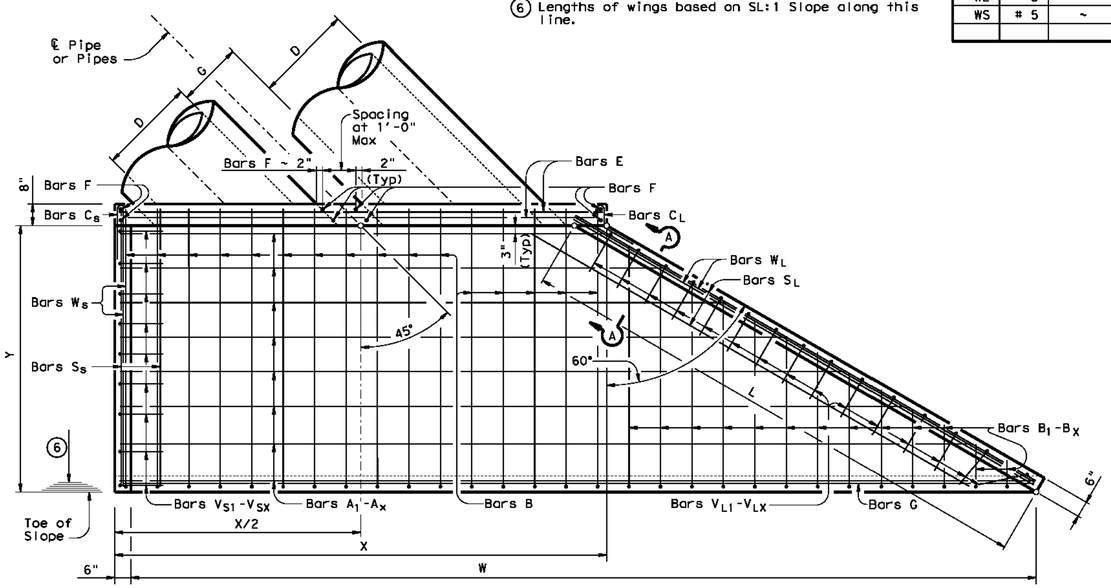

PLAN

GENERAL NOTES:

Designed according to AASHTO LRFD Specifications.

Reinforcing steel shall be placed with the center of the outside layer of bars 2" from the surface of the concrete.

All reinforcing steel shall be Grade 60.

All concrete shall be Class "C" and shall have a minimum compressive strength of 3600 psi.

No bridge rails of any type may be mounted directly to these culvert headwalls.

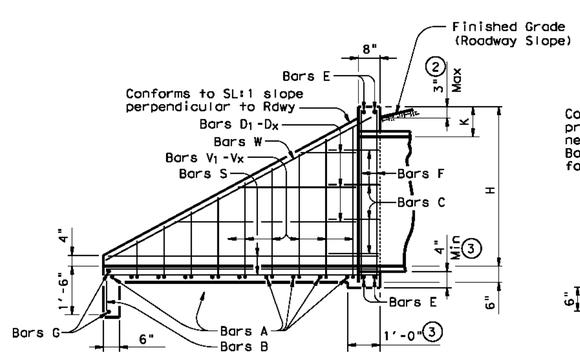

TYPICAL WING ELEVATION

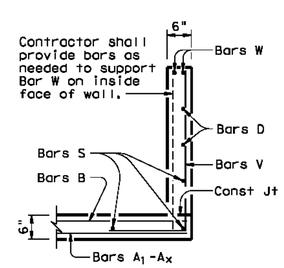

SECTION A-A

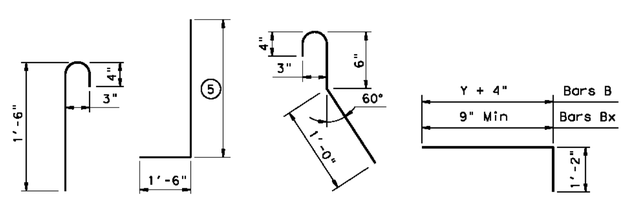

BARS C_S (2'-0" long) | BARS V_S & V_L | BARS C_L (2'-0" long) | BARS B & B_1-B_X

DISCLAIMER:
The use of this standard is governed by the "Texas Engineering Practice Act". No warranty of any kind is made by TxDOT for any purpose whatsoever. TxDOT assumes no responsibility for the conversion of this standard to other formats or for incorrect results or damages resulting from its use.

DATE:
FILE:

Texas Department of Transportation — Bridge Division Standard

CONCRETE HEADWALLS WITH FLARED WINGS FOR 45° SKEW PIPE CULVERTS

CH-FW-45

FILE: chfw45se.dgn	DN: TxDOT	CK: TxDOT	DW: TxDOT	CK: GAF
©TxDOT February 2010	CONT	SECT	JOB	HIGHWAY
REVISIONS				
	DIST	COUNTY		SHEET NO.

RS&H

RS&H, Inc.
13750 SAN PEDRO AVE, SUITE 300
SAN ANTONIO, TX 78232
(210) 224-2800 FAX (210) 545-3103
WWW.RSANDH.COM
REGISTERED FIRM NO: F-3401

SAN ANTONIO INTERNATIONAL AIRPORT
SAN ANTONIO, TEXAS

PERIMETER ROAD IMPROVEMENTS

CONSULTANTS

ATKINS
15900 La Cantera Parkway, Suite 26200
San Antonio, TX 78256
Phone: 210.828.9494

STATE OF TEXAS — STEVEN D. TEMPLER — 68656 — PROFESSIONAL ENGINEER

$DATE$

REVISIONS

NO.	DESCRIPTION	DATE

DATE ISSUED: 04-28-16
REVIEWED BY:
DRAWN BY:
DESIGNED BY:

AEP PROJECT NUMBER
000-0000-000

©2016 RS&H, INC.

SHEET TITLE

DRAINAGE DETAILS - SHEET 1

SHEET NUMBER

C501

100% BID SET

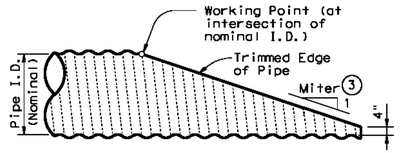

NOTE: All Pipe Runners, calculations, and dimensions are based on the pipe culverts mitered as shown in this detail. Alternate styles of mitered ends will require that appropriate adjustments be made to the values presented on this standard.

SIDE ELEVATION OF TYPICAL PIPE CULVERT MITER

(Showing Corrugated Metal Pipe Culvert. Details of Concrete Pipe Culvert are similar.)

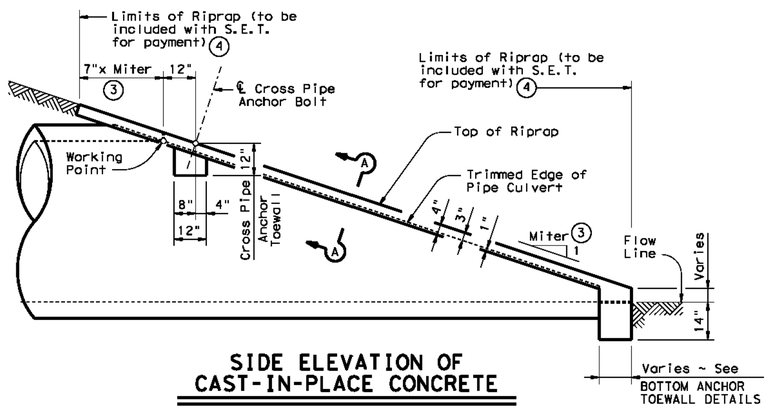

SIDE ELEVATION OF CAST-IN-PLACE CONCRETE

(Showing Concrete Pipe Culvert. Details of Corrugated Metal Pipe Culvert are similar. Pipe Runners not shown for clarity)

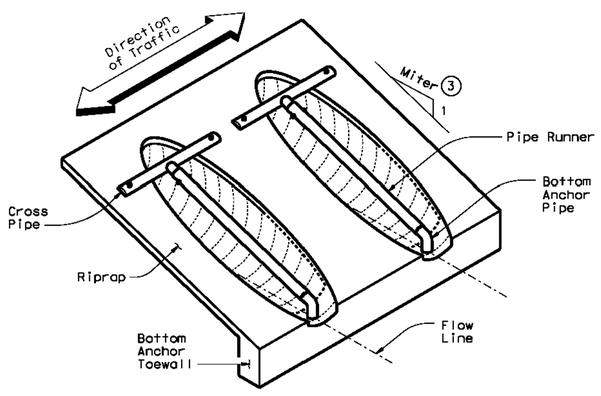

ISOMETRIC VIEW OF TYPICAL INSTALLATION

(Showing installation with no skew.)

CROSS PIPE LENGTHS & PIPE RUNNER LENGTHS 1 2

Nominal Culvert I.D.	Pipe Culvert Spa ~ G	Cross Pipe Length	Pipe Runner Length											
			3:1 Side Slope				4:1 Side Slope				6:1 Side Slope			
			0° Skew	15° Skew	30° Skew	45° Skew	0° Skew	15° Skew	30° Skew	45° Skew	0° Skew	15° Skew	30° Skew	45° Skew
24"	1'- 7"	3'- 5"	N/A	N/A	N/A	5'-10"	N/A	N/A	N/A	8'- 1"	N/A	N/A	N/A	12'- 9"
27"	1'- 8"	3'- 8"	N/A	N/A	5'- 5"	6'-11"	N/A	N/A	7'- 7"	9'- 7"	N/A	N/A	11'-11"	14'-11"
30"	1'-10"	3'-11"	N/A	N/A	6'- 4"	8'- 0"	N/A	N/A	8'- 9"	11'- 0"	N/A	N/A	13'- 8"	17'- 0"
33"	1'-11"	4'- 2"	6'- 2"	6'- 5"	7'- 3"	9'- 1"	8'- 6"	8'-10"	10'- 0"	12'- 5"	13'- 3"	13'- 9"	15'- 5"	19'- 2"
36"	2'- 1"	4'- 5"	6'-11"	7'- 3"	8'- 2"	10'- 2"	9'- 6"	9'-11"	11'- 2"	13'-10"	14'- 9"	15'- 3"	17'- 2"	21'- 3"
42"	2'- 4"	4'-11"	8'- 6"	8'-10"	9'-11"	12'- 4"	11'- 7"	12'- 0"	13'- 6"	16'- 8"	17'- 9"	18'- 5"	20'- 8"	25'- 7"
48"	2'- 7"	5'- 5"	10'- 1"	10'- 5"	11'- 9"	N/A	13'- 7"	14'- 2"	15'-10"	N/A	20'- 9"	21'- 6"	24'- 2"	N/A
54"	3'- 0"	5'-11"	11'- 8"	12'- 1"	N/A	N/A	15'- 8"	16'- 3"	N/A	N/A	23'-10"	24'- 8"	N/A	N/A
60"	3'- 3"	6'- 5"	13'- 3"	N/A	N/A	N/A	17'- 9"	N/A	N/A	N/A	26'-10"	N/A	N/A	N/A

TYPICAL PIPE CULVERT MITERS 3

Side Slope	0° Skew	15° Skew	30° Skew	45° Skew
3:1	3:1	3.106:1	3.464:1	4.243:1
4:1	4:1	4.141:1	4.619:1	5.657:1
6:1	6:1	6.212:1	6.928:1	8.485:1

CONDITIONS WHERE PIPE RUNNERS ARE NOT REQUIRED 2

Nominal Culvert I.D.	Single Pipe Culvert	Multiple Pipe Culverts
12" thru 21"	Skews thru 45°	Skews thru 45°
24"	Skews thru 45°	Skews thru 30°
27"	Skews thru 30°	Skews thru 15°
30"	Skews thru 15°	Skews thru 15°
33"	Skews thru 15°	Always required
36"	Normal (No Skew)	Always required
42" to 60"	Always required	Always required

STANDARD PIPE SIZES & MAX PIPE RUNNER LENGTHS 1

Pipe Size	Pipe O.D.	Pipe I.D.	Max Pipe Runner Length
2" STD	2.375"	2.067"	N/A
3" STD	3.500"	3.068"	10'- 0"
4" STD	4.500"	4.026"	19'- 8"
5" STD	5.563"	5.047"	34'- 2"

ESTIMATED CONCRETE RIPRAP QUANTITIES (CY) 5

Nominal Culvert I.D.	3:1 Side Slope				4:1 Side Slope				6:1 Side Slope			
	0° Skew	15° Skew	30° Skew	45° Skew	0° Skew	15° Skew	30° Skew	45° Skew	0° Skew	15° Skew	30° Skew	45° Skew
12"	0.4	0.4	0.5	0.5	0.5	0.5	0.5	0.6	0.7	0.7	0.7	0.8
15"	0.5	0.5	0.5	0.6	0.6	0.6	0.6	0.7	0.7	0.7	0.8	0.9
18"	0.5	0.5	0.6	0.6	0.6	0.7	0.7	0.8	0.8	0.8	0.9	1.0
21"	0.6	0.6	0.6	0.7	0.7	0.7	0.8	0.9	0.9	0.9	1.0	1.2
24"	0.6	0.7	0.7	0.8	0.8	0.8	0.8	1.0	1.0	1.0	1.1	1.3
27"	0.7	0.7	0.8	0.9	0.8	0.9	0.9	1.1	1.1	1.1	1.2	1.4
30"	0.8	0.8	0.8	0.9	0.9	0.9	1.0	1.2	1.2	1.2	1.3	1.6
33"	0.8	0.8	0.9	1.0	1.0	1.0	1.1	1.3	1.3	1.4	1.5	1.7
36"	0.9	0.9	0.9	1.1	1.1	1.1	1.2	1.4	1.4	1.5	1.6	1.8
42"	1.0	1.0	1.1	1.3	1.2	1.3	1.3	1.6	1.6	1.7	1.8	2.1
48"	1.1	1.1	1.2	N/A	1.4	1.4	1.5	N/A	1.9	1.9	2.1	N/A
54"	1.3	1.3	N/A	N/A	1.6	1.6	N/A	N/A	2.1	2.1	N/A	N/A
60"	1.4	N/A	N/A	N/A	1.7	N/A	N/A	N/A	2.3	N/A	N/A	N/A

1. Size of Pipe Runner shall be as shown in the tables. Cross Pipe shall be the same size as the Pipe Runner. Cross Pipe Stub Out and Bottom Anchor Pipe shall be the next smaller size pipe as shown in the STANDARD PIPE SIZES table.
2. This standard allows for the placement of only one pipe runner across each culvert pipe opening. In order to limit the clear opening to be traversed by an errant vehicle, the following conditions must be met:

   For 60" culvert pipes, the skew must not exceed 0°.
   For 54" culvert pipes, the skew must not exceed 15°.
   For 48" culvert pipes, the skew must not exceed 30°.
   For all culvert pipe sizes 42" and less, the skew must not exceed 45°.

   If the above conditions cannot be met, the designer should consider using a safety end treatment with flared wings. For further information, refer to the TxDOT "Roadway Design Manual".
3. Miter = Slope of Mitered Pipe Culvert End
4. Riprap placed beyond the limits shown will be paid as Concrete Riprap in accordance with Item 432, "Riprap".
5. Quantities shown are for one end of one reinforced Concrete Pipe Culvert. For multiple Pipe Culverts or for Corrugated Metal Pipe Culverts, quantities will need to be adjusted. Riprap quantities are for Contractor's information only.

SHEET 1 OF 2

Texas Department of Transportation — Bridge Division Standard

SAFETY END TREATMENT

FOR 12" DIA TO 60" DIA PIPE CULVERTS TYPE II ~ CROSS DRAINAGE

SETP-CD

FILE: setpcdse.dgn	DN: GAF	CK: CAT	DW: JRP	CK: GAF
©TxDOT February 2010	CONT	SECT	JOB	HIGHWAY
REVISIONS 11-10: Add note for synthetic fibers.	DIST		COUNTY	SHEET NO.

DISCLAIMER: The use of this standard is governed by the "Texas Engineering Practice Act". No warranty of any kind is made by TxDOT for any purpose whatsoever. TxDOT assumes no responsibility for the conversion of this standard to other formats or for incorrect results or damages resulting from its use.

DATE:
FILE:

RS&H

RS&H, Inc.
13750 SAN PEDRO AVE, SUITE 300
SAN ANTONIO, TX 78232
(210) 224-2800 FAX (210) 545-3103
WWW.RSANDH.COM
REGISTERED FIRM NO: F-3401

SAN ANTONIO INTERNATIONAL AIRPORT
SAN ANTONIO, TEXAS

PERIMETER ROAD IMPROVEMENTS

CONSULTANTS

ATKINS
15900 La Cantera Parkway, Suite 26200
San Antonio, TX 78256
Phone: 210.828.9494

STATE OF TEXAS — STEVEN D. TEMPLER — 68656 — PROFESSIONAL ENGINEER

$DATE$

REVISIONS

NO.	DESCRIPTION	DATE

DATE ISSUED: 04-28-16
REVIEWED BY:
DRAWN BY:
DESIGNED BY:

AEP PROJECT NUMBER
000-0000-000

© 2016 RS&H, INC.

SHEET TITLE

DRAINAGE DETAILS - SHEET 2

SHEET NUMBER

C502

100% BID SET

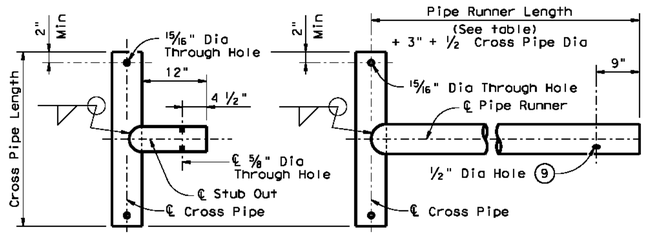

OPTION A1 OPTION A2

CROSS PIPE AND CONNECTIONS DETAILS

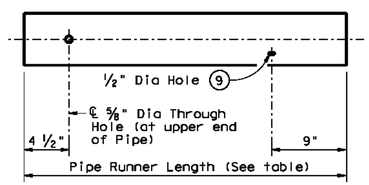

NOTE: The separate Pipe Runner shown is required when Cross Pipe Connection Option A1 is used.

PIPE RUNNER DETAILS

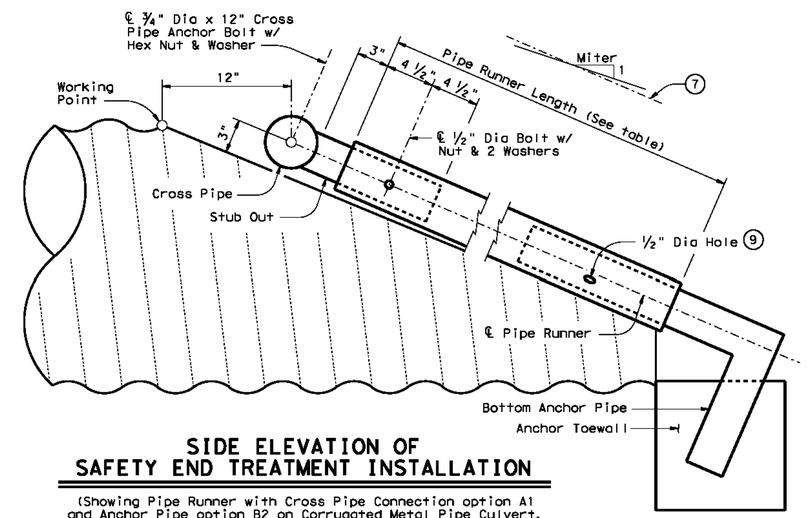

SIDE ELEVATION OF SAFETY END TREATMENT INSTALLATION

(Showing Pipe Runner with Cross Pipe Connection option A1 and Anchor Pipe option B2 on Corrugated Metal Pipe Culvert. Concrete Pipe Culvert details are similar. Riprap not shown for clarity)

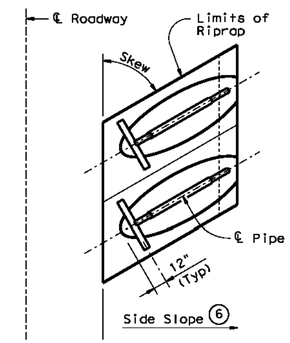

PLAN OF SKEWED INSTALLATION

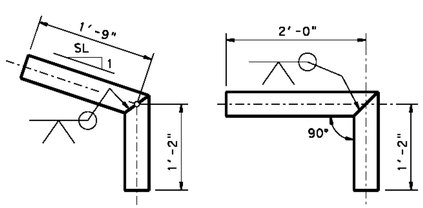

OPTION B1 OPTION B2

BOTTOM ANCHOR PIPE DETAILS (10)

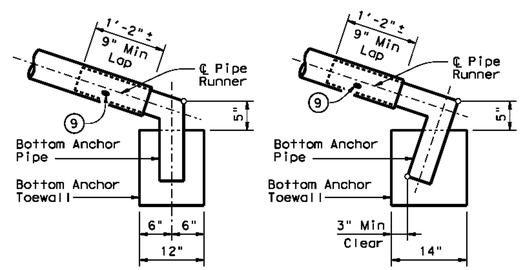

OPTION B1 OPTION B2

BOTTOM ANCHOR TOEWALL DETAILS

(Culvert & Riprap not shown for clarity)

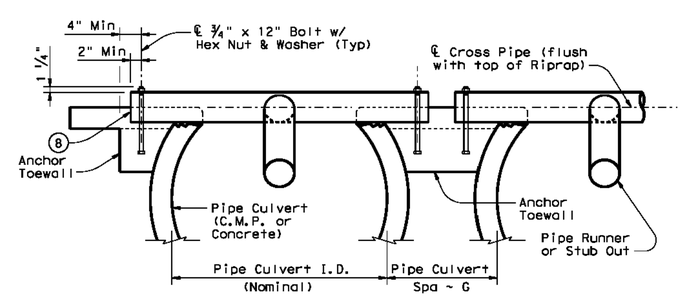

SHOWING CROSS PIPE & ANCHOR TOEWALL

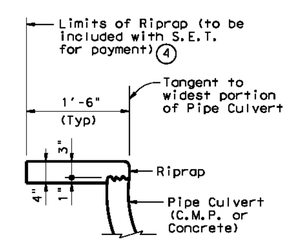

SHOWING TYPICAL PIPE CULVERT & RIPRAP

SECTION A-A

(4) Riprap placed beyond the limits shown will be paid as Concrete Riprap in accordance with Item 432, "Riprap".

(6) Recommended values of side slope are 3:1, 4:1, & 6:1. All quantities, calculations, and dimensions shown herein are based on these recommended values. Slope of 3:1 or flatter is required for vehicle safety.

(7) Note that actual slope of Pipe Runner may vary slightly from Side Slope of Riprap and trimmed Culvert Pipe edge.

(8) Care shall be taken to ensure that Riprap concrete does not flow into the Cross Pipe so as to permit disassembly of the bolted connection to allow cleanout access.

(9) After installation, the 1/2" hole shall be inspected to ensure that the lap of the Pipe Runner with the Bottom Anchor Pipe is adequate.

(10) At fabricator's option, a heat bend to a smooth 5" radius or a manufactured elbow (of the same material as the Runner) may be substituted for the mitered and welded joint in the Bottom Anchor Pipe.

GENERAL NOTES:

Pipe Runners are designed for a traversing load of 1,800 pounds at yield as recommended by Research Report 280-1, "Safety Treatment of Roadside Cross-Drainage Structures", Texas Transportation Institute, March 1981.

The Safety End Treatments shown herein are intended for use in those installations where out of control vehicles are likely to traverse the openings approximately perpendicular to the Pipe Runners.

Riprap and all necessary inverts shall be Concrete Riprap conforming to the requirements of Item 432, "Riprap".

Synthetic fibers listed on the "Fibers for Concrete" Material Producer List (MPL) may be used in lieu of steel reinforcing in riprap concrete unless noted otherwise.

Payment for riprap and toewall is included in the Price Bid for each Safety End Treatment.

Pipe Runners, Cross Pipes, and Anchor Pipes shall conform to the requirements of ASTM A53 (Type E or S, Grade B), ASTM A500 (Grade B), or API 5LX52.

Bolts and nuts shall conform to ASTM A307.

All steel components, except concrete reinforcing, shall be galvanized after fabrication. Galvanizing damaged during transport or construction shall be repaired in accordance with the specifications.

SHEET 2 OF 2

Texas Department of Transportation — Bridge Division Standard

SAFETY END TREATMENT

FOR 12" DIA TO 60" DIA PIPE CULVERTS TYPE II ~ CROSS DRAINAGE

SETP-CD

FILE: setpcdse.dgn	DN: GAF	CK: CAT	DW: JRP	CK: GAF
©TxDOT February 2010	CONT	SECT	JOB	HIGHWAY
REVISIONS				
11-10: Add note for synthetic fibers.	DIST	COUNTY		SHEET NO.

DISCLAIMER: The use of this standard is governed by the "Texas Engineering Practice Act". No warranty of any kind is made by TxDOT for any purpose whatsoever. TxDOT assumes no responsibility for the conversion of this standard to other formats or for incorrect results or damages resulting from its use.

DATE:
FILE:

RS&H

RS&H, Inc.
13750 SAN PEDRO AVE, SUITE 300
SAN ANTONIO, TX 78232
(210) 224-2800 FAX (210) 545-3103
WWW.RSANDH.COM
REGISTERED FIRM NO: F-3401

SAN ANTONIO INTERNATIONAL AIRPORT
SAN ANTONIO, TEXAS

PERIMETER ROAD IMPROVEMENTS

CONSULTANTS

ATKINS
15900 La Cantera Parkway, Suite 26200
San Antonio, TX 78256
Phone: 210.828.9494

STATE OF TEXAS — STEVEN D. TEMPLER — 88656 — PROFESSIONAL ENGINEER

$DATE$

REVISIONS

NO.	DESCRIPTION	DATE

DATE ISSUED: 04-28-16
REVIEWED BY:
DRAWN BY:
DESIGNED BY:

AEP PROJECT NUMBER
000-0000-000

© 2016 RS&H, INC.

SHEET TITLE

DRAINAGE DETAILS - SHEET 3

SHEET NUMBER

C503

100% BID SET

TABLE OF VARIABLE DIMENSIONS AND QUANTITIES FOR ONE HEADWALL (4)

SLOPE	DIA OF PIPE, D	Values for one pipe: W	X	Y	L	Reinf (Lbs)	Conc (CY) (1)	Values to be added for each addt'l pipe: X and W	Reinf (Lbs)	Conc (CY) (1)
3:1	24"	10'- 7 1/2"	4'- 7"	7'- 3"	10'- 3"	227	2.3	4'- 1 3/4"	65	0.9
	27"	11'- 8 1/2"	4'-11"	8'- 0"	11'- 3 3/4"	255	2.7	4'- 6 1/4"	75	1.0
	30"	12'- 9 1/2"	5'- 3"	8'- 9"	12'- 4 1/2"	298	3.1	5'- 0"	86	1.2
	33"	13'-10 3/4"	5'- 7"	9'- 6"	13'- 5 1/4"	322	3.5	5'- 4 3/4"	94	1.4
	36"	14'-11 3/4"	5'-11 1/4"	10'- 3"	14'- 6"	355	4.0	5'-10 1/2"	108	1.6
	42"	17'- 1 3/4"	6'- 7 1/4"	11'- 9"	16'- 7 1/2"	441	5.0	6'- 8 3/4"	133	2.1
	48"	20'- 0 3/4"	7'- 3 1/4"	14'- 0"	19'- 9 1/2"	542	6.6	7'- 7 1/4"	176	2.8
	54"	22'- 3"	7'-11 1/2"	15'- 6"	21'-11"	626	7.9	8'- 8"	211	3.5
	60"	24'- 5"	8'- 7 1/2"	17'- 0"	24'- 0 1/2"	725	9.4	9'- 6 1/4"	246	4.1
	66"	26'- 7"	9'- 3 1/2"	18'- 6"	26'- 2"	821	10.9	10'- 1 1/4"	274	4.6
	72"	28'- 9 1/4"	9'-11 3/4"	20'- 0"	28'- 3 1/2"	930	12.5	10'- 9 1/4"	309	5.3
4:1	24"	13'- 0 1/2"	4'- 7"	9'- 8"	13'- 8"	301	3.1	4'- 1 3/4"	75	1.1
	27"	14'- 4 1/2"	4'-11"	10'- 8"	15'- 1"	339	3.7	4'- 6 1/4"	87	1.3
	30"	15'- 8 1/2"	5'- 3"	11'- 8"	16'-6"	394	4.2	5'- 0"	99	1.5
	33"	17'- 0 3/4"	5'- 7"	12'- 8"	17'-11"	432	4.9	5'- 4 3/4"	112	1.7
	36"	18'- 4 3/4"	5'-11 1/4"	13'- 8"	19'- 4"	479	5.5	5'-10 1/2"	128	2.0
	42"	21'- 0 3/4"	6'- 7 1/4"	15'- 8"	22'- 1 3/4"	587	7.0	6'- 8 3/4"	158	2.6
	48"	24'- 8 3/4"	7'- 3 1/4"	18'- 8"	26'- 4 3/4"	738	9.4	7'- 7 1/4"	211	3.4
	54"	27'- 5"	7'-11 1/2"	20'- 8"	29'- 2 3/4"	871	11.3	8'- 8"	257	4.3
	60"	30'- 1"	8'- 7 1/2"	22'- 8"	32'- 0 3/4"	999	13.3	9'- 6 1/4"	297	5.1
	66"	32'- 9"	9'- 3 1/2"	24'- 8"	34'-10 1/2"	1139	15.6	10'- 1 1/4"	340	5.8
	72"	35'- 5 1/4"	9'-11 3/4"	26'- 8"	37'- 8 1/2"	1290	18.0	10'- 9 1/4"	378	6.6
6:1	24"	17'-10 1/2"	4'- 7"	14'- 6"	20'- 6"	450	5.1	4'- 1 3/4"	91	1.5
	27"	19'- 8 1/2"	4'-11"	16'- 0"	22'- 7 1/2"	519	6.0	4'- 6 1/4"	108	1.7
	30"	21'- 6 1/2"	5'- 3"	17'- 6"	24'- 9"	595	7.1	5'- 0"	124	2.0
	33"	23'- 4 3/4"	5'- 7"	19'- 0"	26'-10 1/2"	674	8.2	5'- 4 3/4"	143	2.4
	36"	25'- 2 3/4"	5'-11 1/4"	20'- 6"	29'- 0"	737	9.3	5'-10 1/2"	162	2.8
	42"	28'-10 3/4"	6'- 7 1/4"	23'- 6"	33'- 2 3/4"	920	11.9	6'- 8 3/4"	202	3.6
	48"	34'- 0 3/4"	7'- 3 1/4"	28'- 0"	39'- 7 1/4"	1189	16.2	7'- 7 1/4"	274	4.7

(1) Quantities shown are for concrete pipe and will increase slightly for Metal Pipe installation.

(2) For vehicle safety, curbs shall project no more than 3" above finished grade. Curb heights shall be reduced, if necessary, to meet these requirements. No changes will be made in quantities and no additional compensation will be allowed for this work.

(3) Provide a 1'-0" footing as shown where required to maintain 4" minimum cover for pipes.

(4) Quantities shown are for one structure end. (One headwall)

(5) Min Length = $6" + 3" \times \left(\frac{12 \times H - 7}{12 \times L}\right)$

Max Length = $12 \times H - 3" \times \left(\frac{12 \times H - 7}{12 \times L}\right) - 1"$

(6) Lengths of wings based on SL:1 Slope along this line.

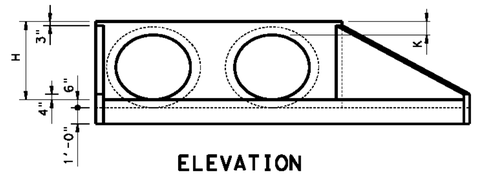

ELEVATION

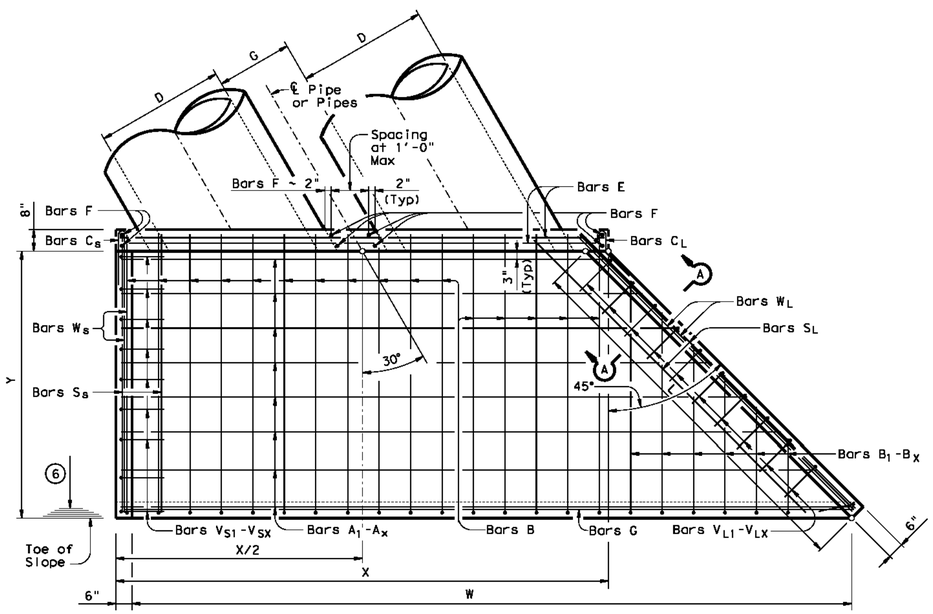

PLAN

TABLE OF (4) REINFORCING STEEL

Bar	Size	Spa	No.
A	# 4	1'-0"	~
B	# 3	1'-6"	~
CL	# 4	1'-0"	~
CS	# 4	1'-0"	~
D	# 3	1'-0"	~
E	# 5	~	4
F	# 5	~	~
G	# 3	~	2
SL	# 4	~	3
SS	# 4	~	3
V	# 4	1'-0"	~
WL	# 5	~	2
WS	# 5	~	2

TABLE OF CONSTANT DIMENSIONS

DIA OF PIPE, D	G	K	H
24"	1'- 7"	1'- 0"	3'- 0"
27"	1'- 8"	1'- 0"	3'- 3"
30"	1'-10"	1'- 0"	3'- 6"
33"	1'-11"	1'- 0"	3'- 9"
36"	2'- 1"	1'- 0"	4'- 0"
42"	2'- 4"	1'- 0"	4'- 6"
48"	2'- 7"	1'- 3"	5'- 3"
54"	3'- 0"	1'- 3"	5'- 9"
60"	3'- 3"	1'- 3"	6'- 3"
66"	3'- 3"	1'- 3"	6'- 9"
72"	3'- 4"	1'- 3"	7'- 3"

GENERAL NOTES:

Designed according to AASHTO LRFD Specifications.

The Safety End Treatment shown herein are intended for use in those installations where out of control vehicles are likely to traverse the openings approximately perpendicular to the pipe runners.

The Safety Pipe Runners are designed for a traversing load of 1,800 pounds at yield as recommended by Research Report 280-1, "Safety Treatment of Roadside Cross-Drainage Structures", Texas Transportation Institute, March 1981.

Reinforcing steel shall be placed with the center of the outside layer of bars 2" from the surface of the concrete.

All reinforcing steel shall be Grade 60.

All concrete shall be Class "C" and shall have a minimum compressive strength of 3600 psi.

All bolts, nuts, washers, brackets, angles and pipe runners are considered parts of the Safety End Treatment for payment.

Pipe Runners shall conform to the requirements of ASTM A53 (Type E or S, Grade B), ASTM A500 (Grade B), or API 5LX52.

Bolts and nuts shall conform to ASTM A307. Steel plates shall conform to ASTM A36. All steel components, except reinforcing, shall be galvanized. Galvanizing damaged during transport or construction shall be repaired in accordance with the specifications.

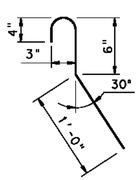

BARS C_L
(2'-0" long)

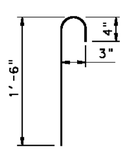

BARS C_S
(2'-0" long)

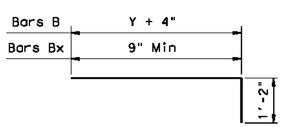

BARS B & B_1-B_X

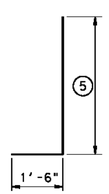

BARS V_S & V_L

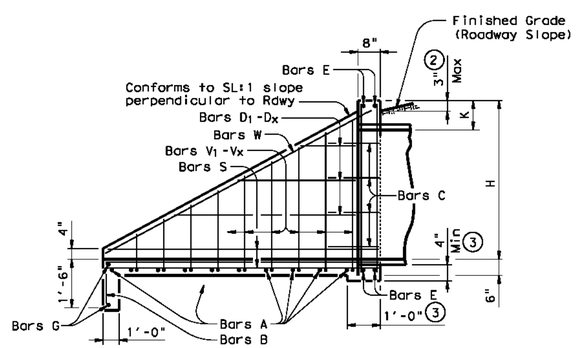

TYPICAL WING ELEVATION

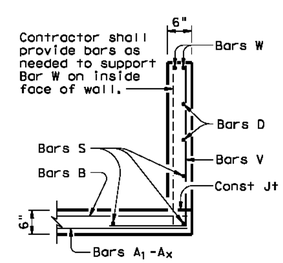

SECTION A-A

SHEET 1 OF 3

Texas Department of Transportation — Bridge Division Standard

SAFETY END TREATMENT WITH FLARED WINGS

FOR 30° SKEW PIPE CULVERTS
TYPE I ~ CROSS DRAINAGE

SETP-FW-30

FILE: stpf30se.dgn	DN: GAF	CK: CAT	DW: BWH	CK: GAF
©TxDOT February 2010	CONT	SECT	JOB	HIGHWAY
REVISIONS	DIST		COUNTY	SHEET NO.

DISCLAIMER: The use of this standard is governed by the "Texas Engineering Practice Act". No warranty of any kind is made by TxDOT for any purpose whatsoever. TxDOT assumes no responsibility for the conversion of this standard to other formats or for incorrect results or damages resulting from its use.

DATE:
FILE:

RS&H

RS&H, Inc.
13750 SAN PEDRO AVE, SUITE 300
SAN ANTONIO, TX 78232
(210) 224-2800 FAX (210) 545-3103
WWW.RSANDH.COM
REGISTERED FIRM NO: F-3401

SAN ANTONIO INTERNATIONAL AIRPORT
SAN ANTONIO, TEXAS

PERIMETER ROAD IMPROVEMENTS

CONSULTANTS

ATKINS
15900 La Cantera Parkway, Suite 26200
San Antonio, TX 78256
Phone: 210.828.9494

STATE OF TEXAS — STEVEN D. TEMPLER — 86656 — PROFESSIONAL ENGINEER

$DATE$

REVISIONS

NO.	DESCRIPTION	DATE

DATE ISSUED: 04-28-16
REVIEWED BY:
DRAWN BY:
DESIGNED BY:

AEP PROJECT NUMBER
000-0000-000

©2016 RS&H, INC.

SHEET TITLE
DRAINAGE DETAILS - SHEET 4

SHEET NUMBER
C504

100% BID SET