SITE DESCRIPTION

PROJECT NAME AND LOCATION: VARIOUS TAXIWAYS, SAN ANTONIO INTERNATIONAL AIRPORT

CONTACT AND PHONE NO.:

PROJECT DESCRIPTION: RECONSTRUCTION OF TAXIWAY J, ELECTRICAL UPGRADES ALONG RUNWAY 12R–30L, PANEL REHABILITATION ALONG TAXIWAY G AT INTERSECTION OF TAXIWAY A, AND PAVEMENT REHABILITATION ALONG TAXIWAY G AT INTERSECTION OF TAXIWAY D.

MAJOR SOIL DISTURBING ACTIVITIES: DEMOLITION, EXCAVATION, GRADING, TRENCHING, AND BACKFILLING.

TOTAL PROJECT AREA (ACRES): BASE BID: 0.9 ACRES
ALTERNATE 1: 1.2 ACRES
ALTERNATE 2: 0.6 ACRES
ALTERNATE 3: 2.1 ACRES

TOTAL AREA TO BE DISTURBED: BASE BID: 2.5 ACRES
ALTERNATE 1: 1.7 ACRES
ALTERNATE 2: 0.6 ACRES
ALTERNATE 3: 3.2 ACRES

WEIGHTED RUNOFF COEFFICIENT: (AFTER CONSTRUCTION) C = 0.91

EXISTING CONDITION OF SOIL, VEGETATIVE COVER AND % OF VEGETATIVE COVER: 8%

DESCRIPTION OF WATER DISCHARGED NOT ASSOCIATED WITH CONSTRUCTION: N/A

NAME OF RECEIVING WATERS: SALADO CREEK

IDENTIFY STORMWATER DISCHARGE POINTS: THE STORMWATER ENTERS THE EXISTING ONSITE STORM DRAIN SYSTEM. THE STORM DRAIN SYSTEM OUTFALLS INTO SALADO CREEK.

A DESCRIPTION AND TIME FRAME FOR INSTALLATION OF STABILIZATION PRACTICES IN CONJUNCTION WITH CONSTRUCTION: CONTROLS WILL BE INSTALLED BEFORE CONSTRUCTION ACTIVITY BEGINS AT EACH WORK AREA.

EROSION AND SEDIMENTATION CONTROLS

SOIL STABILIZATION PRACTICES:

- X SOD
- TEMPORARY SEEDING
- PERMANENT PLANTING, SODDING OR SEEDING
- MULCHING
- SOIL RETENTION BLANKET
- BUFFER ZONES
- PRESERVATION OF NATURAL RESOURSES

OTHER:

DISTURBED AREAS ON WHICH CONSTRUCTION ACTIVITY HAS CEASED TEMPORARILY OR PERMANENTLY, SHALL BE STABILIZED WITHIN 14 DAYS UNLESS ACTIVITIES ARE SCHEDULED TO RESUME AND DONE WITHIN 21 DAYS.

STRUCTURAL PRACTICES:

- X SILT FENCES
- X HAY BALES
- X GRAVEL FILTRATION BAGS
- X ROCK BERMS
- DIVERSION, INTERCEPTOR OR PERIMETER DIKES
- DIVERSION, INTERCEPTOR OR PERIMETER SWALES
- DIVERSION, DIKE AND SWALE COMBINATIONS
- PAVED FLUMES
- X ROCK BEDDING AT CONSTRUCTION EXIT (STABILIZED ENTRANCE)
- TIMBER MATTING AT CONSTRUCTION EXIT (STABILIZED ENTRANCE)
- CHANNEL LINERS
- SEDIMENT TRAPS
- SEDIMENT BASINS
- STORM INLET SEDIMENT TRAP
- STONE OUTLET SEDIMENT STRUCTURES
- CURBS AND GUTTERS
- X STORM SEWERS
- VELOCITY CONTROL STRUCTURES
- GEOTEXTILES

OTHER:

NARRATIVE – SEQUENCE OF CONSTRUCTION (STORMWATER MANAGEMENT) ACTIVITIES:

THE ORDER OF ACTIVITIES WILL BE AS FOLLOWS: --

A DESCRIPTION OF MAINTENANCE PROCEDURES FOR CONTROL MEASURES USED: --

STORMWATER MANAGEMENT: --

A DESCRIPTION OF PERMANENT STORM WATER MANAGEMENT CONTROLS:

FOLLOWING CONSTRUCTION, SOILED AREAS WILL BE PERMANENTLY VEGETATED AND STORM SEWERS WILL COLLECT RUNOFF TO MINIMIZE EROSION OF UNPAVED AREAS. EROSION CONTROLS AT THE SPOILS DISPOSAL SITES LOCATED ELSEWHERE ON THE AIRPORT PROPERTY SHALL BE PLANNED AND IMPLEMENTED BY THE CONTRACTOR.

OTHER EROSION AND SEDIMENTATION CONTROLS

MAINTENANCE:

ALL EROSION AND SEDIMENT CONTROLS WILL BE MAINTAINED IN GOOD WORKING ORDER. IF A REPAIR IS NECESSARY, IT WILL BE DONE AT THE EARLIEST DATE POSSIBLE, BUT NO LATER THAN 7 CALENDAR DAYS AFTER THE SURROUNDING EXPOSED GROUND HAS DRIED SUFFICIENTLY TO PREVENT FURTHER DAMAGE FROM HEAVY EQUIPMENT. THE AREAS ADJACENT TO CREEKS AND DRAINAGEWAYS SHALL HAVE PRIORITY, FOLLOWED BY DEVICES PROTECTING STORM SEWER INLETS.

INSPECTION:

AN INSPECTION WILL BE PERFORMED BY THE CONTRACTOR EVERY 14 DAYS AS WELL AS AFTER EVERY 1 / 2" OR MORE OF RAIN (RECORDED ON A NON–FREEZING RAIN GAUGE TO BE LOCATED AT THE PROJECT SITE). AN INSPECTION AND MAINTENANCE REPORT WILL BE MADE PER INSPECTION. BASED ON THE INSPECTION RESULTS, THE CONTROLS SHALL BE CORRECTED BEFORE THE NEXT SCHEDULED INSPECTION.

WASTE MATERIALS:

ALL WASTE MATERIALS WILL BE COLLECTED AND STORED IN A SECURELY LIDDED METAL DUMPSTER. THE DUMPSTER WILL MEET ALL STATE AND LOCAL CITY SOLID WASTE MANAGEMENT REGULATIONS. ALL TRASH AND CONSTRUCTION DEBRIS FROM THE SITE WILL BE DEPOSITED IN THE DUMPSTER. THE DUMPSTER WILL BE EMPTIED AS NECESSARY OR AS REQUIRED BY LOCAL REGULATION AND THE TRASH WILL BE HAULED TO A LOCAL DUMP. NO CONSTRUCTION MATERIALS WILL BE BURIED ON SITE.

HAZARDOUS WASTE (INCLUDING SPILL REPORTING):

AT A MINIMUM, ANY PRODUCTS IN THE FOLLOWING CATEGORIES ARE CONSIDERED TO BE HAZARDOUS: PAINTS, ACIDS FOR CLEANING MASONRY SURFACES, GASOLINE, MOTOR OIL, CLEANING SOLVENTS, ASPHALT PRODUCTS, CHEMICAL ADDITIVES FOR SOIL STABILIZATION OR CONCRETE CURING COMPOUNDS AND ADDITIVES. IN THE EVENT OF A SPILL WHICH MAY BE HAZARDOUS AND MEETS REPORTING REQUIREMENTS, THE NATIONAL RESPONSE CENTER SHOULD BE CONTACTED AT 800–424–8802, AND ANY REQUIRED CHANGES MADE TO THE SWPPP. IN THE EVENT OF A LIFE THREATENING SPILL THE SAN ANTONIO FIRE DEPARTMENT SHOULD BE NOTIFIED AS WELL AS THE APPROPRIATE CITY INSPECTORS.

SANITARY WASTE

OFFSITE EXCAVATION SOURCE LOCATION
TO BE DETERMINED BY THE CONTRACTOR.

OFFSITE FILL SOURCE LOCATION
TO BE DETERMINED BY THE CONTRACTOR.

OFFSITE VEHICLE TRACKING

- HAUL ROADS DAMPENED FOR DUST CONTROL.
- X LOADED HAUL TRUCKS TO BE COVERED WITH TARPAULIN
- X EXCESS DIRT ON ROAD TO BE REMOVED DAILY
- X STABILIZED CONSTRUCTION ENTRANCE.

OTHER:

CERTIFICATION THAT SITE DISTURBANCE AND / OR DISCHARGES WILL NOT EFFECT LISTED ENDANGERED SPECIES AND THEIR HABITAT.
WHAT METHOD IS USED TO SATISFY THE ENDANGERED SPECIES REQUIREMENTS?

REMARKS:

DISPOSAL AREAS, STOCKPILES AND HAUL ROADS SHALL BE CONSTRUCTED IN A MANNER THAT WILL MINIMIZE AND CONTROL THE AMOUNT OF SEDIMENT THAT ENTERS RECEIVING WATERS. DISPOSAL AREAS SHALL NOT BE LOCATED IN ANY WETLAND, BODY OF WATER, STREAMBED OR FLOODPLAIN CONSTRUCTION STAGING AREAS AND VEHICLE MAINTENANCE AREAS SHALL BE CONSTRUCTED BY THE CONTRACTOR IN A MANNER TO MINIMIZE THE RUNOFF OF POLLUTANTS. ALL WATERWAYS SHALL BE CLEARED AS SOON AS POSSIBLE OF TEMPORARY EMBANKMENT, TEMPORARY BRIDGES, MATTING, FALSEWORK, PILING DEBRIS OR OTHER OBSTRUCTION PLACED DURING CONSTRUCTION OPERATIONS THAT ARE NOT PART OF THE FINISHED WORK.

CITY OF SAN ANTONIO AVIATION DEPARTMENT

SAN ANTONIO AIRPORT SYSTEM

Kimley»Horn
KIMLEY–HORN AND ASSOCIATES, INC.
601 NW LOOP 410, SUITE 350
SAN ANTONIO, TEXAS 78216
PHONE: (210) 541–9166
TEXAS REGISTERED FIRM, NO. 928

RUNWAY 12R-30L ELECTRICAL IMPROVEMENTS AND TERMINAL AREA TAXIWAY IMPROVEMENTS (PACKAGE 4)

MICHAEL A. NORBY 87178 REGISTERED PROFESSIONAL ENGINEER
05/03/16

MARK	DATE	DESCRIPTION

ISSUE:

PROJECT NO:	33-0019X
FILE NAME:	_33-00193-R1CE-101-D00
DRAWN BY:	CAD
CHECKED BY:	MAN
COPYRIGHT:	2016

SHEET TITLE:

STORM WATER POLLUTION PREVENTION COVER SHEET

C12.1

k:\phx_aviation\191629001- san antonio\CADD_Package 4_33-00193-R1CE-101-D00.dwg April 11, 2016 Crawford, Pat

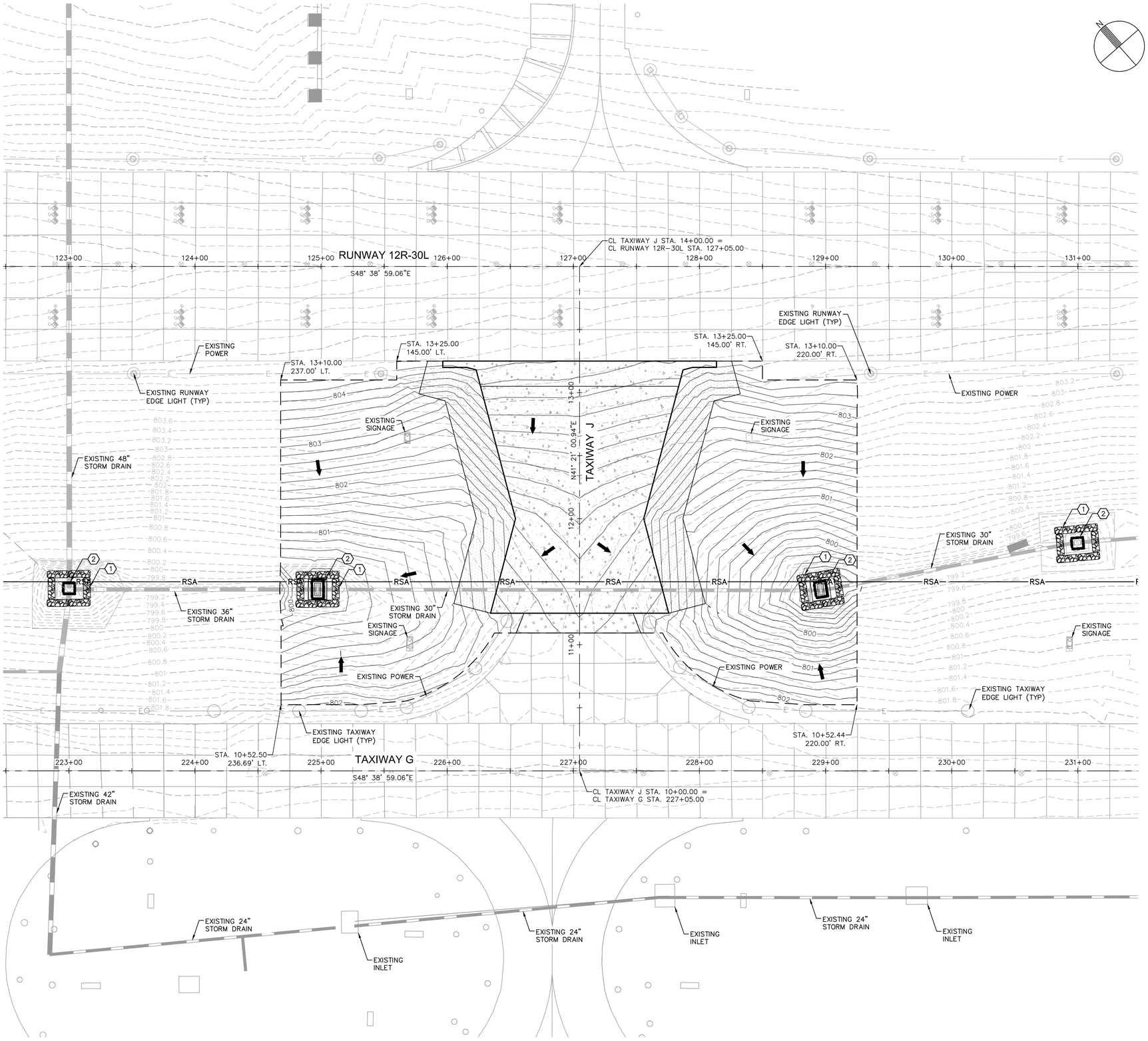

LEGEND

- PORTLAND CEMENT CONCRETE PAVEMENT
- PORTLAND CEMENT CONCRETE TRANSITION
- ASPHALT CONCRETE SHOULDER PAVEMENT
- ROCK FILTER DAM
- DRAINAGE INLET PROTECTION
- FLOW DIRECTION ARROW
- GRADING LIMITS
- 777 EXISTING CONTOUR
- 777 PROPOSED CONTOUR
- X SEDIMENT CONTROL FENCE
- PROPOSED STORM DRAIN
- EXISTING STORM DRAIN

GENERAL NOTES

1. THE PURPOSE OF THE SWPPP IS TO PROTECT THE EXISTING DRAINAGE BASINS, CHANNELS, AND PIPE NETWORKS FROM SEDIMENTATION AND CONTAMINANTS.
2. THIS PROPOSED LAYOUT SHOWS THE FINAL CONDITION OF THE PROJECT. THE CONTRACTOR IS RESPONSIBLE FOR ESTABLISHING AND MAINTAINING BMP INSTALLATIONS DURING CONSTRUCTION.
3. PLACE WATTLES IN FRONT OF ALL INLETS.
4. SEE SPECIFICATION T-904 FOR SODDING REQUIREMENTS.
5. REFER TO ELECTRICAL PLANS (SERIES E) FOR AIRFIELD LIGHTING, SIGNING, AND ELECTRICAL FEATURES.
6. LIMITS OF SODDING ARE A TYPICAL WIDTH OF 15 FEET OFF OF THE EDGES OF PROPOSED PAVEMENT.
7. INLET PROTECTION TO BE PLACED ON EXISTING STORM DRAIN INLETS INITIALLY AND REMOVED UPON DEMOLITION OF EXISTING STORM DRAIN SYSTEM. INLET PROTECTION SHALL BE PLACED ON PROPOSED STORM DRAIN INLETS UPON THEIR CONSTRUCTION.
8. SILT FENCE MUST BE REMOVED FROM RUNWAY SAFETY AREA PRIOR TO OPENING OF RUNWAY.
9. A NOTAM SHALL BE ISSUED DURING THIS PHASE THAT WORK WILL BE COMPLETED ON TAXIWAY J, OUTSIDE THE RSA, WHILE STORM WATER MEASURES WILL BE WITHIN THE RSA.

CONSTRUCTION NOTES

1. INSTALL ROCK FILTER DAM PER DETAIL SHEET C12.3.
2. INSTALL CATCH BASIN PROTECTION PER DETAIL SHEET C12.4.
3. INSTALL SEDIMENT CONTROL FENCE PER DETAIL SHEET C12.3.

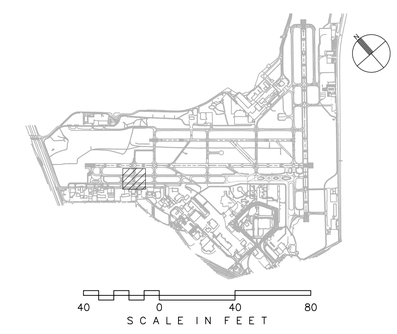

CITY OF
SAN ANTONIO
AVIATION
DEPARTMENT

SAN ANTONIO AIRPORT SYSTEM

Kimley»Horn
KIMLEY-HORN AND ASSOCIATES, INC.
601 NW LOOP 410, SUITE 350
SAN ANTONIO, TEXAS 78216
PHONE: (210) 541-9166
TEXAS REGISTERED FIRM,
NO. 928

RUNWAY 12R-30L ELECTRICAL IMPROVEMENTS AND TERMINAL AREA TAXIWAY IMPROVEMENTS (PACKAGE 4)

MICHAEL A. NORBY
87178
REGISTERED
PROFESSIONAL ENGINEER
05/03/16

MARK	DATE	DESCRIPTION

ISSUE:

PROJECT NO:	33-0019X
FILE NAME:	_33-00193-R1CE-401-D00
DRAWN BY:	CAD
CHECKED BY:	MAN
COPYRIGHT:	2016

SHEET TITLE:

STORM WATER POLLUTION PREVENTION PLAN - TAXIWAY J - BASE BID

C12.2

SHEET NO. 32 OF 157

k:\phs_aviation\191629001- san antonio\CADD_Package 4_33-00193-R1CE-401-D00.dwg April 11, 2016 Crawford, Pat

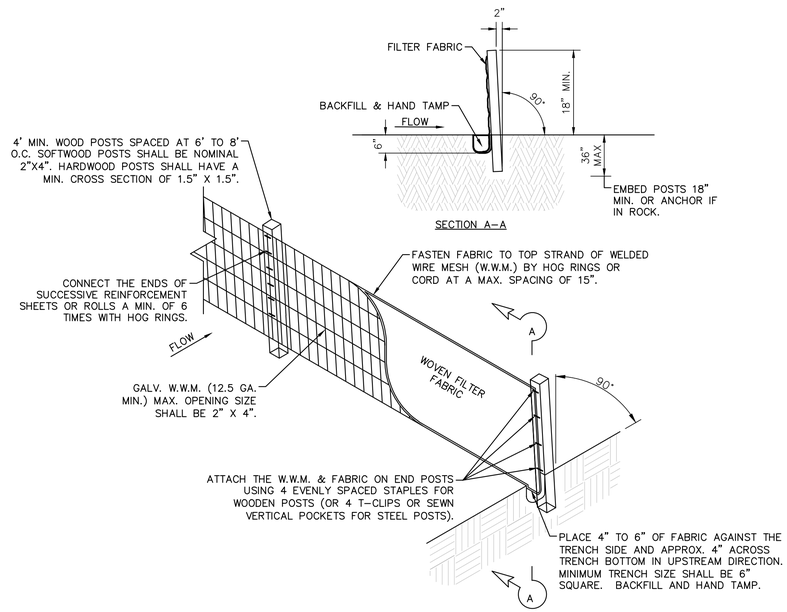

1 / C12.3 TEMPORARY SEDIMENT CONTROL FENCE

N.T.S.

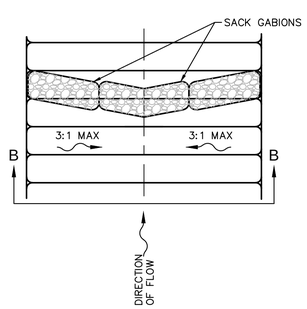

PLAN VIEW

N.T.S.

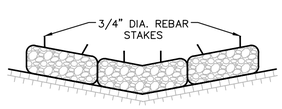

SECTION B-B

N.T.S.

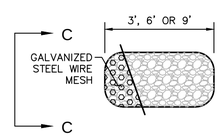

TYPE 4 SACK GABION DETAIL

N.T.S.

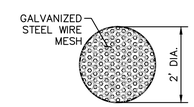

SECTION C-C

N.T.S.

TYPE 4 FILTER DAM AT DITCHES & SMALLER CHANNELS PLAN VIEW

ROCK FILTER DAMS

ROCK FILTER DAM USAGE GUIDELINES

ROCK FILTER DAMS SHOULD BE CONSTRUCTED DOWNSTREAM FROM DISTURBED AREAS TO INTERCEPT SEDIMENT FROM OVERLOAD RUNOFF AND/OR CONCENTRATED FLOW. THE DAMS SHOULD BE SIZED TO FILTER A MAXIMUM FLOW THRU RATE OF 60 GPM/FT SQUARED OF CROSS SECTIONAL AREA. A TWO YEAR STORM FREQUENCY MAY BE USED TO CALCULATE THE FLOW RATE.

TYPE 1 (18" HIGH WITH NO WIRE MESH):

TYPE 1 MAY BE USED AT THE TOE OF SLOPES, AROUND INLETS, IN SMALL DITCHES AND AT DIKE OR SWALE OUTLETS. THIS TYPE OF DAM IS RECOMMENDED TO CONTROL EROSION FROM A DRAINAGE AREA OF 5 ACRES OR LESS. TYPE 1 MAY NOT BE USED IN CONCENTRATED HIGH VELOCITY FLOWS (APPROXIMATELY 8 FT/SEC OR MORE) IN WHICH AGGREGATE WASH OUT MAY OCCUR. SANDBAGS MAY BE USED AT THE EMBEDDED FOUNDATION (4" DEEP MIN) FOR BETTER FILTERING EFFICIENCY OF LOW FLOWS IF CALLED FOR ON THE PLANS OR AS DIRECTED BY THE ENGINEER.

TYPE 2 (18" HIGH WITH NO WIRE MESH):

TYPE 2 MAY BE USED IN DITCHES AND AT DIKE OR SWALE OUTLETS.

TYPE 3 (36" HIGH WITH NO WIRE MESH):

TYPE 3 MAY BE USED IN STREAM FLOW AND SHOULD BE SECURED TO THE STREAM BED.

TYPE 4 (SACK GABIONS):

TYPE 4 MAY BE USED IN DITCHES AND SMALLER CHANNELS TO FORM AN EROSION CONTROL DAM.

GENERAL NOTES

1. IF SHOWN ON THE PLANS OR DIRECTED BY THE ENGINEER, FILTER DAMS SHOULD BE PLACED NEAR THE TOE OF SLOPES WHERE EROSION IS ANTICIPATED, UPSTREAM AND/OR DOWNSTREAM AT DRAINAGE STRUCTURES, AND IN ROADWAY DITCHES AND CHANNELS TO COLLECT SEDIMENT.
2. MATERIALS (AGGREGATE, WIRE MESH, SANDBAGS, ETC.) SHALL BE AS INDICATED BY THE SPECIFICATION FOR ROCK FILTER DAMS FOR EROSION AND SEDIMENTATION CONTROL.
3. THE ROCK FILTER DAM DIMENSIONS SHALL BE AS INDICATED ON THE STORM WATER POLLUTION PREVENTION PLANS.
4. SIDE SLOPES SHOULD BE 2:1 OR FLATTER. DAMS WITHIN THE SAFETY ZONE SHALL HAVE SIDE SLOPES AT 6:1 OR FLATTER.
5. MAINTAIN A MINIMUM OF 1' BETWEEN TOP OF ROCK FILTER DAM WEIR AND TOP OF EMBANKMENT FOR FILTER DAMS AT SEDIMENT TRAPS.
6. FILTER DAMS SHOULD BE EMBEDDED A MINIMUM OF 4" INTO THE EXISTING GROUND.
7. THE SEDIMENT TRAP FOR PONDING OF SEDIMENT LADEN RUNOFF SHALL BE OF THE DIMENSIONS SHOWN ON THE PLANS.
8. ROCK FILTER DAM TYPES 2 & 3 SHALL BE SECURED WITH 20 GAUGE GALVANIZED WOVEN WIRE MESH WITH 1" DIAMETER HEXAGONAL OPENINGS. THE AGGREGATE SHALL BE PLACED ON THE MESH TO THE HEIGHT AND SLOPES SPECIFIED. THE MESH SHALL BE FOLDED AT THE UPSTREAM SIDE OVER THE AGGREGATE AND TIGHTLY SECURED TO ITSELF ON THE DOWNSTREAM SIDE USING WIRE TIES OR HOG RINGS. IN STREAM USE, THE MESH SHOULD BE SECURED OR STAKED TO THE STREAM BED PRIOR TO AGGREGATE PLACEMENT.
9. SACK GABIONS SHOULD BE STAKED DOWN FROM 3/4" DIA. REBAR STAKES.
10. FLOW OUTLET SHOULD BE ONTO A STABILIZED AREA (VEGETATION, ROCK, ETC.)
11. THE GUIDELINES SHOWN HEREON ARE SUGGESTIONS ONLY AND MAY BE MODIFIED BY THE ENGINEER.

CITY OF SAN ANTONIO AVIATION DEPARTMENT

SAN ANTONIO AIRPORT SYSTEM

Kimley»Horn
KIMLEY–HORN AND ASSOCIATES, INC.
601 NW LOOP 410, SUITE 350
SAN ANTONIO, TEXAS 78216
PHONE: (210) 541–9166
TEXAS REGISTERED FIRM, NO. 928

RUNWAY 12R-30L ELECTRICAL IMPROVEMENTS AND TERMINAL AREA TAXIWAY IMPROVEMENTS (PACKAGE 4)

MICHAEL A. NORBY 87178 REGISTERED PROFESSIONAL ENGINEER
05/03/16

MARK	DATE	DESCRIPTION

ISSUE:

PROJECT NO:	33-0019X
FILE NAME:	_33-00193-R1CE-402-D00
DRAWN BY:	CAD
CHECKED BY:	MAN
COPYRIGHT:	2016

SHEET TITLE:

STORM WATER POLLUTION PREVENTION PLAN DETAILS

C12.3

k:\phx_aviation\191629001- san antonio\CADD_Package 4_33-00193-R1CE-402-D00.dwg April 11, 2016 Crawford, Pat

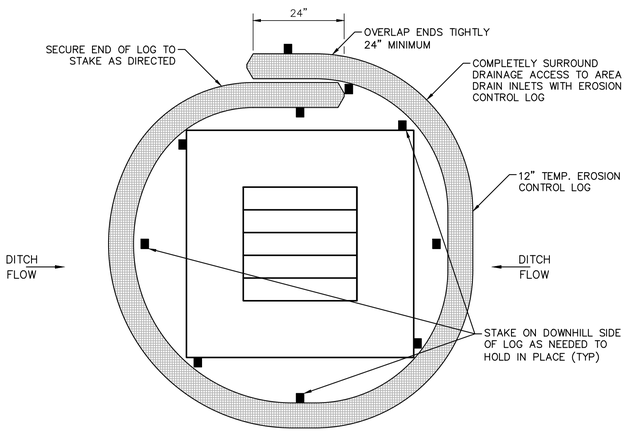

1 C12.4 DROP INLET SEDIMENT TRAP

N.T.S.

Texas Department of Transportation

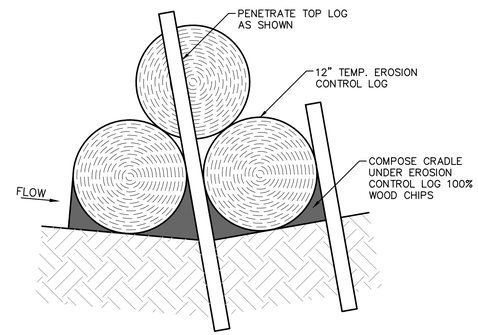

2 C12.4 DITCH LINE SEDIMENT TRAP A-A

N.T.S.

Texas Department of Transportation

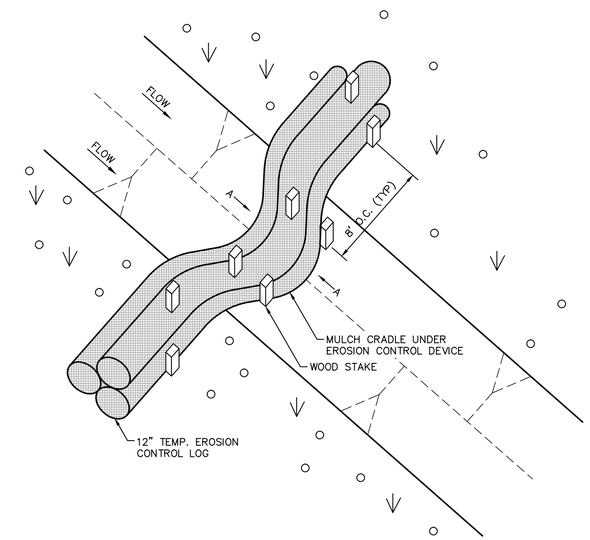

3 C12.4 DITCH LINE SEDIMENT TRAP

N.T.S.

Texas Department of Transportation

SEDIMENT BASIN AND TRAP USAGE GUIDELINES

A SEDIMENT TRAP MAY BE USED TO PRECIPITATE SEDIMENT OUT OF RUNOFF DRAINING FROM AN UNSTABILIZED AREA.

TRAPS: THE DRAINAGE AREA FOR A SEDIMENT TRAP SHOULD NOT EXCEED 5 ACRES. THE TRAP CAPACITY SHOULD BE 1800 CF/ACRE (0.5" OVER THE DRAINAGE AREA).

SEDIMENT TRAPS SHOULD BE PLACED IN THE FOLLOWING LOCATIONS:
1. IMMEDIATELY PRECEDING DRAIN INLETS
2. JUST BEFORE THE DRAINAGE ENTERS A WATER COURSE
3. JUST BEFORE THE DRAINAGE LEAVES THE RIGHT OF WAY
4. JUST BEFORE THE DRAINAGE LEAVES THE CONSTRUCTION LIMITS WHERE DRAINAGE FLOWS AWAY FROM THE PROJECT.

THE TRAP SHOULD BE CLEANED WHEN THE CAPACITY HAS BEEN REDUCED BY 1/2 OR THE SEDIMENT HAS ACCUMULATED TO A DEPTH OF 1', WHICHEVER IS LESS. CLEANING AND REMOVAL OF ACCUMULATED SEDIMENT DEPOSITS IS INCIDENTAL AND WILL NOT BE PAID FOR SEPARATELY.

GENERAL NOTES

1. LENGTHS OF EROSION CONTROL LOGS SHALL BE IN ACCORDANCE WITH MANUFACTURER'S RECOMMENDATIONS AND AS REQUIRED FOR THE PURPOSE INTENDED. MAXIMUM LENGTH OF LOGS SHALL BE 30' FOR 12" DIAMETER LOGS.
2. UNLESS OTHERWISE DIRECTED, USE BIODEGRADABLE OR PHOTODEGRADABLE CONTAINMENT MESH ONLY WHERE LOG WILL REMAIN IN PLACE AS PART OF A VEGETATIVE SYSTEM. FOR TEMPORARY INSTALLATIONS, USE RECYCLABLE CONTAINMENT MESH.
3. STUFF LOGS WITH SUFFICIENT FILTER MATERIAL TO ACHIEVE DENSITY THAT WILL HOLD SHAPE WITHOUT EXCESSIVE DEFORMATION.
4. STAKES SHALL BE 2" X 2" WOOD 4' LONG, EMBEDDED SUCH THAT 2" PROTRUDES ABOVE LOG.
5. COMPOST CRADLE MATERIAL IS INCIDENTAL WILL NOT BE PAID FOR SEPARATELY.

CITY OF
SAN ANTONIO
AVIATION
DEPARTMENT

SAN ANTONIO AIRPORT SYSTEM

Kimley»Horn
KIMLEY-HORN AND ASSOCIATES, INC.
601 NW LOOP 410, SUITE 350
SAN ANTONIO, TEXAS 78216
PHONE: (210) 541-9166

TEXAS REGISTERED FIRM,
NO. 928

RUNWAY 12R-30L
ELECTRICAL IMPROVEMENTS
AND TERMINAL AREA
TAXIWAY IMPROVEMENTS
(PACKAGE 4)

MICHAEL A. NORBY
87178
REGISTERED
PROFESSIONAL ENGINEER
05/03/16

MARK	DATE	DESCRIPTION

ISSUE:

PROJECT NO:	33-0019X
FILE NAME:	_33-00193-R1CE-402-D00
DRAWN BY:	CAD
CHECKED BY:	MAN
COPYRIGHT:	2016

SHEET TITLE:

STORM WATER
POLLUTION
PREVENTION PLAN
DETAILS

C12.4

k:\phx_aviation\191629001- san antonio\CADD_Package 4_33-00193-R1CE-402-D00.dwg April 11, 2016 Crawford, Pat

SAN ANTONIO INTERNATIONAL AIRPORT

SAN ANTONIO, TEXAS

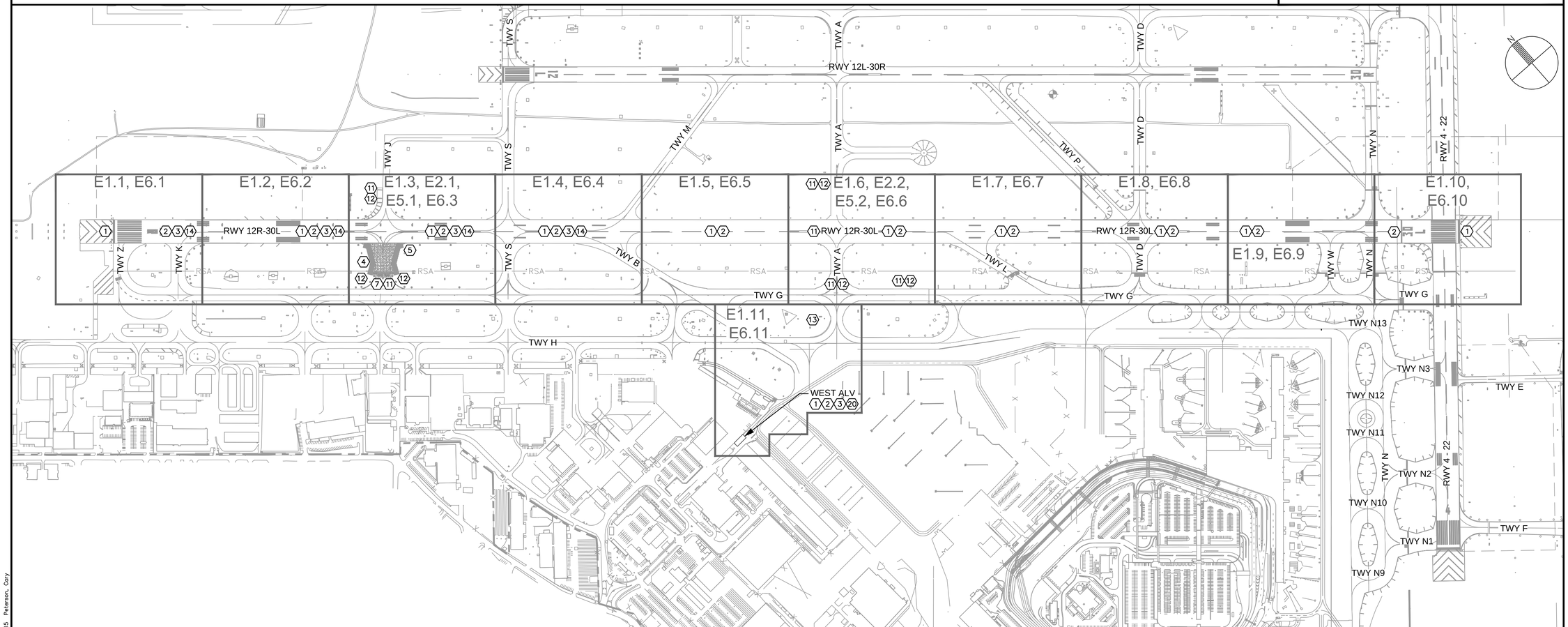

RUNWAY 12R-30L ELECTRICAL IMPROVEMENTS AND TERMINAL AREA TAXIWAY IMPROVEMENTS PACKAGE 4 - BASE BID

PROJECT NO. 33-0019X
FAA AIP 3-48-0192-XX-2015

ELECTRICAL SCOPE OF WORK - BASE BID

1. SALVAGE AND REINSTALL EXISTING ELEVATED AND IN-PAVEMENT RUNWAY EDGE AND THRESHOLD/END LIGHTS WITH NEW ISOLATION TRANSFORMERS ON NEW OR EXISTING BASES. INSTALL ALL NEW CABLE SYSTEM INCLUDING HOME RUN FROM WEST ALV.
2. INSTALL NEW RUNWAY CENTERLINE LIGHTS ON EXISTING L-868 BASES WITH NEW ISOLATION TRANSFORMERS. INSTALL ALL NEW CABLE SYSTEM INCLUDING HOME RUN FROM WEST ALV. SALVAGE EXISTING LIGHTS TO OWNER.
3. SALVAGE AND REINSTALL EXISTING IN-PAVEMENT RUNWAY TOUCHDOWN ZONE LIGHTS ON EXISTING L-868 BASES WITH NEW ISOLATION TRANSFORMERS. INSTALL ALL NEW CABLE SYSTEM INCLUDING HOME RUN FROM WEST ALV.
4. SALVAGE AND REINSTALL EXISTING ELEVATED QUARTZ TAXIWAY EDGE LIGHTS WITH NEW ISOLATION TRANSFORMERS ON NEW L-867 BASES WITH NEW CONDUIT AND CABLES.
5. INSTALL NEW SIGNS WITH NEW ISOLATION TRANSFORMERS ON NEW CONCRETE FOUNDATIONS.
7. INSTALL NEW L-867 BASES & CONDUIT FOR FUTURE ELEVATED RUNWAY GUARD LIGHTS.
11. INSTALL NEW DUCT BANK PARALLEL TO RUNWAY 30L-12R. DIRECTIONAL BORE UNDER EXISTING RUNWAY AND TAXIWAY PAVEMENT.
12. INSTALL NEW PRECAST CONCRETE HANDHOLE AND ADJACENT JUNCTION CAN PLAZA.
13. INSTALL NEW JUNCTION CAN PLAZA ADJACENT TO EXISTING CONCRETE HANDHOLE.
14. RUNWAY CENTERLINE FIXTURE BASES: MODIFY OR REPLACE EXISTING L-868B BASE CAN FOR IN-PAVEMENT RUNWAY CENTERLINE LIGHT, SEE DETAILS ON DRAWING E3.2. APPLIES TO ALL CENTERLINE BASES WEST OF TAXIWAY B AND OTHERS AS DIRECTED BY THE OWNER.
20. WEST AIRFIELD LIGHTING VAULT: REPLACE 250kW ENGINE GENERATOR. DRAWINGS E7.1 & E7.2.

CITY OF SAN ANTONIO AVIATION DEPARTMENT

SAN ANTONIO AIRPORT SYSTEM

Kimley»Horn
KIMLEY-HORN AND ASSOCIATES, INC.
601 NW LOOP 410, SUITE 350
SAN ANTONIO, TEXAS 78216
PHONE: (210) 541-9166
TEXAS REGISTERED FIRM, NO. 928

RUNWAY 12R-30L ELECTRICAL IMPROVEMENTS AND TERMINAL AREA TAXIWAY IMPROVEMENTS (PACKAGE 4)

STATE OF TEXAS
ERIC C. LOVEJOY
84051
LICENSED
PROFESSIONAL ENGINEER
5/27/16

MARK	DATE	DESCRIPTION
ISSUE:		---

PROJECT NO:	33-0019X
FILE NAME:	_33-00193-R1EC-001
DRAWN BY:	CMP
CHECKED BY:	ECL
COPYRIGHT:	2016

SHEET TITLE:

ELECTRICAL SCOPE OF WORK - BASE BID

E0.1

K:\REN_Aviation\191629001-SAT Rwy & Twy Improvements\05 CAD_PACKAGE 4_33-00193-R1EC-001.dwg October 28, 2015 Peterson, Cary

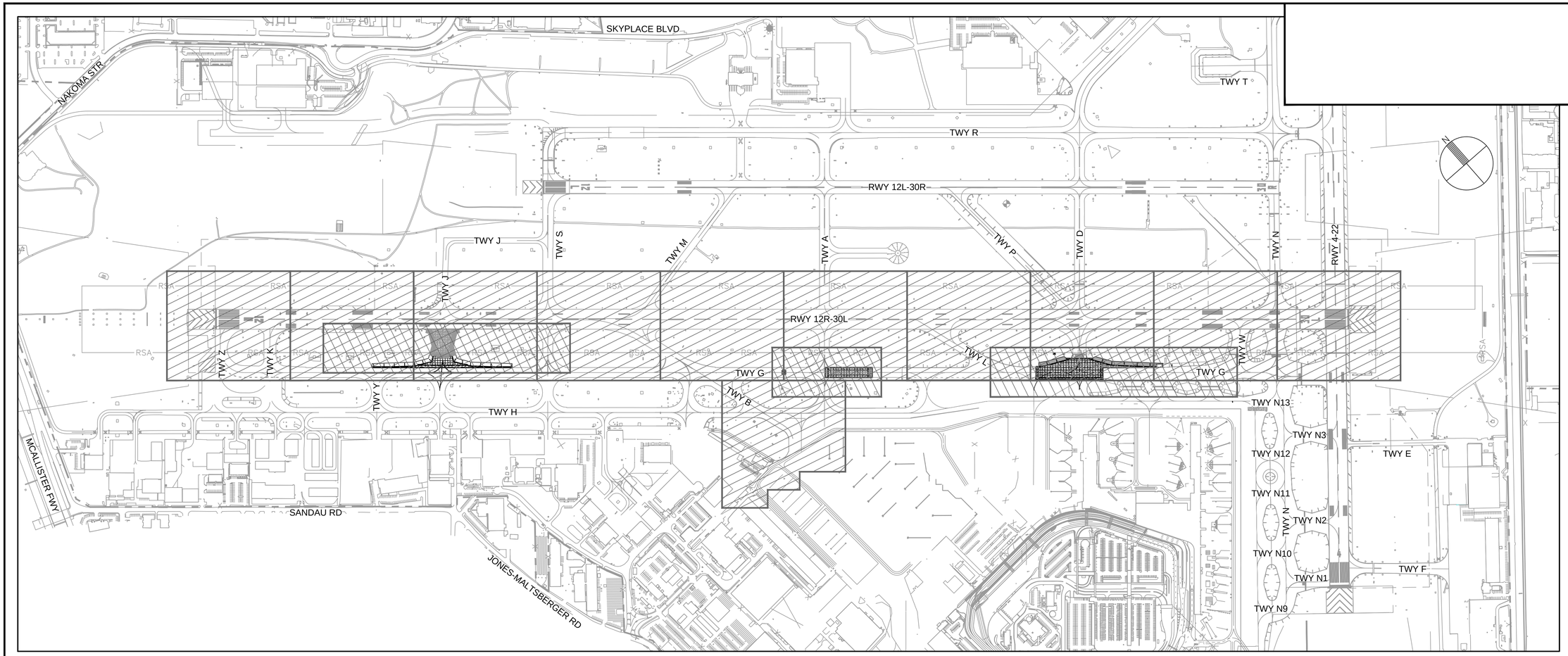

ABBREVIATION LIST

AB (AB)	ABANDONED CONDUIT OR DUCT (OR ABAND.)
ALV	AIRFIELD LIGHTING VAULT
ATCT	AIR TRAFFIC CONTROL TOWER
BC	BARE COPPER CONDUCTOR
BL	BLANK
C, CNDT	CONDUIT
C.E.	CONCRETE ENCASED (PER P–610)
CKT	CIRCUIT
C/L, ℄	CENTERLINE
CLSM	CONTROLLED LOW STRENGTH MATERIAL (P–153)
CONC	CONCRETE, P–610 FOR ELECTRICAL FACILITIES 4000 PSI U.O.N.
C.M.	CONSTRUCTION MANAGER
COVER	BLANK COVER FOR L–867 OR L–868 BASE
CTPB	CEMENT TREATED PERMEABLE BASE
DB. DEB	DIRECT EARTH BURIAL, PER P–152 OR P–153
(E)	EXISTING EQUIPMENT OR FACILITY
FAA	FEDERAL AVIATION ADMINISTRATION
F.O.C.	FIBER OPTIC CABLE
ISO	ISOLATION (TRANSFORMER)
ISO–XFMR	ISOLATION TRANSFORMER
LF	LINEAR FOOT
LT	LEFT; USUALLY OFFSET OF SURVEY DATUM
MFGR	MANUFACTURER
(N)	NEW EQUIPMENT OR FACILITY
OFFSET	DISTANCE FROM SURVEY DATUM BASE LINE (LT OR RT)
PB	PULL BOX (L–115)
PCC(P)	PORTLAND CEMENT CONCRETE (PAVEMENT PER P–501)
PMB	PROCESS MISCELLANEOUS BASE (SEE CIVIL DRAWINGS)
P.O.C.	POINT OF CONNECTION (WITH EXISTING CONDUIT OR DUCT)
PR	PROPOSED (NEW) EQUIPMENT OR FACILITY OR PAIR (E.G 12–PR)
PVC	POLYVINYLCHLORIDE: CONDUIT MATERIAL
R.E.	RESIDENT ENGINEER
(R)	REMOVE EQUIPMENT OR FACILITY
(R/R)	REMOVE AND RELOCATE EQUIPMENT OR FACILITY
(REL)	RELOCATED EQUIPMENT OR FACILITY (SEE R/R)
(RL)	RELABEL CIRCUIT OR EQUIPMENT
RPZ	RUNWAY PROTECTION ZONE
RSA	RUNWAY SAFETY AREA
RT	RIGHT; USUALLY OFFSET OF SURVEY DATUM
R/W, RWY	RUNWAY
STA:	STATION, DISTANCE ALONG SURVEY DATUM BASE LINE
STR	STRAND; SINGLE ELEMENT OF CABLE ASSEMBLY
(T), TEMP.	TEMPORARY EQUIPMENT OR FACILITY
TDZ	TOUCHDOWN ZONE
TSA	TAXIWAY SAFETY AREA
T/W, TWY	TAXIWAY
TYP.	TYPICAL
U.O.N.	UNLESS OTHERWISE NOTED
WWF	WOVEN WIRE FABRIC STEEL REINFORCEMENT IN P–610
XFMR	TRANSFORMER

GENERAL NOTES

1. REFER TO C2 SERIES DRAWINGS FOR PHASING NOTES.
2. CONTRACTOR SHALL MAINTAIN ON HAND SUFFICIENT MATERIAL/EQUIPMENT REQUIRED TO PROVIDE TEMPORARY LIGHTING AND CIRCUIT EXTENSIONS. THIS INCLUDES, BUT IS NOT LIMITED TO, FIXTURES, TRANSFORMERS, BASES, CONDUIT, L–824 CABLE & L–823 SPLICE KITS. THESE ITEMS WILL NOT BE AVAILABLE FROM THE SAN ANTONIO INTERNATIONAL AIRPORT MAINTENANCE SHOP.
3. CONTRACTOR SHALL MAINTAIN THE INDICATED MINIMUM STOCK OF THE FOLLOWING ITEMS:
   - 20 EACH TEMPORARY LIGHT FIXTURES WITH BASES
   - 25 EACH L–830 6.6 AMP TRANSFORMERS OF VARIOUS CAPACITIES
   - 1000 LF 2" PVC CONDUIT FOR TEMPORARY ABOVE GRADE CONNECTIONS
   - 2000 LF L–824, #8 5KV TYPE C CABLE FOR TEMPORARY CONNECTIONS
   - 50 EACH L–823 CONNECTOR KITS
4. THE CONTRACTOR SHALL MAINTAIN QUALIFIED PERSONNEL, WITH THE APPROPRIATE EQUIPMENT, FOR THE INSTALLATION AND SPLICING OF AIRFIELD LIGHTING AND FIBER OPTIC CABLES. SUCH PERSONNEL SHALL BE CAPABLE OF 60 MINUTE RESPONSE TIME IF THEY ARE NOT ALREADY PRESENT ON THE AIRFIELD.
5. CONTRACTOR SHALL COORDINATE ALL WORK WITH AIRPORT MAINTENANCE, AIRPORT OPERATIONS, AND THE ENGINEER AS NECESSARY.
6. CONTRACTOR SHALL GIVE 48 HOURS NOTICE PRIOR TO WORKING ON OR AROUND ANY FAA EQUIPMENT, DUCT BANKS, HANDHOLES, ETC.
7. ALL TEMPORARY JUMPERS SHALL BE INSTALLED PRIOR TO THE START OF ANY DEMOLITION, SEE E0 SERIES DRAWINGS.

SYMBOL LIST

- E — E — NEW 2" PVC CONDUIT, CONCRETE ENCASED UNDER FULL STRENGTH PAVEMENT, DIRECT BURIED ELSEWHERE (UNLESS OTHERWISE NOTED). SEE E4 SERIES SHEETS FOR CIRCUIT INFORMATION.
- 4–4" X.X. (N)POWER (N) 56 — NEW DUCT [X.X. = D.B. (DIRECT BURIED), C.E. (CONCRETE ENCASED)] WITH DUCT CONFIGURATION AND CIRCUIT FILL INFORMATION. SEE SHEET E3.6 FOR DUCT SECTIONS. SEE E4 SERIES SHEETS FOR CIRCUIT INFORMATION.
- 4–4" BORE (N)POWER (N) 56 — DB — NEW DUCT (DIRECTIONAL BORE) WITH DUCT CONFIGURATION AND CIRCUIT FILL INFORMATION. SEE SHEET E3.6 FOR DUCT SECTIONS. SEE E4 SERIES SHEETS FOR CIRCUIT INFORMATION.
- 4–4" C.E. (E)POWER D111 — EXISTING DUCT SECTIONS (CONCRETE ENCASED) AND CIRCUIT FILLS. U.O.N. EXISTING DUCT HAS EXISTING CIRCUITS IN IT. SEE E4 SERIES SHEETS FOR CIRCUIT INFORMATION.
- E — E — EXISTING CONDUIT.
- —(R)— —(R)— CONDUIT OR DUCT TO BE REMOVED
- FAA FAA CONDUIT OR DUCT
- EXISTING MANHOLE
- RP NEW CONCRETE HANDHOLE AND ADJOINING JUNCTION CAN PLAZA
- EXISTING CONCRETE HANDHOLE
- AIRFIELD GUIDANCE SIGN
- WINDCONE
- Y C — L–850C IN–PAVEMENT BI–DIRECTIONAL RUNWAY EDGE LIGHT WITH OPTICAL SYSTEM COLOR FILTERS AS SHOWN (Y=YELLOW/AMBER, C=CLEAR/WHITE)
- C Y — L–862 ELEVATED BI–DIRECTIONAL RUNWAY EDGE LIGHT WITH OPTICAL SYSTEM COLOR FILTERS AS SHOWN (C=CLEAR/WHITE, Y=YELLOW/AMBER)
- G R — L–862E ELEVATED BI–DIRECTIONAL RUNWAY THRESHOLD/END LIGHT WITH OPTICAL SYSTEM COLOR FILTERS AS SHOWN (G=GREEN, R=RED)
- C R — L–850A IN–PAVEMENT BI–DIRECTIONAL RUNWAY CENTERLINE LIGHT WITH OPTICAL SYSTEM COLOR FILTERS AS SHOWN (C=CLEAR/WHITE, R=RED)
- L–850B IN–PAVEMENT UNIDIRECTIONAL RUNWAY TOUCHDOWN ZONE LIGHT
- L–861 ELEVATED BI–DIRECTIONAL RUNWAY EDGE LIGHT
- L–861SE ELEVATED RUNWAY THRESHOLD/END LIGHT
- L–861T ELEVATED OMNI–DIRECTIONAL MEDIUM INTENSITY T/W EDGE LIGHT, BLUE GLOBE UNLESS OTHERWISE NOTED
- X — L–852A IN–PAVEMENT BI–DIRECTIONAL TAXIWAY CENTERLINE LIGHT (NARROW BEAM) WITH OPTICAL SYSTEM COLOR FILTERS AS NOTED ON DATA TABLE
- L–852S IN–PAVEMENT UNIDIRECTIONAL STOP BAR LIGHT WITH RED OPTICAL LENS.
- B — BLANK LOAD RATED COVER ON L–868 BASE
- B — BLANK COVER ON L–867B LIGHT BASE OR L–867D BASE JUNCTION CAN
- 2–INCH CONDUIT STUB UP FOR TEMPORARY L–861 LIGHT.

CITY OF SAN ANTONIO AVIATION DEPARTMENT

SAN ANTONIO AIRPORT SYSTEM

Kimley»Horn
KIMLEY–HORN AND ASSOCIATES, INC.
601 NW LOOP 410, SUITE 350
SAN ANTONIO, TEXAS 78216
PHONE: (210) 541–9166
TEXAS REGISTERED FIRM, NO. 928

RUNWAY 12R-30L ELECTRICAL IMPROVEMENTS AND TERMINAL AREA TAXIWAY IMPROVEMENTS (PACKAGE 4)

STATE OF TEXAS — ERIC C. LOVEJOY — 84081 — LICENSED PROFESSIONAL ENGINEER — 2016

MARK	DATE	DESCRIPTION

ISSUE:	---
PROJECT NO:	33-0019X
FILE NAME:	_33-00193-R1EC-001
DRAWN BY:	CMP
CHECKED BY:	ECL
COPYRIGHT:	2016

SHEET TITLE:

ELECTRICAL SYMBOL LIST AND GENERAL NOTES

E0.2

K:\REN_Aviation\191629001-SAT Rwy & Twy Improvements\05 CADD_PACKAGE 4_33-00193-R1EC-001.dwg October 28, 2015 Peterson, Cary

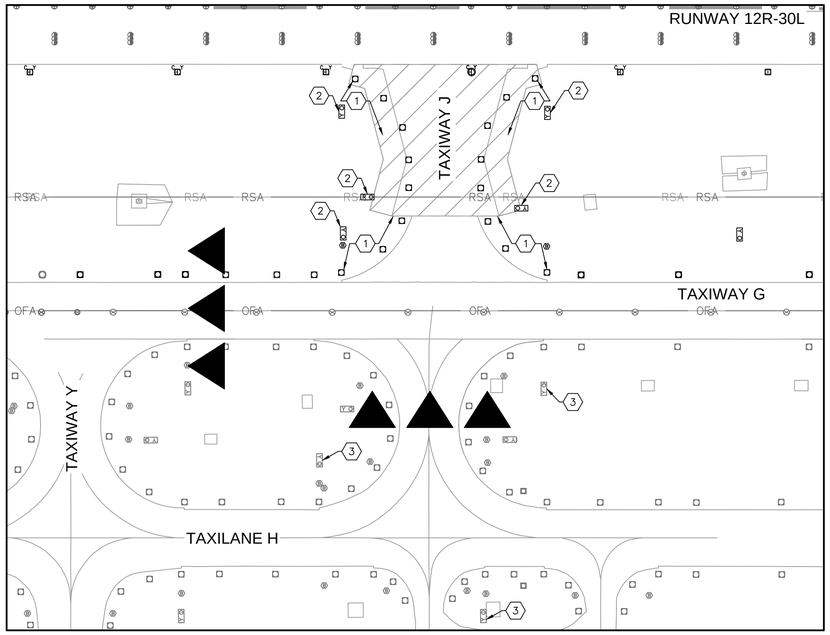

TEMPORARY AIRFIELD ELECTRICAL DURING CIVIL CONSTRUCTION ON TAXIWAY J

100 0 100 200
SCALE IN FEET

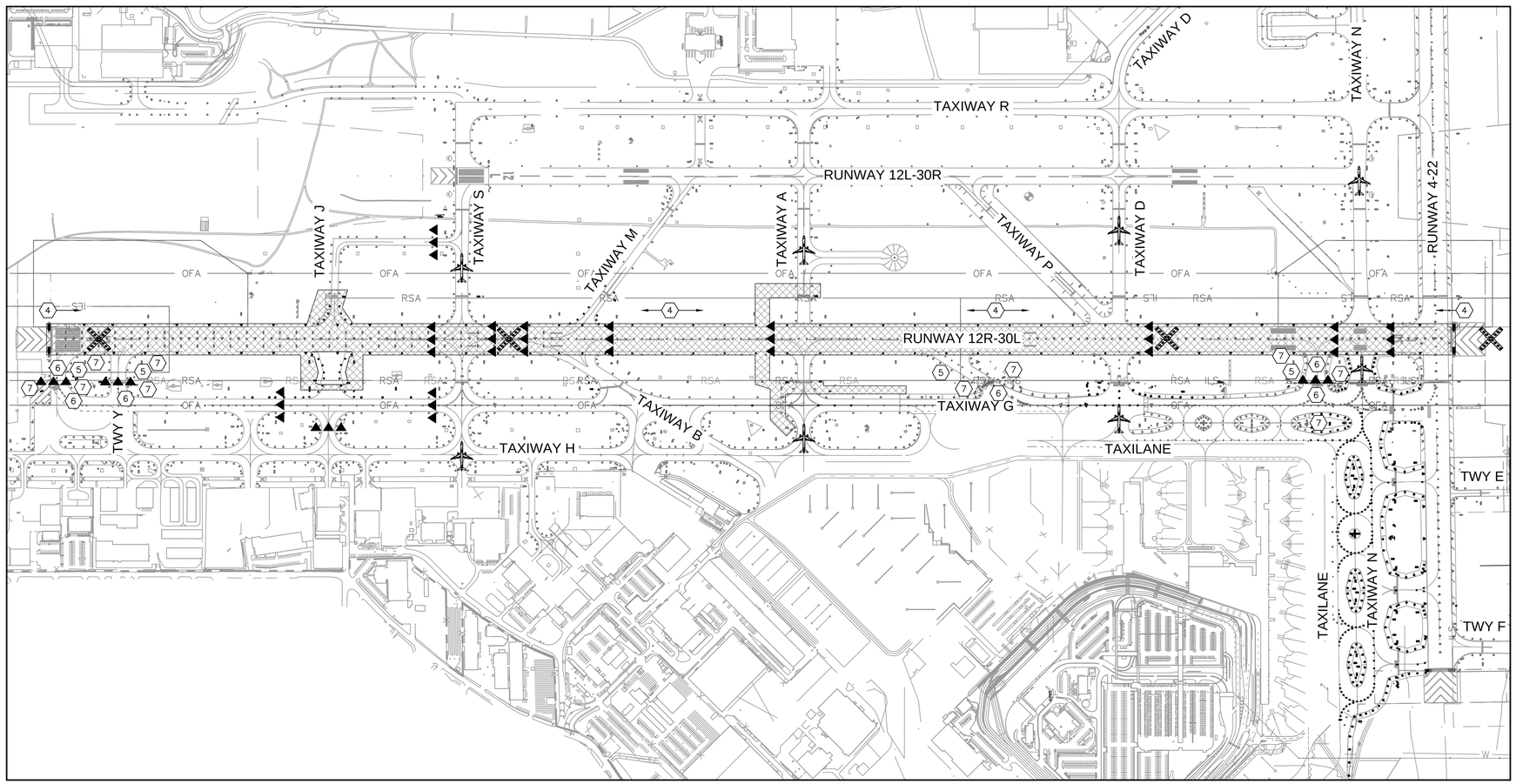

LINKED LOW LEVEL BARRICADES, SEE CIVIL DRAWINGS

TAXIING AIRCRAFT

PORTABLE LIGHTED RUNWAY CLOSURE MARKER, SEE CIVIL DRAWINGS

PACKAGE 4 – BASE BID (CIVIL)

PACKAGE 4 – BASE BID (ELECTRICAL)

GENERAL NOTES:

1. TEMPORARY CIRCUITS ARE TO BE INSTALLED AS NECESSARY TO MAINTAIN THE OPEN PORTIONS OF THE AIRFIELD.
2. SEE CIRCUIT MAPS ON E4 SERIES DRAWINGS FOR ADDITIONAL INFORMATION.
3. CONTRACTOR IS TO COORDINATE ALL POWER OR LIGHTING OUTAGES WITH SAT OPERATIONS PRIOR TO ANY WORK.
4. SEE E5 SERIES FOR SIGNS THAT ARE TO BE COVERED DURING CONSTRUCTION.
5. COORDINATE WITH CONSTRUCTION PHASING PLANS, C2 SERIES DRAWINGS.

CONSTRUCTION NOTES (TAXIWAY J):

1. COVER ELEVATED TAXIWAY EDGE LIGHTS ALONG TWY 'J' BETWEEN TWY 'G' AND RUNWAY 12R–30L WITH PVC PIPE SECTIONS, SEE DETAIL ON SHEET E3.10.
2. COVER SIGN, SEE DETAIL ON SHEET E3.1.
3. PARTIALLY COVER SIGN, SEE DETAIL ON SHEET E3.1.

CONSTRUCTION NOTES (RUNWAY 12R-30L):

4. TURN OFF RUNWAY LIGHTING CIRCUITS:
   12R–30L EDGE – CKT 31
   12R CENTERLINE – CKT 30
   30L CENTERLINE – CKT 32
   12R TDZ – CKT 33
5. COVER ELEVATED TAXIWAY EDGE LIGHTS LEADING TO RUNWAY 12R–30L EXCEPT FOR THOSE TAXIWAYS IN USE TO CROSS THE RUNWAY, COORDINATE WITH OPERATIONS, SEE DETAIL ON SHEET E3.10.
6. COVER LENSES OF CENTERLINE LIGHTS ON TAXIWAYS LEADING TO RUNWAY 12R–30L EXCEPT FOR THOSE TAXIWAYS IN USE TO CROSS THE RUNWAY, COORDINATE WITH OPERATIONS. SEE LENS COVER NOTES ON THIS SHEET.
7. COVER SIGNS LEADING TO RUNWAY 12R–30L, SEE DETAIL ON SHEET E3.1.

LENS COVER NOTES:

1. COVER LENS WITH MATTE FINISH, VINYL COATED, NO–RESIDUE GAFFER'S TAPE, COLOR BLACK, 2" WIDE (3M MODEL 6910 OR EQUAL). CONTRACTOR TO SUBMIT SAMPLE OF PROPOSED TAPE FOR ENGINEER'S REVIEW.
2. LENS COVERING SHALL SEAL AROUND THE LENS AND EXTEND 2" MINIMUM BEYOND THE LENS ONTO THE FIXTURE BODY. LENS COVERING SHALL BLOCK ALL LIGHT EMANATING FROM THE FIXTURE.
3. CONTRACTOR SHALL CLEAN ANY ADHESIVE RESIDUE OFF THE LENSES OF TEMPORARY COVERED CENTERLINE LIGHTS. CLEANING SHALL BE PER MANUFACTURER'S RECOMMENDATIONS AND TO THE SATISFACTION OF THE OWNER.

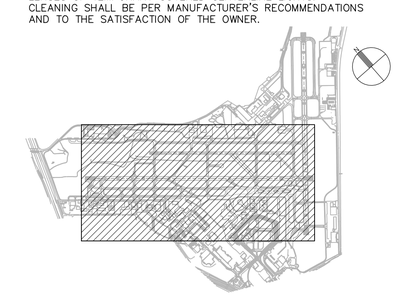

400 0 400 800
SCALE IN FEET

CITY OF
SAN ANTONIO
AVIATION
DEPARTMENT

SAN ANTONIO AIRPORT SYSTEM

Kimley»Horn

KIMLEY–HORN AND ASSOCIATES, INC.
601 NW LOOP 410, SUITE 350
SAN ANTONIO, TEXAS 78216
PHONE: (210) 541–9166

TEXAS REGISTERED FIRM,
NO. 928

RUNWAY 12R-30L ELECTRICAL IMPROVEMENTS AND TERMINAL AREA TAXIWAY IMPROVEMENTS (PACKAGE 4)

STATE OF TEXAS
ERIC C. LOVEJOY
84081
LICENSED
PROFESSIONAL ENGINEER
5/5/16

MARK	DATE	DESCRIPTION

ISSUE:	---
PROJECT NO:	33-0019X
FILE NAME:	_33-00193-R1ET-400
DRAWN BY:	CMP
CHECKED BY:	ECL
COPYRIGHT:	2016

SHEET TITLE:

TEMPORARY AIRFIELD ELECTRICAL - BASE BID

E0.3

K:\REN_Aviation\191629001-SAT Rwy & Twy Improvements\05 CADD_PACKAGE 4_33-00193-R1ET-400.dwg October 28, 2015 Peterson, Cary

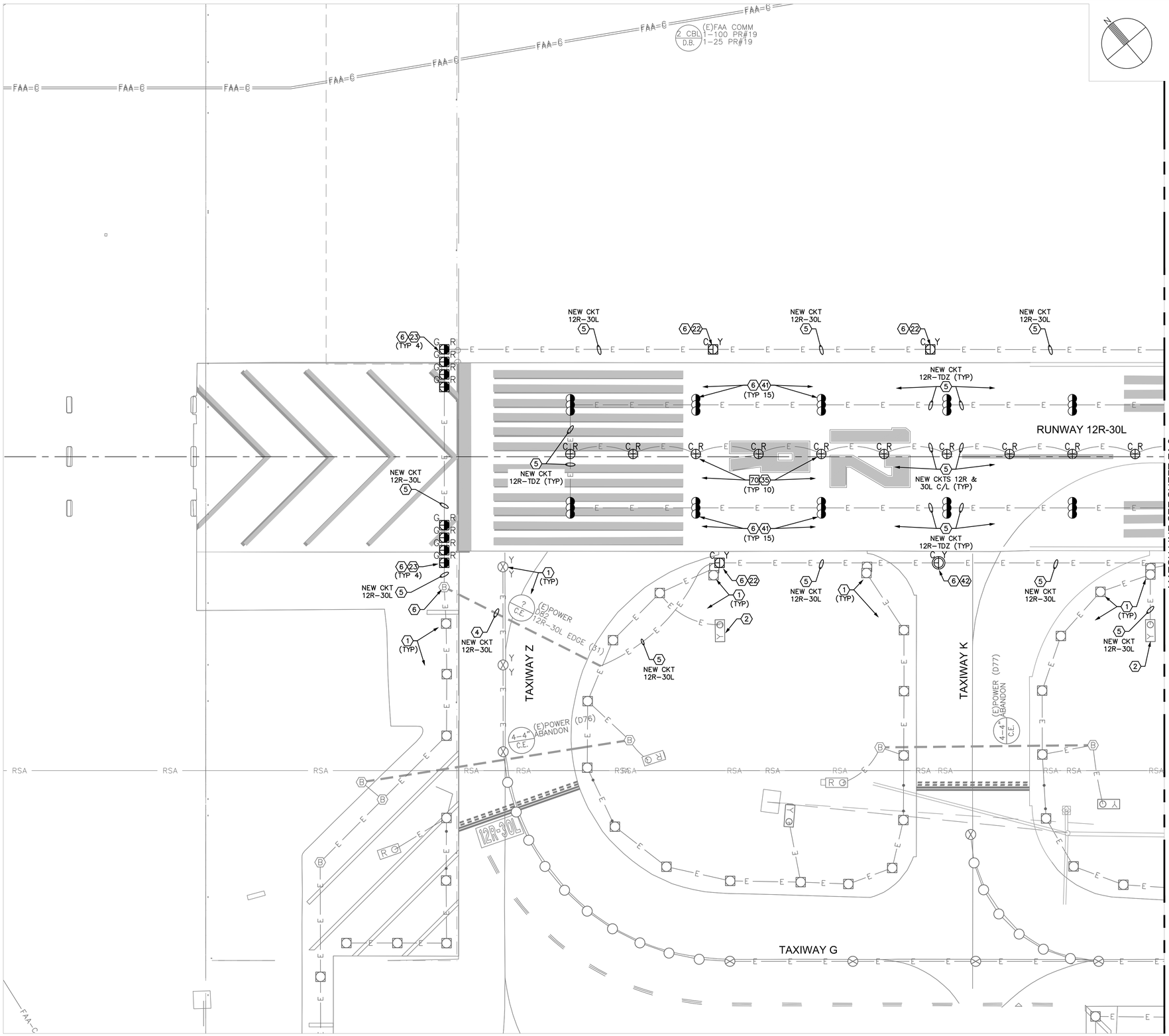

FIXTURE, SIGN & CIRCUIT CONSTRUCTION NOTES

1. EXISTING LIGHT, PROTECT IN PLACE.
2. EXISTING SIGN, PROTECT IN PLACE.
4. EXISTING DUCT, PROTECT IN PLACE. IF NOTED INSTALL NEW CONDUCTOR(S) AS INDICATED. SEE E4 SERIES CIRCUIT MAPS.
5. EXISTING CONDUIT, PROTECT IN PLACE. IF NOTED INSTALL NEW CONDUCTOR(S) AS INDICATED. SEE E4 SERIES CIRCUIT MAPS.
6. EXISTING BASE CAN, PROTECT IN PLACE.
22. REINSTALL SALVAGED L-862 RUNWAY EDGE LIGHT WITH NEW L-830.
23. REINSTALL SALVAGED L-862E RUNWAY THRESHOLD/END LIGHT WITH NEW L-830.
35. NEW L-850A RUNWAY CENTERLINE LIGHT WITH (2) NEW 100 W, 20A L-830S.
41. REINSTALL SALVAGED EXISTING L-850B RUNWAY TOUCH DOWN ZONE (TDZ) LIGHT WITH NEW 100 W, 20A L-830.
42. REINSTALL SALVAGED EXISTING L-850C RUNWAY EDGE LIGHT WITH NEW 100 W, 20A L-830.

BASE CAN, FOUNDATION & CONDUIT NOTES

70. MODIFY OR REPLACE EXISTING L-868B BASE CAN FOR IN-PAVEMENT RUNWAY CENTERLINE LIGHT, SEE DETAILS ON DRAWING E3.2. APPLIES TO ALL RUNWAY CENTERLINE BASES WEST OF TAXIWAY B AND OTHERS AS DIRECTED BY THE OWNER.

GENERAL NOTES

1. SEE E0 SERIES DRAWINGS FOR TEMPORARY CIRCUITS AND FIXTURES.
2. SEE CIRCUIT MAPS E4 SERIES DRAWINGS FOR NEW OR MODIFIED CIRCUITS.
3. SEE E6 SERIES DRAWINGS FOR ELECTRICAL DEMOLITION PLANS.
4. SEE DRAWING E3.6 FOR DUCT CONFIGURATIONS AND INSTALLATION DETAILS.

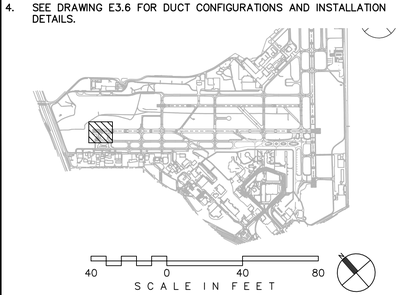

CITY OF SAN ANTONIO AVIATION DEPARTMENT

SAN ANTONIO AIRPORT SYSTEM

Kimley»Horn

KIMLEY-HORN AND ASSOCIATES, INC.
601 NW LOOP 410, SUITE 350
SAN ANTONIO, TEXAS 78216
PHONE: (210) 541-9166

TEXAS REGISTERED FIRM, NO. 928

RUNWAY 12R-30L ELECTRICAL IMPROVEMENTS AND TERMINAL AREA TAXIWAY IMPROVEMENTS (PACKAGE 4)

STATE OF TEXAS
ERIC C. LOVEJOY
84081
LICENSED
PROFESSIONAL ENGINEER
5/16/16

MARK	DATE	DESCRIPTION

ISSUE:	---
PROJECT NO:	33-0019X
FILE NAME:	_33-00193-R1EE-101
DRAWN BY:	CMP
CHECKED BY:	ECL
COPYRIGHT:	2016

SHEET TITLE:

ELECTRICAL LAYOUT PLAN - BASE BID

E1.1

SHEET NO. 38 OF 157

K:\REN_Aviation\191629001-SAT Rwy & Twy Improvements\05 CADD_PACKAGE 4_33-00193-R1EE-101.dwg October 28, 2015 Peterson, Cory

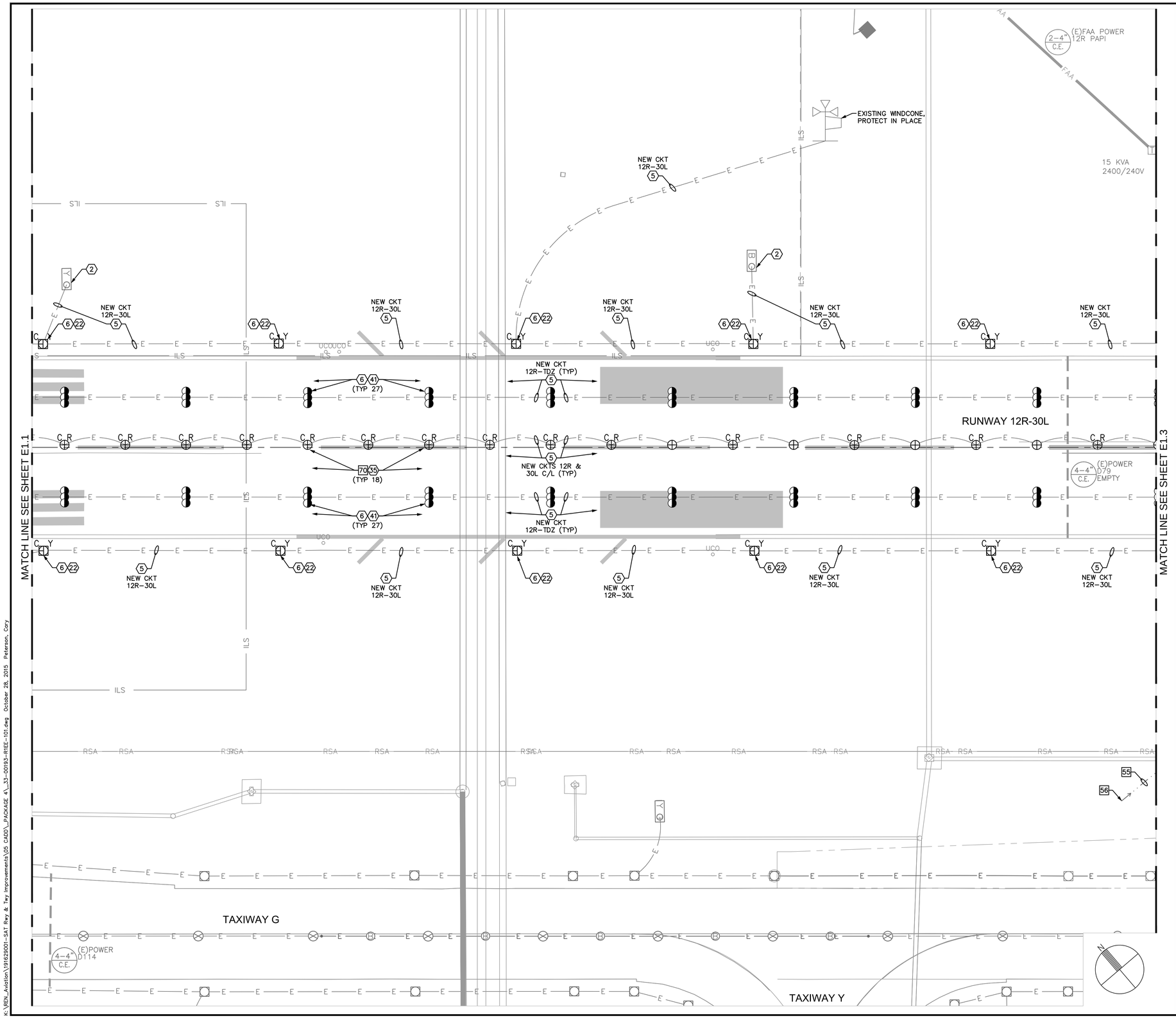

FIXTURE, SIGN & CIRCUIT CONSTRUCTION NOTES

(2) EXISTING SIGN, PROTECT IN PLACE.

(5) EXISTING CONDUIT, PROTECT IN PLACE. IF NOTED INSTALL NEW CONDUCTOR(S) AS INDICATED. SEE E4 SERIES CIRCUIT MAPS.

(6) EXISTING BASE CAN, PROTECT IN PLACE.

(22) REINSTALL SALVAGED L-862 RUNWAY EDGE LIGHT WITH NEW L-830.

(35) NEW L-850A RUNWAY CENTERLINE LIGHT WITH (2) NEW 100 W, 20A L-830S.

(41) REINSTALL SALVAGED EXISTING L-850B RUNWAY TOUCH DOWN ZONE (TDZ) LIGHT WITH NEW 100 W, 20A L-830.

BASE CAN, FOUNDATION & CONDUIT NOTES

55 NEW 2"C (ITEM L-110) TO DRAIN STRUCTURES. COMBINE DRAIN CONDUITS FROM SEPARATE SYSTEMS INTO COMMON TRENCH WHEN POSSIBLE. SEE DETAILS ON DRAWING E3.10.

56 STUB AND CAP 2"C FOR CONNECTION IN FUTURE PHASE. RECORD STATION, OFFSET AND DEPTH ON RECORD DRAWINGS.

70 MODIFY OR REPLACE EXISTING L-868B BASE CAN FOR IN-PAVEMENT RUNWAY CENTERLINE LIGHT, SEE DETAILS ON DRAWING E3.2. APPLIES TO ALL RUNWAY CENTERLINE BASES WEST OF TAXIWAY B AND OTHERS AS DIRECTED BY THE OWNER.

GENERAL NOTES

1. SEE E0 SERIES DRAWINGS FOR TEMPORARY CIRCUITS AND FIXTURES.
2. SEE CIRCUIT MAPS E4 SERIES DRAWINGS FOR NEW OR MODIFIED CIRCUITS.
3. SEE E6 SERIES DRAWINGS FOR ELECTRICAL DEMOLITION PLANS.
4. SEE DRAWING E3.6 FOR DUCT CONFIGURATIONS AND INSTALLATION DETAILS.

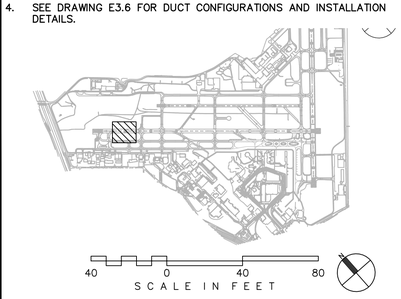

CITY OF SAN ANTONIO AVIATION DEPARTMENT

SAN ANTONIO AIRPORT SYSTEM

Kimley»Horn
KIMLEY-HORN AND ASSOCIATES, INC.
601 NW LOOP 410, SUITE 350
SAN ANTONIO, TEXAS 78216
PHONE: (210) 541-9166
TEXAS REGISTERED FIRM, NO. 928

RUNWAY 12R-30L ELECTRICAL IMPROVEMENTS AND TERMINAL AREA TAXIWAY IMPROVEMENTS (PACKAGE 4)

STATE OF TEXAS
ERIC G. LOVEJOY
84081
LICENSED
PROFESSIONAL ENGINEER
6/16/16

MARK	DATE	DESCRIPTION

ISSUE:	----
PROJECT NO:	33-0019X
FILE NAME:	_33-00193-R1EE-101
DRAWN BY:	CMP
CHECKED BY:	ECL
COPYRIGHT:	2016

SHEET TITLE:

ELECTRICAL LAYOUT PLAN - BASE BID

E1.2

K:\REN_Aviation\191629001-SAT Rwy & Twy Improvements\05 CADD_PACKAGE 4_33-00193-R1EE-101.dwg October 28, 2015 Peterson, Cary

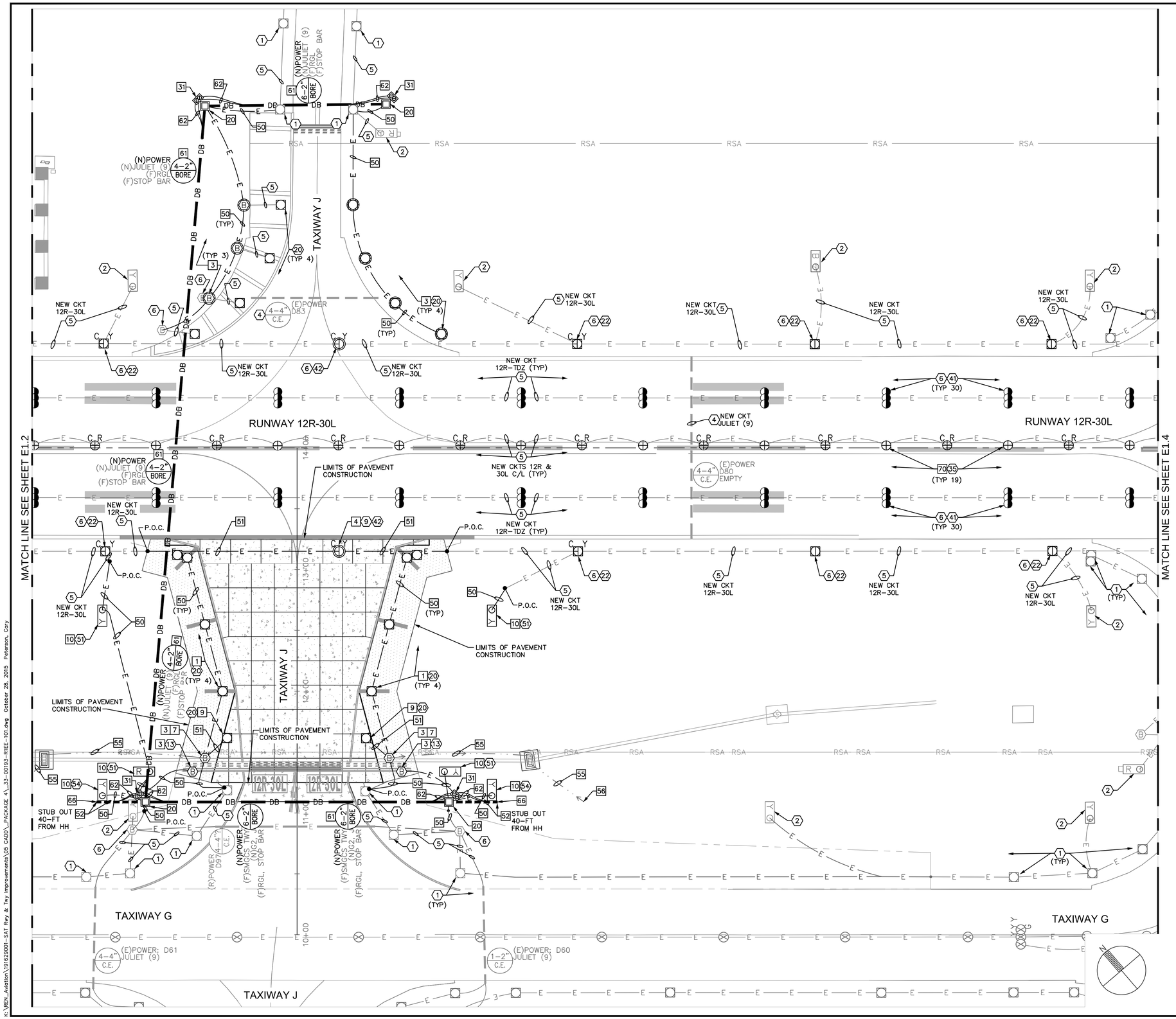

FIXTURE, SIGN & CIRCUIT CONSTRUCTION NOTES

1. EXISTING LIGHT, PROTECT IN PLACE.
2. EXISTING SIGN, PROTECT IN PLACE.
4. EXISTING DUCT, PROTECT IN PLACE. IF NOTED INSTALL NEW CONDUCTOR(S) AS INDICATED. SEE E4 SERIES CIRCUIT MAPS.
5. EXISTING CONDUIT, PROTECT IN PLACE. IF NOTED INSTALL NEW CONDUCTOR(S) AS INDICATED. SEE E4 SERIES CIRCUIT MAPS.
6. EXISTING BASE CAN, PROTECT IN PLACE.
9. CONTRACTOR SHALL FIELD SURVEY THE LOCATION OF THE TO-BE-REMOVED FIXTURE PRIOR TO DEMOLITION. INSTALL THE NEW BASE CAN AT THE EXISTING LOCATION.
13. FURNISH AND INSTALL BLANK COVER: FUTURE L-804 RUNWAY GUARD LIGHT.
20. REINSTALL SALVAGED L-861T QUARTZ TAXIWAY EDGE LIGHT WITH NEW 35/45W L-830.
22. REINSTALL SALVAGED L-862 RUNWAY EDGE LIGHT WITH NEW L-830.
35. NEW L-850A RUNWAY CENTERLINE LIGHT WITH (2) NEW 100 W, 20A L-830S.
41. REINSTALL SALVAGED EXISTING L-850B RUNWAY TOUCH DOWN ZONE (TDZ) LIGHT WITH NEW 100 W, 20A L-830.
42. REINSTALL SALVAGED EXISTING L-850C RUNWAY EDGE LIGHT WITH NEW 100 W, 20A L-830.
51. NEW SIZE 3 SIGN AND L-830 ON NEW CONCRETE FOUNDATION.
54. NEW SIZE 3 SIGN WITH NEW L-830 IN LATER NUMBERED ALTERNATE BID OR IN THE FUTURE.

BASE CAN, FOUNDATION & CONDUIT NOTES

1. NEW L-867 BASE CAN IN NEW ASPHALT PAVEMENT.
3. NEW L-867 BASE CAN IN UN-PAVED SHOULDER.
4. NEW L-868 BASE CAN IN NEW PCC PAVEMENT.
7. NEW 3/8" BLANK COVER ON NEW OR EXISTING L-867 BASE CAN.
9. NEW 2" STUB-UP FOR TEMPORARY EDGE LIGHT. INSTALL L-830 IN ADJACENT L-867. SEE DETAIL ON DRAWING E3.4.
10. NEW CONCRETE SIGN FOUNDATION. SEE DATA TABLES IN E2 SERIES DRAWINGS FOR LOCATION & DETAIL DATA.
20. NEW PRECAST CONCRETE HANDHOLE. SEE DATA TABLES IN E2 SERIES DRAWINGS FOR LOCATION & DETAIL DATA.
31. NEW 2-CAN JUNCTION CAN PLAZA, SEE DETAILS ON DRAWING E3.8.
50. NEW 1-2"PVC, D.B. (ITEM L-110). NEW CONDUCTORS (ITEM L-108).
51. NEW 1-2"PVC, C.E. (ITEM L-110). NEW CONDUCTORS (ITEM L-108).
52. NEW DUCT, D.B. (ITEM L-110). NEW CONDUCTORS (ITEM L-108).
55. NEW 2"C (ITEM L-110) TO DRAIN STRUCTURES. COMBINE DRAIN CONDUITS FROM SEPARATE SYSTEMS INTO COMMON TRENCH WHEN POSSIBLE. SEE DETAILS ON DRAWING E3.10.
56. STUB AND CAP 2"C FOR CONNECTION IN FUTURE PHASE. RECORD STATION, OFFSET AND DEPTH ON RECORD DRAWINGS.
61. DIRECTIONAL BORE HDPE DUCT UNDER EXISTING PAVEMENT: MINIMUM 36-INCHES BELOW PAVEMENT SURFACE.
62. NEW 1-2"HDPE (OR PVC WITH HDPE TRANSITION), D.B. (ITEM L-110). NEW CONDUCTORS (ITEM L-108).
66. STUB AND CAP DUCT FOR FUTURE EXTENSION. RECORD STATION, OFFSET AND DEPTH ON RECORD DRAWINGS. INSTALL CONCRETE DUCT MARKER PER SPECIFICATIONS.
70. MODIFY OR REPLACE EXISTING L-868B BASE CAN FOR IN-PAVEMENT RUNWAY CENTERLINE LIGHT, SEE DETAILS ON DRAWING E3.2. APPLIES TO ALL RUNWAY CENTERLINE BASES WEST OF TAXIWAY B AND OTHERS AS DIRECTED BY THE OWNER.

GENERAL NOTES

1. SEE DRAWING E2.1 AND DATA TABLES FOR NEW FIXTURE, HANDHOLE, JUNCTION CAN, BASE CAN, AND SIGN FOUNDATION LOCATIONS.
2. SEE E0 SERIES DRAWINGS FOR TEMPORARY CIRCUITS AND FIXTURES.
3. SEE CIRCUIT MAPS E4 SERIES DRAWINGS FOR NEW OR MODIFIED CIRCUITS.
4. SEE E5 SERIES DRAWINGS FOR AIRFIELD SIGN LEGENDS.
5. SEE E6 SERIES DRAWINGS FOR ELECTRICAL DEMOLITION PLANS.
6. SEE DRAWING E3.6 FOR DUCT CONFIGURATIONS AND INSTALLATION DETAILS.

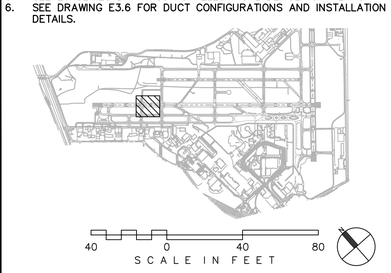

CITY OF SAN ANTONIO AVIATION DEPARTMENT

SAN ANTONIO AIRPORT SYSTEM

Kimley»Horn

KIMLEY-HORN AND ASSOCIATES, INC.
601 NW LOOP 410, SUITE 350
SAN ANTONIO, TEXAS 78216
PHONE: (210) 541-9166

TEXAS REGISTERED FIRM, NO. 928

RUNWAY 12R-30L ELECTRICAL IMPROVEMENTS AND TERMINAL AREA TAXIWAY IMPROVEMENTS (PACKAGE 4)

STATE OF TEXAS
ERIC G. LOVEJOY
84081
LICENSED
PROFESSIONAL ENGINEER
6/30/16

MARK	DATE	DESCRIPTION

ISSUE:	---
PROJECT NO:	33-0019X
FILE NAME:	_33-00193-R1EE-101
DRAWN BY:	CMP
CHECKED BY:	ECL
COPYRIGHT:	2016

SHEET TITLE:

ELECTRICAL LAYOUT PLAN - BASE BID

E1.3

K:\REN_Aviation\191629001-SAT Rwy & Twy Improvements\05 CADD_PACKAGE 4_33-00193-R1EE-101.dwg October 28, 2015 Peterson, Cary

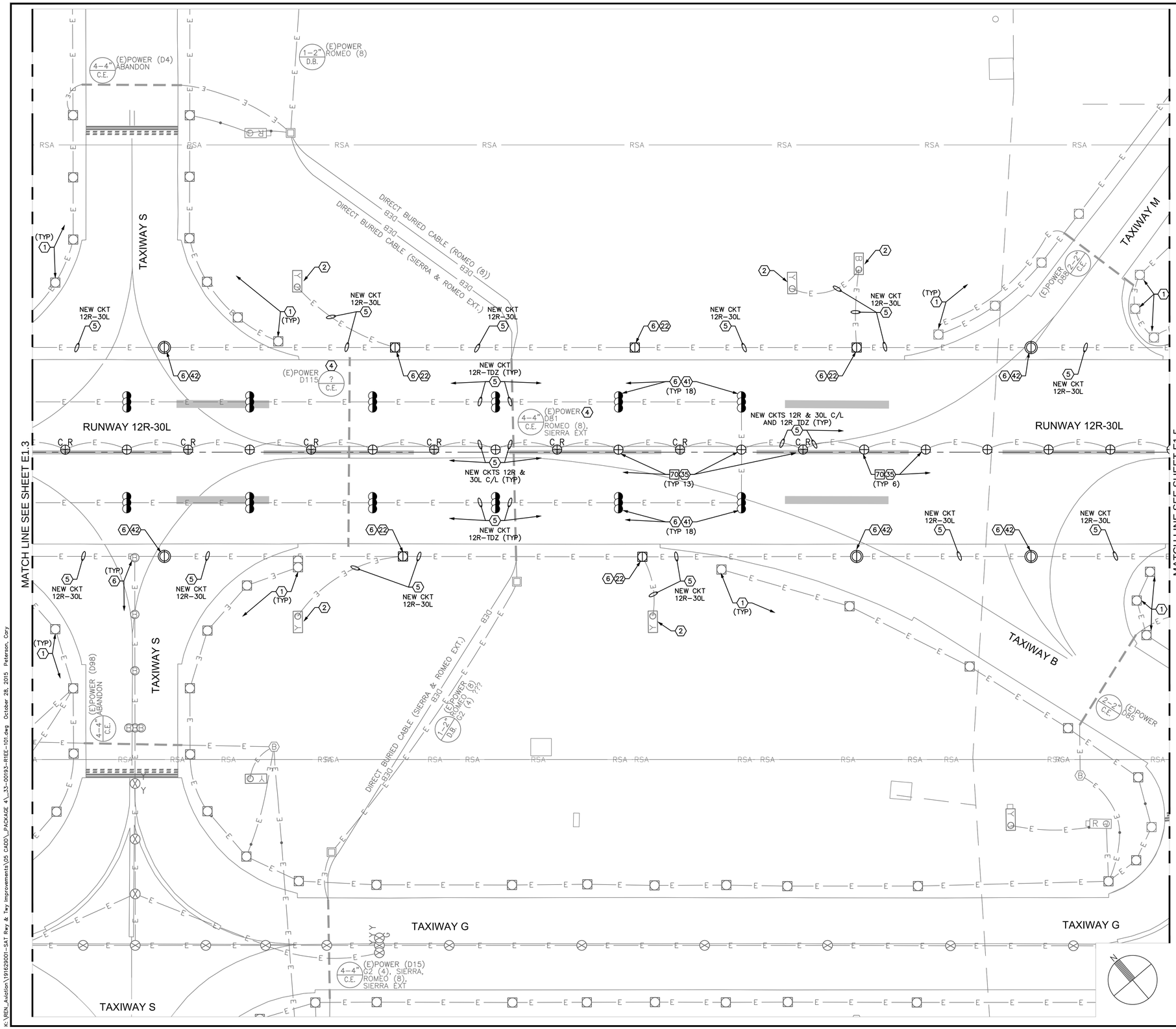

FIXTURE, SIGN & CIRCUIT CONSTRUCTION NOTES

1. EXISTING LIGHT, PROTECT IN PLACE.
2. EXISTING SIGN, PROTECT IN PLACE.
4. EXISTING DUCT, PROTECT IN PLACE. IF NOTED INSTALL NEW CONDUCTOR(S) AS INDICATED. SEE E4 SERIES CIRCUIT MAPS.
5. EXISTING CONDUIT, PROTECT IN PLACE. IF NOTED INSTALL NEW CONDUCTOR(S) AS INDICATED. SEE E4 SERIES CIRCUIT MAPS.
6. EXISTING BASE CAN, PROTECT IN PLACE.
22. REINSTALL SALVAGED L-862 RUNWAY EDGE LIGHT WITH NEW L-830.
35. NEW L-850A RUNWAY CENTERLINE LIGHT WITH (2) NEW 100 W, 20A L-830S.
41. REINSTALL SALVAGED EXISTING L-850B RUNWAY TOUCH DOWN ZONE (TDZ) LIGHT WITH NEW 100 W, 20A L-830.
42. REINSTALL SALVAGED EXISTING L-850C RUNWAY EDGE LIGHT WITH NEW 100 W, 20A L-830.

BASE CAN, FOUNDATION & CONDUIT NOTES

70. MODIFY OR REPLACE EXISTING L-868B BASE CAN FOR IN-PAVEMENT RUNWAY CENTERLINE LIGHT, SEE DETAILS ON DRAWING E3.2. APPLIES TO ALL RUNWAY CENTERLINE BASES WEST OF TAXIWAY B AND OTHERS AS DIRECTED BY THE OWNER.

GENERAL NOTES

1. SEE E0 SERIES DRAWINGS FOR TEMPORARY CIRCUITS AND FIXTURES.
2. SEE CIRCUIT MAPS E4 SERIES DRAWINGS FOR NEW OR MODIFIED CIRCUITS.
3. SEE E6 SERIES DRAWINGS FOR ELECTRICAL DEMOLITION PLANS.
4. SEE DRAWING E3.6 FOR DUCT CONFIGURATIONS AND INSTALLATION DETAILS.

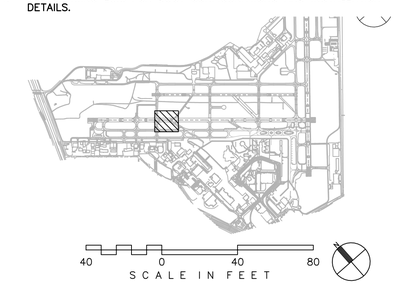

CITY OF SAN ANTONIO AVIATION DEPARTMENT

SAN ANTONIO AIRPORT SYSTEM

Kimley»Horn

KIMLEY-HORN AND ASSOCIATES, INC.
601 NW LOOP 410, SUITE 350
SAN ANTONIO, TEXAS 78216
PHONE: (210) 541-9166
TEXAS REGISTERED FIRM, NO. 928

RUNWAY 12R-30L ELECTRICAL IMPROVEMENTS AND TERMINAL AREA TAXIWAY IMPROVEMENTS (PACKAGE 4)

STATE OF TEXAS
ERIC C. LOVEJOY
84081
LICENSED
PROFESSIONAL ENGINEER
5/16

MARK	DATE	DESCRIPTION

ISSUE:	----
PROJECT NO:	33-0019X
FILE NAME:	_33-00193-R1EE-101
DRAWN BY:	CMP
CHECKED BY:	ECL
COPYRIGHT:	2016

SHEET TITLE:

ELECTRICAL LAYOUT PLAN - BASE BID

E1.4

K:\REN_Aviation\191629001-SAT Rwy & Twy Improvements\05 CADD_PACKAGE 4_33-00193-R1EE-101.dwg October 28, 2015 Peterson, Cary

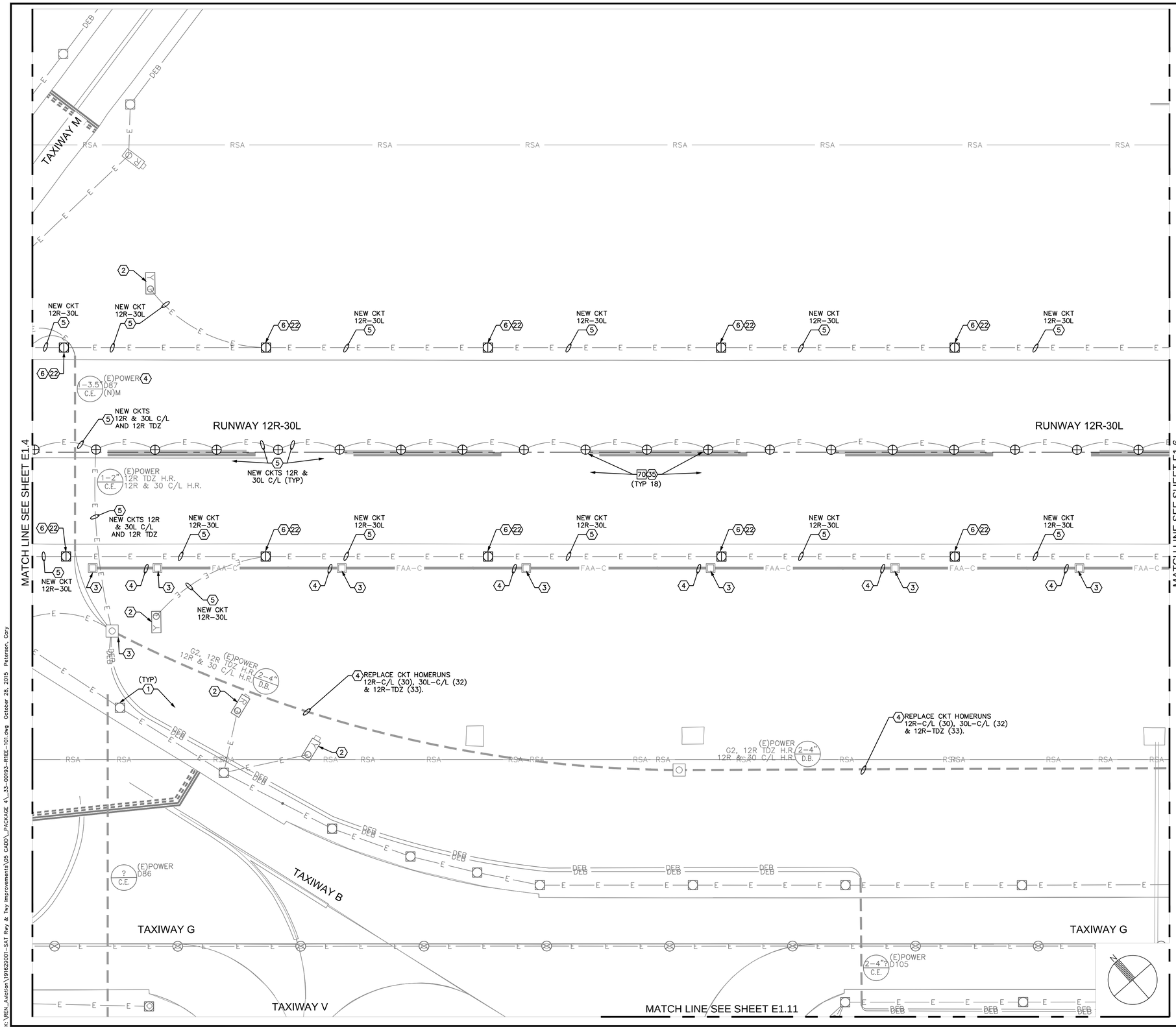

FIXTURE, SIGN & CIRCUIT CONSTRUCTION NOTES

1. EXISTING LIGHT, PROTECT IN PLACE.
2. EXISTING SIGN, PROTECT IN PLACE.
3. EXISTING MANHOLE, HANDHOLE OR PULLBOX, PROTECT IN PLACE.
4. EXISTING DUCT, PROTECT IN PLACE. IF NOTED INSTALL NEW CONDUCTOR(S) AS INDICATED. SEE E4 SERIES CIRCUIT MAPS.
5. EXISTING CONDUIT, PROTECT IN PLACE. IF NOTED INSTALL NEW CONDUCTOR(S) AS INDICATED. SEE E4 SERIES CIRCUIT MAPS.
6. EXISTING BASE CAN, PROTECT IN PLACE.
22. REINSTALL SALVAGED L–862 RUNWAY EDGE LIGHT WITH NEW L–830.
35. NEW L–850A RUNWAY CENTERLINE LIGHT WITH (2) NEW 100 W, 20A L–830S.

BASE CAN, FOUNDATION & CONDUIT NOTES

70. MODIFY OR REPLACE EXISTING L–868B BASE CAN FOR IN–PAVEMENT RUNWAY CENTERLINE LIGHT. SEE DETAILS ON DRAWING E3.2. APPLIES TO ALL RUNWAY CENTERLINE BASES WEST OF TAXIWAY B AND OTHERS AS DIRECTED BY THE OWNER.

GENERAL NOTES

1. SEE E0 SERIES DRAWINGS FOR TEMPORARY CIRCUITS AND FIXTURES.
2. SEE CIRCUIT MAPS E4 SERIES DRAWINGS FOR NEW OR MODIFIED CIRCUITS.
3. SEE E6 SERIES DRAWINGS FOR ELECTRICAL DEMOLITION PLANS.
4. SEE DRAWING E3.6 FOR DUCT CONFIGURATIONS AND INSTALLATION DETAILS.

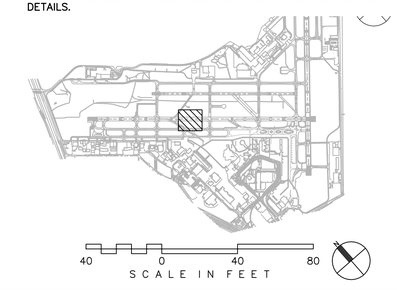

CITY OF SAN ANTONIO AVIATION DEPARTMENT

SAN ANTONIO AIRPORT SYSTEM

Kimley»Horn

KIMLEY–HORN AND ASSOCIATES, INC.
601 NW LOOP 410, SUITE 350
SAN ANTONIO, TEXAS 78216
PHONE: (210) 541–9166

TEXAS REGISTERED FIRM, NO. 928

RUNWAY 12R-30L ELECTRICAL IMPROVEMENTS AND TERMINAL AREA TAXIWAY IMPROVEMENTS (PACKAGE 4)

STATE OF TEXAS
ERIC C. LOVEJOY
84081
LICENSED
PROFESSIONAL ENGINEER
5/11/16

MARK	DATE	DESCRIPTION

ISSUE:	----
PROJECT NO:	33-0019X
FILE NAME:	_33-00193-R1EE-101
DRAWN BY:	CMP
CHECKED BY:	ECL
COPYRIGHT:	2016

SHEET TITLE:

ELECTRICAL LAYOUT PLAN - BASE BID

E1.5

K:\REN_Aviation\191629001–SAT Rwy & Twy Improvements\05 CADD_PACKAGE 4_33–00193–R1EE–101.dwg October 28, 2015 Peterson, Cary