In case of failure on the part of the Contractor to prevent and control soil erosion, sedimentation and water pollution which may degrade receiving water, the Engineer reserves the right to employ outside assistance or to use City forces to provide the necessary corrective measures. All costs including engineering costs will be deducted from any moneys due or to become due to the Contractor.

When the need for control measures can not be attributed to the contractor's negligence, carelessness, lack of maintenance or failure to install permanent water pollution control measures and these measures are shown on the plans and/or directed by the Engineer, these measures shall be measured and paid for in accordance with contract bid items shown under this section.

A. **Rock Filter Dams.** Installation or removal of rock filter dams will be measured by the foot or by the cubic yard. The measured volume will include sandbags, when used.

   1. **Linear Measurement.** When rock filter dams are measured by the foot, measurement will be along the centerline of the top of the dam.

   2. **Volume Measurement.** When rock filter dams are measured by the cubic yard, measurement will be based on the volume of rock computed by the method of average end areas.

      a. **Installation.** Measurement will be made in final position.

      b. **Removal.** Measurement will be made at the point of removal.

B. **Temporary Pipe Slope Drains.** Temporary pipe slope drains will be measured by the foot.

C. **Baled Hay.** Baled hay will be measured by each bale.

D. **Temporary Paved Flumes.** Temporary paved flumes will be measured by the square yard of surface area. The measured area will include the energy dissipater at the flume outlet.

E. **Construction Exits.** Construction exits will be measured by the square yard of surface area.

F. **Earthwork for Erosion and Sediment Control.** Earthwork for erosion and sediment control will not be measured directly but will be considered subsidiary to this or other pertinent items.

G. **Construction Perimeter Fence.** Construction perimeter fence will be measured by the foot.

H. **Sandbags for Erosion Control.** Sandbags will be measured as each sandbag or by the foot along the top of sandbag berms or dams.

I. **Temporary Sediment-Control Fence.** Temporary sediment-control fence will be measured by the foot.

J. **Curb Inlet Gravel Filter.** Curb inlet gravel filter will be measured by the linear foot, as measured on the centerline of the gravel bags installed.

540.6. PAYMENT: The following will not be paid for directly but are subsidiary to pertinent Items:

- erosion-control measures for Contractor project-specific locations (PSLs) inside and outside the right of way (such as construction and haul roads, field offices, equipment and supply areas, plants, and material sources);
- removal of litter;
- repair to devices and features damaged by Contractor operations;
- added measures and maintenance needed due to negligence, carelessness, lack of maintenance, and failure to install permanent controls;
- removal and reinstallation of devices and features needed for the convenience of the Contractor;
- finish grading and dressing upon removal of the device; and
- minor adjustments including but not limited to plumbing posts, reattaching fabric, minor grading to maintain slopes on an erosion embankment feature, or moving small numbers of sandbags.

The Contractor will be reimbursed for maintenance, repair, or reinstallation of devices and features when the need for additional control measures cannot be attributed to the above, as determined by the Engineer. Stabilization of disturbed areas will be paid for under pertinent Items. Furnishing and installing pipe for outfalls associated with sediment traps and ponds will not be paid for directly but is subsidiary to the excavation and embankment under this Item.

Pollution control measures outside the right of way will not be measured for payment but shall be performed at the Contractor's expense.

Control measures as shown on the plans will be paid for in accordance with applicable bid items as shown below:

A. Rock Filter Dams. The work performed and materials furnished in accordance with this Item and measured as provided under "Measurement" will be paid for at the unit price bid as follows:

1. **Installation.** Installation will be paid for as "Rock Filter Dams (Install)" of the type specified. This price is full compensation for furnishing and operating equipment, finish backfill and grading, lacing, proper disposal, labor, materials, tools, and incidentals.

2. **Removal.** Removal will be paid for as "Rock Filter Dams (Remove)." This price is full compensation for furnishing and operating equipment, proper disposal, labor, materials, tools, and incidentals.

When the Engineer directs that the rock filter dam installation or portions thereof be replaced, payment will be made at the unit price bid for "Rock Filter Dams (Remove)" and for "Rock Filter Dams (Install)" of the type specified. This price is full compensation for furnishing and operating equipment, finish backfill and grading, lacing, proper disposal, labor, materials, tools, and incidentals

B. Temporary Pipe Slope Drains. The work performed and materials furnished in accordance with this Item and measured as provided under "Measurement" will be paid for at the unit price bid for "Temporary Pipe Slope Drains" of the size specified. This price is full

compensation for furnishing materials, removal and disposal, furnishing and operating equipment, labor, tools, and incidentals.

Removal of temporary pipe slope drains will not be paid for directly but is subsidiary to the installation Item. When the Engineer directs that the pipe slope drain installation or portions thereof be replaced, payment will be made at the unit price bid for "Temporary Pipe Slope Drains" of the size specified, which is full compensation for the removal and reinstallation of the pipe drain.

Earthwork required for the pipe slope drain installation, including construction of the sediment trap, will be measured and paid for under Section 540.5.F, "Earthwork for Erosion and Sediment Control." Riprap concrete or stone, when used as an energy dissipater or as a stabilized sediment trap, will be measured and paid for in accordance with Item 505, "Concrete Riprap" or TxDOT Item 432, "Riprap," respectively.

C. Baled Hay. The work performed and materials furnished in accordance with this Item and measured as provided under "Measurement" will be paid for at the unit price bid for "Baled Hay." This price is full compensation for furnishing and placing bales, excavating trenches, removal and disposal, equipment, labor, tools, and incidentals.

When the Engineer directs that the baled hay installation (or portions thereof) be replaced, payment will be made at the unit price bid for "Baled Hay," which is full compensation for removal and reinstallation of the baled hay.

D. Temporary Paved Flumes. The work performed and materials furnished in accordance with this Item and measured as provided under "Measurement" will be paid for at the unit price bid for "Temporary Paved Flume (Install)" or "Temporary Paved Flume (Remove)." This price is full compensation for furnishing and placing materials, removal and disposal, equipment, labor, tools, and incidentals.

When the Engineer directs that the paved flume installation or portions thereof be replaced, payment will be made at the unit prices bid for "Temporary Paved Flume (Remove)" and "Temporary Paved Flume (Install)." These prices are full compensation for the removal and replacement of the paved flume and for equipment, labor, tools, and incidentals.

Earthwork required for the paved flume installation, including construction of a sediment trap will be considered subsidiary to this item and will not be measured or paid for directly.

E. Construction Exits. Contractor-required construction exits from off right-of-way locations or on-right of way PSLs will not be paid for directly but are subsidiary to pertinent Items.

The work performed and materials furnished in accordance with this Item and measured as provided under "Measurement" for construction exits needed on right-of-way access to work areas required by the Department will be paid for at the unit price bid for "Construction Exits (Install)" of the type specified or "Construction Exits (Remove)." This price is full compensation for furnishing and placing materials, excavating, removal and disposal, cleaning vehicles, labor, tools, and incidentals.

When the Engineer directs that a construction exit or portion thereof be removed and replaced, payment will be made at the unit prices bid for "Construction Exit (Remove)" and "Construction Exit (Install)" of the type specified. These prices are full compensation for the

removal and replacement of the construction exit and for equipment, labor, tools, and incidentals.

Construction of sediment traps used in conjunction with the construction exit will be considered subsidiary to this item and will not be measured or paid for directly.

F. Earthwork for Erosion and Sediment Control. The work performed and materials furnished in accordance with this Item will not be paid for directly but is subsidiary to pertinent Items unless otherwise shown on the plans.

Sprinkling and rolling required by this Item will not be paid for directly, but will be subsidiary to this Item.

G. Construction Perimeter Fence. The work performed and materials furnished in accordance with this Item and measured as provided under "Measurement" will be paid for at the unit price bid for "Construction Perimeter Fence." This price is full compensation for furnishing and placing the fence; digging, fence posts, wire, and flagging; removal and disposal; and materials, equipment, labor, tools, and incidentals.

Removal of construction perimeter fence will be not be paid for directly but is subsidiary to the installation Item. When the Engineer directs that the perimeter fence installation or portions thereof be removed and replaced, payment will be made at the unit price bid for "Construction Perimeter Fence," which is full compensation for the removal and reinstallation of the construction perimeter fence.

H. Sandbags for Erosion Control. Sandbags will be paid for at the unit price bid for "Sandbags for Erosion Control" (of the height specified when measurement is by the foot). This price is full compensation for materials, placing sandbags, removal and disposal, equipment, labor, tools, and incidentals.

Removal of sandbags will not be paid for directly but is subsidiary to the installation Item. When the Engineer directs that the sandbag installation or portions thereof be replaced, payment will be made at the unit price bid for "Sandbags for Erosion Control," which is full compensation for the reinstallation of the sandbags.

I. Temporary Sediment-Control Fence. The work performed and materials furnished in accordance with this Item and measured as provided under "Measurement" will be paid for at the unit price bid for "Temporary Sediment-Control Fence." This price is full compensation for furnishing and placing the fence; trenching, fence posts, fabric and backfill; removal and disposal; and equipment, labor, tools, and incidentals.

Removal of temporary sediment-control fence will not be paid for directly but is subsidiary to the installation Item. When the Engineer directs that the temporary sedimentation control fence installation or portions thereof be replaced, payment will be made at the unit price bid for "Temporary Sediment-Control Fence," which is full compensation for the removal and reinstallation of the temporary sediment-control fence.

J. Curb Inlet Gravel Filter. The work performed and the materials furnished as specified herein, measured as provided under "Measurement" will be paid for at the unit price bid per linear foot for "Curb Inlet Gravel Filter," which payment shall be full compensation for furnishing all materials, labor, tools, equipment and incidentals necessary to complete the work as specified, including maintaining and replacing the gravel bags as required by these

specifications, removal of accumulated silt, and removal and proper disposal of the "Curb Inlet Gravel Filter" upon completion of site stabilization.

540.7. BID ITEM:

Item 540.1 - Rock Filter Dams (Install/Remove) - per linear foot (Type _)

Item 540.2 - Rock Filter Dams (Install/Remove) - per cubic yard (Type _)

Item 540.3 - Temporary Pipe Slope Drains - per foot (_ inches in diameter)

Item 540.4 - Baled Hay - per bale

Item 540.5 - Temporary Paved Flume (Install/Remove) - per square yard

Item 540.6 - Construction Exits (Install/Remove) - per square yard

Item 540.7 - Construction Perimeter Fence - per foot

Item 540.8 - Sandbags for Erosion Control - per foot (_ inches high)

Item 540.9 - Temporary Sediment-Control Fence - per foot

Item 540.10 - Curb Inlet Gravel Filters - per linear foot

ITEM

550 TRENCH EXCAVATION SAFETY PROTECTION

550.1. DESCRIPTION: *Provide trench excavation safety protection required for the construction of all trench excavation in the project and including all additional excavation and backfill necessitated by the protection system.*

550.2. CONSTRUCTION: Provide vertical or sloped cuts, benches, shields, support systems, or other systems providing the necessary protection in accordance with the most recent provisions of OSHA Standards and Interpretations, 29 CFR 1926, Subpart P, "Excavations."

Utilize Subpart P, Appendix F, "Selection of Protective Systems" to make decisions regarding whether trench excavation protective systems are to be used for certain trench depths and soil conditions.

550.3. MEASUREMENT: This Item will be measured by the linear foot along the long axis of a trench that requires safety excavation per OSHA and will be entered by personnel. This measurement includes all required trench protection, including trench ends.

550.4. PAYMENT: The work performed and materials furnished in accordance with this Item and measured as provided under "Measurement" will be paid for at the unit price bid for "Trench Excavation Safety Protection."

This price is full compensation for excavation and backfill required for excavation protection; for any retention by contractor of structural design/geotechnical/safety/ equipment consultant; furnishing, placing, and removing shoring, sheeting, or bracing; dewatering or diversion of water; jacking and jack removal; and equipment, labor, materials, tools, and incidentals.

550.5. BID ITEM:

Item 550.1 - Trench Excavation Safety Protection – per linear foot

ITEM

554 EROSION CONTROL MATTING

554.1. DESCRIPTION: *This item shall govern for the furnishing and placing of erosion control mat (ECM) of the size and quantity designated to prevent soil erosion in channels and on steep slopes as shown on the plans and in accordance with these specifications.*

NOTE: An erosion control mat (ECM) is defined as either a degradable erosion control blanket (ECB), a turf reinforcement mat (TRM), or a high performance turf reinforcement mat (HPTRM). ECB should be used in applications where degradable mats are acceptable and calculated shear stresses are less than or equal to 1½ lbs/ft^2. TRM or HPTRM should be used when calculated shear stresses are greater than 1½ lbs/ft^2.

A. ECB. An erosion control mat manufactured from biodegradable materials designed to hold seed and soil in place until vegetation is established in disturbed areas and promote vegetation.

B. TRM. An erosion control mat manufactured from 100% synthetic non degradable materials with a minimum 10 year design life. TRM's are designed to reinforce the root system of vegetation, and form a high-strength system that helps prevent soil erosion in high velocity channels and on steep slopes.

C. HPTRM. A high survivability turf reinforcement mat manufactured from 100% continuously woven synthetic material with a minimum 25 year design life. HPTRM's are designed to reinforce the root system of vegetation, and form a high-strength system for applications with high loading and/or high survivability requirements. These applications may include the need for maintenance vehicles within channels, high bed loading, protection of critical structures and/or utility cuts, and projects requiring higher factors of safety.

554.2. MATERIALS: The ECB, TRM or HPTRM supplied shall meet the requirements of Texas Department of Transportation (TxDOT) Standard Specifications For Construction Item 169, "Soil Retention Blankets," of the Class and Type as specified on the plans and are on the approved product lists for TxDOT. Further definition of the Erosion Control Matting, beyond "Class and Type" shall be at the discretion of the Engineer, and may include but not limited to the requirements for performance properties such as maximum shear stress, velocity, functional longevity, design life, UV resistance, tensile strength, and manufacturing process. Materials manufactured of biodegradable components shall be classified as ECB's. Materials manufactured from 100% synthetic components shall be classified as TRM's. Materials manufactured from 100% continuously woven synthetic components shall be classified as HPTRM's.

A. Material Submittals. The submittal requirements for this specification item shall include:

1. The erosion control matting type.

2. The certified Minimum Average Roll Values (MARV) for physical properties, as derived from quality control testing performed by a Geosynthetic Accreditation Institute - Laboratory Accreditation Program (GAI-LAP) accredited laboratory.

3. Documentation of certifiable, independent large-scale testing which support's Manufacturer's reported product performance properties.

4. One full set of the Manufacturer's literature and installation recommendations as well as any special details necessary for the proposed application.

5. A sample will be required.

B. **Material Acceptance.** The acceptance of the materials shall be at the discretion of the Engineer. Acceptance shall be based upon conformance with this specification and the additional material properties added by the Engineer and included in the Project Documents. Acceptance of materials must be received in writing from the Engineer prior to construction proceeding.

554.3. EQUIPMENT: Provide the machinery, tools and equipment necessary for proper prosecution of the work. All machinery, tools and equipment used shall be maintained in a satisfactory and workmanlike manner.

554.4. CONSTRUCTION:

A. **General.**

1. **Schedule.** Prior to start of construction, submit schedules to the Engineer for accomplishment of temporary and permanent erosion control work included in the construction drawings, as are applicable for clearing and grubbing, grading, and installation of erosion control mat. Also submit a proposed method of erosion and dust control on haul roads and a plan for disposal of waste materials.

2. **Conflict.** In the event of a conflict between these requirements and storm water pollution control laws, rules or regulations of other Federal, State, or Local agencies, the more restrictive laws, rules or regulations shall apply.

B. **Site Preparation.**

1. **ECB.** Prepare subgrade by removing large rocks, soil clods, vegetation, and other sharp objects (larger than 2" in diameter) that could keep the ECB from intimate contact with subgrade.

2. **TRM/HPTRM.**

a. Grade and compact areas to be treated with TRM/HPTRM and compact. The top 8" of subgrade must be free of rock, debris and consist of a cohesive live soil that meets the requirements of Item 515, "Topsoil.". The Engineer has final determination of whether or not the soil is "live." If the existing subgrade does not meet these standards, the contractor is responsible for the import of acceptable material.

b. Remove large rocks, soil clods, vegetation, and other sharp objects (larger than 2" in diameter) that could keep the TRM/HPTRM from intimate contact with subgrade.

c. Prepare the 8" compacted seedbed by loosening the top ½" of soil above final subgrade.

d. Construct, as a minimum, 12 in x 12 in anchor trenches at upstream and downstream ends of the installation to inhibit undermining from stray surface water. (Anchor trenches should be excavated to a depth that matches design scour depth.) Excavate 6 in x 6 in check slots at 25 to 30 feet intervals along length of channel. Cut

longitudinal anchor slots 6 in x 6 in at top of each side slope. The aforementioned dimensions are minimums and the dimensions detailed on the drawings will control.

C. Installation.

1. **ECB.** Install ECB such that they are shingled downstream. The end of each ECB shall overlap the next downstream ECB by a minimum of 12 inches. Leading edges shall be placed in a trench that is 4 inches wide to a minimum depth of 8 inches. The fabric shall line the trench and then filled with available substrate. Install 2 staples per square yard of ECB using 6 in (depth) x 1 in (width) metal sod staples.

2. **TRM/HPTRM.**

   a. A mandatory pre-construction conference with an Engineer representing the TRM/HPTRM manufacturer, contractor, and inspector must be completed. The conference is to be scheduled by the contractor with at least one week's notice to all parties involved. Representatives may be required to be on site for installation assistance. The Contractor is to schedule the Engineer representing the TRM/HPTRM to inspect the site preparation prior to installation and the completed installation and provide a certified letter stating the site meets the manufacture's recommendations. All permanent TRM/HPTRM's shall be installed so as to produce root reinforcement of the vegetation. Stem reinforcement of the vegetation will not be accepted.

   b. Install the TRM/HPTRM at elevation and alignment indicated.

   c. The TRM/HPTRM, is to be soiled filled with ½" of top soil, and vegetated by applying the right mixture of seed and soil amendments with a Flexible Growth Medium, protected by a light weight erosion control blanket, or by applying the right mixture of seed and soil amendments with a wood blend fiber mulch, protected by a light weight erosion control blanket, or by placing sod directly on top and secure sod with 8" staples.

   d. Beginning at downstream end in center of channel, place initial end of first roll of TRM/HPTRM in anchor trench and secure with ground anchor devices at 12 in intervals.

   e. Position adjacent rolls in anchor trench in same manner, overlapping proceeding roll minimum 3 in.

   f. Secure the TRM/HPTRM at 12 in intervals along the trench, backfill and compact with specified soil or as directed by the Engineer.

   g. Unroll center strip of TRM/HPTRM upstream over compacted trench. Stop at next check slot or terminal anchor trench. Unroll adjacent rolls of TRM/HPTRM upstream in similar fashion, maintaining 3 in overlap.

   h. Fold and secure the TRM/HPTRM snugly into transverse check slots. Lay material in bottom of slot, and then fold it back against itself as indicated. Anchor through both layers of TRM/HPTRM at 12 in intervals. Backfill with soil and compact. Continue unrolling the TRM/HPTRM widths upstream over compacted slot to next check slot or terminal anchor trench.

i. Secure TRM/HPTRM to channel bottom with ground anchoring devices at a frequency of 2 ½ anchors per square yard. Anchors should be a minimum of 8 gauge and 8" in length or so that they have sufficient ground penetration to resist pullout in a saturated condition. Increased anchoring frequency may be required if site conditions are such that the Engineer determines it necessary.

j. At the Engineers discretion a manufacturer's designated representative shall be on site for installation assistance.

k. Any installation of angular placement, overlapping around curves, or modified placement methods must be detailed on the construction drawings.

l. The Engineer must approve alternate installation methods prior to execution.

D. Irrigation, Mowing, and Project Acceptance. Prior to project acceptance by the Engineer, it shall be the responsibility of the contractor to establish a minimum of 70% of the area seeded shall be covered with the specified vegetation with no bare or dead spots greater than 10 square feet. The contractor shall be responsible to set up and maintain temporary irrigation, as required, to assist in establishment of vegetation. All areas that erode prior to project acceptance shall be repaired at the expense of the contractor including necessary reseeding, watering, and repair of the TRM/HPTRM. Vegetated areas shall not be mowed prior to establishment of 70% vegetative density and a minimum grass growth of 3 inches. Mower height shall not be set lower than 3 inches. Throughout the duration of the project, the contractor shall be responsible for mowing to facilitate growth and shall not let the vegetation in the seeded areas exceed 18 inches. In addition, the Contractor shall water all grassed areas as often as necessary to establish satisfactory growth and to maintain its growth throughout the duration of the project.

554.5. MEASUREMENT: Measurement of erosion control matting will be made by the square yard of surface area covered, complete in place, and ready for use as an erosion control surface treatment. (Erosion Control Matting necessary for anchorage trenches, overlaps and waste is subsidiary to the design surface area).

554.6. PAYMENT: Erosion control matting, measured as herein specified, will be paid for at the unit Price bid per square yard, which payment shall include furnishing all materials (including topsoil amendment, fertilizer, seed, and material for anchorage trenches, overlaps and waste), labor, and equipment necessary to provide a complete and finished installation as specified.

554.7. BID ITEM:

Item 554.1 - Erosion Control Matting - per square yard

ITEM 356

FABRIC UNDERSEAL

356.1. Description. Furnish and place fabric underseal in a longitudinal, full-road-width application or over pavement joints.

356.2. Materials.

A. Longitudinal, Full-Width Underseal.

1. **Fabric.** Provide fabric meeting DMS-6220, "Fabric for Underseals." Use roll widths shown on the plans or as approved.
2. **Asphalt.** Provide the grade of asphalt shown on the plans and in accordance with Item 300, "Asphalts, Oils, and Emulsions."
3. **Blotter.** Provide screenings, natural sand, or other materials as approved.

B. Pavement Joint Underseal. Provide material in accordance with DMS-6260, "Reinforced Fabric Joint Underseal." Use roll widths as shown on the plans or as approved.

356.3. Equipment. For longitudinal, full-width underseal, provide applicable equipment in accordance with Item 316, "Surface Treatments."

356.4. Construction. Apply fabric underseal when the air temperature is 60°F and above, or above 50°F and rising. In all cases, do not apply when surface temperature is below 50°F. Do not apply when, according to the Engineer, weather conditions are not suitable. Measure air temperature in the shade and away from artificial heat.

A. Longitudinal, Full-Width Underseal.

1. **Surface Preparation.** Prepare the surface by cleaning off dirt, dust, or other debris. Set string lines for alignment if required. Remove existing raised pavement markers in accordance with the plans. When shown on the plans, remove vegetation and blade pavement edges.
2. **Asphalt Binder Application.** Apply asphalt binder:
   - with an asphalt distributor unless otherwise approved,
   - at the rate shown on the plans or as directed,
   - within 15°F of the temperature selected by the Engineer,
   - approximately 6 in. outside the fabric width, and
   - with paper or other approved material at the beginning and end of each shot to construct a straight transverse joint and to prevent overlapping of the asphalt.

   Unless otherwise approved, match longitudinal joints with the lane lines. The Engineer may require a string line if necessary to keep joints straight with no overlapping. Do not contaminate asphalt binder.
3. **Fabric Placement.** Immediately after asphalt binder application, align the fabric and broom or roll it in place. If skewed alignment occurs, cut the fabric, overlap the cut fabric to create a transverse joint, and begin application again. Roll or broom fabric onto the asphalt binder in a manner that prevents air bubbles from forming under the fabric. If wind prevents proper adherence of the fabric to the asphalt binder, especially at the edges, provide an alternate means of securing the edges to the pavement. Cease underseal application if the Engineer determines that wind conditions prevent proper placement.

   a. **Transverse Joints.** Overlap transverse joints by a minimum of 6 in. If traffic is allowed directly on the underseal, make all transverse joints with the top layer in the direction of traffic. At transverse joints, secure ends of overlapping fabric layer by nailing or other approved means.

b. **Longitudinal Joints.** Overlap longitudinal joints by a minimum of 4 in. Apply additional asphalt binder to secure longitudinal fabric joints.

4. **Blotter.** Apply blotter as directed to the top of the underseal to absorb excess asphalt binder. Remove any excess blotter as directed.

B. Pavement Joint Underseal.

1. **Surface Preparation.** Remove dirt, dust, or other debris from all joints and from the area on both sides of the joint that will be in contact with the installed underseal. Other preparation for proper adherence may be required as shown on the plans.

2. **Fabric Placement.** For transverse pavement joints, do not allow joints or laps in the underseal material. Minimize underseal material joints in longitudinal pavement joints, and do not allow overlap. Remove any protective coatings from the self-adhering layer of the fabric underseal. Center the fabric width over the joint. Apply fabric to the joint with a minimum of 5 in. on each side or as specified on the plans. Roll fabric in place to ensure adherence of the self-adhering binder. Do not allow air bubbles under the fabric.

356.5. Measurement.

A. Longitudinal, Full-Width Underseal.

1. **Asphalt Binder.** Asphalt binder will be measured as follows.

   a. **Volume.** Volume measurements will be made at the point of application on the road as gallons used at the application temperature, as directed, in the accepted fabric underseal.

   b. **Weight.** Weight measurements will be by the ton in accordance with Item 520, "Weighing and Measuring Equipment." At the end of the project, deduct any remaining material from quantities delivered to determine pay quantities.

2. **Fabric.** Fabric will be measured by the square yard based on the widths shown on the plans and the lengths measured at placement with no allowance for overlapping at transverse and longitudinal joints.

B. Pavement Joint Underseal. Pavement joint underseal will be measured by the foot.

356.6. Payment. The work performed and materials furnished in accordance with this Item and measured as provided under "Measurement" are paid for at the unit prices bid for "Asphalt Binder" of the type and grade specified and for "Fabric" for full-width underseals and "Pavement Joint Underseal" of the product width specified for pavement joint underseals. These prices are full compensation for cleaning and preparing the existing pavement, including removal of raised pavement markers; furnishing, preparing, hauling, and placing materials, including blotter; manipulation, including rolling and brooming; and equipment, labor, tools, and incidentals.

ITEM 420
CONCRETE STRUCTURES

420.1. Description. Construct concrete structures.

420.2. Materials.

A. Concrete. Provide concrete conforming to Item 421, "Hydraulic Cement Concrete." For each type of structure or unit, provide the class of concrete shown on the plans or in pertinent governing specifications.

B. Grout or Mortar. Provide grout or mortar conforming to Section 421.2.F, "Mortar and Grout."

C. Latex. Provide an acrylic-polymer latex admixture (acrylic resin emulsion per DMS-4640, "Chemical Admixtures for Concrete") suitable for producing polymer-modified concrete or mortar. Do not allow latex to freeze.

D. Reinforcing Steel. Provide reinforcing steel conforming to Item 440, "Reinforcing Steel."

E. Expansion Joint Material. Provide materials that conform to the requirements of DMS-6310, "Joint Sealants and Fillers":

- Provide preformed fiber expansion joint material that conforms to the dimensions shown on the plans. Provide preformed bituminous fiber material unless otherwise specified.
- Provide a Class 4, 5, or 7 low-modulus silicone sealant unless otherwise directed.
- Provide asphalt board that conforms to dimensions shown on the plans.
- Provide re-bonded neoprene filler that conforms to the dimensions shown on the plans.

F. Waterstop. Provide rubber or polyvinyl chloride (PVC) waterstops that conform to DMS-6160, "Waterstops, Nylon Reinforced Neoprene Sheet, and Elastomeric Pads," unless otherwise shown on the plans.

G. Evaporation Retardants. Provide evaporation retardants that conform to the requirements of DMS-4650, "Hydraulic Cement Concrete Curing Materials and Evaporation Retardants."

H. Curing Materials. Provide membrane curing compounds that conform to the requirements of DMS-4650, "Hydraulic Cement Concrete Curing Materials and Evaporation Retardants."

Provide cotton mats that consist of a filling material of cotton "bat" or "bats" (at least 12 oz. per square yard) completely covered with unsized cloth (at least 6 oz. per square yard) stitched longitudinally with continuous parallel rows of stitching spaced at less than 4 in., or tuft both longitudinally and transversely at intervals less than 3 in. Provide cotton mats that are free from tears and in good general condition. Provide a flap at least 6 in. wide consisting of 2 thicknesses of the covering and extending along 1 side of the mat.

Provide polyethylene sheeting that is at least 4 mils thick and free from visible defects. Provide only clear or opaque white sheeting when the ambient temperature during curing exceeds 60°F or when applicable to control temperature during mass pours.

Provide burlap-polyethylene mats made from burlap impregnated on 1 side with a film of opaque white pigmented polyethylene, free from visible defects. Provide laminated mats that have at least 1 layer of an impervious material such as polyethylene, vinyl plastic, or other acceptable material (either as a solid sheet or impregnated into another fabric) and are free of visible defects.

I. Epoxy. Unless otherwise specified, provide epoxy materials that conform to DMS-6100, "Epoxy and Adhesives."

420.3. Equipment.

A. Fogging Equipment. Use fogging equipment that can apply water in a fine mist, not a spray. Produce the fog using equipment that pumps water or water and air under high pressure through a suitable atomizing nozzle. Use hand-held mechanical equipment portable enough to use in the direction of any prevailing wind and adaptable for intermittent use to prevent excessive wetting of the concrete.

B. Transporting and Placing Equipment. Use appropriate transporting and placing equipment such as buckets, chutes, buggies, belt conveyors, pumps, or other equipment as necessary. Do not transport or convey concrete through equipment made of aluminum. Use carts with pneumatic tires for carting or wheeling concrete over newly placed slabs.

Use tremies to control the fall of concrete or for underwater placement. Use tremies that are watertight and of large enough diameter to allow the placement of the concrete but less than 14 in. in diameter. For underwater placements, construct the tremie so that the bottom can be sealed and opened once the tremie has been fully charged with concrete.

Use pumps with lines at least 5 in. I.D. where Grade 2 or smaller coarse aggregate is used, and at least 8 in. I.D. for Grade 1 coarse aggregate.

C. Vibrators. Use immersion-type vibrators for consolidation of concrete. Provide at least 1 standby vibrator for emergency use.

D. Screeds and Work Bridges for Bridge Slabs. For bridge slabs use a self-propelled transverse screed or a mechanical longitudinal screed. Use transverse screeds that are able to follow the skew of the bridge for skews greater than 15° unless otherwise approved. Equip transverse screeds with a pan float. Manually operated screeding equipment may be used if approved for top slabs of culverts, small placements, or unusual conditions. Use screeds that are rigid and heavy enough to hold true to shape and have sufficient adjustments to provide for the required camber or section. Equip the screeds, except those of the roller drum type, with metal cutting edges.

For bridge slabs, use sufficient work bridges for finishing operations. Mount a carpet drag to a work bridge or a moveable support system that can vary the area of carpet in contact with the concrete. Use carpet pieces long enough to cover the entire width of the placement. Splice or overlap the carpet as necessary. Ensure that enough carpet is in contact longitudinally with the concrete being placed to provide the desired surface finish. Use artificial grass-type carpeting having a molded polyethylene pile face with a blade length between 5/8 and 1 in. and with a minimum weight of 70 oz. per square yard. Ensure that the carpet has a strong, durable backing not subject to rot and that the facing is adequately bonded to the backing to withstand the intended use. A burlap drag, attached to the pan float on a transverse screed, may be used instead of the carpet drag.

E. Temperature Recording Equipment. For mass concrete operations or as otherwise specified, use strip chart temperature recording devices, recording maturity meters in accordance with Tex-426-A, or other approved devices that are accurate to within ±2°F within the range of 32 to 212°F.

F. Artificial Heating Equipment. Use artificial heating equipment as necessary for maintaining the concrete temperatures as specified in Section 420.4.G.11, "Placing Concrete in Cold Weather."

G. Sawing Equipment. Use sawing equipment capable of cutting grooves in completed bridge slabs and top slabs of direct-traffic culverts. Provide grooves that are 1/8 to 3/16 in. deep and nominally 1/8 in. wide. Groove spacing may range from 5/8 to 1 in. Use sawing

equipment capable of cutting grooves in hardened concrete to within 18 in. of the barrier rail or curb.

H. Spraying Equipment. Use mechanically powered pressure sprayers, either air or airless, with appropriate atomizing nozzles for the application of membrane curing. Mechanically driven spraying equipment, adaptable to the rail system used by the screeds, may be used for applying membrane curing to bridge slabs. If approved, use hand-pressurized spray equipment equipped with 2 or 3 fan-spray nozzles. Ensure that the spray from each nozzle overlaps the spray from adjacent nozzles by approximately 50%.

I. Concrete Testing Equipment. Provide testing equipment for use by the Engineer in accordance with Section 421.3.C, "Testing Equipment."

420.4. Construction. Before starting work, obtain approval for proposed construction methods. Approval of construction methods and equipment does not relieve the Contractor's responsibility for safety or correctness of methods, adequacy of equipment, or completion of work in full accordance with the Contract.

Unless otherwise shown on the plans, it is the Contractor's option to perform testing on structural concrete (structural classes of concrete are identified in Table 5 of Section 421.4.A, "Classification and Mix Design") to determine the in-situ strength to address the schedule restrictions in Section 420.4.A, "Schedule Restrictions." The Engineer may require the Contractor to perform this testing for concrete placed in cold weather. For Contractor-performed testing, make enough test specimens to ensure that strength requirements are met for the operations listed in Section 420.4.A. Make at least 1 set of test specimens for each element cast each day. Cure these specimens under the same conditions as the portion of the structure involved for all stages of construction. Ensure safe handling, curing, and storage of all test specimens. Provide testing personnel, and sample and test the hardened concrete in accordance with Section 421.4.G, "Sampling and Testing of Concrete." The maturity method, Tex-426-A, may be used for in-situ strength determination for schedule restrictions if approved. Coring will not be allowed for in-situ strength determination for schedule restrictions. Provide the Engineer the opportunity to witness all testing operations. Report all test results to the Engineer.

If the Contractor does not wish to perform schedule restriction testing, the Engineer's 7-day lab-cured tests, performed in accordance with Section 421.4.G.5, "Adequacy and Acceptance of Concrete," will be used

for schedule restriction determinations. The Engineer may require additional time for strength gain to account for field curing conditions such as cold weather.

A. Schedule Restrictions. Unless otherwise shown on the plans, construct and open completed structures to traffic with the following limitations:

1. **Setting Forms.** Attain at least 2,500 psi compressive strength before erecting forms on concrete footings supported by piling or drilled shafts, or on individual drilled shafts. Erect forms on spread footings and culvert footings after the footing concrete has aged at least 2 curing days as defined in Section 420.4.J, "Curing Concrete." Place concrete only after the forms and reinforcing steel have been inspected by the Engineer.

   Support tie beam or cap forms by falsework on previously placed tie beams only if the tie beam concrete has attained a compressive strength of 2,500 psi and the member is properly supported to eliminate stresses not provided for in the design. Maintain curing as required until completion of the curing period.

   Place superstructure forms or falsework on the substructure only if the substructure concrete has attained a compressive strength of 3,000 psi.

2. **Removal of Forms and Falsework.** Keep in place weight-supporting forms and falsework for bridge components and culvert slabs until the concrete has attained a compressive strength of 2,500 psi in accordance with Section 420.4.K, "Removal of Forms and Falsework." Keep all forms for mass placements defined in Section 420.4.G.14, "Mass Placements," in place for 4 days following concrete placement.

3. **Placement of Superstructure Members.** Do not place superstructure members before the substructure concrete has attained a compressive strength of 3,000 psi.

4. **Longitudinal Screeding of Bridge Slabs.** Place a longitudinal screed directly on previously placed concrete slabs to check and grade an adjacent slab only after the previously placed slab has aged at least 24 hr. Place and screed the concrete after the previously placed slabs have aged at least 48 hr. Maintain curing of the previously placed slabs during placement.

5. **Staged Placement of Bridge Slabs on Continuous Steel Units.** When staged placement of a slab is required, ensure that the previously placed concrete attains a compressive strength of

3,000 psi before placing the next stage placement. Multiple stages may be placed in a single day if approved.

6. **Storage of Materials on the Structure.** Obtain approval to store materials on completed portions of a structure once a compressive strength of 3,000 psi has been attained. Maintain proper curing if materials will be stored on structures before completion of curing.
7. **Placement of Equipment and Machinery.** Do not place erection equipment or machinery on the structure until the concrete has attained the design strength specified in Section 421.4.A, "Classification and Mix Design," unless otherwise approved.
8. **Carting of Concrete.** Once the concrete has attained a compressive strength of 3,000 psi, it may be carted, wheeled, or pumped over completed slabs. Maintain curing during these operations.
9. **Placing Bridge Rails.** Reinforcing steel and concrete for bridge rails may be placed on bridge slabs once the slab concrete has attained a compressive strength of 3,000 psi. If slipforming methods are used for railing concrete, ensure the slab concrete has attained its design strength specified in Section 421.4.A, "Classification and Mix Design," before placing railing concrete.
10. **Opening to Construction Traffic.** Bridges and direct-traffic culverts may be opened to all construction traffic when the design strength specified in Section 421.4.A, "Classification and Mix Design," has been attained if curing is maintained.
11. **Opening to Full Traffic.** Bridges and direct-traffic culverts may be opened to the traveling public when the design strength specified in Section 421.4.A, "Classification and Mix Design," has been attained for all structural elements including railing subject to impact from traffic, when curing has been completed for all slabs, and when the concrete surface treatment has been applied in accordance with Item 428, "Concrete Surface Treatment." Obtain approval before opening bridges and direct-traffic culverts to the traveling public. Other noncritical structural and nonstructural concrete may be opened for service upon the completion of curing unless otherwise specified or directed.
12. **Post-Tensioned Construction.** For structural elements designed to be post-tensioned ensure that strength requirements on the plans are met for stressing and staged loading of structural elements.

13. **Backfilling.** Backfill in accordance with Section 400.3.C, "Backfill."

B. **Plans for Falsework and Forms.** Submit 2 copies of plans for falsework and forms for piers, superstructure spans over 20 ft. long, bracing systems for girders when the overhang exceeds 3 ft. 6 in., and bridge widening details. Submit similar plans for other units of the structure as directed. Show all essential details of proposed forms, falsework, and bracing. Have a licensed professional engineer design, seal, and sign these plans. Department approval is not required, but the Department reserves the right to request modifications to the plans. The Contractor is responsible for the adequacy of these plans.

C. **Falsework.** Design and construct falsework to carry the maximum anticipated loads safely, including wind loads, and to provide the necessary rigidity. Submit details in accordance with Section 420.4.B, "Plans for Falsework and Forms."

Design job-fabricated falsework assuming a weight of 150 pcf for concrete, and include a liveload allowance of 50 psf of horizontal surface of the form. Do not exceed 125% of the allowable stresses used by the Department for the design of structures.

For commercially produced structural units used in falsework, do not exceed the manufacturer's maximum allowable working loads for moment and shear or end reaction. Include a liveload allowance of 35 psf of horizontal form surface in determining the maximum allowable working load for commercially produced structural units.

Provide timber that is sound, in good condition, and free from defects that would impair its strength. Provide timber that meets or exceeds the species, size, and grade requirements in the submitted falsework plans.

Provide wedges made of hardwood or metal in pairs to adjust falsework to desired elevations to ensure even bearing. Do not use wedges to compensate for incorrectly cut bearing surfaces.

Use sills or grillages that are large enough to support the superimposed load without settlement. Take precautions to prevent settling of the supporting material unless the sills or grillages are founded on solid rock, shale, or other hard materials.

Place falsework that cannot be founded on a satisfactory spread footing on piling or drilled shafts with enough bearing capacity to support the superimposed load without settlement. Drive falsework piling to the required resistance determined by the applicable formula in Item 404,

"Driving Piling." Design drilled shafts for falsework to carry the superimposed load using both skin friction and point bearing.

Weld in conformance with Item 448, "Structural Field Welding." Securely brace each falsework bent to provide the stiffness required, and securely fasten the bracing to each pile or column it crosses.

Remove falsework when it is no longer required or as indicated on the submitted falsework plan. Pull or cut off foundations for falsework at least 2 ft. below finished ground level. Completely remove falsework, piling, or drilled shafts in a stream, lake, or bay to the approved limits to prevent obstruction to the waterway.

D. Forms. Submit formwork plans in accordance with Section 420.4.B, "Plans for Falsework and Forms."

1. General. Except where otherwise specified or permitted, provide forms of either timber or metal.

Design forms for the pressure exerted by a liquid weighing 150 pcf. Take the rate of concrete placement into consideration in determining the depth of the equivalent liquid. Include a liveload allowance of 50 psf of horizontal surface for job-fabricated forms. Do not exceed 125% of the allowable stresses used by the Department for the design of structures.

For commercially produced structural units used for forms, do not exceed the manufacturer's maximum allowable working loads for moment and shear or end reaction. Include a liveload allowance of 35 psf of horizontal form surface in determining the maximum allowable working load for commercially produced structural units.

Provide steel forms for round columns unless otherwise approved. Refer to Item 427, "Surface Finishes for Concrete," for additional requirements for off-the-form finishes.

Provide commercial form liners for imprinting a pattern or texture on the concrete surface as shown on the plans and specified in Section 427.4.B.2.d, "Form Liner Finish."

Provide forming systems that are practically mortar-tight, rigidly braced, and strong enough to prevent bulging between supports, and maintain them to the proper line and grade during concrete placement. Maintain forms in a manner that prevents warping and shrinkage. Do not allow offsets at form joints to exceed 1/16 in.

For forms to be left in place, use only material that is inert, nonbiodegradable, and nonabsorptive.

Attachment of forms or screed supports for bridge slabs to steel I-beams or girders may be by welding subject to the following requirements:

- Do not weld to tension flanges or to areas indicated on the plans.
- Weld in accordance with Item 448, "Structural Field Welding."

Take into account:

- deflections due to cast-in-place slab concrete and railing shown in the dead load deflection diagram in the setting of slab forms,
- differential beam or girder deflections due to skew angles and the use of certain stay-in-place slab forming systems, and
- deflection of the forming system due to the wet concrete.

For bridge approach slabs, securely stake forms to line and grade and maintain in position. Rigidly attach inside forms for curbs to the outside forms.

Construct all forms to permit their removal without marring or damaging the concrete. Clean all forms and footing areas of any extraneous matter before placing concrete. Provide openings in forms if needed for the removal of laitance or foreign matter

Treat the facing of all forms with bond-breaking coating of composition that will not discolor or injuriously affect the concrete surface. Take care to prevent coating of the reinforcing steel.

Complete all preparatory work before requesting permission to place concrete.

If the forms show signs of bulging or sagging at any stage of the placement, cease placement and remove the portion of the concrete causing this condition immediately if necessary. Reset the forms and securely brace them against further movement before continuing the placement.

2. **Timber Forms.** Provide properly seasoned good-quality lumber that is free from imperfections that would affect its strength or impair the finished surface of the concrete. Provide timber or lumber that meets or exceeds the requirements for species and grade in the submitted formwork plans.

Maintain forms or form lumber that will be reused so that it stays clean and in good condition. Do not use any lumber that is split, warped, bulged, or marred or that has defects that will produce inferior work, and promptly remove such lumber from the work.

Provide form lining for all formed surfaces except:

- the inside of culvert barrels, inlets, manholes, and box girders;
- the bottom of bridge slabs between beams or girders;
- surfaces that are subsequently covered by backfill material or are completely enclosed; and
- any surface formed by a single finished board or by plywood.

Provide form lining of an approved type such as masonite or plywood. Do not provide thin membrane sheeting such as polyethylene sheets for form lining.

Use plywood at least 3/4 in. thick. Place the grain of the face plies on plywood forms parallel to the span between the supporting studs or joists unless otherwise indicated on the submitted form drawings.

Use plywood for forming surfaces that remain exposed that meets the requirements for B-B Plyform Class I or Class II Exterior of the U.S. Department of Commerce Voluntary Product Standard PS 1.

Space studs and joists so that the facing form material remains in true alignment under the imposed loads.

Space wales closely enough to hold forms securely to the designated lines, scabbed at least 4 ft. on each side of joints to provide continuity. Place a row of wales near the bottom of each placement.

Place facing material with parallel and square joints, securely fastened to supporting studs.

For surfaces exposed to view and receiving only an ordinary surface finish as defined in Section 420.4.M, “Ordinary Surface Finish,” place forms with the form panels symmetrical (long dimensions set in the same direction). Make horizontal joints continuous.

Make molding for chamfer strips or other uses of materials of a grade that will not split when nailed and that can be maintained to a true line without warping. Dress wood molding on all faces. Unless otherwise shown on the plans, fill forms at all sharp corners

and edges with triangular chamfer strips measuring 3/4 in. on the sides.

To hold forms in place, use metal form ties of an approved type or a satisfactory substitute of a type that permits ease of removal of the metal. Cut back wire ties at least 1/2 in. from the face of the concrete.

Use devices to hold metal ties in place that are able to develop the strength of the tie and adjust to allow for proper alignment.

Entirely remove metal and wooden spreaders that separate the forms as the concrete is being placed.

Provide adequate clean-out openings for narrow walls and other locations where access to the bottom of the forms is not readily attainable.

3. **Metal Forms.** Requirements for timber forms regarding design, mortar-tightness, filleted corners, beveled projections, bracing, alignment, removal, reuse, and wetting also apply to metal forms except that metal forms do not require lining unless specifically noted on the plans.

   Use form metal thick enough to maintain the true shape without warping or bulging. Countersink all bolt and rivet heads on the facing sides. Design clamps, pins, or other connecting devices to hold the forms rigidly together and to allow removal without damage to the concrete. Use metal forms that present a smooth surface and that line up properly. Keep metal free from rust, grease, and other foreign materials.

4. **Form Supports for Overhang Slabs.** Form supports that transmit a horizontal force to a steel girder or beam or to a prestressed concrete beam are permitted provided a satisfactory structural analysis has been made of the effect on the girder or beam as indicated in the submitted formwork plans.

   When overhang brackets are used on prestressed concrete beam spans with slab overhangs not exceeding 3 ft 6 in., use beam bracing as indicated in the plans. For spans with overhangs exceeding this amount, use additional support for the outside beams regardless of the type of beam used. Submit details of the proposed bracing system in accordance with Section 420.4.B, "Plans for Falsework and Forms."

   Punch or drill holes full size in the webs of steel members for support of overhang brackets, or torch-cut them to 1/4 in. under

size and ream them full size. Do not burn the holes full size. Leave the holes open unless otherwise shown on the plans. Never fill the holes by welding.

E. Drains. Install and construct weep holes and roadway drains as shown on the plans.

F. Placing Reinforcement. Place reinforcement as provided in Item 440, "Reinforcing Steel." Do not weld reinforcing steel supports to I-beams or girders or to reinforcing steel except where shown on the plans.

Place post-tensioning ducts in accordance with the approved prestressing details and in accordance with Item 426, "Prestressing." Keep ducts free of obstructions until all post-tensioning operations are complete.

G. Placing Concrete. Give the Engineer sufficient advance notice before placing concrete in any unit of the structure to permit the inspection of forms, reinforcing steel placement, and other preparations.

Follow the sequence of placing concrete shown on the plans or specified.

Do not place concrete when impending weather conditions would impair the quality of the finished work. If conditions of wind, humidity, and temperature are such that concrete cannot be placed without the potential for shrinkage cracking, place concrete in early morning or at night or adjust the placement schedule for more favorable weather. Consult the evaporation rate nomograph in the Portland Cement Association's *Design and Control of Concrete Mixtures* for shrinkage cracking potential. When mixing, placing, and finishing concrete in non-daylight hours, adequately illuminate the entire placement site as approved.

If changes in weather conditions require protective measures after work starts, furnish adequate shelter to protect the concrete against damage from rainfall or from freezing temperatures as outlined in this Item. Continue operations during rainfall only if approved. Use protective coverings for the material stockpiles. Cover aggregate stockpiles only to the extent necessary to control the moisture conditions in the aggregates.

Allow at least 1 curing day after the concrete has achieved initial set before placing strain on projecting reinforcement to prevent damage to the concrete.

1. **Placing Temperature.** Place concrete according to the following temperature limits for the classes of concrete defined in Section 421.4.A, "Classification and Mix Design":
   - Place Class C, F, H, K, or SS concrete only when its temperature at time of placement is between 50 and 95°F. Increase the minimum placement temperature to 60°F if ground-granulated blast furnace (GGBF) slag is used in the concrete.
   - When used in a bridge slab or in the top slab of a direct-traffic culvert, place Class CO, DC, or S concrete only when its temperature at the time of placement is between 50 and 85°F. Increase the minimum placement temperature to 60°F if GGBF slag is used in the concrete. The maximum temperature increases to 95°F if these classes are used for other applications.
   - Place Class A, B, and D concrete only when its temperature at the time of placement is greater than 50°F.
   - Place mass concrete, defined by Section 420.4.G.14, "Mass Placements," only when its temperature at the time of placement is between 50 and 75°F.
2. **Transporting Time.** Place concrete delivered in agitating trucks within 60 min. after batching. Place concrete delivered in non-agitating equipment within 45 min. after batching. Revise the concrete mix design as necessary for hot weather or other conditions that contribute to quick setting of the concrete. Submit for approval a plan to demonstrate that these time limitations can be extended while ensuring the concrete can be properly placed, consolidated, and finished without the use of additional water.
3. **Workability of Concrete.** Place concrete with a slump as specified in Section 421.4.A.5, "Slump." Concrete that exceeds the maximum slump will be rejected. Water may be added to the concrete before discharging any concrete from the truck to adjust for low slump provided that the maximum mix design water–cement ratio is not exceeded. After introduction of any additional water or chemical admixtures, mix concrete in accordance with Section 421.4.E, "Mixing and Delivering Concrete." Do not add water or chemical admixtures after any concrete has been discharged.
4. **Transporting Concrete.** Use a method and equipment capable of maintaining the rate of placement shown on the plans or required by this Item to transport concrete to the forms. Transport concrete

by buckets, chutes, buggies, belt conveyors, pumps, or other methods.

Protect concrete transported by conveyors from sun and wind to prevent loss of slump and workability. Shade or wrap with wet burlap pipes through which concrete is pumped as necessary to prevent loss of slump and workability.

Arrange and use chutes, troughs, conveyors, or pipes so that the concrete ingredients will not be separated. When necessary to prevent segregation, terminate such equipment in vertical downspouts. Extend open troughs and chutes, if necessary, down inside the forms or through holes left in the forms.

Keep all transporting equipment clean and free from hardened concrete coatings. Discharge water used for cleaning clear of the concrete.

5. **Preparation of Surfaces.** Thoroughly wet all forms, prestressed concrete panels, T-beams, and concrete box beams on which concrete is to be placed before placing concrete on them. Remove any remaining puddles of excess water before placing concrete. Provide surfaces that are in a moist, saturated surface-dry condition when concrete is placed on them.

   Ensure that the subgrade or foundation is moist before placing concrete for bridge approach slabs or other concrete placed on grade. Lightly sprinkle the subgrade if dry.

6. **Expansion Joints.** Construct joints and devices to provide for expansion and contraction in accordance with plan details and the requirements of this Section and Item 454, "Bridge Expansion Joints."

   Prevent bridging of concrete or mortar around expansion joint material in bearings and expansion joints.

   Use forms adaptable to loosening or early removal in construction of all open joints and joints to be filled with expansion joint material. To avoid expansion or contraction damage to the adjacent concrete, loosen these forms as soon as possible after final concrete set to permit free movement of the span without requiring full form removal.

   When the plans show a Type A joint, provide preformed fiber joint material in the vertical joints of the roadway slab, curb, median, or sidewalk, and fill the top 1 in. with the specified joint sealing material unless noted otherwise. Install the sealer in accordance

with Item 438, "Cleaning and Sealing Joints and Cracks (Rigid Pavement and Bridge Decks)," and the manufacturer's recommendations.

Use light wire or nails to anchor any preformed fiber joint material to the concrete on 1 side of the joint.

Ensure that finished joints conform to the plan details with the concrete sections completely separated by the specified opening or joint material.

Remove all concrete within the joint opening soon after form removal and again where necessary after surface finishing to ensure full effectiveness of the expansion joint.

7. **Construction Joints.** A construction joint is the joint formed by placing plastic concrete in direct contact with concrete that has attained its initial set. Monolithic placement means that the manner and sequence of concrete placing does not create a construction joint.

   Make construction joints of the type and at the locations shown on the plans. Do not make joints in bridge slabs not shown on the plans unless approved. Additional joints in other members are not permitted without approval. Place authorized additional joints using details equivalent to those shown on the plans for joints in similar locations.

   Unless otherwise required, make construction joints square and normal to the forms. Use bulkheads in the forms for all vertical joints.

   Thoroughly roughen the top surface of a concrete placement terminating at a horizontal construction joint as soon as practical after initial set is attained.

   Thoroughly clean the hardened concrete surface of all loose material, laitance, dirt, and foreign matter, and saturate it with water. Remove all free water and moisten the surface before concrete or bonding grout is placed against it.

   Draw forms tight against the existing concrete to avoid mortar loss and offsets at joints.

   Coat the joint surface with bonding mortar, grout, epoxy, or other material as indicated in the plans or other Items. Provide Type V epoxy per DMS-6100, "Epoxies and Adhesives," for bonding fresh concrete to hardened concrete. Place the bonding epoxy on a clean,

dry surface, and place the fresh concrete while the epoxy is still tacky. Place bonding mortar or grout on a surface that is saturated surface-dry, and place the concrete before the bonding mortar or grout dries. Place other bonding agents in accordance with the manufacturer's recommendations.

8. **Handling and Placing.** Minimize segregation of the concrete and displacement of the reinforcement when handling and placing concrete. Produce a uniform dense compact mass.

   Do not allow concrete to free-fall more than 5 ft. except in the case of drilled shafts, thin walls such as in culverts, or as allowed by other Items. Remove any hardened concrete splatter ahead of the plastic concrete.

   Fill each part of the forms by depositing concrete as near its final position as possible. Do not deposit large quantities at 1 point and run or work the concrete along the forms.

   Deposit concrete in the forms in layers of suitable depth but not more than 36 in. deep unless otherwise permitted.

   Avoid cold joints in a monolithic placement. Sequence successive layers or adjacent portions of concrete so that they can be vibrated into a homogeneous mass with the previously placed concrete before it sets. When re-vibration of the concrete is shown on the plans, allow at most 1 hr. to elapse between adjacent or successive placements of concrete except as otherwise allowed by an approved placing procedure. This time limit may be extended by 1/2 hr. if the concrete contains at least a normal dosage of retarding admixture.

   Use an approved retarding agent to control stress cracks and cold joints in placements where differential settlement and setting time may induce cracking.

9. **Consolidation.** Carefully consolidate concrete and flush mortar to the form surfaces with immersion type vibrators. Do not use vibrators that operate by attachment to forms or reinforcement except where approved on steel forms.

   Vibrate the concrete immediately after deposit. Systematically space points of vibration to ensure complete consolidation and thorough working of the concrete around the reinforcement, embedded fixtures, and into the corners and angles of the forms. Insert the vibrator vertically where possible except for slabs where it may be inserted in a sloping or horizontal position. Vibrate the

entire depth of each lift, allowing the vibrator to penetrate several inches into the preceding lift. Do not use the vibrator to move the concrete to other locations in the forms. Do not drag the vibrator through the concrete. Thoroughly consolidate concrete along construction joints by operating the vibrator along and close to but not against the joint surface. Continue the vibration until the concrete surrounding reinforcements and fixtures is completely consolidated. Hand-spade or rod the concrete if necessary to ensure flushing of mortar to the surface of all forms.

10. **Installation of Dowels and Anchor Bolts.** Install dowels and anchor bolts by casting them in-place or by grouting with grout, epoxy, or epoxy mortar unless noted otherwise. Form or drill holes for grouting.

    Drill holes for anchor bolts to accommodate the bolt embedment required by the plans. Make holes for dowels at least 12 in. deep unless otherwise shown on the plans. When using grout or epoxy mortar, make the diameter of the hole at least twice the dowel or bolt diameter, but the hole need not exceed the dowel or bolt diameter plus 1-1/2 in. When using epoxy, make the hole diameter 1/16 to 1/4 in. greater than the dowel or bolt diameter.

    Thoroughly clean holes of all loose material, oil, grease, or other bond-breaking substance, and blow them clean with filtered compressed air. Ensure that holes are in a surface dry condition when epoxy type material is used and in a surface moist condition when hydraulic cement grout is used. Develop and demonstrate for approval a procedure for cleaning and preparing the holes for installation of the dowels and anchor bolts. Completely fill the void between the hole and dowel or bolt with grouting material. Follow exactly the requirements for cleaning outlined in the product specifications for prepackaged systems.

    For cast-in-place or grouted systems, provide hydraulic cement grout in accordance with Section 421.2.F, “Mortar and Grout,” epoxy, epoxy mortar, or other prepackaged grouts as approved. Provide a Type III epoxy per DMS-6100, “Epoxies and Adhesives,” when neat epoxy is used for anchor bolts or dowels. Provide Type VIII epoxy per DMS-6100 when an epoxy grout is used. Provide grout, epoxy, or epoxy mortar as the binding agent unless otherwise indicated on the plans.

    Provide other anchor systems as required in the plans.

11. **Placing Concrete in Cold Weather.** Protect concrete placed under weather conditions where weather may adversely affect results. Permission given by the Engineer for placing during cold weather does not relieve the Contractor of responsibility for producing concrete equal in quality to that placed under normal conditions. If concrete placed under poor conditions is unsatisfactory, remove and replace it as directed at Contractor's expense.

    Do not place concrete in contact with any material coated with frost or having a temperature of 32°F or lower. Do not place concrete when the ambient temperature in the shade is below 40°F and falling unless approved. Concrete may be placed when the ambient temperature in the shade is 35°F and rising or above 40°F.

    Provide and install recording thermometers, maturity meters, or other suitable temperature measuring devices to verify that all concrete is effectively protected as follows:

    - Maintain the temperature of the top surface of bridge slabs and top slabs of direct-traffic culverts at 50°F or above for 72 hr. from the time of placement and above 40°F for an additional 72 hr.
    - Maintain the temperature at all surfaces of concrete in bents, piers, culvert walls, retaining walls, parapets, wingwalls, bottoms of bridge slab or culvert top slabs, and other similar formed concrete at 40°F or above for 72 hr. from the time of placement.
    - Maintain the temperature of all other concrete, including the bottom slabs (footings) of culverts, placed on or in the ground above 32°F for 72 hr. from the time of placement.

    Use additional covering, insulated forms, or other means and, if necessary, supplement the covering with artificial heating. Avoid applying heat directly to concrete surfaces. Cure as specified in Section 420.4.J, "Curing Concrete," during this period until all requirements for curing have been satisfied.

    When impending weather conditions indicate the possible need for temperature protection, have on hand all necessary heating and covering material, ready for use, before permission is granted to begin placement.

12. **Placing Concrete in Hot Weather.** Use an approved retarding agent in all concrete for superstructures and top slabs of direct-

traffic culverts, except concrete containing GGBF slag, when the temperature of the air is above 85°F unless otherwise directed.

Keep the concrete at or below the maximum temperature at time of placement as specified in Section 420.4.G.1, "Placing Temperature." Sprinkle and shade aggregate stockpiles or use ice, liquid nitrogen systems, or other approved methods as necessary to control the concrete temperature.

13. **Placing Concrete in Water.** Deposit concrete in water only when shown on the plans or with approval. Make forms or cofferdams tight enough to prevent any water current passing through the space in which the concrete is being deposited. Do not pump water during the concrete placing or until the concrete has set for at least 36 hr.

    Place the concrete with a tremie or pump, or use another approved method, and do not allow it to fall freely through the water or disturb it after it is placed. Keep the concrete surface approximately level during placement.

    Support the tremie or operate the pump so that it can be easily moved horizontally to cover all the work area and vertically to control the concrete flow. Submerge the lower end of the tremie or pump hose in the concrete at all times. Use continuous placing operations until the work is complete.

    For concrete to be placed under water, design the concrete mix in accordance with Item 421, "Hydraulic Cement Concrete," with a minimum cement content of 650 lb. per cubic yard. Include an anti-washout admixture in the mix design as necessary to produce a satisfactory finished product.

14. **Mass Placements.** Mass placements are defined as placements with a least dimension greater than or equal to 5 ft., or designated on the plans. For monolithic mass placements, develop and obtain approval for a plan to ensure the following during the heat dissipation period:
    - the temperature differential between the central core of the placement and the exposed concrete surface does not exceed 35°F and
    - the temperature at the central core of the placement does not exceed 160°F.

    Base this plan on the equations given in the Portland Cement Association's *Design and Control of Concrete Mixtures*. Cease all

mass placement operations and revise the plan as necessary if either of the above limitations is exceeded.

Include a combination of the following elements in this plan:

- selection of concrete ingredients including aggregates, gradation, and cement types, to minimize heat of hydration;
- use of ice or other concrete cooling ingredients;
- use of liquid nitrogen dosing systems;
- controlling rate or time of concrete placement;
- use of insulation or supplemental external heat to control heat loss;
- use of supplementary cementing materials; or
- use of a cooling system to control the core temperature.

Furnish and install 2 sets of temperature recording devices, maturity meters, or other approved equivalent devices at designated locations. Use these devices to simultaneously measure the temperature of the concrete at the core and the surface. Maintain temperature control methods for 4 days unless otherwise approved. Maturity meters may not be used to predict strength of mass concrete.

15. **Placing Concrete in Foundation and Substructure.** Do not place concrete in footings until the depth and character of the foundation has been inspected and permission has been given to proceed.

    Placing of concrete footings upon seal concrete is permitted after the cofferdams are free from water and the seal concrete cleaned. Perform any necessary pumping or bailing during the concreting from a suitable sump located outside the forms.

    Construct or adjust all temporary wales or braces inside cofferdams as the work proceeds to prevent unauthorized construction joints.

    When footings can be placed in a dry excavation without the use of cofferdams, omit forms if approved, and fill the entire excavation with concrete to the elevation of the top of footing.

    Place concrete in columns monolithically between construction joints unless otherwise directed. Columns and caps or tie beams supported on them may be placed in the same operation or separately. If placed in the same operation, allow for settlement and shrinkage of the column concrete by placing it to the lower level of the cap or tie beam, and delay placement between 1 and 2 hr. before proceeding with the cap or tie beam placement.

16. **Placing Concrete in Box Culverts.** Where the top slab and walls are placed monolithically in culverts more than 4 ft. in clear height, allow between 1 and 2 hr. to elapse before placing the top slab to allow for settlement and shrinkage in the wall concrete.

    Accurately finish the footing slab at the proper time to provide a smooth uniform surface. Finish top slabs that carry direct-traffic as specified in this Item. Give top slabs of fill type culverts a float finish.

17. **Placing Concrete in Superstructure.** Unless otherwise shown on the plans, place simple span bridge slabs without transverse construction joints by using either a self-propelled transverse finishing machine or a mechanical longitudinal screed. For small placements or for unusual conditions such as narrow widening, variable cross-slopes, or transitions, use of manually operated screeding equipment may be permitted. Support the screed adequately on a header or rail system stable enough to withstand the longitudinal or lateral thrust of the equipment. Adjust the profile grade line as necessary to account for variations in beam camber and other factors to obtain the required slab thickness and concrete cover over the slab reinforcement. Set beams and verify their surface elevations in a sufficient number of spans so that when adjustment is necessary, the profile grade line can be adjusted over suitable increments to produce a smooth riding surface. Take dead load deflection into account in setting the grades of headers and rail systems. Use construction joints, when required or permitted for slab placements on steel or prestressed concrete beams, as shown on the plans. Before placing concrete on steel girder or truss spans, release falsework under the spans and swing the spans free on their permanent supports.

    Make 1 or more passes with the screed over the bridge slab segment before placing concrete on it to ensure proper operation and maintenance of grades and clearances. Use an approved system of checking to detect any vertical movement of the forms or falsework. Maintain forms for the bottom surface of concrete slabs, girders, and overhangs to the required vertical alignment during concrete placing.

    Fog unformed surfaces of slab concrete in bridge slabs and in top slabs of direct-traffic culverts from the time of initial strikeoff of the concrete until finishing is completed and required interim curing is in place. Do not use fogging as a means to add finishing

water, and do not work moisture from the fog spray into the fresh concrete.

For simple spans, retard the concrete only if necessary to complete finishing operations or as required by this Section. When filling curb forms, bring the top of curb and sidewalk section to the correct camber and alignment, and finish them as described in this Item.

a. Transverse Screeding. Install rails for transverse finishing machines that are supported from the beams or girders so that the supports may be removed without damage to the slab. Prevent bonding between removable supports and the concrete in an acceptable manner. Do not allow rail support parts that remain embedded in the slab to project above the upper mat of reinforcing steel. Rail or screed supports attached to I-beams or girders are subject to the requirements of this Item. Unless otherwise shown on the plans, for transverse screeding the minimum rate of concrete placement is 30 linear feet of bridge slab per hour. Deposit concrete parallel to the skew of the bridge so that all girders are loaded uniformly along their length. Deposit slab concrete between the exterior beam and the adjacent beam before placing concrete in the overhang portion of the slab. Furnish personnel and equipment capable of placing, finishing, and curing the slab at an acceptable rate to ensure compliance with the specifications. Place concrete in transverse strips. On profile grades greater than 1-1/2%, start placement at the lowest end.

b. Longitudinal Screeding. Unless otherwise shown on the plans, use of temporary intermediate headers will be permitted for placements over 50 ft. long if the rate of placement is rapid enough to prevent a cold joint and if these headers are designed for easy removal to permit satisfactory consolidation and finish of the concrete at their locations. Deposit slab concrete between the exterior beam and the adjacent beam before placing concrete in the overhang portion of the slab. Place concrete in longitudinal strips starting at a point in the center of the segment adjacent to 1 side except as this Section indicates, and complete the strip by placing uniformly in both directions toward the ends. For spans on a profile grade of 1-1/2% or more, start placing at the lowest end. Use strips wide enough that the concrete within each strip remains plastic until placement of the adjacent strip. Where monolithic curb

construction is specified, place the concrete in proper sequence to be monolithic with the adjacent longitudinal strips of the slabs.

c. **Placements on Continuous Steel Units.** Unless otherwise shown on the plans, place slabs on continuous steel units in a single continuous operation without transverse construction joints using a self-propelled transverse finishing machine or a mechanical longitudinal screed. Retard the initial set of the concrete sufficiently to ensure that concrete remains plastic in at least 3 spans immediately preceding the slab being placed. Use construction joints, when required for slab placements on steel beams or girders, as shown on the plans. When staged placement of a slab is required in the plans, ensure that the previously placed concrete attains a compressive strength of 3,000 psi before placing the next stage concrete. Multiple stages may be placed in a single day if approved. Where plans permit staged placing without specifying a particular order of placement, use an approved placing sequence that will not overstress of any of the supporting members.

d. **Slab and Girder Units.** Unless otherwise shown on the plans, place girders, slab, and curbs of slab and girder spans monolithically. Fill concrete girder stems first, and place the slab concrete within the time limits specified in this Item. If using a transverse screed, place concrete in the stems for a short distance and then place the concrete in transverse strips. If using a longitudinal screed, fill the outside girder stem first, beginning at the low end or side, and continue placement in longitudinal strips.

H. **Treatment and Finishing of Horizontal Surfaces Other Than Bridge Slabs.** Strike off to grade and finish all unformed upper surfaces. Do not use mortar topping for surfaces constructed under this Section.

After the concrete has been struck off, float the surface with a suitable float. Give bridge sidewalks a wood float or broom finish, or stripe them with a brush.

Slightly slope the tops of caps and piers between bearing areas from the center toward the edge, and slope the tops of abutment and transition bent caps from the backwall to the edge, as directed, so that water drains from the surface. Give the concrete a smooth trowel finish. Construct bearing areas for steel units in accordance with

Section 441.3.K.5, “Bearing and Anchorage Devices.” Give the bearing area under the expansion ends of concrete slabs and slab and girder spans a steel-trowel finish to the exact grades required. Give bearing areas under elastomeric bearing pads or nonreinforced bearing seat buildups a textured, wood float finish. Do not allow the bearing area to vary from a level plane more than 1/16 in. in all directions.

Cast bearing seat buildups or pedestals for concrete units integrally with the cap or with a construction joint. Provide a latex-based mortar, an epoxy mortar, or an approved proprietary bearing mortar for bearing seat buildups cast with a construction joint. Mix mortars in accordance with the manufacturer’s recommendations. Construct pedestals of Class C concrete, reinforced as shown on the plans or as indicated in Figure 1 and Figure 2.

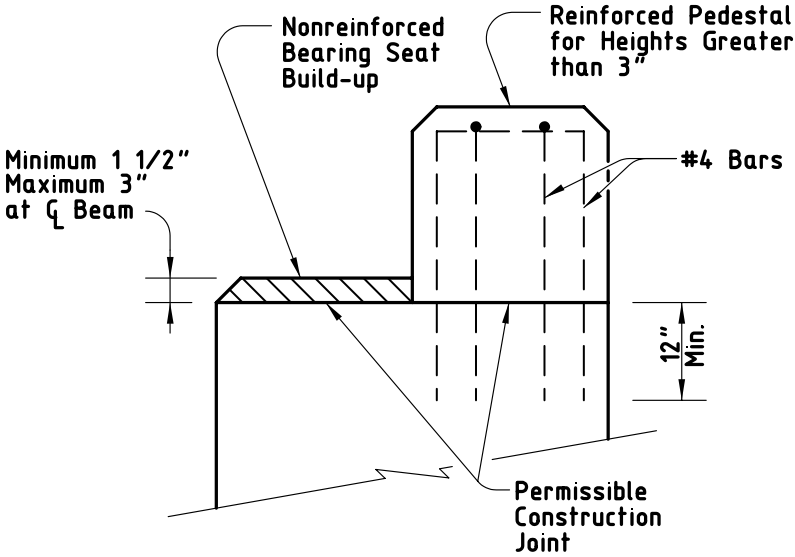

Figure 1
Section through bearing seat buildups.

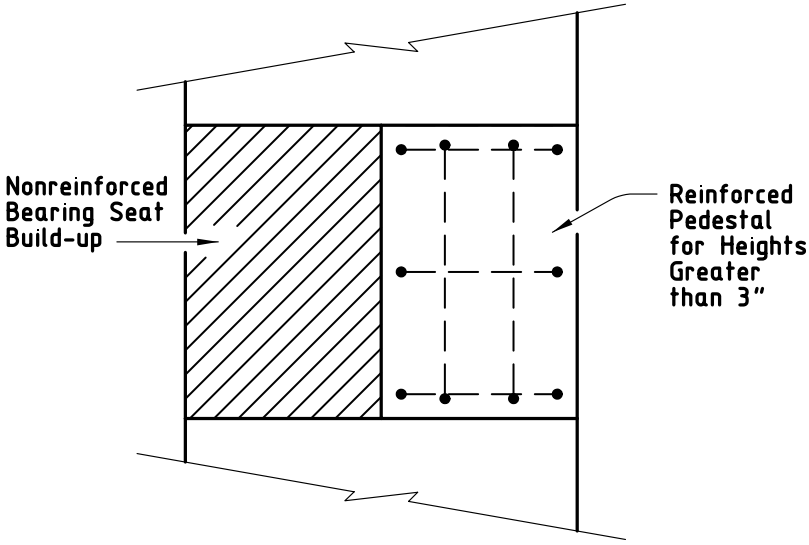

Figure 2
Plan view of bearing seat buildups.

I. **Finish of Bridge Slabs.** Provide camber for specified vertical curvature and transverse slopes.

For concrete flat slab and concrete slab and girder spans cast in place on falsework, provide additional camber to offset the initial and final deflections of the span as indicated in the plans. For concrete slab and girder spans using pan forms, provide camber of approximately 3/8 in. for 30-ft. spans and 1/2 in. for 40-ft. spans to offset initial and final deflections unless otherwise directed. For concrete flat slab and concrete slab and girder spans not using pan forms, when dead load deflection is not shown on the plans, provide a camber of 1/8 in. per 10 ft. of span length but no more than 1/2 in.

Provide a camber of 1/4 in. in addition to deflection for slabs without vertical curvature on steel or prestressed concrete beams.

Use work bridges or other suitable facilities to perform all finishing operations and to provide access, if necessary, for the Engineer to check measurements for slab thickness and reinforcement cover.

As soon as the concrete has been placed and vibrated in a section wide enough to permit working, level, strike off, and screed the surface, carrying a slight excess of concrete ahead of the screed to fill all low spots.

Move longitudinal screeds across the concrete with a saw-like motion while their ends rest on headers or templates set true to the roadway grade or on the adjacent finished slab. Move transverse screeds longitudinally approximately 1/5 of the drum length for each complete out-and-back pass of the carriage.

Screed the surface of the concrete enough times and at intervals to produce a uniform surface true to grade and free of voids.

Work the screeded surface to a smooth finish with a long-handled wood or metal float or hand-float it from work bridges over the slab. Floating may not be necessary if the pan float attached to a transverse screed produces an acceptable finish. Avoid overworking the surface of the concrete. Avoid overuse of finish water.

Perform sufficient checks, witnessed by the Engineer, with a long-handled 16-ft. straightedge on the plastic concrete to ensure that the final surface will be within specified tolerances. Make the check with the straightedge parallel to the centerline. Lap each pass half over the preceding pass. Remove all high spots, and fill and float all depressions over 1/16 in. deep with fresh concrete. Continue checking and floating until the surface is true to grade and free of depressions, high spots, voids, or rough spots. Fill screed-rail support holes with concrete, and finish them to match the top of the slab.

Finish the concrete surface to a uniform texture using a carpet drag, burlap drag, or broom finish. Finish the surface to a smooth sandy texture without blemishes, marks, or scratches deeper than 1/16 in. Apply the surface texturing using a work bridge or platform immediately after completing the straightedge checks. Draw the carpet or burlap drag longitudinally along the concrete surface, adjusting the surface contact area or pressure to provide a satisfactory coarsely textured surface. A broom finish may be performed using a fine bristle broom transversely.

Coat the concrete surface immediately after the carpet or burlap drag, or broom finish with a single application of evaporation retardant at a rate recommended by the manufacturer. Do not allow more than 10 min. to elapse between the texturing at any location and application of evaporation retardant. The evaporation retardant may be applied

using the same work bridge used for surface texturing. Do not work the concrete surface once the evaporation retardant has been applied.

Apply interim and final curing in accordance with Section 420.4.J, "Curing Concrete."

The Contractor is responsible for the ride quality of the finished bridge slab. The Engineer will use a 10-ft. straightedge (1/8 in. in 10 ft.) to verify ride quality and to determine locations where corrections are needed. If the Engineer determines that the ride quality is unacceptable, submit a plan for approval to produce a ride of acceptable quality. Make all corrections for ride before saw-cutting grooves.

Saw-cut grooves in the hardened concrete of bridge slabs, bridge approach slabs, and direct-traffic culverts to produce the final texturing after completion of the required curing period. Cut grooves perpendicular to the structure centerline. Cut grooves continuously across the slab to within 18 in. of the barrier rail, curb, or median divider. At skewed metal expansion joints in bridge slabs, adjust groove cutting by using narrow-width cutting heads so that all grooves end within 6 in. of the joint, measured perpendicular to the centerline of the metal joint. Leave no ungrooved surface wider than 6 in. adjacent to either side of the joint. Ensure that the minimum distance to the first groove, measured perpendicular to the edge of the concrete joint or from the junction between the concrete and the metal leg of the joint, is 1 in. Cut grooves continuously across construction joints or other joints in the concrete that are less than 1/2 in. wide. Apply the same procedure described above where barrier rails, curbs, or median dividers are not parallel to the structure centerline to maintain the 18-in. maximum dimension from the end of the grooves to the gutter line. Cut grooves continuously across formed concrete joints.

When the plans call for a concrete overlay to be placed on the slab (new construction) or on prestressed concrete box beams or other precast elements, give a carpet drag, burlap drag, or broom finish to all concrete surfaces to be overlaid. Saw-grooving is not required in this case. Provide an average texture depth for the finish of approximately 0.035 in. with no individual test falling below 0.020 in., unless otherwise shown on the plans, when tested in accordance with Tex-436-A. If the texture depth falls below what is intended, revise finishing procedures to produce the desired texture.

When the plans require an asphalt seal, with or without overlay, on the slab (new construction), on prestressed concrete box beams, or on other precast elements, give all concrete surfaces to be covered a lightly

textured broom or carpet drag finish. Provide an average texture depth of approximately 0.025 in. when tested in accordance with Tex-436-A.

J. Curing Concrete. Obtain approval of the proposed curing methods, equipment, and materials before placing concrete. The Engineer may require the same curing methods for like portions of a single structure. Inadequate curing or facilities may delay all concrete placement on the job until remedial action is taken.

A curing day is a calendar day when the temperature, taken in the shade away from artificial heat, is above 50°F for at least 19 hr. or, on colder days if the temperature of all surfaces of the concrete is maintained above 40°F, for the entire 24 hr. The required curing period begins when all concrete has attained its initial set. Tex-440-A may be used to determine when the concrete has attained its initial set.

Cure all concrete for 4 consecutive days except as noted in Table 1.

Table 1
Exceptions to 4-Day Curing

Description	Type of Cement	Required Curing Days
Upper surfaces of bridge slabs, top slab of direct-traffic culverts, and concrete overlays	I or III	8
	II or I/II	10
	All types with supplementary cementing materials	10
Concrete piling buildups	All	6

For upper surfaces of bridge slabs, bridge approach slabs, median and sidewalk slabs, and culvert top slabs constructed using Class S concrete, apply interim curing using a Type 1-D curing compound as soon as possible after application of the evaporation retardant and after the water sheen has disappeared, but no more than 45 min. after application of the evaporation retardant. Apply membrane interim curing using a work bridge or other approved apparatus to ensure a uniform application. Water-cure for final curing in accordance with this Section, starting as soon as possible without damaging the surface finish. Maintain the water curing for the duration noted in Table 1. Place polyethylene sheeting, burlap-polyethylene blankets, laminated mats, or insulating curing mats in direct contact with the slab when the air temperature is expected to drop below 40°F during the first 72 hr. of the curing period. Weigh down these curing materials with dry mats to maintain direct contact with the concrete and to provide insulation

against cold weather. Supplemental heating or insulation may be required in cold and wet weather if the insulating cotton mats become wet or if the concrete drops below the specified curing temperature. Avoid applying heat directly to concrete surfaces.

For the top surface of any concrete unit upon which concrete is to be placed and bonded at a later interval (stub walls, risers, etc.) and other superstructure concrete (curbs, wingwalls, parapet walls, etc.), use only water curing in accordance with this Section.

Cure all other concrete as specified in the pertinent Items. Use the following methods for curing concrete, subject to the requirements of this Item.

1. **Form Curing.** When forms are left in intimate contact with the concrete, other curing methods are not required except for exposed surfaces and for cold weather protection. If forms are removed before the 4-day required curing period, use another approved curing method.
2. **Water Curing.** Keep all exposed surfaces of the concrete wet continuously for the required curing time. Use water curing that meets the requirements for concrete mixing water in Section 421.2.D, "Water." Do not use seawater or water that stains or leaves an unsightly residue.
   a. **Wet Mats.** Keep the concrete continuously wet by maintaining wet cotton mats in direct contact with the concrete for the required curing time. If needed, place damp burlap blankets made from 9-oz. stock on the damp concrete surface for temporary protection before applying cotton mats. Then place the dry mats and wet them immediately after they are placed. Weight the mats adequately to provide continuous contact with all concrete. Cover surfaces that cannot be cured by direct contact with mats, forming an enclosure well anchored to the forms or ground so that outside air cannot enter the enclosure. Provide sufficient moisture inside the enclosure to keep all surfaces of the concrete wet.
   b. **Water Spray.** Overlap sprays or sprinklers to keep all unformed surfaces continuously wet.
   c. **Ponding.** Cover the surfaces with at least 2 in. of clean granular material, kept wet at all times, or at least 1 in. deep water. Use a dam to retain the water or saturated granular material.

3. **Membrane Curing.** Unless otherwise shown on the plans, choose either Type 1-D or Type 2 membrane-curing compound when membrane curing is permitted. Type 1-D (Resin Base Only) is required for interim curing bridge slabs and top slabs of direct-traffic culverts and all other surfaces that require a higher grade of surface finish. For substructure concrete provide only 1 type of curing compound on any 1 structure.

   Apply membrane curing just after free moisture has disappeared at a rate of approximately 180 sq. ft. per gallon. Do not spray curing compound on projecting reinforcing steel or concrete that will later form a construction joint. Do not apply membrane curing to dry surfaces. Dampen formed surfaces and surfaces that have been given a first rub so that they are moist at the time of application of the membrane.

   When membrane is used for complete curing, leave the film unbroken for the minimum curing period specified. Correct damaged membrane immediately by reapplication of membrane. Polyethylene sheeting, burlap-polyethylene mats, or laminated mats in close contact with the concrete surfaces are equivalent to membrane curing.

K. Removal of Forms and Falsework. Unless otherwise directed, forms for vertical surfaces may be removed after the concrete has aged 12 hr. after initial set provided the removal can be done without damage to the concrete. Keep forms for mass placements, defined in Section 420.4.G.14, "Mass Placements," in place for 4 days following concrete placement.

Remove forms for inside curb faces and for bridge rails whenever removal can be done without damage to the curb or railing.

Leave in place weight-supporting forms and falsework spanning more than 1 ft. for all bridge components and culvert slabs except as directed otherwise until the concrete has attained a compressive strength of 2,500 psi. Remove forms for other structural components as necessary.

Remove inside forms (walls and top slabs) for box culverts and sewers after concrete has attained a compressive strength of 1,800 psi if an approved overhead support system is used to transfer the weight of the top slab to the walls of the box culvert or sewer before removal of the support provided by the forms.

Forms or parts of forms may be removed only if constructed to permit removal without disturbing forms or falsework required to be left in place for a longer period on other portions of the structure.

Remove all metal appliances used inside forms for alignment to a depth of at least 1/2 in. from the concrete surface. Make the appliances so that metal may be removed without undue chipping or spalling of the concrete, and so that it leaves a smooth opening in the concrete surface when removed. Do not burn off rods, bolts, or ties.

Remove all forms and falsework unless otherwise directed.

L. Defective Work. Repair defective work as soon as possible. Remove and replace at the expense of the Contractor any defect that cannot be repaired to the satisfaction of the Engineer.

M. Ordinary Surface Finish. Apply an ordinary surface finish to all concrete surfaces as follows:

- Chip away all loose or broken material to sound concrete where porous, spalled, or honeycombed areas are visible after form removal.
- Repair spalls by saw-cutting and chipping at least 1/2 in. deep, perpendicular to the surface to eliminate feather edges. Repair shallow cavities using a latex adhesive grout, cement mortar, or epoxy mortar as approved. Repair large areas using concrete as directed or approved.
- Clean and fill holes or spalls caused by the removal of form ties, etc., with latex grout, cement grout, or epoxy grout as approved. Fill only the holes. Do not blend the patch with the surrounding concrete. On surfaces to receive a rub finish in accordance with Item 427, "Surface Finishes for Concrete," chip out exposed parts of metals chairs to a depth of 1/2 in. and repair the surface.
- Remove all fins, runs, drips, or mortar from surfaces that will be exposed. Smooth all form marks and chamfer edges by grinding or dry-rubbing.
- Ensure that all repairs are dense, well bonded, and properly cured. Finish exposed large repairs to blend with the surrounding concrete where a higher class of finish is not specified.

Unless noted otherwise, apply an ordinary surface finish as the final finish to the following exposed surfaces:

- inside and top of inlets,
- inside and top of manholes,
- inside of sewer appurtenances,
- inside of culvert barrels,

- bottom of bridge slabs between girders or beams, and
- vertical and bottom surfaces of interior concrete beams or girders.

Form marks and chamfer edges do not need to be smoothed for the inside of culvert barrels and the bottom of bridge slabs between girders or beams.

420.5. Measurement. This Item will be measured by the cubic yard, square yard, foot, square foot, or by each structure.

A. General. Concrete quantities will be based on the dimensions shown on the plans or those established in writing by the Engineer.

In determining quantities, no deductions will be made for chamfers less than 2 in. or for embedded portions of steel or prestressed concrete beams, piling, anchor bolts, reinforcing steel, drains, weep holes, junction boxes, electrical or telephone conduit, ducts and voids for prestressed tendons, or embedded portions of light fixtures.

For slab and girder spans using pan forms, a quantity will be included for the screed setting required to provide proper camber in the roadway surface after form removal.

For slabs on steel or prestressed concrete beams, an estimated quantity for the haunch between the slab and beams will be included. No measurement will be made during construction for variation in the amount of haunch concrete due to variations in camber of the beams.

For cast-in-place slabs on slab beams, double-T beams, or box beams, the combination of span length, theoretical camber in beams, computed deflections, and plan vertical curve will be taken into account in determining the quantity for the slab.

Additional concrete that may be required by an adjustment of the profile grade line during construction, to insure proper slab thickness, will not be measured for payment.

Variation in concrete headwall quantity incurred when an alternate bid for pipe is permitted will not be cause for payment adjustment.

Mass placements may be either a plans quantity item or measured in place as indicated.

Quantities revised by a change in design, measured as specified, will be increased or decreased and included for payment.

B. Plans Quantity. Structure elements designated in Table 2 and measured by the cubic yard are plans quantity measurement items. The quantity to be paid for plans quantity items is the quantity shown in the

proposal unless modified by Article 9.2, "Plans Quantity Measurement." Additional measurements or calculations will be made if adjustments of quantities are required.

No adjustment will be made for footings or other in-ground elements where the Contractor has been allowed to place concrete in an excavation without forms.

Table 2
Plans Quantity Payment
(Cubic Yard Measurement Only)

Culverts and culvert wing walls	Abutments
Headwalls for pipe	Slab and girder spans (pan form)
Retaining walls	Footings
Inlets and manholes	Pile bent caps
Shear key concrete for box and slab beams	Concrete wearing surface on pre-cast box beams, slab beams or double-T beams
Bridge approach slabs	Cast-in-place concrete slab spans

Note: Other structure elements, including pier and bent concrete, may be paid for as "plans quantity" when shown on the plans.

C. **Measured in Place.** Items not paid for as "plans quantity" will be measured in place.

420.6. Payment. The work performed and materials furnished in accordance with this Item and measured as provided under "Measurement" will be paid for at the unit price bid for the various structure elements specified of the various classes of concrete. Mass placements, as defined in Section 420.4.G.14, "Mass Placements," will be paid for separately for the various classes of concrete. This price is full compensation for furnishing, hauling, and mixing concrete materials; furnishing, bending, fabricating, splicing, welding and placing the required reinforcement; clips, blocks, metal spacers, ties, wire, or other materials used for fastening reinforcement in place; placing, finishing, curing, and grooving concrete; applying ordinary surface finish; furnishing and placing drains, metal flashing strips, and expansion-joint material; excavation, subgrade preparation, and disposal of excavated material for bridge approach slabs; and forms and falsework, equipment, labor, tools, and incidentals.

Diaphragm concrete will not be paid for directly but is subsidiary to the slab unless otherwise shown on the plans.

Design and installation of foundations for falsework is at the Contractor's expense.

The following procedure will be used to evaluate concrete where 1 or more project acceptance test specimens fail to meet the required design strength specified in Item 421, "Hydraulic Cement Concrete," or in the plans:

- The concrete for a given placement will be considered structurally adequate and accepted at full price if the average of all test results for specimens made at the time of placement meets the required design strength provided that no single test result is less than 85% of the required design strength.
- The Engineer will perform a structural review of the concrete to determine its adequacy to remain in service if the average of all test results for specimens made at the time of placement is less than the required design strength or if any test results are less than 85% of the required design strength. If cores are required to determine the strength of the in-situ concrete, take cores at locations designated by the Engineer in accordance with Tex-424-A. The coring and testing of the cores will be at the Contractor's expense. The Engineer will test the cores.
- If all of the tested cores meet the required design strength, the concrete will be paid for at the full price.
- If any of the tested cores do not meet the required design strength but the average strength attained is determined to be structurally adequate, the Engineer will determine the limits of the pay adjustment. The average strength of the cores tested will be used in the pay adjustment formula.
- Remove concrete that is not structurally adequate.
- Concrete that has been determined to be structurally adequate may be accepted at an adjusted price based on the following formula:

  $A = 0.10Bp + 0.75(Sa/Ss)^2\ Bp$

  where:

  A = Amount to be paid per unit of measure for the entire placement in question
  Sa = Actual strength from cylinders or cores. Use values from cores, if taken.
  Ss = Minimum required strength (specified)
  Bp = Unit bid price.

- The decision to reject structurally inadequate concrete or to apply the pay adjustment will be made no later than 56 days after placement.

ITEM 432

RIPRAP

432.1. Description. Furnish and place concrete, stone, cement-stabilized, or special riprap.

432.2. Materials. Furnish materials in accordance with the following:

- Item 420, "Concrete Structures"
- Item 421, "Hydraulic Cement Concrete"
- Item 431, "Pneumatically Placed Concrete"
- Item 440, "Reinforcing Steel"
- DMS-6200, "Filter Fabric."

A. Concrete Riprap. Use Class B Concrete unless otherwise shown on the plans.

B. Pneumatically Placed Concrete Riprap. Use Class II concrete that meets Item 431, "Pneumatically Placed Concrete," unless otherwise shown.

C. Stone Riprap. Unless otherwise shown on the plans, use durable natural stone with a minimum bulk specific gravity of 2.40 as determined by Tex-403-A. Provide stone that, when tested in accordance with Tex-411-A, has a maximum weight loss of 18% after 5 cycles of magnesium sulfate solution and 14% after 5 cycles of sodium sulfate solution.

For all types of stone riprap perform a size verification test on the first 5,000 sq. yd. of finished riprap stone at a location determined by the Engineer. Weigh each stone in a square test area with the length of each side of the square equal to 3 times the specified riprap thickness. The weight of the stones, excluding spalls, should be as specified below. Additional tests may be required. Do not place additional riprap until the initial 5,000 sq. yd. of riprap has been approved.

When specified, provide grout or mortar in accordance with Item 421,"Hydraulic Cement Concrete." Provide grout with a consistency that will flow into and fill all voids.

Provide filter fabric in accordance with DMS-6200, "Filter Fabric." For protection stone riprap, provide Type 2 filter fabric unless otherwise shown on the plans. For Type R, F, or Common stone riprap, provide Type 2 filter fabric when shown on the plans.

1. **Type R.** Use stones between 50 and 250 lb. with a minimum of 50% of the stones heavier than 100 lb.
2. **Type F.** Use stones between 50 and 250 lb. with a minimum of 40% of the stones heavier than 100 lb. Use stones with at least 1 broad flat surface.
3. **Common.** Use stones between 50 and 250 lb. Use stones that are at least 3 in. in their least dimension. Use stones that are at least twice as wide as they are thick. When shown on the plans or approved, material may consist of broken concrete removed under the Contract or from other approved sources. Before placement of each piece of broken concrete, cut exposed reinforcement flush with all surfaces.
4. **Protection.** Use boulders or quarried rock that meets the gradation requirements of Table 1. Both the width and the thickness of each piece of riprap must be at least 1/3 of the length. When shown on the plans or as approved, material may consist of broken concrete removed under the Contract or from other approved sources. Before placement of each piece of broken concrete, cut exposed reinforcement flush with all surfaces. Determine gradation of the finished, in-place, riprap stone under the direct supervision of the Engineer in accordance with Tex-411-A, Part II.

Table 1
In-Place Protection Riprap Gradation Requirements

Thickness	Maximum Size (lb.)	90% Size[1] (lb.)	50% Size[1] (lb.)	8% Size[1], Minimum (lb.)
12 in.	200	80–180	30–75	3
15 in.	320	170–300	60–165	20
18 in.	530	290–475	105–220	22
21 in.	800	460–720	175–300	25
24 in.	1,000	550–850	200–325	30
30 in.	2,600	1,150–2,250	400–900	40

1. As defined in Tex-401-A, Part II.

Provide bedding stone that in-place meets the gradation requirements shown in Table 2 or as otherwise shown on the plans. Determine size distribution in accordance with Tex-401-A, Part I.

Table 2
Protection Riprap Bedding Material Gradation Requirements

Sieve Size (Sq. Mesh)	% by Weight Passing
3 in.	100
1-1/2 in.	50–80
3/4 in.	20–60
No. 4	0–15
No. 10	0–5

D. Cement-Stabilized Riprap. Provide aggregate that meets Item 247, "Flexible Base," for the type and grade shown on plans. Use cement-stabilized riprap with 7% hydraulic cement by dry weight of the aggregate.

E. Special Riprap. Furnish materials for special riprap according to the plans.

432.3. Construction. Dress slopes and protected areas to the line and grade shown on the plans before the placement of riprap. Place riprap and toe walls according to details and dimensions shown on the plans or as directed.

A. Concrete Riprap. Reinforce concrete riprap with 6 × 6 – W2.9 × W2.9 welded wire fabric or with No. 3 or No. 4 reinforcing bars spaced at a maximum of 18 in. in each direction unless otherwise shown. Alternative styles of welded wire fabric that provide at least 0.058 sq. in. of steel per foot in both directions may be used if approved. A combination of welded wire fabric and reinforcing bars may be provided when both are permitted. Provide a minimum 6-in. lap at all splices. At the edge of the riprap, provide a minimum horizontal cover of 1 in. and a maximum cover of 3 in. Place the first parallel bar at most 6 in. from the edge of concrete. Use approved supports to hold the reinforcement approximately equidistant from the top and bottom surface of the slab. Adjust reinforcement during concrete placement to maintain correct position.

As directed, sprinkle or sprinkle and consolidate the subgrade before the concrete is placed. All surfaces must be moist when concrete is placed.

After placing the concrete, compact and shape it to conform to the dimensions shown on plans. After it has set sufficiently to avoid slumping, finish the surface with a wood float to secure a smooth surface or broom finish as approved.

Immediately after the finishing operation, cure the riprap according to Item 420, "Concrete Structures."

B. Stone Riprap. Provide the following types of stone riprap when shown on the plans:

- Dry Riprap. Dry riprap is stone riprap with voids filled with only spalls or small stones.
- Grouted Riprap. Grouted riprap is Type R, F, or Common stone riprap with voids grouted after all the stones are in place.
- Mortared Riprap. Mortared riprap is Type F stone riprap laid and mortared as each stone is placed.

Use spalls and small stones lighter than 25 lb. to fill open joints and voids in stone riprap, and place to a tight fit.

Do not place mortar or grout when the air temperature is below 35°F. Protect work from rapid drying for at least 3 days after placement.

Unless otherwise approved, place filter fabric with the length running up and down the slope. Ensure fabric has a minimum overlap of 2 ft. Secure fabric with nails or pins. Use nails at least 2 in. long with washers or U-shaped pins with legs at least 9 in. long. Space nails or pins at a maximum of 10 ft. in each direction and 5 ft. along the seams. Alternative anchorage and spacing may be used when approved.

1. **Type R.** Construct riprap as shown in Figure 1 and as shown on the plans. Place stones in a single layer with close joints so that most of their weight is carried by the earth and not by the adjacent stones. Place the upright axis of the stones at an angle of approximately 90° to the embankment slope. Place each course from the bottom of the embankment upward with the larger stones in the lower courses.

   Fill open joints between stones with spalls. Place stones to create a uniform finished top surface. Do not exceed a 6-in. variation between the tops of adjacent stones. Replace, embed deeper, or chip away stones that project more than the allowable amount above the finished surface.

   When the plans require Type R stone riprap to be grouted, prevent earth, sand, or foreign material from filling the spaces between the stones. After the stones are in place, wet the stones thoroughly, fill the spaces between the stones with grout, and pack. Sweep the surface of the riprap with a stiff broom after grouting.

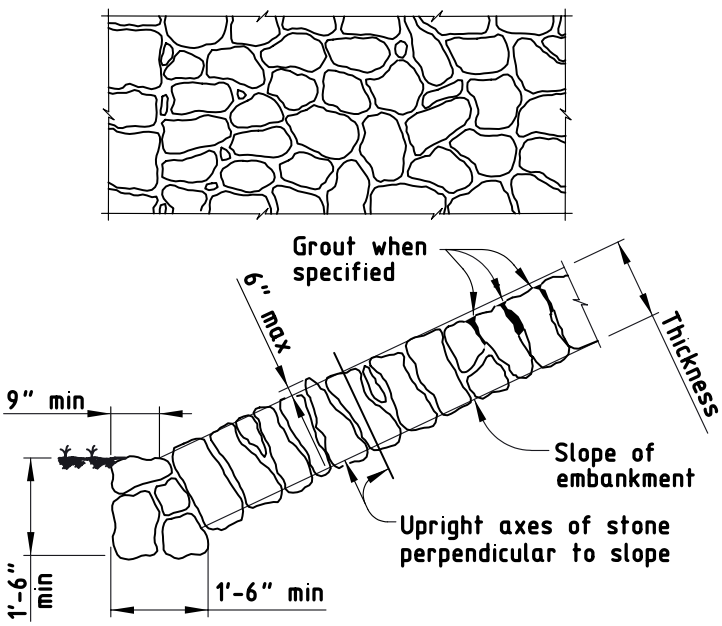

Figure 1
Type R stone riprap, dry or grouted.

2. **Type F.**

   a. **Dry Placement.** Construct riprap as shown in Figure 2. Set the flat surface on a prepared horizontal earth bed, and overlap the underlying course to secure a lapped surface. Place the large stones first, roughly arranged in close contact. Fill the spaces between the large stones with suitably sized stones placed to leave the surface evenly stepped and conforming to the contour required. Place stone to drain water down the face of the slope.

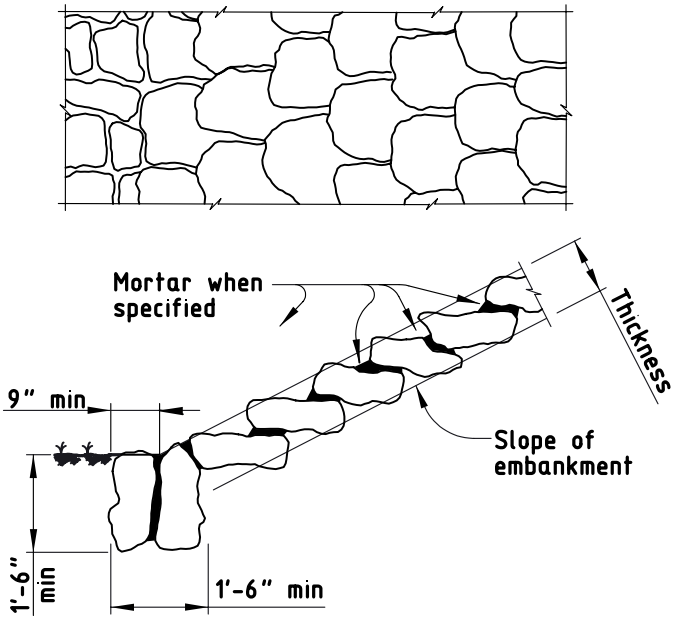

Figure 2
Type F stone riprap, dry or mortared.

b. Grouting. Construct riprap as shown in Figure 3. Size, shape, and lay large flat-surfaced stones to produce an even surface with minimal voids. Place stones with the flat surface facing upward parallel to the slope. Place the largest stones near the base of the slope. Fill spaces between the larger stones with stones of suitable size, leaving the surface smooth, tight, and conforming to the contour required. Place the stones to create a plane surface with a maximum variation of 6 in. in 10 ft. from true plane. Provide the same degree of accuracy for warped and curved surfaces. Prevent earth, sand or foreign material from filling the spaces between the stones. After the stones are in place, wet them thoroughly, fill the spaces between them with grout, and pack. Sweep the surface with a stiff broom after grouting.

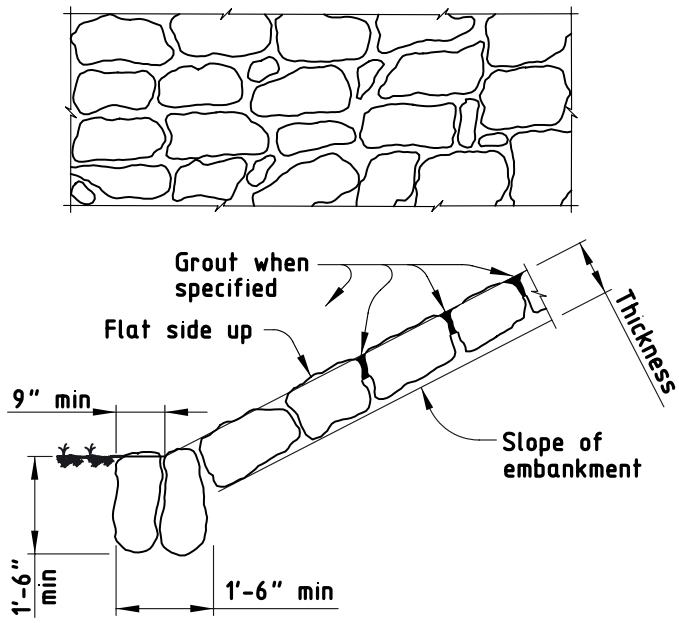

Figure 3
Type F stone riprap, grouted.

c. **Mortaring.** Construct riprap as shown in Figure 2. Lap courses as described for dry placement. Before placing mortar, wet the stones thoroughly. As the larger stones are placed, bed them in fresh mortar and shove adjacent stones into contact with one another. After completing the work, spread all excess mortar forced out during placement of the stones uniformly over them to fill all voids completely. Point up all joints roughly either with flush joints or with shallow, smooth-raked joints as directed.

3. **Common.** Construct riprap as shown in Figure 4. Place stones on a bed excavated for the base course. Bed the base course of stone well into the ground with the edges in contact. Bed and place each succeeding course in even contact with the preceding course. Use spalls and small stones to fill any open joints and voids in the riprap. Ensure the finished surface presents an even, tight surface, true to the line and grades of the typical sections.

   When the plans require grouting common stone riprap, prevent earth, sand, or foreign material from filling the spaces between the stones. After the stones are in place, wet them thoroughly, fill the spaces between them with grout, and pack. Sweep the surface with a stiff broom after grouting.

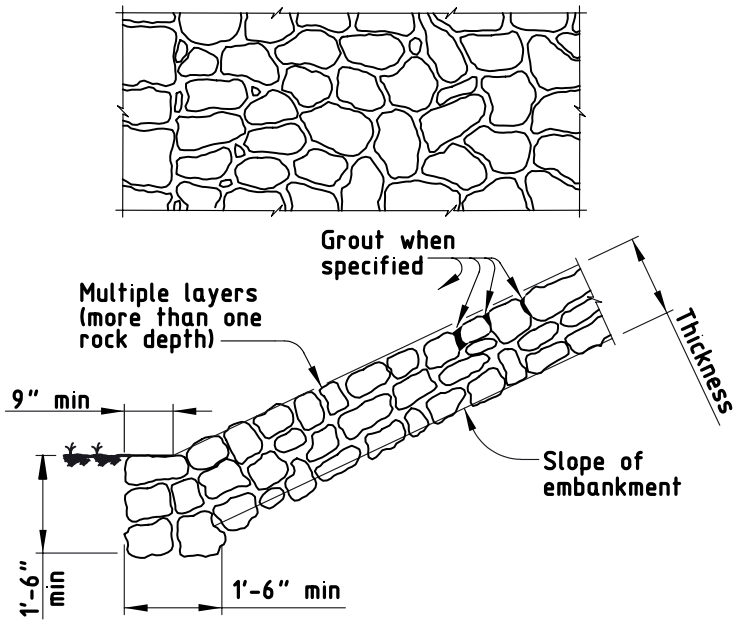

Figure 4
Common stone riprap, dry or grouted.

4. **Protection.** Construct riprap as shown in Figure 5. Place riprap stone on the slopes within the limits shown on the plans. Place stone for riprap on the bedding material to produce a reasonably well-graded mass of riprap with the minimum practicable percentage of voids. Construct the riprap to the lines and grades shown on the plans or staked in the field. A tolerance of +6 in. and −0 in. from the slope line and grades shown on the plans is allowed in the finished surface of the riprap. Place riprap to its full thickness in a single operation. Avoid displacing the bedding material. Ensure that the entire mass of stones in their final position is free from objectionable pockets of small stones and clusters of larger stones. Do not place riprap in layers, and do not place it by dumping it into chutes, dumping it from the top of the slope, pushing it from the top of the slope, or any method likely to cause segregation of the various sizes. Obtain the desired distribution of the various sizes of stones throughout the mass by selective loading of material at the quarry or other source or by other methods of placement that will produce the specified results. Rearrange individual stones by mechanical equipment or by hand if necessary to obtain a reasonably well-graded distribution of stone sizes.

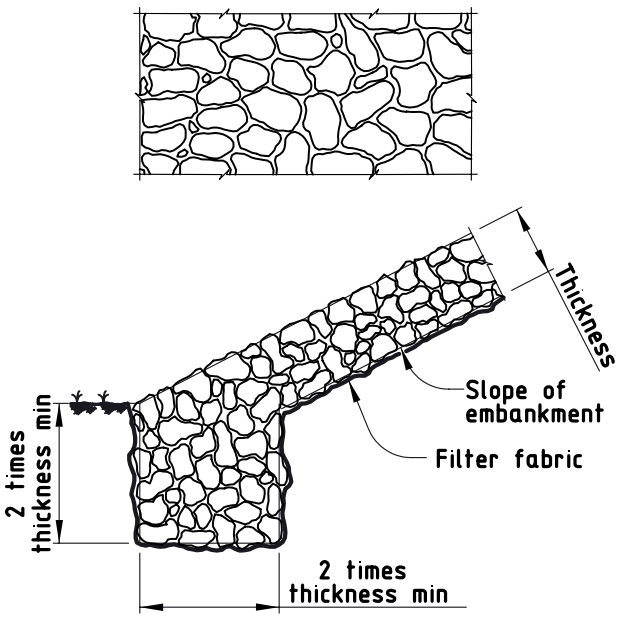

Figure 5
Protection stone riprap.

C. Pneumatically Placed Concrete Riprap, Class II. Meet Item 431, "Pneumatically Placed Concrete." Provide reinforcement following the details on the plans and Item 440, "Reinforcing Steel." Support reinforcement with approved supports throughout placement of concrete.

Give the surface a wood-float finish or a gun finish as directed. Immediately after the finishing operation, cure the riprap with membrane-curing compound in accordance with Item 420, "Concrete Structures."

D. Cement-Stabilized Riprap. Follow the requirements of the plans and the provisions for concrete riprap except when reinforcement is not required. The Engineer will approve the design and mixing of the cement-stabilized riprap.

E. Special Riprap. Construct special riprap according to the plans.

432.4. Measurement. This Item will be measured by the cubic yard of material complete in place. Volume will be computed on the basis of the measured area in place and the thickness and toe wall width shown on the plans.

For stone riprap for protection, the quantity of the bedding material to be paid for will be measured by the cubic yard as computed from the measured area in place and the bedding thickness shown on the plans.

432.5. Payment. The work performed and materials furnished in accordance with this Item and measured as provided under "Measurement" will be paid for at the unit price bid for "Riprap" of the type, thickness, and void-filling technique (Dry, Grout, Mortar) specified, as applicable. This price is full compensation for furnishing, hauling, and placing riprap and for filter fabric, expansion joint material, concrete and reinforcing steel, grout and mortar, scales, test weights, equipment, labor, tools, and incidentals.

Payment for excavation of toe wall trenches, for all necessary excavation below natural ground or bottom of excavated channel, and for shaping of slopes for riprap will be included in the unit price bid per cubic yard of riprap.

When bedding is required for protection stone riprap, payment will be made at the unit price for "Bedding Material" of the thickness specified. This price is full compensation for furnishing, hauling, placing, and maintaining the bedding material until placement of the riprap cover is completed and accepted; excavation required for placement of bedding material; and equipment, scales, test weights, labor, tools, and incidentals. No payment will be made for excess thickness of bedding nor for material required to replace embankment material lost by rain wash, wind erosion, or otherwise.

ITEM 465

MANHOLES AND INLETS

465.1. Description. Construct manholes and inlets, complete in place or to the stage detailed, including furnishing and installing frames, grates, rings and covers. Drainage junction boxes are classified as manholes.

465.2. Materials. Furnish materials in accordance with the following:

- Item 420, "Concrete Structures"
- Item 421, "Hydraulic Cement Concrete"
- Item 440, "Reinforcing Steel"
- Item 471, "Frames, Grates, Rings, and Covers."

Precast manholes, inlets, risers, and appurtenances are acceptable unless otherwise shown. Alternate designs for precast items must be acceptable to the Engineer and not deviate from the functional dimensions given. Alternate designs are to be designed and sealed by a licensed professional engineer.

A. Concrete. Furnish Class A concrete for cast-in-place manholes and inlets unless otherwise shown on the plans. Furnish Class A concrete or concrete meeting ASTM C 478 for precast manholes and inlets. Air-entrained concrete will not be required in precast concrete members.

B. Mortar. Furnish mortar composed of 1 part hydraulic cement and 2 parts clean sand. Hydrated lime or lime putty may be added to the mix to a maximum of 10% by weight of the total dry mix.

C. Bricks. Furnish first-quality, sound, perfectly shaped bricks. Provide clay or shale bricks that are homogeneous and thoroughly and uniformly hard-burned and that meet ASTM C 32, Grade MS or MM. Provide concrete bricks meeting ASTM C 55, Type I (Grade S-I). The maximum allowable water absorption of completely dry bricks is 16% by weight when submerged in water for 24 hr.

D. Concrete Blocks. Provide concrete blocks that meet ASTM C 139.

E. Cast Iron or Aluminum. Provide supports and steps conforming to the shape and dimensions shown on the plans that meet the requirements of ASTM A 48, Class 35B, for gray iron castings or ASTM A 536, Grade 65-45-12, for ductile iron castings. Steps may also be aluminum meeting ASTM B 221, Alloy 6005-T5. Provide steps in accordance with ASTM C 478, Section 16, "Steps and Ladders."

F. Timber. Provide sound timber for temporary covers when used with Stage I construction (see Section 465.3, "Construction") that is a minimum of 3 in. nominal thickness and reasonably free of knots and warps.

G. Other Materials. Commercial-type hardware of other materials may be used with prior approval.

465.3. Construction.

A. General. All types of manholes and inlets may be built either in 1 stage or in 2 stages, described as Stage I and Stage II. Build manholes and inlets designed to match

the final roadway surface in stages. Construct Stage II after the pavement structure is substantially complete unless otherwise approved by the Engineer.

Construct the Stage I portion of manholes and inlets as shown on the plans or as specified in this Item. Furnish and install a temporary cover as approved by the Engineer.

For Stage I construction of cast iron or steel inlet units, furnish and install the sewer pipe and a temporary plug for the exposed end of the sewer pipe from the storm sewer to a point below the top of curb indicated on the plans.

For Stage II, construct the remaining wall height and top of manhole or inlet and furnish and install any frames, grates, rings and covers, manhole steps, curb beams, or collecting basins required.

Construct precast manholes and inlets in accordance with Item 420, "Concrete Structures," or ASTM C 478. Construct cast-in-place manholes and inlets in accordance with Item 420. Forms will be required for all concrete walls. Multi-project fabrication plants (as defined in Item 424, "Precast Concrete Structures (Fabrication)") that produce manholes and inlets will be approved by the Construction Division in accordance with DMS-7340, "Qualification Procedure for Multi-Project Fabrication Plants of Precast Concrete Manholes and Inlets." The Construction Division maintains a list of approved multiproject plants. Outside wall forms for cast-in-place concrete may be omitted with the approval of the Engineer if the surrounding material can be trimmed to a smooth vertical face. The outside form for concrete bases supporting brick walls may be omitted. Cast steps into the concrete walls when the concrete is placed, or drill and grout steps in place after concrete placement. Mortar steps into joints for brick walls. Use a full bed of mortar for brick work so the brick will thoroughly bond to the mortar. Construct full mortar joints no more than 1/2 in. wide for brick walls. Furnish a header course or bond course (laid perpendicular to the preceding courses) every fifth course of brick.

B. Manholes and Inlets for Precast Concrete Pipe Sewers. Construct manholes and inlets for precast concrete pipe sewers as soon as is practicable after sewer lines into or through the manhole or inlet locations are completed. Neatly cut all sewers at the inside face of the walls of the manhole or inlet and point up with mortar.

C. Manholes and Inlets for Monolithic Pipe Sewers. Construct bases for manholes and inlets on monolithic pipe sewers either monolithically with the sewer or after the sewer is constructed.

D. Manholes for Box Sewers. Cast bases for manholes for box sewers as an integral part of the sewer. Construct manholes before backfilling, or cover the manhole opening temporarily and backfill the sewer as a whole.

E. Inverts. Shape and route floor inverts passing out or through the manhole or inlet as shown on the plans. Shape by adding and shaping mortar or concrete after the base is cast or by placing the required additional material with the base.

F. Finishing Complete Manholes and Inlets. Complete manholes and inlets in accordance with the plans. Backfill to original ground elevation in accordance with Item 400, "Excavation and Backfill for Structures."

G. **Finishing Stage I Construction.** Complete Stage I construction by constructing the walls to the elevations shown on the plans and backfilling to required elevations in accordance with Item 400, “Excavation and Backfill for Structures.”

H. **Stage II Construction.** Construct subgrade and base course or concrete pavement construction over Stage I manhole or inlet construction, unless otherwise approved by the Engineer. Excavate to expose the top of Stage I construction and complete the manhole or inlet in accordance with the plans and these Specifications, including backfill and cleaning of all debris from the bottom of the manhole or inlet.

I. **Inlet Units.** Install cast iron or steel inlet units in conjunction with the construction of concrete curb and gutter. Set the inlet units securely in position before placing concrete for curb and gutter. Form openings for the inlets and recesses in curb and gutter as shown on the plans. Place and thoroughly consolidate concrete for curb and gutter adjacent to inlets and around the inlet castings and formed openings and recesses without displacing the inlet units.

465.4. Measurement. All manholes and inlets satisfactorily completed in accordance with the plans and specifications will be measured by each manhole or inlet, complete, or by each manhole or inlet completed to the stage of construction required by the plans. Extension to inlets will be measured by each extension separately from the inlet.

465.5. Payment. The work performed and materials furnished in accordance with this Item and measured as provided under “Measurement” will be paid for as follows:

A. **Complete Manholes.** Payment for complete manholes will be made at the unit price bid for “Manhole (Complete)” of the type specified.

B. **Complete Inlets.** Payment for inlets will be made at the unit price bid for “Inlet (Complete),” of the type specified.

C. **Inlet Extensions.** Payment for inlet extensions will be made at the unit price bid for “Inlet Extension” of the type specified.

D. **Manholes Stage I.** Payment for Manholes, Stage I, will be made at the unit price bid for each “Manhole (Stage I)” of the type specified.

E. **Manholes Stage II.** Payment for Manholes, Stage II, will be made at the unit price bid for each “Manhole (Stage II)” of the type specified.

F. **Inlets Stage I.** Payment for Inlets, Stage I, will be made at the unit price bid for each “Inlet (Stage I)” of the type specified.

G. **Inlets Stage II.** Payment for Inlets, Stage II, will be made at the unit price bid for each “Inlet (Stage II)” of the type specified.

These price are full compensation for concrete, reinforcing steel, brick, mortar, aluminum and castings, frames, grates, rings and covers, excavation, and backfill and for all other materials, tools, equipment, labor, and incidentals.

5. **Type E Structure.** Provide building as shown on plans.

504.3. Measurement and Payment. The work performed, materials furnished, utilities and utility service (including phone when required), appurtenances (including computers, office equipment and Internet service), testing equipment, labor, tools, and incidentals will not be measured or paid for directly but will be subsidiary to pertinent Items.

ITEM 506

TEMPORARY EROSION, SEDIMENTATION, AND ENVIRONMENTAL CONTROLS

506.1. Description. Install, maintain, and remove erosion, sedimentation, and environmental control devices. Remove accumulated sediment and debris.

506.2. Materials.

A. Rock Filter Dams.

1. **Aggregate.** Furnish aggregate with hardness, durability, cleanliness, and resistance to crumbling, flaking, and eroding acceptable to the Engineer. Provide the following:
   - **Types 1, 2, and 4 Rock Filter Dams.** Use 3 to 6 in. aggregate.
   - **Type 3 Rock Filter Dams.** Use 4 to 8 in. aggregate.
2. **Wire.** Provide minimum 20 gauge galvanized wire for the steel wire mesh and tie wires for Types 2 and 3 rock filter dams. Type 4 dams require:
   - a double-twisted, hexagonal weave with a nominal mesh opening of 2-1/2 in. x 3-1/4 in.;
   - minimum 0.0866 in. steel wire for netting;
   - minimum 0.1063 in. steel wire for selvages and corners; and minimum 0.0866 in. for binding or tie wire.
3. **Sandbag Material.** Furnish sandbags meeting Section 506.2.I, "Sandbags," except that any gradation of aggregate may be used to fill the sandbags.

B. Temporary Pipe Slope Drains. Provide corrugated metal pipe, polyvinyl chloride (PVC) pipe, flexible tubing, watertight connection bands, grommet materials, prefabricated fittings, and flared entrance

sections that conform to the plans. Recycled and other materials meeting these requirements are allowed if approved.

Furnish concrete in accordance with Item 432, "Riprap."

C. Baled Hay. Provide hay bales weighing at least 50 lb., composed entirely of vegetable matter, measuring 30 in. or longer, and bound with wire, nylon, or polypropylene string.

D. Temporary Paved Flumes. Furnish asphalt concrete, hydraulic cement concrete, or other comparable non-erodible material that conforms to the plans. Provide rock or rubble with a minimum diameter of 6 in. and a maximum volume of 1/2 cu. ft. for the construction of energy dissipaters.

E. Construction Exits. Provide materials that meet the details shown on the plans and this Section.

1. **Rock Construction Exit.** Provide crushed aggregate for long and short-term construction exits. Furnish aggregates that are clean, hard, durable, and free from adherent coatings such as salt, alkali, dirt, clay, loam, shale, soft, or flaky materials and organic and injurious matter. Use 4- to 8-in. aggregate for Type 1 and 2- to 4-in. aggregate for Type 3.
2. **Timber Construction Exit.** Furnish No. 2 quality or better railroad ties and timbers for long-term construction exits, free of large and loose knots and treated to control rot. Fasten timbers with nuts and bolts or lag bolts, of at least 1/2 in. diameter, unless otherwise shown on the plans or allowed. For short-term exits, provide plywood or pressed wafer board at least 1/2 in. thick.
3. **Foundation Course.** Provide a foundation course consisting of flexible base, bituminous concrete, hydraulic cement concrete, or other materials as shown on the plans or directed.

F. Embankment for Erosion Control. Provide rock, loam, clay, topsoil, or other earth materials that will form a stable embankment to meet the intended use.

G. Pipe. Provide pipe outlet material in accordance with Item 556, "Pipe Underdrains," and details shown on the plans.

H. Construction Perimeter Fence.

1. **Posts.** Provide essentially straight wood or steel posts that are at least 60 in. long. Furnish soft wood posts with a minimum diameter of 3 in. or use 2 x 4 boards. Furnish hardwood posts with

a minimum cross-section of 1-1/2 x 1-1/5 in. Furnish T- or L-shaped steel posts with a minimum weight of 1.3 lb. per foot.

2. **Fence.** Provide orange construction fencing as approved by the Engineer.
3. **Fence Wire.** Provide 12-1/2 gauge or larger galvanized smooth or twisted wire. Provide16 gauge or larger tie wire.
4. **Flagging.** Provide brightly-colored flagging that is fade-resistant and at least 3/4 in. wide to provide maximum visibility both day and night.
5. **Staples.** Provide staples with a crown at least 1/2 in. wide and legs at least 1/2 in. long.
6. **Used Materials.** Previously used materials meeting the applicable requirements may be used if accepted by the Engineer.

I. **Sandbags.** Provide sandbag material of polypropylene, polyethylene, or polyamide woven fabric with a minimum unit weight of 4 oz. per square yard, a Mullen burst-strength exceeding 300 psi, and an ultraviolet stability exceeding 70%.

Use natural coarse sand or manufactured sand meeting the gradation given in Table 1 to fill sandbags. Filled sandbags must be 24 to 30 in. long, 16 to 18 in. wide, and 6 to 8 in. thick.

Table 1
Sand Gradation

Sieve #	Maximum Retained (% by Weight)
4	3%
100	80%
200	95%

J. **Temporary Sediment Control Fence.** Provide a net-reinforced fence using woven geo-textile fabric. Logos visible to the traveling public will not be allowed.

1. **Fabric.** Provide fabric materials in accordance with DMS-6230, “Temporary Sediment Control Fence Fabric.”
2. **Posts.** Provide essentially straight wood or steel posts with a minimum length of 48 in., unless otherwise shown on the plans. Soft wood posts must be at least 3 in. in diameter or nominal 2 x 4 in. Hardwood posts must have a minimum cross-section of 1-1/2 x 1-1/2 in. T- or L-shaped steel posts must have a minimum weight of 1.3 lb. per foot.

3. **Net Reinforcement.** Provide net reinforcement of at least 12-1/2 gauge galvanized welded wire mesh, with a maximum opening size of 2 x 4 in., at least 24 in. wide, unless otherwise shown on the plans.
4. **Staples.** Provide staples with a crown at least 3/4 in. wide and legs 1/2 in. long.
5. **Used Materials.** Use recycled material meeting the applicable requirements if accepted by the Engineer.

506.3. Equipment. Provide a backhoe, front end loader, blade, scraper, bulldozer, or other equipment as required when "Earthwork for Erosion Control" is specified on the plans as a bid item.

506.4. Construction.

A. **Contractor Responsibilities.** Implement the Department's Storm Water Pollution Prevention Plan (SWP3) for the project site in accordance with the specific or general storm water permit requirements. Develop and implement an SWP3 for project-specific material supply plants within and outside of the Department's right of way in accordance with the specific or general storm water permit requirements. Prevent water pollution from storm water associated with construction activity from entering any surface water or private property on or adjacent to the project site.

B. **General.**

1. **Phasing.** Implement control measures in the area to be disturbed before beginning construction, or as directed. Limit the disturbance to the area shown on the plans or as directed. If, in the opinion of the Engineer, the Contractor cannot control soil erosion and sedimentation resulting from construction operations, the Engineer will limit the disturbed area to that which the Contractor is able to control. Minimize disturbance to vegetation.
2. **Maintenance.** Immediately correct ineffective control measures. Implement additional controls as directed. Remove excavated material within the time requirements specified in the applicable storm water permit.
3. **Stabilization.** Stabilize disturbed areas where construction activities will be temporarily stopped in accordance with the applicable storm water permit. Establish a uniform vegetative cover. The project will not be accepted until a 70% density of existing adjacent undisturbed areas is obtained, unless otherwise

shown on the plans. When shown on the plans, the Engineer may accept the project when adequate controls are in place that will control erosion, sedimentation, and water pollution until sufficient vegetative cover can be established.

4. **Finished Work.** Upon acceptance of vegetative cover, remove and dispose of all temporary control measures, temporary embankments, bridges, matting, falsework, piling, debris, or other obstructions placed during construction that are not a part of the finished work, or as directed.

5. **Restricted Activities.** Do not locate disposal areas, stockpiles, or haul roads in any wetland, water body, or streambed.

   Do not install temporary construction crossings in or across any water body without the prior approval of the appropriate resource agency and the Engineer. Restrict construction operations in any water body to the necessary areas as shown on the plans or applicable permit, or as directed. Use temporary bridges, timber mats, or other structurally sound and non-eroding material for stream crossings.

   Provide protected storage area for paints, chemicals, solvents, and fertilizers at an approved location. Keep paints, chemicals, solvents, and fertilizers off bare ground and provide shelter for stored chemicals.

C. **Installation, Maintenance, and Removal Work.** Perform work in accordance with the specific or general storm water permit. Install and maintain the integrity of temporary erosion and sedimentation control devices to accumulate silt and debris until earthwork construction and permanent erosion control features are in place or the disturbed area has been adequately stabilized as determined by the Engineer. If a device ceases to function as intended, repair or replace the device or portions thereof as necessary. Remove sediment, debris, and litter. When approved, sediments may be disposed of within embankments, or in the right of way in areas where the material will not contribute to further siltation. Dispose of removed material in accordance with federal, state, and local regulations.

   Remove devices upon approval or when directed. Upon removal, finish-grade and dress the area. Stabilize disturbed areas in accordance with the permit, and as shown on the plans or directed. The Contractor retains ownership of stockpiled material and must remove it from the project when new installations or replacements are no longer required.

1. **Rock Filter Dams for Erosion Control.** Remove trees, brush, stumps, and other objectionable material that may interfere with the construction of rock filter dams. Place sandbags as a foundation when required or at the Contractor's option.

   For Types 1, 2, 3, and 5, place the aggregate to the lines, height, and slopes specified, without undue voids. For Types 2 and 3, place the aggregate on the mesh and then fold the mesh at the upstream side over the aggregate and secure it to itself on the downstream side with wire ties, or hog rings, or as directed. Place rock filter dams perpendicular to the flow of the stream or channel unless otherwise directed. Construct filter dams according to the following criteria, unless otherwise shown on the plans:

   a. **Type 1 (Non-reinforced).**

      (1) **Height.** At least 18 in. measured vertically from existing ground to top of filter dam.

      (2) **Top Width.** At least 2 ft.

      (3) **Slopes.** At most 2:1.

   b. **Type 2 (Reinforced).**

      (1) **Height.** At least 18 in. measured vertically from existing ground to top of filter dam.

      (2) **Top Width.** At least 2 ft.

      (3) **Slopes.** At most 2:1.

   c. **Type 3 (Reinforced).**

      (1) **Height.** At least 36 in. measured vertically from existing ground to top of filter dam.

      (2) **Top Width.** At least 2 ft.

      (3) **Slopes.** At most 2:1.

   d. **Type 4 (Sack Gabions).** Unfold sack gabions and smooth out kinks and bends. For vertical filling, connect the sides by lacing in a single loop–double loop pattern on 4- to 5-in. spacing. At one end, pull the end lacing rod until tight, wrap around the end, and twist 4 times. At the filling end, fill with stone, pull the rod tight, cut the wire with approximately 6 in. remaining, and twist wires 4 times.

      For horizontal filling, place sack flat in a filling trough, fill with stone, and connect sides and secure ends as described above.

Lift and place without damaging the gabion. Shape sack gabions to existing contours.

e. **Type 5.** Provide rock filter dams as shown on the plans.

2. **Temporary Pipe Slope Drains.** Install pipe with a slope as shown on the plans or as directed. Construct embankment for the drainage system in 8-in. lifts to the required elevations. Hand-tamp the soil around and under the entrance section to the top of the embankment as shown on the plans or as directed. Form the top of the embankment or earth dike over the pipe slope drain at least 1 ft. higher than the top of the inlet pipe at all points. Secure the pipe with hold-downs or hold-down grommets spaced a maximum of 10 ft. on center. Construct the energy dissipators or sediment traps as shown on the plans or as directed. Construct the sediment trap using concrete or rubble riprap in accordance with Item 432, "Riprap," when designated on the plans.

3. **Baled Hay for Erosion and Sedimentation Control.** Install hay bales at locations shown on the plans by embedding in the soil at least 4 in. and, where possible, approximately 1/2 the height of the bale, or as directed. Fill gaps between bales with hay.

4. **Temporary Paved Flumes.** Construct paved flumes as shown on the plans or as directed. Provide excavation and embankment (including compaction of the subgrade) of material to the dimensions shown on the plans, unless otherwise indicated. Install a rock or rubble riprap energy dissipater, constructed from the materials specified above to a minimum depth of 9 in. at the flume outlet to the limits shown on the plans or as directed.

5. **Construction Exits.** When tracking conditions exist, prevent traffic from crossing or exiting the construction site or moving directly onto a public roadway, alley, sidewalk, parking area, or other right of way areas other than at the location of construction exits. Construct exits for either long or short-term use.

   a. **Long-Term.** Place the exit over a foundation course, if necessary. Grade the foundation course or compacted subgrade to direct runoff from the construction exits to a sediment trap as shown on the plans or as directed. Construct exits with a width of at least 14 ft. for one-way and 20 ft. for two-way traffic for the full width of the exit, or as directed.

      (1) **Type 1.** Construct to a depth of at least 8 in. using crushed aggregate as shown on the plans or as directed.

(2) **Type 2.** Construct using railroad ties and timbers as shown on the plans or as directed.

b. **Short-Term.**

(1) **Type 3.** Construct using crushed aggregate, plywood, or wafer board. This type of exit may be used for daily operations where long-term exits are not practical.

(2) **Type 4.** Construct as shown on the plans or as directed.

6. **Earthwork for Erosion Control.** Perform excavation and embankment operations to minimize erosion and to remove collected sediments from other erosion control devices.

a. **Excavation and Embankment for Erosion Control Features.** Place earth dikes, swales, or combinations of both along the low crown of daily lift placement, or as directed, to prevent runoff spillover. Place swales and dikes at other locations as shown on the plans or as directed to prevent runoff spillover or to divert runoff. Construct cuts with the low end blocked with undisturbed earth to prevent erosion of hillsides. Construct sediment traps at drainage structures in conjunction with other erosion control measures as shown on the plans or as directed.

Where required, create a sediment basin providing 3,600 cu. ft. of storage per acre drained, or equivalent control measures for drainage locations that serve an area with 10 or more disturbed acres at one time, not including offsite areas.

b. **Excavation of Sediment and Debris.** Remove sediment and debris when accumulation affects the performance of the devices, after a rain, and when directed.

7. **Construction Perimeter Fence.** Construct, align, and locate fencing as shown on the plans or as directed.

a. **Installation of Posts.** Embed posts 18 in. deep or adequately anchor in rock, with a spacing of 8 to 10 ft.

b. **Wire Attachment.** Attach the top wire to the posts at least 3 ft. from the ground. Attach the lower wire midway between the ground and the top wire.

c. **Flag Attachment.** Attach flagging to both wire strands midway between each post. Use flagging at least 18 in. long. Tie flagging to the wire using a square knot.

8. **Sandbags for Erosion Control.** Construct a berm or dam of sandbags that will intercept sediment-laden storm water runoff from disturbed areas, create a retention pond, detain sediment, and release water in sheet flow. Fill each bag with sand so that at least the top 6 in. of the bag is unfilled to allow for proper tying of the open end. Place the sandbags with their tied ends in the same direction. Offset subsequent rows of sandbags 1/2 the length of the preceding row. Place a single layer of sandbags downstream as a secondary debris trap. Place additional sandbags as necessary or as directed for supplementary support to berms or dams of sandbags or earth.
9. **Temporary Sediment-Control Fence.** Provide temporary sediment-control fence near the downstream perimeter of a disturbed area to intercept sediment from sheet flow. Incorporate the fence into erosion-control measures used to control sediment in areas of higher flow. Install the fence as shown on the plans, as specified in this Section, or as directed.
   a. **Installation of Posts.** Embed posts at least 18 in. deep, or adequately anchor, if in rock, with a spacing of 6 to 8 ft. and install on a slight angle toward the run-off source.
   b. **Fabric Anchoring.** Dig trenches along the uphill side of the fence to anchor 6 to 8 in. of fabric. Provide a minimum trench cross-section of 6 x 6 in. Place the fabric against the side of the trench and align approximately 2 in of fabric along the bottom in the upstream direction. Backfill the trench, then hand-tamp.
   c. **Fabric and Net Reinforcement Attachment.** Unless otherwise shown under the plans, attach the reinforcement to wooden posts with staples, or to steel posts with T-clips, in at least 4 places equally spaced. Sewn vertical pockets may be used to attached reinforcement to end posts. Fasten the fabric to the top strand of reinforcement by hog rings or cord every 15 in. or less.
   d. **Fabric and Net Splices.** Locate splices at a fence post with a minimum lap of 6 in. attached in at least 6 places equally spaced, unless otherwise shown under the plans. Do not locate splices in concentrated flow areas.

   Requirements for installation of used temporary sediment-control fence include the following:

- fabric with minimal or no visible signs of biodegradation (weak fibers),
- fabric without excessive patching (more than 1 patch every 15 to 20 ft.),
- posts without bends, and
- backing without holes.

506.5. Measurement.

A. Rock Filter Dams. Installation or removal of rock filter dams will be measured by the foot or by the cubic yard. The measured volume will include sandbags, when used.

1. **Linear Measurement.** When rock filter dams are measured by the foot, measurement will be along the centerline of the top of the dam.
2. **Volume Measurement.** When rock filter dams are measured by the cubic yard, measurement will be based on the volume of rock computed by the method of average end areas.
   a. **Installation.** Measurement will be made in final position.
   b. **Removal.** Measurement will be made at the point of removal.

B. Temporary Pipe Slope Drains. Temporary pipe slope drains will be measured by the foot.

C. Baled Hay. Baled hay will be measured by each bale.

D. Temporary Paved Flumes. Temporary paved flumes will be measured by the square yard of surface area. The measured area will include the energy dissipater at the flume outlet.

E. Construction Exits. Construction exits will be measured by the square yard of surface area.

F. Earthwork for Erosion Control.

1. **Equipment.** Equipment use will be measured by the actual number of hours the equipment is operated.
2. **Volume Measurement.**
   a. **In Place.**
      (1) **Excavation.** Excavation will be measured by the cubic yard in its original position and the volume computed by the method of average end areas.
      (2) **Embankment.** Embankment will be measured by the cubic yard in its final position by the method of average

end areas. The volume of embankment will be determined between:

- the original ground surfaces or the surface upon that the embankment is to be constructed for the feature and
- the lines, grades and slopes of the accepted embankment for the feature.

b. In Vehicles. Excavation and embankment quantities will be combined and paid for under "Earthwork (Erosion and Sediment Control, In Vehicles)." Excavation will be measured by the cubic yard in vehicles at the point of removal. Embankment will be measured by the cubic yard in vehicles measured at the point of delivery. Shrinkage or swelling factors will not be considered in determining the calculated quantities.

G. Construction Perimeter Fence. Construction perimeter fence will be measured by the foot.

H. Sandbags for Erosion Control. Sandbags will be measured as each sandbag or by the foot along the top of sandbag berms or dams.

I. Temporary Sediment-Control Fence. Temporary sediment-control fence will be measured by the foot.

506.6. Payment. The following will not be paid for directly but are subsidiary to pertinent Items:

- erosion-control measures for Contractor project-specific locations (PSLs) inside and outside the right of way (such as construction and haul roads, field offices, equipment and supply areas, plants, and material sources);
- removal of litter;
- repair to devices and features damaged by Contractor operations;
- added measures and maintenance needed due to negligence, carelessness, lack of maintenance, and failure to install permanent controls;
- removal and reinstallation of devices and features needed for the convenience of the Contractor;
- finish grading and dressing upon removal of the device; and
- minor adjustments including but not limited to plumbing posts, reattaching fabric, minor grading to maintain slopes on an erosion embankment feature, or moving small numbers of sandbags.

The Contractor will be reimbursed in accordance with pertinent Items or Article 9.5, "Force Account," for maintenance, repair, or reinstallation of devices and features when the need for additional control measures cannot be attributed to the above, as determined by the Engineer. Stabilization of disturbed areas will be paid for under pertinent Items.

Furnishing and installing pipe for outfalls associated with sediment traps and ponds will not be paid for directly but is subsidiary to the excavation and embankment under this Item.

A. Rock Filter Dams. The work performed and materials furnished in accordance with this Item and measured as provided under "Measurement" will be paid for at the unit price bid as follows:

1. **Installation.** Installation will be paid for as "Rock Filter Dams (Install)" of the type specified. This price is full compensation for furnishing and operating equipment, finish backfill and grading, lacing, proper disposal, labor, materials, tools, and incidentals.
2. **Removal.** Removal will be paid for as "Rock Filter Dams (Remove)." This price is full compensation for furnishing and operating equipment, proper disposal, labor, materials, tools, and incidentals.

When the Engineer directs that the rock filter dam installation or portions thereof be replaced, payment will be made at the unit price bid for "Rock Filter Dams (Remove)" and for "Rock Filter Dams (Install)" of the type specified. This price is full compensation for furnishing and operating equipment, finish backfill and grading, lacing, proper disposal, labor, materials, tools, and incidentals

B. Temporary Pipe Slope Drains. The work performed and materials furnished in accordance with this Item and measured as provided under "Measurement" will be paid for at the unit price bid for "Temporary Pipe Slope Drains" of the size specified. This price is full compensation for furnishing materials, removal and disposal, furnishing and operating equipment, labor, tools, and incidentals.

Removal of temporary pipe slope drains will not be paid for directly but is subsidiary to the installation Item. When the Engineer directs that the pipe slope drain installation or portions thereof be replaced, payment will be made at the unit price bid for "Temporary Pipe Slope Drains" of the size specified, which is full compensation for the removal and reinstallation of the pipe drain.

Earthwork required for the pipe slope drain installation, including construction of the sediment trap, will be measured and paid for under Section 506.5.F, "Earthwork for Erosion and Sediment Control."

Riprap concrete or stone, when used as an energy dissipater or as a stabilized sediment trap, will be measured and paid for in accordance with Item 432, "Riprap."

C. Baled Hay. The work performed and materials furnished in accordance with this Item and measured as provided under "Measurement" will be paid for at the unit price bid for "Baled Hay." This price is full compensation for furnishing and placing bales, excavating trenches, removal and disposal, equipment, labor, tools, and incidentals.

When the Engineer directs that the baled hay installation (or portions thereof) be replaced, payment will be made at the unit price bid for "Baled Hay," which is full compensation for removal and reinstallation of the baled hay.

D. Temporary Paved Flumes. The work performed and materials furnished in accordance with this Item and measured as provided under "Measurement" will be paid for at the unit price bid for "Temporary Paved Flume (Install)" or "Temporary Paved Flume (Remove)." This price is full compensation for furnishing and placing materials, removal and disposal, equipment, labor, tools, and incidentals.

When the Engineer directs that the paved flume installation or portions thereof be replaced, payment will be made at the unit prices bid for "Temporary Paved Flume (Remove)" and "Temporary Paved Flume (Install)." These prices are full compensation for the removal and replacement of the paved flume and for equipment, labor, tools, and incidentals.

Earthwork required for the paved flume installation, including construction of a sediment trap, will be measured and paid for under Section 506.5.F, "Earthwork for Erosion and Sediment Control."

E. Construction Exits. Contractor-required construction exits from off-right of way locations or on-right of way PSLs will not be paid for directly but are subsidiary to pertinent Items.

The work performed and materials furnished in accordance with this Item and measured as provided under "Measurement" for construction exits needed on right of way access to work areas required by the Department will be paid for at the unit price bid for "Construction Exits (Install)" of the type specified or "Construction Exits (Remove)." This price is full compensation for furnishing and placing materials,

excavating, removal and disposal, cleaning vehicles, labor, tools, and incidentals.

When the Engineer directs that a construction exit or portion thereof be removed and replaced, payment will be made at the unit prices bid for "Construction Exit (Remove)" and "Construction Exit (Install)" of the type specified. These prices are full compensation for the removal and replacement of the construction exit and for equipment, labor, tools, and incidentals.

Construction of sediment traps used in conjunction with the construction exit will be measured and paid for under Section 506.5.F, "Earthwork for Erosion and Sediment Control."

F. Earthwork for Erosion and Sediment Control. The work performed and materials furnished in accordance with this Item and measured as provided under "Measurement" will be paid for at the unit price bid for "Excavation (Erosion and Sediment Control, In Place)," "Embankment (Erosion and Sediment Control, In Place)," "Earthwork (Erosion and Sediment Control, In Vehicles)," "Dragline Work (Erosion and Sediment Control)," "Backhoe Work (Erosion and Sediment Control)," "Excavator Work (Erosion and Sediment Control)," "Front End Loader Work (Erosion and Sediment Control)," "Blading Work (Erosion and Sediment Control)," "Scraper Work (Erosion and Sediment Control)," or "Bulldozer Work (Erosion and Sediment Control)."

This price is full compensation for excavation including removal of accumulated sediment in various erosion control installations as directed, hauling, and disposal of material not used elsewhere on the project; excavation for construction of erosion-control features; embankments including furnishing material from approved sources and construction of erosion-control features; sandbags; plywood; stage construction for curb inlets involved in curb-inlet sediment traps; and equipment, labor; tools, and incidentals.

Earthwork needed to remove and obliterate of erosion-control features will not be paid for directly but is subsidiary to pertinent Items unless otherwise shown on the plans.

Sprinkling and rolling required by this Item will not be paid for directly, but will be subsidiary to this Item.

G. Construction Perimeter Fence. The work performed and materials furnished in accordance with this Item and measured as provided under "Measurement" will be paid for at the unit price bid for "Construction Perimeter Fence." This price is full compensation for furnishing and

ITEM 530
INTERSECTIONS, DRIVEWAYS, AND TURNOUTS

530.1. Description. Construct and pave intersections, driveways, and turnouts. Pave existing intersections, driveways, and turnouts.

Intersections are considered to be areas off the travel lanes and shoulders of the Contract highway on the intersecting highway on the state system. The intersecting on-system highway work will be paid for under this Item only when shown on the plans.

Driveways are defined as private (residential or commercial) and public (county road and city street) access areas off the travel lanes and shoulders.

Turnouts include but are not limited to mailbox and litter barrel widenings.

530.2. Materials. Furnish materials that meet the following:

- Item 247, "Flexible Base"
- Item 260, "Lime Treatment (Road Mixed)"
- Item 263, "Lime Treatment (Plant Mixed)"
- Item 275, "Cement Treatment (Road Mixed)"
- Item 276, "Cement Treatment (Plant Mixed)"
- Item 292, "Asphalt Treatment (Plant Mix)"
- Item 316, "Surface Treatments"
- Item 330, "Limestone Rock Asphalt Pavement"
- Item 334, "Hot Mix–Cold Laid Asphalt Concrete Pavement"
- Item 340, "Dense-Graded Hot Mix Asphalt Concrete Pavement (Method)"
- Item 360, "Concrete Pavement"
- Item 421, "Hydraulic Cement Concrete"
- Item 440, "Reinforcing Steel."

530.3. Construction. Construct and pave intersections, driveways, and turnouts, and pave existing intersections, driveways, and turnouts as shown on the plans or as directed. Place materials in accordance with construction Articles of pertinent Items. Provide uninterrupted access to adjacent property unless otherwise directed. Ensure that abrupt elevation changes in driveway or turnout areas that serve as sidewalks do not exceed 1/4 in. and that the sidewalk area cross slope does not exceed 2%. Ready-mix concrete and hand finishing will be permitted when concrete pavement is specified unless otherwise shown in the plans for intersections.

530.4. Measurement. This Item will be measured by each intersection, driveway, or turnout, or by the square yard of the final pavement surface.

When “Intersections, Driveways, and Turnouts” or “Driveways and Turnouts” are bid, measurement will be restricted to the square yard.

530.5. Payment. The work performed and materials furnished in accordance with this Item and measured as provided under “Measurement” will be paid for at the unit price bid for “Intersections,” “Driveways,” “Turnouts,” “Intersections, Driveways, and Turnouts,” or “Driveways and Turnouts” of the surface specified (Concrete, Asphaltic Concrete Pavement, or Surface Treatment).

This price is full compensation for furnishing and operating equipment; excavation and embankment; base and pavement materials; and labor, materials, tools, and incidentals. Drainage structures will be measured and paid for in accordance with the pertinent bid Items. Bonus and penalties for quality control and quality assurance (QC/QA) materials will not apply when payment for those materials is made under this Item.

ITEM 531
SIDEWALKS

531.1. Description. Construct hydraulic cement concrete sidewalks.

531.2. Materials. Furnish materials conforming to the following:

- Item 360, “Concrete Pavement”
- Item 420, “Concrete Structures”
- Item 421, “Hydraulic Cement Concrete”
- Item 440, “Reinforcing Steel.”

Use Class A concrete or other concrete as specified. Use Grade 8 course aggregate for extruded Class A concrete. Use other grades if approved by the Engineer.

531.3. Construction. Shape and compact subgrade, foundation, or pavement surface to the line, grade, and cross-section shown on the plans. Lightly sprinkle subgrade or foundation material immediately before concrete placement. Hand-tamp and sprinkle foundation when placement is directly on subgrade or foundation materials. Remove and dispose of existing concrete in accordance with Item 104, “Removing Concrete.” Provide a clean surface for concrete placement directly on the surface material or pavement.

Mix and place concrete in accordance with the pertinent Items. Hand-finishing is allowed for any method of construction. Finish exposed surfaces

ITEM F-162 CHAIN-LINK FENCE

DESCRIPTION

162-1.1 This item shall consist of furnishing and erecting a chain-link fence in accordance with these specifications and the details shown on the plans and in conformity with the lines and grades shown on the plans or established by the Engineer.

MATERIALS

162-2.1 **FABRIC**. The fabric shall be woven with a 9-gauge [galvanized steel wire] wire in a 2 in (50 mm) mesh and shall meet the requirements of [ASTM A 121].

162-2.2 BARBED WIRE. Barbed wire shall be 2-strand 12-1/2 gauge **[zinc-coated]** wire with 4-point barbs and shall conform to the requirements of **[** ASTM A 121, CLASS 3, CHAIN LINK FENCE GRADE **].**

162-2.3 POSTS, RAILS AND BRACES. Line posts, rails, and braces shall conform to the requirements of ASTM F-1043 or ASTM F 1083 as follows.

Galvanized tubular steel pipe shall conform to the requirements of Group IA, (Schedule 40) coatings conforming to Type A, or Group IC (High Strength Pipe), External coating Type B, and internal coating Type B or D.

Roll Formed Steel Shapes (C-Sections) shall conform to the requirements of Group IIA, and be galvanized in accordance with the requirements of ASTM F 1043, Type A.

Hot-Rolled Shapes (H Beams) shall meet the requirements of Group III, and be galvanized in accordance with the requirements of ASTM F 1043, Type A.

Aluminum Pipe shall conform to the requirements of Group IB.

Aluminum Shapes shall conform to the requirements of Group IIB.

Vinyl or polyester coated steel shall conform to the requirements of ASTM F 1043, Paragraph 7.3 Optional Supplemental Color Coating.

Composite posts shall conform to the strength requirements of ASTM F 1043 or ASTM F 1083. The strength loss of composite posts shall not exceed 10 percent when subjected to 3,600 hours of exposure to light and water in accordance with ASTM G 23, ASTM G 26, and ASTM G-53.

Posts, rails, and braces furnished for use in conjunction with aluminum alloy fabric shall be aluminum alloy or composite.

Posts, rails, and braces, with the exception of galvanized steel conforming to F 1043 or ASTM F 1083, Group 1A, Type A, or aluminum alloy, shall demonstrate the ability to withstand testing in salt spray in accordance with ASTM B 117 as follows:

External: 1,000 hours with a maximum of 5% red rust.
Internal: 650 hours with a maximum of 5% red rust.

The dimensions of the posts, rails, and braces shall be in accordance with Tables I through VI of Fed. Spec. RR-F-191/3.

162-2.4 GATES. Gate frames shall consist of **[galvanized steel pipe]** and shall conform to the specifications for the same material under paragraph 162-2.3. The fabric shall be of the same type material as used in the fence.

162-2.5 WIRE TIES AND TENSION WIRES. Wire ties for use in conjunction with a given type of fabric shall be of the same material and coating weight identified with the fabric type. Tension wire shall be 7-gauge marcelled steel wire with the same coating as the fabric type and shall conform to ASTM A 824.

All material shall conform to Fed. Spec. RR-F-191/4.

162-6 MISCELLANEOUS FITTINGS AND HARDWARE. Miscellaneous steel fittings and hardware for use with **[zinc-coated]** steel fabric shall be of commercial grade steel or better quality, wrought or cast as appropriate to the article, and sufficient in strength to provide a balanced design when used in conjunction with fabric posts, and wires of the quality specified herein. **[All steel fittings and hardware shall be protected with a zinc coating applied in conformance with ASTM A 153.]** Barbed wire support arms shall withstand a load of 250 pounds (113 kg) applied vertically to the outermost end of the arm.

162-2.7 CONCRETE. Concrete shall be of a commercial grade with a minimum 28-day compressive strength of 2500 psi (17 240 kPa) meeting the requirements of P-610 Structural Portland Cement Concrete.

162-2.8 MARKING. Each roll of fabric shall carry a tag showing the kind of base metal (steel, aluminum, or aluminum alloy number), kind of coating, the gauge of the wire, the length of fencing in the roll, and the name of the manufacturer. Posts, wire, and other fittings shall be identified as to manufacturer, kind of base metal (steel, aluminum, or aluminum alloy number), and kind of coating.

162-2.9 POST CAPS. All posts shall have post caps installed on top to prevent moisture from entering through the top of the post. The post caps shall meet the requirements of paragraph 162-2.6 and shall be of the size such that when the post cap is installed over the top of the fence top, it will fit securely and not be loose. The post caps shall have at least the industry standard side depth.

CONSTRUCTION METHODS

162-3.1 CLEARING FENCE LINE. All trees, brush, stumps, logs, and other debris which would interfere with the proper construction of the fence in the required location shall be removed a minimum width of 2 ft (61 cm) on each side of the fence centerline before starting fencing operations. The cost of removing and disposing of the material shall not constitute a pay item and shall be considered incidental to fence construction.

162-3.2 INSTALLING POSTS. All posts shall be set in concrete at the required dimension and depth and at the spacing shown on the plans.

The concrete shall be thoroughly compacted around the posts by tamping or vibrating and shall have a smooth finish slightly higher than the ground and sloped to drain away from the posts. All posts shall be set plumb and to the required grade and alignment. No materials shall be installed on the posts, nor shall the posts be disturbed in any manner within 7 days after the individual post footing is completed.

Should rock be encountered at a depth less than the planned footing depth, a hole 2 in (50 mm) larger than the greatest dimension of the posts shall be drilled to a depth of 12 in (300 mm). After the posts are

set, the remainder of the drilled hole shall be filled with grout, composed of one part Portland cement and two parts mortar sand. Any remaining space above the rock shall be filled with concrete in the manner described above.

In lieu of drilling, the rock may be excavated to the required footing depth. No extra compensation shall be made for rock excavation.

162-3.3 INSTALLING TOP RAILS. The top rail shall be continuous and shall pass through the post tops. The coupling used to join the top rail lengths shall allow for expansion.

162-3.4 INSTALLING BRACES. Horizontal brace rails, with diagonal truss rods and turnbuckles, shall be installed at all terminal posts.

162-3.5 INSTALLING FABRIC. The wire fabric shall be firmly attached to the posts and braced in the manner shown on the plans. All wire shall be stretched taut and shall be installed to the required elevations. The fence shall generally follow the contour of the ground, with the bottom of the fence fabric no less than 1 in (25 mm) or more than 4 in (100 mm) from the ground surface. Grading shall be performed where necessary to provide a neat appearance.

At locations of small natural swales or drainage ditches and where it is not practical to have the fence conform to the general contour of the ground surface, longer posts may be used and multiple strands of barbed wire stretched thereon to span the opening below the fence. The vertical clearance between strands of barbed wire shall be 6 in (150 mm) or less.

162-3.6 ELECTRICAL GROUNDS. The ground shall be accomplished with a copper clad rod 8 ft (240 cm) long and a minimum of 5/8 in (15 mm) in diameter driven vertically until the top is 6 in (150 mm) below the ground surface. A No. 6 solid copper conductor shall be clamped to the rod and to the fence in such a manner that each element of the fence is grounded. Installation of ground rods shall not constitute a pay item and shall be considered incidental to fence construction.

METHOD OF MEASUREMENT

162-4.1 Chain-link fence will be measured for payment by the linear foot (meter). Measurement will be along the top of the fence from center to center of end posts, excluding the length occupied by gate openings.

Gates will be measured as complete units.

BASIS OF PAYMENT

162-5.1 Payment for chain-link fence will be made at the contract unit price per linear foot (meter).

Payment for driveway or walkway gates will be made at the contract unit price for each gate.

The price shall be full compensation for furnishing all materials, and for all preparation, erection, and installation of these materials, and for all labor equipment, tools, and incidentals necessary to complete the item.

Payment will be made under:

Item F-162-5.1 Remove Fence -- Per Linear Foot (meter)

~~Item F-162-5.2 Remove Gates -- Per Each~~

~~Item F-162-5.3 6' Chain Link Fence w/ 3 Strands Barbed Wire -- Per Linear Foot~~

~~Item F-162-5.4 Temporary Fence 6' Chain Link Fence, No Concrete Pull Posts, No Top Rail or Barbed Wire -- Per Linear Foot~~

~~Item F-162-5.5 Reinforced Fence Section -- Per Each~~

MATERIAL REQUIREMENTS

ASTM A 121	Zinc-Coated (Galvanized) Steel Barbed Wire
ASTM A 123	Zinc (Hot-Dip Galvanized) Coatings on Iron and Steel Products
ASTM A 153	Zinc Coating (Hot-Dip) on Iron and Steel Hardware
ASTM A 392	Zinc-Coated Steel Chain-Link Fence Fabric
ASTM A 491	Aluminum-Coated Steel Chain-Link Fence Fabric
ASTM A 572	High-Strength Low-Alloy Columbium-Vanadium Steels of Structural Steel Quality
ASTM A 653	Specification for Steel Sheet, Zinc-Coated (Galvanized) or Zinc-Iron Alloy-Coated (Galvannealed) by the Hot-Dip Process
ASTM A 824	Metallic-Coated Steel Marcelled Tension Wire for Use With Chain Link Fence
ASTM A 1011	Steel Sheet and Strip, Hot-Rolled, Carbon, Structural, High-Strength Low-Alloy and High-Strength Low-Alloy with Improved Formability
ASTM B 117	Standard Practice for Operating Salt Spray (Fog) Apparatus
ASTM B 221	Aluminum and Aluminum-Alloy Extruded Bars, Rods, Wire Shapes and Tubes
ASTM B 429	Aluminum-Alloy Extruded Structural Pipe and Tube
ASTM F 668	Poly(vinyl Chloride)(PVC) and other Organic Polymer-Coated Steel Chain-Link Fence Fabric
ASTM F 1043	Strength and Protective Coatings on Metal Industrial Chain Link Fence Framework
ASTM F 1083	Pipe, Steel, Hot-Dipped Zinc-Coated (Galvanized) Welded, for Fence Structures
ASTM F 1183	Aluminum Alloy Chain Link Fence Fabric
ASTM F 1345	Zinc-5% Aluminum-Mischmetal Alloy-Coated Steel Chain Link Fence Fabric
ASTM G 152	Operating Open Flame (Carbon-Arc) Light Apparatus for Exposure of

	Nonmetallic Materials
ASTM G 153	Operating Enclosed Carbon-Arc Light Apparatus for Exposure of Nonmetallic Materials
ASTM G 154	Operating Fluorescent Light Apparatus for UV Exposure of Nonmetallic Materials
ASTM G 155	Operating (Xenon-Arc) Light Apparatus for Exposure of Nonmetallic Materials
FED SPEC RR-F-191/3	Fencing, Wire and Post, Metal (Chain-Link Fence Posts, Top Rails and Braces)
FED SPEC RR-F-191/4	Fencing, Wire and Post, Metal (Chain-Link Fence Accessories)

END OF ITEM F-162

ITEM T-901 SEEDING

DESCRIPTION

901-1.1 This item shall consist of soil preparation, seeding **[ ]** the areas shown on the plans or as directed by the Engineer in accordance with these specifications.

MATERIALS

901-2.1 SEED The species and application rates of grass, legume, and cover-crop seed furnished shall be those stipulated herein. Seed shall conform to the requirements of Fed. Spec. JJJ-S-181. Fertilizing, seeding and/or mulching operations will not be permitted when wind velocities are in excess of 15 miles per hour. All seed shall meet the requirements of the (State) Department of Agriculture and Consumer Services and all applicable state laws.

Seed shall be furnished separately or in mixtures in standard containers with the seed name, lot number, net weight, percentages of purity and of germination and hard seed, and percentage of maximum weed seed content clearly marked for each kind of seed. The Contractor shall furnish the Engineer duplicate signed copies of a statement by the vendor certifying that each lot of seed has been tested by a recognized laboratory for seed testing within 6 months of date of delivery. This statement shall include: name and address of laboratory, date of test, lot number for each kind of seed, and the results of tests as to name, percentages of purity and of germination, and percentage of weed content for each kind of seed furnished, and, in case of a mixture, the proportions of each kind of seed.

Seeds shall be applied as follows:

Seed Purity	Minimum Seed Purity (Percent)	Minimum Germination (Percent)	Rate of Application lb./1,000 S.F.
33% Buffalo Grass (Bouteloua dactyloides)	95%	85%	3 - 5 Lbs
33% Curly Mesquite (Hilaria)	95%	85%	3 - 5 Lbs
33% Eastern Gramagrass (Tripsicum dactiloides)	95%	85%	3 - 5 Lbs
100% Perennial ryegrass (Lolium perenne)	95%	85%	10 - 12 Lbs

The germination rate shall not include the hard seed percentage.

Millet seed is expressly prohibited from being applied anywhere on the project. Should the Contractor apply Millet knowingly or unknowingly to the project, an initial fine of $1,000.00 will be levied. An additional $1,000.00 per day fine shall be levied on the Contractor for each day the Millet seed is not removed from the project. The fines levied shall be recorded daily and shall be deducted from the Contractor's earnings at the end of the project. The Contractor shall submit a certification of the seed provided for this project stating no millet is present in the seed.

Seed must be watered at a rate of 1/4"+ per day for 14 continuous days after placement.

901-2.2 LIME. Lime shall be ground limestone containing not less than 85% of total carbonates, and shall be ground to such fineness that 90% will pass through a No. 20 mesh sieve and 50% will pass through a No. 100 mesh sieve. Coarser material will be acceptable, providing the rates of application are increased

to provide not less than the minimum quantities and depth specified in the special provisions on the basis of the two sieve requirements above. Dolomitic lime or a high magnesium lime shall contain at least 10% of magnesium oxide. Lime shall be applied at the rate of **[ ]**. All liming materials shall conform to the requirements of ASTM C 602.

901-2.3 FERTILIZER. Fertilizer shall be standard commercial fertilizers supplied separately or in mixtures containing the percentages of total nitrogen, available phosphoric acid, and water-soluble potash. They shall be applied at the rate and to the depth specified herein, and shall meet the requirements of Fed. Spec. A-A-1909 and applicable state laws. They shall be furnished in standard containers with name, weight, and guaranteed analysis of contents clearly marked thereon. No cyanamide compounds or hydrated lime shall be permitted in mixed fertilizers.

The fertilizers may be supplied in one of the following forms:

a. A dry, free-flowing fertilizer suitable for application by a common fertilizer spreader;

b. A finely-ground fertilizer soluble in water, suitable for application by power sprayers; or

c. A granular or pellet form suitable for application by blower equipment.

Fertilizers shall be **[10-10-10 (n-p-k)]** commercial fertilizer and shall be spread at the rate of **[400]**.

901-2.4 SOIL FOR REPAIRS. The soil for fill and topsoiling of areas to be repaired shall be at least of equal quality to that which exists in areas adjacent to the area to be repaired. The soil shall be relatively free from large stones, roots, stumps, or other materials that will interfere with subsequent sowing of seed, compacting, and establishing turf, and shall be approved by the Engineer before being placed.

901-2.5 SUBMITTALS AND CERTIFICATES. Shop drawings of each seeding related component shall be submitted to the Engineer for review and approval and shall be approved prior to ordering any materials associated with this item. The submittals shall include the following:

a. Catalogue data and certification showing that the seed mixture percent by weight, percent purity, percent germination and date of manufacture meet the requirements specified.

b. Catalogue data and certification showing that the guaranteed analysis of the fertilizer meets the requirements specified.

The data shall be sufficient, in the opinion of the Engineer, to determine compliance with the contract documents. The Contractor shall submit the submittals to the Engineer 30 days prior to start up of construction.

901-2.6 INSPECTION OF SEED. Prior to startup of any seeding operations, the Engineer shall inspect all bags containing seed to ensure the proper seed specified is being utilized and that no unauthorized seed will be incorporated into the work.

CONSTRUCTION METHODS

901-3.1 ADVANCE PREPARATION AND CLEANUP. After grading of areas has been completed and before applying fertilizer and ground limestone, areas to be seeded shall be raked or otherwise cleared of stones larger than 2 in (50 mm) in any diameter, sticks, stumps, and other debris that might interfere with sowing of seed, growth of grasses, or subsequent maintenance of grass-covered areas. If any damage by erosion or other causes has occurred after the completion of grading and before beginning the application of fertilizer and ground limestone, the Contractor shall repair such damage. This may include filling gullies, smoothing irregularities, and repairing other incidental damage.

An area to be seeded shall be considered a satisfactory seedbed without additional treatment if it has recently been thoroughly loosened and worked to a depth of not less than 5 in (125 mm) as a result of grading operations and, if immediately prior to seeding, the top 3 in (75 mm) of soil is loose, friable, reasonably free from large clods, rocks, large roots, or other undesirable matter, and if shaped to the required grade.

However, when the area to be seeded is sparsely sodded, weedy, barren and unworked, or packed and hard, any grass and weeds shall first be cut or otherwise satisfactorily disposed of, and the soil then scarified or otherwise loosened to a depth not less than 5 in (125 mm). Clods shall be broken and the top 3 in (75 mm) of soil shall be worked into a satisfactory seedbed by discing, or by use of cultipackers, rollers, drags, harrows, or other appropriate means.

901-3.2 DRY APPLICATION METHOD.

a. Liming. Lime shall be applied separately and prior to the application of any fertilizer or seed and only on seedbeds that have previously been prepared as described above. The lime shall then be worked into the top 3 in (75 mm) of soil after which the seedbed shall again be properly graded and dressed to a smooth finish.

b. Fertilizing. Following advance preparations and cleanup fertilizer shall be uniformly spread at the rate that will provide not less than the minimum quantity stated in paragraph 901-2.3.

c. Seeding. Grass seed shall be sown at the rate specified in paragraph 901-2.1 immediately after fertilizing, and the fertilizer and seed shall be raked within the depth range stated in the special provisions. Seeds of legumes, either alone or in mixtures, shall be inoculated before mixing or sowing, in accordance with the instructions of the manufacturer of the inoculant. When seeding is required at other than the seasons shown on the plans or in the special provisions, a cover crop shall be sown by the same methods required for grass and legume seeding.

d. Rolling. After the seed has been properly covered, the seedbed shall be immediately compacted by means of an approved lawn roller, weighing 40 to 65 pounds per foot (60 to 97 kg per meter) of width for clay soil (or any soil having a tendency to pack), and weighing 150 to 200 pounds per foot (223 to 298 kg per meter) of width for sandy or light soils.

The Contractor shall utilize the dry application method <u>only</u> when expressly authorized by the Engineer and <u>only</u> on a limited basis when authorized by the Engineer.

901-3.3 WET APPLICATION METHOD.

a. General. The Contractor may elect to apply seed and fertilizer (and lime, if required) by spraying them on the previously prepared seedbed in the form of an aqueous mixture and by using the methods and equipment described herein. The rates of application shall be as specified in the special provisions.

b. Spraying Equipment. The spraying equipment shall have a container or water tank equipped with a liquid level gauge calibrated to read in increments not larger than 50 gallons (190 liters) over the entire range of the tank capacity, mounted so as to be visible to the nozzle operator. The container or tank shall also be equipped with a mechanical power-driven agitator capable of keeping all the solids in the mixture in complete suspension at all times until used.

The unit shall also be equipped with a pressure pump capable of delivering 100 gallons (380 liters) per minute at a pressure of 100 lb / sq in (690 kPa). The pump shall be mounted in a line that will recirculate the mixture through the tank whenever it is not being sprayed from the nozzle. All pump passages and

pipe lines shall be capable of providing clearance for 5/8 in (15 mm) solids. The power unit for the pump and agitator shall have controls mounted so as to be accessible to the nozzle operator. There shall be an indicating pressure gauge connected and mounted immediately at the back of the nozzle.

The nozzle pipe shall be mounted on an elevated supporting stand in such a manner that it can be rotated through 360 degrees horizontally and inclined vertically from at least 20 degrees below to at least 60 degrees above the horizontal. There shall be a quick-acting, three-way control valve connecting the recirculating line to the nozzle pipe and mounted so that the nozzle operator can control and regulate the amount of flow of mixture delivered to the nozzle. At least three different types of nozzles shall be supplied so that mixtures may be properly sprayed over distance varying from 20 to 100 ft (6 to 30 m). One shall be a close-range ribbon nozzle, one a medium-range ribbon nozzle, and one a long-range jet nozzle. For case of removal and cleaning, all nozzles shall be connected to the nozzle pipe by means of quick-release couplings.

In order to reach areas inaccessible to the regular equipment, an extension hose at least 50 ft (15 m) in length shall be provided to which the nozzles may be connected.

c. Mixtures. Lime, if required, shall be applied separately, in the quantity specified, prior to the fertilizing and seeding operations. Not more than 220 pounds (100 kg) of lime shall be added to and mixed with each 100 gallons (380 liters) of water. Seed and fertilizer shall be mixed together in the relative proportions specified, but not more than a total of 220 pounds (100 kg) of these combined solids shall be added to and mixed with each 100 gallons (380 liters) of water.

All water used shall be obtained from fresh water sources and shall be free from injurious chemicals and other toxic substances harmful to plant life. Brackish water shall not be used at any time. The Contractor shall identify to the Engineer all sources of water at least 2 weeks prior to use. The Engineer may take samples of the water at the source or from the tank at any time and have a laboratory test the samples for chemical and saline content. The Contractor shall not use any water from any source that is disapproved by the Engineer following such tests.

All mixtures shall be constantly agitated from the time they are mixed until they are finally applied to the seedbed. All such mixtures shall be used within 2 hours from the time they were mixed or they shall be wasted and disposed of at locations acceptable to the Engineer.

d. Spraying. Lime, if required, shall be sprayed only upon previously prepared seedbeds. After the applied lime mixture has dried, the lime shall be worked into the top 3 in (8 cm), after which the seedbed shall again be properly graded and dressed to a smooth finish.

Mixtures of seed and fertilizer shall only be sprayed upon previously prepared seedbeds ~~on~~ which ~~the lime, if required, shall~~ already have been worked in. The mixtures shall be applied by means of a high-pressure spray that shall always be directed upward into the air so that the mixtures will fall to the ground like rain in a uniform spray. Nozzles or sprays shall never be directed toward the ground in such a manner as might produce erosion or runoff.

Particular care shall be exercised to insure that the application is made uniformly and at the prescribed rate and to guard against misses and overlapped areas. Proper predetermined quantities of the mixture in accordance with specifications shall be used to cover specified sections of known area.

Checks on the rate and uniformity of application may be made by observing the degree of wetting of the ground or by distributing test sheets of paper or pans over the area at intervals and observing the quantity of material deposited thereon.

On surfaces that are to be mulched as indicated by the plans or designated by the Engineer, seed and fertilizer applied by the spray method need not be raked into the soil or rolled. However, on surfaces on which mulch is not to be used, the raking and rolling operations will be required after the soil has dried.

901-3.4 MAINTENANCE OF SEEDED AREAS. The Contractor shall protect seeded areas against traffic or other use by warning signs or barricades, as approved by the Engineer. Surfaces gullied or otherwise damaged following seeding shall be repaired by regrading and reseeding as directed. The Contractor shall mow, water as directed, and otherwise maintain seeded areas in a satisfactory condition until final inspection and acceptance of the work. The Contractor will be required to water seeded areas three days per week until the proper stand of grass is established and approved by the Engineer. The Contractor shall water every other day such that the grass is watered at least three times per week. If the Contractor does not water the required three days per week, the days missed shall have the payment for seeding per acre reduced at a pro-rata share based upon the number of total days calculated for watering (less any rain days) times the number of days missed. It is imperative that the Contractor water consistently to ensure proper grass growth.

When either the dry or wet application method outlined above is used for work done out of season, it will be required that the Contractor establish a good stand of grass of uniform color and density to the satisfaction of the Engineer. A grass stand shall be considered adequate when bare spots are one square foot or less, randomly dispersed, and do not exceed 3 percent of the area seeded. If at the time when the contract has been otherwise completed it is not possible to make an adequate determination of the color, density, and uniformity of such stand of grass, payment for the unaccepted portions of the areas seeded out of season will be withheld until such time as these requirements have been met.

901-3.5 ACCEPTABLE STAND OF GRASS. At the time of final inspection, a healthy, uniform, close stand of grass shall be established, free of weeds and surface irregularities, with coverage exceeding 90% over any 10 square feet and bare spots not exceeding 5-inches x 5-inches.

METHOD OF MEASUREMENT

901-4.1 The quantity of seeding to be paid for shall be the number of units **~~[1,000 sq ft (sq m)]~~ [acres (sq m)]** measured on the ground surface, outside the limits of pavement, but within the areas disturbed by construction or as shown on the plans completed and accepted.

BASIS OF PAYMENT

901-5.1 Payment shall be made at the contract unit price per **~~[1,000 sq ft (sq m)]~~ [acre (sq m)]** or fraction thereof, which price and payment shall be full compensation for tilling the soil, for furnishing and placing all material and for all labor, equipment, tools, and incidentals necessary to complete the work prescribed in this item.

Payment will be made under:

Item 901-5.1	Hydro-Mulch Seeding-per ~~[1,000 sq ft (sq m)]~~ [acre (sq m)]

MATERIAL REQUIREMENTS

ASTM C 602	Agricultural Liming Materials
ASTM D 977	Emulsified Asphalt
FED SPEC A-A-1909	Fertilizer

END OF ITEM T-901

ITEM T-904 SODDING

DESCRIPTION

904-1.1 This item shall consist of furnishing, hauling, and placing approved live sod on prepared areas in accordance with this specification at the locations shown on the plans or as directed by the Engineer.

MATERIALS

904-2.1 SOD. Sod furnished by the Contractor shall have a good cover of living or growing grass. This shall be interpreted to include grass that is seasonally dormant during the cold or dry seasons and capable of renewing growth after the dormant period. All sod shall be obtained from areas where the soil is reasonably fertile and contains a high percentage of loamy topsoil. Sod shall be cut or stripped from living, thickly matted turf relatively free of weeds or other undesirable foreign plants, large stones, roots, or other materials that might be detrimental to the development of the sod or to future maintenance. At least 70% of the plants in the cut sod shall be composed of the species stated in the special provisions, and any vegetation more than 6 in (150 mm) in height shall be mowed to a height of 3 in (75 mm) or less before sod is lifted. Sod, including the soil containing the roots and the plant growth showing above, shall be cut uniformly to a thickness not less than that stated herein.

Millet grass is expressly prohibited from being a part of the sod anywhere on the project. Should the Contractor utilize Millet knowingly or unknowingly in the sod used on the project, an initial fine of $1,000.00 will be levied. An additional $1,000.00 per day fine shall be levied on the Contractor for each day the Millet seed is not removed from the sod used on the project. The fines levied shall be recorded daily and shall be deducted from the Contractor's earnings at the end of the project. The Contractor shall submit a certification of the sod provided for this project stating no millet is present or used in the sod.

904-2.2 LIME. Lime shall conform to the requirements of 901-2.2.

904-2.3 FERTILIZER. Fertilizer shall conform to the requirements of 901-2.3. Fertilizers shall be 10-10-10 commercial fertilizer and spread at the rate of 100 pounds per acre as a minimum or type and rate as recommended by the United States Department of Agriculture Local Extension Service Office to achieve the best results for the time of year, placement geography and irrigation conditions.

904-2.4 WATER. The water shall be sufficiently free from oil, acid, alkali, salt, or other harmful materials that would inhibit the growth of grass. It shall be subject to the approval of the Engineer prior to use.

904-2.5 SOIL FOR REPAIRS. The soil for fill and topsoiling of areas to be repaired prior to any sod placement, shall be at least of equal quality to that which exists in areas adjacent to the area to be repaired. The soil shall be free from stones larger than 2 inches (50 mm) in any diameter, sticks, stumps, and other debris that might interfere with sodding, growth of grasses, or subsequent maintenance of grass covered areas. Such soil shall comply with requirements or topsoil depending on location and placement, as directed by the Engineer. The Engineer shall approve material before material is placed.

CONSTRUCTION METHODS

904-3.1 GENERAL. Areas to be solid, strip, or spot sodded shall be shown on the plans. Areas requiring special ground surface preparation such as tilling and those areas in a satisfactory condition that are to remain undisturbed shall also be shown on the plans.

Suitable equipment necessary for proper preparation of the ground surface and for the handling and placing of all required materials shall be on hand, in good condition, and shall be approved by the Engineer before the various operations are started. The Contractor shall demonstrate to the Engineer

before starting the various operations that the application of required materials will be made at the specified rates.

904-3.2 PREPARING THE GROUND SURFACE. After grading of areas has been completed and before applying fertilizer and limestone, areas to be sodded shall be raked or otherwise cleared of stones larger than 2 in (50 mm) in any diameter, sticks, stumps, and other debris which might interfere with sodding, growth of grasses, or subsequent maintenance of grass-covered areas. If any damage by erosion or other causes occurs after grading of areas and before beginning the application of fertilizer ~~and ground limestone~~, the Contractor shall repair such damage. This may include filling gullies, smoothing irregularities, and repairing other incidental damage.

904-3.3 APPLYING FERTILIZER AND GROUND LIMESTONE. Following ground surface preparation, fertilizer shall be uniformly spread at a rate which will provide not less than the minimum quantity of each fertilizer ingredient, as stated in the special provisions. If use of ground limestone is required, it shall then be spread at a rate that will provide not less than the minimum quantity stated in T-901, Seeding , Section 901-2.3, Fertilizer. These materials shall be incorporated into the soil to a depth of not less than 2 in (50 mm) by discing, raking, or other methods acceptable to the Engineer. Any stones (50 mm) in any diameter, large clods, roots, and other litter brought to the surface by this operation shall be removed.

904-3.4 OBTAINING AND DELIVERING SOD. After inspection and approval of the source of sod by the Engineer, the sod shall be cut with approved sod cutters to such a thickness that after it has been transported and placed on the prepared bed, but before it has been compacted, it shall have a uniform thickness of not less than 2 in (50 mm). Sod sections or strips shall be cut in uniform widths, not less than 10 in (250 mm), and in lengths of not less than 18 in (45 cm), but of such length as may be readily lifted without breaking, tearing, or loss of soil. Where strips are required, the sod must be rolled without damage with the grass folded inside. The Contractor may be required to mow high grass before cutting sod.

The sod shall be transplanted within 24 hours from the time it is stripped, unless circumstances beyond the Contractor’s control make storing necessary. In such cases, sod shall be stacked, kept moist, and protected from exposure to the air and sun and shall be kept from freezing. Sod shall be cut and moved only when the soil moisture conditions are such that favorable results can be expected. Where the soil is too dry, permission to cut sod may be granted only after it has been watered sufficiently to moisten the soil to the depth the sod is to be cut.

The Contractor shall, for each load of sod, submit a written certification from the sod source certifying the sod sources are free of Tropical Soda Apple seed source and plants as well as Millet seed. Any Tropical Soda Apple plants or Millet seed that propagate in the areas of new sod shall be controlled by the Contractor, at the Contractor's sole cost without compensation, until all Tropical Soda Apple plants and/or Millet grass have been eradicated in the affected areas. The time frame for eradication or emergence of plant specimens shall be the full and complete Warranty Period or as directed by the Owner.

904-3.5 LAYING SOD. Sodding shall be performed only during the seasons when satisfactory results can be expected. Frozen sod shall not be used and sod shall not be placed upon frozen soil. Sod may be transplanted during periods of drought with the approval of the Engineer, provided the sod bed is watered to moisten the soil to a depth of at least 4 in (100 mm) immediately prior to laying the sod.

The sod shall be moist and shall be placed on a moist earth bed. Pitch forks shall not be used to handle sod, and dumping from vehicles shall not be permitted. The sod shall be carefully placed by hand, edge to edge and with staggered joints, in rows at right angles to the slopes, commencing at the base of the area to be sodded and working upward. The sod shall immediately be pressed firmly into contact with the sod bed by tamping or rolling with approved equipment to provide a true and even surface, and insure knitting without displacement of the sod or deformation of the surfaces of sodded areas. Where the sod may be displaced during sodding operations, the workmen when replacing it shall work from ladders or treaded planks to prevent further displacement. Screened soil of good quality shall be used to fill all

cracks between sods. The quantity of the fill soil shall not cause smothering of the grass. Where the grades are such that the flow of water will be from paved surfaces across sodded areas, the surface of the soil in the sod after compaction shall be set approximately 1 in (25 mm) below the pavement edge. Where the flow will be over the sodded areas and onto the paved surfaces around manholes and inlets, the surface of the soil in the sod after compaction shall be placed flush with pavement edges.

On slopes steeper than 1 vertical to 2-1/2 horizontal and in v-shaped or flat-bottom ditches or gutters, the sod shall be pegged with wooden pegs not less than 12 in (300 mm) in length and have a cross-sectional area of not less than 3/4 sq in (18 sq mm). The pegs shall be driven flush with the surface of the sod.

904-3.6 WATERING. Adequate water and watering equipment must be on hand before sodding begins, and sod shall be kept moist until it has become established and its continued growth assured. In all cases, watering shall be done in a manner that will avoid erosion from the application of excessive quantities and will avoid damage to the finished surface. The Contractor will be required to water sodded areas three days per week until the sod is well established, has good color and is approved by the Engineer. The Contractor shall water every other day such that the sod is watered at least three times per week. If the Contractor does not water the required three days per week, the days missed shall have the payment for sod per square foot reduced at a pro-rata share based upon the number of total days calculated for watering (less any rain days) times the number of days missed. It is imperative that the Contractor water consistently to ensure proper sod growth.

904-3.7 ESTABLISHING TURF.

a. General. The Contractor shall provide general care for the sodded areas as soon as the sod has been laid and shall continue until final inspection and acceptance of the work.

b. Protection. All sodded areas shall be protected against traffic or other use by warning signs or barricades approved by the Engineer.

c. Mowing. The Contractor shall mow the sodded areas with approved mowing equipment, depending upon climatic and growth conditions and the needs for mowing specific areas. In the event that weeds or other undesirable vegetation are permitted to grow to such an extent that, either cut or uncut, they threaten to smother the sodded species, they shall be mowed and the clippings raked and removed from the area.

904-3.8 REPAIRING. When the surface has become bullied or otherwise damaged during the period covered by this contract, the affected areas shall be repaired to re-establish the grade and the condition of the soil, as directed by the Engineer, and shall then be sodded as specified in 904-3.5.

METHOD OF MEASUREMENT

904-4.1 This item shall be measured on the basis of the area in square yards (square meters) of the surface covered with sod and accepted.

BASIS OF PAYMENT

904-5.1 This item will be paid for on the basis of the contract unit price per square yard (square meter) for sodding, which price shall be full compensation for all labor, equipment, material, staking, and incidentals necessary to satisfactorily complete the items as specified.

Payment will be made under:

Item T-904-5.1 Sodding -- Per Square Yard ~~(square meter)~~

END OF ITEM T-904

ITEM T-905 TOPSOILING

DESCRIPTION

905-1.1 This item shall consist of preparing the ground surface for topsoil application, removing topsoil from designated stockpiles or areas to be stripped on the site or from approved sources off the site, and placing and spreading the topsoil on prepared areas in accordance with this specification at the locations shown on the plans or as directed by the Engineer.

MATERIALS

905-2.1 TOPSOIL. Topsoil shall be the surface layer of soil with no admixture of refuse or any material toxic to plant growth, and it shall be reasonably free from subsoil and stumps, roots, brush, stones (2 inches or more in diameter), and clay lumps or similar objects. Brush and other vegetation that will not be incorporated with the soil during handling operations shall be cut and removed. Ordinary sods and herbaceous growth such as grass and weeds are not to be removed but shall be thoroughly broken up and intermixed with the soil during handling operations. The topsoil or soil mixture, unless otherwise specified or approved, shall have a pH range of approximately 5.5 pH to 7.6 pH, when tested in accordance with the methods of testing of the association of official agricultural chemists in effect on the date of invitation of bids. The organic content shall be not less than 3% nor more than 20% as determined by the wet-combustion method (chromic acid reduction). There shall be not less than 20% nor more than 80% of the material passing the 200 mesh (0.075 mm) sieve as determined by the wash test in accordance with ASTM C 117.

Natural topsoil may be amended by the Contractor with approved materials and methods to meet the above specifications.

905-2.2 INSPECTION AND TESTS. Within 10 days following acceptance of the bid, the Engineer shall be notified of the source of topsoil to be furnished by the Contractor. The topsoil shall be inspected to determine if the selected soil meets the requirements specified and to determine the depth to which stripping will be permitted. At this time, the Contractor may be required to take representative soil samples from several locations within the area under consideration and to the proposed stripping depths, for testing purposes as specified in 905-2.1.

CONSTRUCTION METHODS

905-3.1 GENERAL. Areas to be topsoiled shall be shown on the plans. If topsoil is available on the site, the location of the stockpiles or areas to be stripped of topsoil and the stripping depths shall be shown on the plans.

Suitable equipment necessary for proper preparation and treatment of the ground surface, stripping of topsoil, and for the handling and placing of all required materials shall be on hand, in good condition, and approved by the Engineer before the various operations are started.

905-3.2 PREPARING THE GROUND SURFACE. Immediately prior to dumping and spreading the topsoil on any area, the surface shall be loosened by discs or spike-tooth harrows, or by other means approved by the Engineer, to a minimum depth of 2 inches (50 mm) to facilitate bonding of the topsoil to the covered subgrade soil. The surface of the area to be topsoiled shall be cleared of all stones larger than 2 inches (50 mm) in any diameter and all litter or other material which may be detrimental to proper bonding, the rise of capillary moisture, or the proper growth of the desired planting. Limited areas, as shown on the plans, which are too compact to respond to these operations shall receive special scarification.

Grades on the area to be topsoiled, which have been established by others as shown on the plans, shall be maintained in a true and even condition. Where grades have not been established, the areas shall be smooth-graded and the surface left at the prescribed grades in an even and properly compacted condition to prevent, insofar as practical, the formation of low places or pockets where water will stand.

905-3.3 OBTAINING TOPSOIL. Prior to the stripping of topsoil from designated areas, any vegetation, briars, stumps and large roots, rubbish or stones found on such areas, which may interfere with subsequent operations, shall be removed using methods approved by the Engineer. Heavy sod or other cover, which cannot be incorporated into the topsoil by discing or other means shall be removed.

When suitable topsoil is available on the site, the Contractor shall remove this material from the designated areas and to the depth as directed by the Engineer. The topsoil shall be spread on areas already tilled and smooth-graded, or stockpiled in areas approved by the Engineer. Any topsoil stockpiled by the Contractor shall be rehandled and placed without additional compensation. Any topsoil that has been stockpiled on the site by others, and is required for topsoiling purposes, shall be removed and placed by the Contractor. The sites of all stockpiles and areas adjacent thereto which have been disturbed by the Contractor shall be graded if required and put into a condition acceptable for seeding.

When suitable topsoil is secured off the airport site, the Contractor shall locate and obtain the supply, subject to the approval of the Engineer. The Contractor shall notify the Engineer sufficiently in advance of operations in order that necessary measurements and tests can be made. The Contractor shall remove the topsoil from approved areas and to the depth as directed. The topsoil shall be hauled to the site of the work and placed for spreading, or spread as required. Any topsoil hauled to the site of the work and stockpiled shall be rehandled and placed without additional compensation.

905-3.4 PLACING TOPSOIL. The topsoil shall be evenly spread on the prepared areas to a uniform depth of 2 inches (50 mm) after compaction, unless otherwise shown on the plans or stated in the special provisions. Spreading shall not be done when the ground or topsoil is frozen, excessively wet, or otherwise in a condition detrimental to the work. Spreading shall be carried on so that turfing operations can proceed with a minimum of soil preparation or tilling.

After spreading, any large, stiff clods and hard lumps shall be broken with a pulverizer or by other effective means, and all stones or rocks (2 inches (50 mm) or more in diameter), roots, litter, or any foreign matter shall be raked up and disposed of by the Contractor. after spreading is completed, the topsoil shall be satisfactorily compacted by rolling with a cultipacker or by other means approved by the Engineer. The compacted topsoil surface shall conform to the required lines, grades, and cross sections. Any topsoil or other dirt falling upon pavements as a result of hauling or handling of topsoil shall be promptly removed.

METHOD OF MEASUREMENT

905-4.1 Topsoil obtained on the site shall be measured by the number of cubic yards (cubic meters) of topsoil measured in its original position and stripped or excavated. Topsoil stockpiled by others and removed for topsoiling by the Contractor shall be measured by the number of cubic yards (cubic meters) of topsoil measured in the stockpile. Topsoil shall be measured by volume in cubic yards (cubic meters) computed by the method of end areas.

905-4.2 Topsoil obtained off the site shall be measured by the number of cubic yards (cubic meters) of topsoil measured in its original position and stripped or excavated. Topsoil shall be measured by volume in cubic yards (meters) computed by the method of end areas.

BASIS OF PAYMENT

905-5.1 Payment will be made at the contract unit price per cubic yard (cubic meter) for topsoiling (obtained on site). This price shall be full compensation for furnishing all materials and for all preparation, placing, and spreading of the materials, and for all labor, equipment, tools, and incidentals necessary to complete the item.

Payment will be made under:

Item T-905-5.1 Topsoiling (obtained on site) - per cubic yard

TESTING MATERIALS

ASTM C 117 Materials Finer than 75-μm (No. 200) Sieve in Mineral Aggregates by Washing

END OF ITEM T-905

THE FOLLOWING ITEMS ARE SPECIAL PROVISIONS TO THE CITY OF SAN ANTONIO STANDARD SPECIFICATIONS FOR CONSTRUCTION DATED JUNE 2008

1. Item 700 Project Schedules.....7 Pages

General

1. None

Standard Specifications

1. Delete Item 700 - Cost Loaded Schedules *(dated June 2008)* in its entirety and replace with Item 700 – Project Schedules *(dated February 2010)* shown on the attached document.

ITEM 700
PROJECT SCHEDULES

This item shall govern the creation, maintenance, and delivery of Critical Path Method (CPM) project schedules.

CRITICAL PATH METHOD PROJECT SCHEDULE

The Contractor shall create and maintain a Critical Path Method (CPM) Project Schedule showing the manner of execution of work that the contractor intends to follow in order to complete the contract within the allotted time. The project schedule shall employ computerized CPM for the planning, scheduling and reporting of the work as described in this specification. The CPM project schedule shall be prepared using the Precedence Diagram Method (PDM). The Contractor shall create and maintain the schedule using Primavera Project Manager 5.x or above or Primavera Contractor 4.1 or above. For construction contracts under $300K and project durations 90 days or less, the project schedule can be created and maintained in Microsoft Project software. The observance of the requirements herein is an essential part of the work to be done under the contract. No direct compensation will be allowed for fulfilling these requirements, as such work is considered subsidiary to the various bid items of the contract.

PERSONNEL

The Contractor shall provide an individual, referred to hereafter as the Scheduler, to create and maintain the Project Schedule. The Scheduler shall be proficient in Critical Path Method (CPM) analysis as demonstrated through certification from Project Management Institute (PMI), Association for the Advancement of Cost Engineering (AACE) or possess sufficient experience to be able to perform required tasks on the specified software and be able to prepare and interpret reports from the software. The Scheduler shall be made available for discussion or meetings when requested by the City.

PROJECT SCHEDULE

1. GENERAL:

At least twenty (20) calendar days prior to the pre-construction conference, the Contractor shall submit a Project Schedule, which shall show the sequence and interdependence of activities required for complete performance of the work. All schedule submittals shall be in the electronic form to include PDF plots of the schedule, a PDF plot defining the Critical Path and two week look-ahead, and include the native Primavera file format. The Contractor shall submit the schedule to the Web-portal and Project Manager via electronic mail, CD-Rom, floppy disc, or any other electronic media acceptable to the City. The City will review the Project Schedule within twenty (20) calendar days for compliance with the specifications and notify the Contractor at the pre-construction conference of its acceptability. No work shall begin until the City has accepted the Project Schedule.

2. SEQUENCE:

The Project Schedule shall show the sequence and interdependence of activities required for complete performance of the work. The Contractor shall be responsible for assuring all work sequences are logical and show a coordinated plan of the work. The purpose of

the City requiring the Project Schedule shall be to:

a. Ensure adequate planning during the execution and progress of the work in accordance with the allowable number of calendar days and all milestones.

b. Assure coordination of the efforts of the Contractor, City, Utilities and others that may be involved in the project and that activities are included in the schedule highlighting coordination points with others,

c. Assist the Contractor and City in monitoring the progress of the work and evaluating proposed changes to the contract, and

d. Assist the City in administering the contract time requirements.

3. ACTIVITIES:
Each activity on the Project Schedule shall include:

a. An activity number utilizing an alphanumeric designation system that is agreeable to the City;

b. Concise description of the work represented by the activity; and

c. Activity durations in whole work days with a maximum of twenty (20) work days. Durations greater than twenty (20) work days may be used for non-construction activities (mobilization, submittal preparation, curing, etc.), and other activities mutually agreeable between the City and Contractor.

The Contractor shall provide to the City a legend for all abbreviations. The activities shall be coded so that organized plots of the Project Schedule may be produced. Typical activity coding includes traffic control phase, location and work type. Show an estimated production rate per working day for each work activity. Activity durations shall be based on production rates shown.

4. WORK DURATION AND RESOURCES:
The schedule layout shall be grouped by Project and then by Work Breakdown Structure (WBS) for organizational purposes. The original and remaining duration shall be displayed. The grouping band will, by default, report work days planned. One additional level of effort activity shall be added to the schedule as a "time calculator" with a seven-day calendar without holidays. The calculation of their days will show up in the duration columns in Primavera.

If specified by general note, the Contractor shall plan and incorporate major resources into the Project Schedule. Major resources are defined as crews and equipment that constrain the Contractor from pursuing available work. The resources shall accurately represent the Contractor's planned equipment and manpower to achieve the productivity rates specified above.

Work shall be scheduled based upon the Contractor's standard work week utilizing the appropriate calendar assignments in Primavera software If the Contractor's initial baseline plan is to perform the Work on a six or seven-day work week, then the appropriate calendar in Primavera must be used and the Engineer must be notified in writing through the Submittal process. This does not affect the total calendar days allotted by the contract.

Assign working calendars for the days you plan to work. Designate all City holidays (12) as non-working days (holidays). For dates beyond the current calendar year assume that

the City holidays are the same as the current calendar year.
Seasonal weather conditions shall be considered and included in the Project Schedule for all work influenced by temperature and/or precipitation. Seasonal weather conditions shall be determined by an assessment of average historical climatic conditions. Average historical weather data is available through the National Oceanic and Atmospheric Administration (NOAA). These effects will be simulated through the use of work calendars for each major work type (i.e., earthwork, concrete paving, structures, asphalt, drainage, etc.). Project and work calendars should be updated each month to show days actually able to work on the various work activities.

Total float is defined as the amount of time between the early start date and the late start date, or the early finish date and the late finish date, for each and every activity in the schedule. Float time in the Project Schedule is a shared commodity between the City and the Contractor.

Only City responsible delays in activities that affect milestone dates or the contract completion date, as determined by CPM analysis, will be considered for a time extension.

5. OTHER REQUIREMENTS:

Code and organize all work by Work Breakdown Structure (WBS).An example WBS will be provided by the City.

Percent complete type shall be Duration Percent Complete.

Duration type shall be Fixed Units

Submittals shall be included in the schedule with a logical tie to what each drives.

Proposed Change Orders shall be added the schedule identifying it as a Proposed Change Order. This task must be linked to the schedule with logical ties and approved by the City. Upon approval of Change Order, task will be renamed identifying work performed and Change Order number and resources will be added to the task.

Constraints are limited to project start, project finish, material delivery, and use on Submittals. If a schedule requires additional constraints, then an explanation shall accompany the schedule Submittal.

The schedule shall include activity milestones for material delivery.

Default progress is disallowed.

If work is performed out of sequence, then an explanation must be included in the project narrative.

JOINT REVIEW, REVISION AND ACCEPTANCE

Within twenty (20) calendar days of receipt of the Contractor's proposed Project Schedule, the City shall evaluate the schedule for compliance with this specification, and notify the Contractor of its findings. If the City requests a revision or justification, the Contractor shall provide a satisfactory revision or adequate justification to the satisfaction of the City within seven (7) calendar days. If the Contractor submits a Project Schedule for acceptance, which is based on a sequence of work not shown in the plans, then the Contractor shall notify the City in writing, separate from the schedule submittal.

The City's review and acceptance of the Contractor's Project Schedule is for conformance to the requirements of the

contract documents only. Review and acceptance by the City of the Contractor's Project Schedule does not relieve the Contractor of any of its responsibility for the Project Schedule or of the Contractor's ability to meet interim milestone dates (if specified) and the contract completion date, nor does such review and acceptance expressly or by implication warrant, acknowledge or admit the reasonableness of the logic, durations, manpower or equipment loading of the Contractor's Project Schedule. In the event the Contractor fails to define any element of work, activity or logic and the City review does not detect this omission or error, such omission or error, when discovered by the Contractor or City shall be corrected by the Contractor at the next monthly schedule update and shall not affect the project completion date.

Acceptance by the City of a Baseline or project update schedule that exceeds contractual time does not alleviate the Contractor from meeting the contractual completion date.

Payment may be delayed until acceptable baseline or updated schedule is received and accepted by the City.

UPDATES

The Project Schedule shall be updated on a monthly basis. The Project Schedule update shall be submitted one week prior to the pay application submittal. The Contractor shall meet with the City each month at a scheduled update meeting to review actual progress made through the Data Date of the schedule update as determined by the Project Manager. The review of progress will include dates activities actually started and/or completed, the percentage of work completed, the remaining duration of each activity started and/or completed, and the amount of work to complete with an analysis of the relationship between the remaining duration of the activity and the quantity of material to install over that given period of time with a citation of past productivity. The monthly schedule update shall include a progress narrative explaining progress, identifying progress made out of sequence, defining the Critical Path, identification of any potential delays, etc. The Project Schedule Narrative template will be required for the narrative.

The project schedule update layout shall be grouped by Project, then WBS. The layout shall include the following columns:

a. Activity ID
b. Activity Description
c. Original Durations
d. Remaining Durations
e. Start and Finish Dates
f. Baseline Start and Finish Dates
g. Total Float
h. Performance Percent Complete
i. Display logic and target bars in the Gantt bar chart view

PROJECT SCHEDULE REVISIONS

If the Contractor desires to make major changes in the Project Schedule, the Contractor shall notify the City in writing and submit the proposed schedule revision. The written notification shall include the reason for the proposed revision, what the revision is comprised of, and how the revision was incorporated into the schedule. Major changes are hereby defined as those that may affect compliance with the contract requirements or those that change the critical path. All other changes may be accomplished through the monthly updating process without written notification.

TIME IMPACT ANALYSIS

The Contractor shall notify the City when an impact may justify an extension of contract time or adjustment of milestone dates. This notice shall be made in writing as soon as

possible, but no later than the end of the next estimate period after the commencement of an impact or the notice for a change is given to the Contractor. Not providing notice to the City within twenty (20) calendar days after receipt will indicate the Contractor's approval of the time charges as shown on that time statement. Future consideration of that statement will not be permitted and the Contractor forfeits his right to subsequently request a time extension or time suspension unless the circumstances are such that the Contractor could not reasonably have knowledge of the impact by the end of the next estimate period.

When changes are initiated or impacts are experienced, the Contractor shall submit to the City a written time impact analysis describing the influence of each change or impact. A "time impact analysis" is an evaluation of the effects of changes in the construction sequence, contract, plans, or site conditions on the Contractor's plan for constructing the project, as represented by the schedule. The purpose of the time impact analysis is to determine if the overall project has been delayed, and if necessary, to provide the Contractor and the City a basis for making adjustments to the contract.

A time impact analysis shall consist of one or all of the steps listed below:

1. Establish the status of the project before the impact using the most recent project schedule update prior to the impact occurrence.

2. Predict the effect of the impact on the most recent project schedule update prior to the impact occurrence. This requires estimating the duration of the impact and inserting the impact into the schedule update. Any other changes made to the schedule including modifications to the calendars or constraints shall be noted.

3. Track the effects of the impact on the schedule during its occurrence. Note any changes in sequencing, and mitigation efforts.

4. Compare the status of the work prior to the impact (Step 1) to the prediction of the effect of the impact (Step 2), and to the status of the work during and after the effects of the impact are over (Step 3). Note that if an impact causes a lack of access to a portion of the project, the effects of the impact may extend to include a reasonable period for remobilization.

The time impact analysis shall be electronically submitted to the City. If the Project Schedule is revised after the submittal of a time impact analysis but prior to its approval, the Contractor shall promptly indicate in writing to the City the need for any modification to its time impact analysis. One (1) copy of each time impact analysis shall be submitted within fourteen (14) calendar days after the completion of an impact. The City may require Step 1 and Step 2 of the time impact analysis be submitted at the commencement of the impact, if needed to make a decision regarding the suspension of contract time. Approval or rejection of each time impact analysis by the City shall be made within fourteen (14) calendar days after receipt unless subsequent meetings and negotiations are necessary.

MEASUREMENT and PAYMENT

Project Schedule will not be measured or paid for directly, but shall be included in the unit price bid for the items of construction in which the operations occur.

PROJECT SCHEDULE NARRATIVE

PROJECT NAME:	
CONTRACTOR NAME:	
PERIOD ENDING:	
SUBMITTAL DATE:	
PREPARED BY:	

Evaluation Summary	
NTP:	
Data Date:	
Contractual Completion Date:	
Current Scheduled Completion Date:	
Previous Period Scheduled Completion Date:	
Contract Calendar Days:	

Yes	No	
		Contractor has included both a hard copy (pdf) and the native Primavera file format?
		Project calendars have been updated to reflect actual charged working days for the progress period, according to the contract time statement?
		Schedule update reflects approved change orders for the progress period?
		Have any major changes been made to the schedule? *(A major change is defined as those that may affect compliance with the contract requirements or those that change the critical path. If yes, written notification is required to include the reason for the proposed revision, what the revision is comprised of, and how the revision was incorporated into the schedule.)* If yes, provide details in Section 3 & 5 below.
		Are any delays included in this schedule submittal for which the Contractor intends to submit a Time Impact Analysis (TIA) for a claim delay? If yes, provide details in Section 6 below.

1. Identify general progress for the update period.
2. Identify work performed out of sequence and provide an explanation for the reason.

3. Describe any changes made to the project's logic and the reason for the change(s).
4. Identify any new constraints used and provide an explanation for their use.
5. Define the critical path of the project, including any changes from the previous update.
6. Identify any delays that have occurred for the progress period, the reason for the delay, and current status.
7. Identify any potential delays and possible mitigation efforts.
8. Other comments.

CITY OF SAN ANTONIO
CAPITAL IMPROVEMENTS MANAGEMENT SERVICES

P.O. Box 839966 • San Antonio, Texas 78283-3966

June 26, 2013

Dear Contractor;

For all current and future projects awarded by the City of San Antonio, kindly be aware that you are required to adhere to the terms and conditions of the General Conditions for City of San Antonio Construction Contracts (hereafter referred to as the "General Conditions"). It is through those General Conditions that the City is able to ensure projects are built correctly and the project proceeds as required by the City.

Schedule Requirement

One of the key provisions of those General Conditions is **Section 3.10**, titled Contractor's Project Schedules. Under the City's General Conditions, among other obligations, a Contractor is obligated to create and maintain a Critical Path Method (hereafter referred to as "CPM") Project Schedule, showing the manner of execution of Work by which the Contractor intends to follow, in order to complete the Project within the allotted time. This CMP Schedule is required to be in Primavera 5.0 or Contractor 4.1 or greater submitted electronically to the CIMS Schedule and Project Manager.

Schedule Updates

After acceptance of the Contractor's CPM Project Schedule the City, pursuant to Section **3.10.9** of the General Conditions, Contractor is required to submit a thorough schedule update, to reflect progress to date on the Project and to reflect the current plans of Contractor to complete the Project on a monthly basis.

If Contractor has failed to submit an updated Project schedule, the City reserves the right to withhold payment until the Contractor complies with the schedule update requirement.

Time Impact Analysis

Under **Section 3.10 et al.** of the General Conditions, if a Contractor knows of an event that has occurred or will occur that will impact Contractor's submitted and approved schedule, the

CITY OF SAN ANTONIO
CAPITAL IMPROVEMENTS MANAGEMENT SERVICES

P.O. Box 839966 • San Antonio, Texas 78283-3966

Contractor is required to notify the City of the occurrence of the event causing the impact to the schedule within twenty (20) calendar days of the event. Failure to file such notification of an impact to the schedule with the City, results in the forfeiture of the Contractor's right to request a time extension or time suspension, based on the occurrence of that event.

Additionally, when changes are initiated or impacts are experienced, the Contractor electronically shall submit to the City a written Time Impact Analysis describing the influence of each change or impact. A Time Impact Analysis will be required as justification for making time adjustments to the Contract's completion date.

Recovery / Acceleration Schedule

Finally, under **Section 3.10.2** of the General Conditions, upon submission of the schedule update by the Contractor and review by the City, if the City concludes that the Contractor rate of Work is inadequate such that the Contractor will be unable to meet the contract Milestones or the contract's Substantial Completion date, the City then "may give written notice to the Contractor and direct the Contractor, at Contractor's sole expense, to propose and adopt a plan to accelerate the Work so that the Work conforms to the Project Schedule and Project Milestones previously agreed upon" by the City and the Contractor.

If you have any questions about any of the information contained in this letter, or if you wish to discuss any of the items addressed herein, do not hesitate to contact Thomas Gonzalez at (210) 207-1328 or CIMS.Schedules@sanantonio.gov.

Sincerely,

Lisa Torres

Lisa Torres
CIMS Scheduler

CC: Razi Hosseini, P.E.
Ruben Guerrero, P.E.

ITEM 800

PROJECT SIGNS

800.1 DESCRIPTION: This item shall consist of providing, installing, maintaining and (at the completion of the project) removing two (2) 4' X 8' project signs. The signs shall conform to the configuration and details indicated in a special sheet in the project specifications titled PROJECT SIGN DETAILS. These signs shall be installed at locations to be determined by the inspector.

800.2 MATERIAL: The signs shall be made of 3/4" plywood, grade A-C or better and each shall be mounted on two (2) 4" X 4" X 12' - 0" posts.

800.3 INSTALLATION: The installation will require embedding all posts a minimum of 3' - 0" below the ground.

800.4 PAYMENT: No direct payment will be made to the contractor for the work and materials required in providing, installing, maintaining and removing the signs. Such work and materials shall be considered subsidiary to the several items of work for which unit prices are provided in the proposal.

ITEM 801

TREE AND LANDSCAPE PROTECTION

This item shall govern the placing of protection for trees and other landscape plant material or natural areas to be protected during construction. No site preparation work shall begin in areas where tree preservation and treatment measures have not been completed and approved. *Where removal of trees is indicated on the drawings, they shall be marked as directed by the engineer or designated representatives*. This item shall also govern the excavation, filling, *trenching and boring* around trees described on the plans, and for furnishing all materials, water, labor, tools, equipment and supplies required as specified by this item or as indicated on the plans.

Reference Standards: City of San Antonio Tree Preservation ordinance # 85262

MATERIALS:

LEVEL I FENCE PROTECTION (Detail 1.1.2):

Fabric: Fabric (4 foot height or 1.2 m) shall consist of orange plastic fencing as shown on the plans and shall be woven with 2-inch (50 mm) mesh openings such that in a vertical dimension of 23 inches (584 mm) along the diagonals of the openings there shall be at least seven meshes.

1. Installation Posts: Installation posts shall be a minimum of *72* inches (1.5 m) long and steel "T" shaped with a minimum weight of 1.3 pounds per linear foot (6.3 kg per meter).
2. Tie Wire: Wire for attaching the fabric to the t-posts shall be not less than No. 12 gauge galvanized wire. Sufficient fastening material shall be furnished to provide for the securing of the fabric to the "T" line posts.
3. Used Materials: Previously-used materials, meeting the above requirements and when approved by the Engineer, may be used.

LEVEL IIA FENCE PROTECTION (Detail 1.1.3):

Materials same as Level I -OR-

LEVEL IIB FENCE PROTECTION (Detail 1.1.4):

1. Sleeve: 2x4 lumber to a height of 4 feet above the root crown.
2. 2x4 shall be utilized as called for on plan.
3. Tie Wire: Wire for securing the 2x4s shall not be less than No. 12 gauge.

OTHER MATERIALS:

1. Tree Dressing - Asphaltic Tree Wound Paint

CONSTRUCTION METHODS:

LEVEL I FENCE PROTECTION:

All trees and shrubs in the proximity of the construction site shall be protected prior to beginning any development activity.

Protective fencing shall be erected outside the dripline at locations shown in the plans or as directed by the Inspector and/or City Arborist or in accordance with the details shown on the plans at the drip line of trees (Root Protection Zone, RPZ) and/or landscape plant material including natural areas. Fencing shall be maintained and repaired by the contractor during site construction.

Protective fence locations in close proximity to street intersections or drives shall adhere to the City of San Antonio's site distance criteria.

The protective fencing shall be erected before site work commences and shall remain in place during the entire construction phase. Access to fenced areas will be permitted only with the approval of the engineer.

The installation posts will be placed every 6 feet (2 m) around the drip line or RPZ and embedded to 18 inches (457 mm) deep. Fabric attachment shall be attached to the installation posts by the use of sufficient wire ties to securely fasten the fabric to the "T" posts as to hold the fabric in a stable and upright position.

1. Do not clear, fill or grade in the RPZ of any tree.

2. Do not store, stockpile or dump any job material, soil or rubbish under the spread of the tree branches.

3. Do not park or store any equipment or supplies under the spread of the tree branches.

4. Do not set up any construction operations under the spread of the tree branches. (E.g. pipe cutting and threading, mortar mixing, painting or lumber cutting)

5. Do not nail or attach temporary signs, meters, switches, wires, bracing or any other item to the trees.

6. Do not permit runoff from waste materials including solvents, concrete washouts, asphalt tack coats (MC-30 oil), etc. to enter the RPZ. Barriers are to be provided to prevent such runoff substances from entering the RPZ whenever possible, including in an area where rain or surface water could carry such materials to the root system of the tree.

The contractor shall avoid cutting roots larger than one inch in diameter when excavation occurs near existing trees. Excavation in the vicinity of trees shall proceed with caution. The contractor shall contact the city inspector.

Remove all trees, shrubs or bushes to be cleared from protected root zone areas as directed by engineer by hand.

Trees damaged or lost due to contractor's negligence during construction shall be mitigated at the contractor's expense and to the engineer's satisfaction.

Any tree removal shall be approved by the city arborist prior to its removal.

Cover exposed roots at the end of each day with soil, mulch or wet burlap.

In critical root zone areas that cannot be protected during construction and where heavy traffic is anticipated, cover those areas with (8) inches of organic mulch to minimize soil compaction. This (8) inch depth of mulch shall be maintained throughout construction.

Water all trees, most heavily impacted by construction activities, deeply once a week during periods of hot dry weather. Spray tree crowns with water periodically to reduce dust accumulation on the leaves.

When installing concrete adjacent to the root zone of a tree, use a plastic vapor barrier behind the concrete to prohibit leaching of lime into the soil. See related specifications.

When an excavation or embankment is placed within the dripline of any tree greater than (8) inches in diameter, a Tree well shall be constructed to protect the tree as indicated, when the cut or fill exceeds (8) inches. See related specifications.

Where paving or filling is necessary within the dripline of any tree (8) inches or greater, a permeable pavement and aeration system must be installed as indicated. See related specifications.

CONSTRUCTION METHODS:

LEVEL II A FENCE PROTECTION:

Protective fencing shall be erected within the RPZ at locations shown in the plans or as directed by the Inspector and/or City Arborist or in accordance with the details shown on the plans at the drip line of trees (Root Protection Zone, RPZ) and/or landscape plant material including natural areas. Fencing shall be maintained and repaired by the contractor during site construction.

Fabric: Fabric (4 foot height or 1.2 m) shall consist of orange plastic fencing as shown on the plans and shall be woven with 2-inch (50 mm) mesh openings such that in a vertical dimension of 23 inches (584 mm) along the diagonals of the openings there shall be at least seven meshes.

1. Installation Posts: Installation posts shall be a minimum of *72* inches (1.5 m) long and steel "T" shaped with a minimum weight of 1.3 pounds per linear foot (6.3 kg per meter).
2. Tie Wire: Wire for attaching the fabric to the t-posts shall be not less than No. 12 gauge galvanized wire. Sufficient fastening material shall be furnished to provide for the securing of the fabric to the "T" line posts.
3. Used Materials: Previously-used materials, meeting the above requirements and when approved by the Engineer, may be used.

LEVEL II B FENCE PROTECTION:

Trunk protection shall be erected at locations shown in the plans or as directed by the Inspector and/or City Arborist shall be maintained and repaired by the contractor during site construction.

1. Installation Sleeve: 2x4 lumber to a height of 4 feet above the root crown.
2. Tie Wire for securing the 2x4s shall not be less than No. 12 gauge

MEASUREMENT:

Protective fencing will be measured by the linear foot of accepted work, complete in place for the duration of construction activity.

PAYMENT:

Tree and Landscape Protective Fencing will be paid for at the unit price bid per linear foot (meter), which price shall be full compensation for furnishing and placing all materials, manipulation, labor, tools, equipment and incidentals necessary to complete the work.

BID ITEMS

Item 801.1: Level I Protective Fencing - per linear foot (meter)

Item 801.2: Level IIA Protective Fencing - per linear foot (meter)

Item 801.3: Level IIB Protective Fencing - per linear foot (meter)

SAAS Minimum Requirements
for Contractor who elect to use SAAS Safety Plan

Minimum requirements for Contracts that deal with Construction Projects at SAAS should state:

"As a minimum the Safety Plan/Program must be incompliance with OSHA 29CFR 1910.132 – General Requirement, 1910.135 – Head Protection, 1910-133 – Eye and Face Protection, 1926-52(b) – Hearing Protection, 1926.103 – Respiratory Protection, 1910.95 – Personal Protective Equipment (PPE) and Life Saving Equipment and 1910.245 – Safety Signs. The Contractor must state which program he will follow during the construction period."

NOTE: Using the SAAS Minimum Requirements does not relieve the Contractor of its responsibility to meet the OSHA requirements.

Prior to Contract Award

1. If Prime Contractor has a Safety Plan/Program it must be review and approved by SAAS Safety Division, once construction starts San Antonio Safety Division will drop in unannounced periodically at the construction site to ensure compliance with the Company Safety Program. All subcontractors must comply with Prime Contractor Safety Plan/Program. At anytime it is noted that a worker/contractor is not in compliance it could be cause for Aviation Safety to curtail construction until everyone is in compliance.

2. If the Contractor elects to use San Antonio Aviation System (SAAS) Safety Plan/Program requirements, are as follows:
    a. All PPE will meet American National Standards Institute.
        i. Hard Hats will meet ANSI Standard Z89.1-2003,
        ii. Reflective Safety Vest will be ANSI 2, Class 2 or greater and will be worn correctly in accordance with the Airport Rules and Regulations, i.e. fasten in the front.
        iii. Safety Glasses or Goggles will meet ANSI Standard Z87.1-2003,
        iv. Ear Protection must be in the form of Ear Muffs or ear plugs with a NRR rating of 30 or greater.
        v. Eye Protection will meet ANSI Standard Z87.1-2003
        vi. Respirators as required for specific job function.
    b. Minimum PPE required on the job site is listed below. The PPE must be worn at all time while inside/on the job site.
        i. Hard Hats,
        ii. Reflective Safety Vest
        iii. Eye Protection
    c. The job site will have the following signage post at the entrance of the job site, as a minimum, as indicated below. The sign material and colors are set forth in American National Standards and are linked on OSHA's website.
        i. Danger Signs – OSHA requires danger signs will be red for the upper panel with a black outline on the borders and a white lower panel for additional wording. No variations are permitted. OSHA requires employers to educate employees that danger signs mean "immediate danger" and that precautions are necessary. Images of acceptable danger signs are contained in OSHA's regulations

1. “DANGER” – Additional Wording “Construction Area”

ii. Caution Signs – The purpose of caution signs is to warn of potential hazards or to caution against unsafe practices. According to OSHA regulations, caution signs have a yellow background. Black is required for the upper panel with yellow lettering, reading "CAUTION." The lower yellow panel is for additional wording that must be black.

1. “CAUTION” – Additional Wording “PPE Required – Hard Hats, Safety Glasses , Safety Vest as a minimum”

d. RESPONSIBILITIES

i. Prime Contractor will appoint a Safety Representative for the job site and furnish name and contact information to SAAS Planning and Development Division and Safety Division.

ii. Prime Contractor will ensure that all employees are properly trained in all aspects of OSHA required training. Must be able to show that all employees are trained if asked.

iii. Superintendent/Supervisor shall

1. Ensure that PPE is available for all employees under their control
2. Ensure employees are trained on the proper use, care, and cleansing of PPE
3. Maintain records on PPE assignments and training

4. Ensure that anyone (workers, engineers, inspectors and visitors) who enters job site has as minimum PPE on prior to entering the job sight and during the duration of time while on the job site.
    a. Hard Hats
    b. Reflective Safety Vest
    c. Safety Glasses
5. Post all the appropriate signage on the wall in the vicinity of the job site entrance, as a stated in paragraph 2C

iv. Employee shall
    1. Wear the required PPE
    2. Notify the supervisor of the need to repair or replace PPE

v. Aviation Department Safety Division/Planning and Development Division will visit the job site periodically to ensure that the Prime and subcontractors or incompliance with either the Prime Contractor Safety Plan/Program or SAAS Safety Plan/Program for Construction site per the awarded contract.

/ / S I G N E D / /
JOHN C CHASE, 15 Jul 2012
Safety Management System
Manager

Geotechnical Engineering Study

Storm Water Outfall Drop Structures
San Antonio International and Stinson Airports
San Antonio, Texas

Arias Job No. 2013-845

ARIAS
GEOPROFESSIONALS

Prepared For
Freese and Nichols, Inc.

October 31, 2014

ARIAS
GEOPROFESSIONALS
142 Chula Vista, San Antonio, Texas 78232 • Phone: (210) 308-5884 • Fax: (210) 308-5886

October 31, 2014
Arias Job No. 2013-845

Mr. Jay Scanlon, P.E.
Freese and Nichols, Inc.
4040 Broadway, Suite 600
San Antonio, Texas 78209

Via Email: jws@freese.com

RE: Geotechnical Engineering Study
Storm Water Outfall Drop Structures
San Antonio International and Stinson Airports
San Antonio, Texas

Dear Mr. Scanlon:

The results of our Geotechnical Engineering Study for the above referenced project are presented in this final report. The purpose of this engineering study was to establish geotechnical engineering criteria for use by design engineers to aid in preparing the final design for three (3) planned storm water outfall structures. Two (2) of the structures are located at the San Antonio International Airport, and the remaining structure is located at the Stinson Airport in San Antonio, Texas. Our findings and recommendations should be incorporated into the design and construction documents for the proposed development. Please consult with us as needed during any part of the design or construction process.

The long-term success of the project will be affected by the quality of materials used for construction and the adherence of the construction to the project plans and specifications. The quality of construction can be evaluated by implementing Quality Assurance (QA) testing. As the Geotechnical Engineer of Record (GER), we recommend that the site work, foundations, and below-grade walls be tested and observed by one of our representatives in accordance with the report recommendations. A summary of our qualifications to provide QA is discussed in the "Quality Assurance Testing" section of this report. Furthermore, a message to the Owner with regard to QA testing is provided in the ASFE publication included in Appendix F.

The opportunity to be of service is appreciated. If you have questions regarding this report or require additional information, please call.

Sincerely,
ARIAS & ASSOCIATES, INC.
TBPE Registration No. F-32

STATE OF TEXAS
TIMOTHY J. FOX
50177
LICENSED
PROFESSIONAL ENGINEER
10-31-2014

Timothy J. Fox, P.E.
Senior Geotechnical Engineer

Spencer A. Higgs, P.E.
Director of Engineering

TABLE OF CONTENTS

Page

INTRODUCTION 5

SCOPE OF SERVICES 5

PROJECT AND SITE DESCRIPTION 5

SOIL BORING AND LABORATORY TESTS 6

SUBSURFACE CONDITIONS 8
- Site Stratigraphy and Engineering Properties 8
- Groundwater Conditions 10
- Variations 11

STORM SEWER OUTFALL DROP STRUCTURES AND DISCHARGE CHANNELS 12
- General 12
- Allowable Bearing Pressure and Settlement 13
- Lateral Pressures and Buoyancy Considerations 13
- Backfill Requirements for Drop Structures 16
- Permanent Slopes, Site Drainage, and Erosion Protection 18

EXCAVATIONS, TEMPORARY BRACING, AND GROUNDWATER CONTROL 19
- Trenching, Shoring, and OSHA Classifications 19
- Lateral Earth Pressures – Temporary Excavation Bracing 21
- Groundwater Control 22
- Earthwork and Foundation Acceptance 22
- Excavations and Trenches 23
- Construction Site Drainage 23
- Flowable Fill 23
- Expansive Soil Considerations 23

CONSTRUCTION CRITERIA 24
- Site Preparation 24
- Fill Requirements 24

GENERAL COMMENTS 25
- Geotechnical Design Review 25
- Subsurface Variations 25
- Quality Assurance Testing 25
- Standard of Care 26

APPENDIX A: FIGURES AND PHOTOGRAPHS A-1

TABLE OF CONTENTS

Page

APPENDIX B: BORING LOGS AND KEY TO TERMS B-1

APPENDIX C: FIELD AND LABORATORY EXPLORATION C-1

APPENDIX D: GRAIN SIZE DISTRIBUTION CURVES D-1

APPENDIX E: ASFE INFORMATION – GEOTECHNICAL REPORT E-1

APPENDIX F: PROJECT QUALITY ASSURANCE F-1

Tables

Table 1: Approximate Boring Locations and Depths 7
Table 2: Generalized Soil Conditions at SAIA No. 5 and 7 Outfall Drop Structures 9
Table 3: Generalized Soil Conditions at Stinson Airport No. 1 Outfall Drop Structure 10
Table 4: Seismic Design Parameters 11
Table 5: Lateral At-Rest Pressures for SAIA Nos. 5 and 7 Drop Structures 14
Table 6: Lateral At-Rest Pressures for Stinson No. 1 Drop Structure 15
Table 7: OSHA Soil Classifications at Boring B-1 (SAIA No. 5) & B-2 (SAIA No. 7) 19
Table 8: OSHA Soil Classifications at Boring B-3 (Stinson No. 1) 20
Table 9: Temporary Excavation Bracing - Parameters for Short Term Conditions at Boring B-1 (SAIA No. 5) and B-2 (SAIA No. 7) 21
Table 10: Temporary Excavation Bracing - Parameters for Short Term Conditions at Boring B-3 (Stinson No. 1) 22

Figures in Appendix A

1 Site Vicinity Map
2 Boring Location Plan
3 Geologic Map

INTRODUCTION

This report presents the results of a geotechnical engineering study for the proposed storm water outfall drop structures at the San Antonio International and Stinson Airports in San Antonio, Texas. Our scope of work was performed in general accordance with Arias' Proposal No. 2013-845, dated September 30, 2013.

SCOPE OF SERVICES

The purpose of this geotechnical engineering study was to conduct a subsurface exploration and perform laboratory testing to establish engineering properties of the subsurface soil and groundwater conditions present at the site. This information was used to develop geotechnical engineering criteria for use by design engineers in preparing the design for the storm water outfall drop structures with rock riprap channel liners.

Global stability analyses or environmental studies were beyond our authorized scope of services for this project.

PROJECT AND SITE DESCRIPTION

FNI is assisting the City of San Antonio (COSA) with the design of storm water outfall drop structures with rock riprap channel liners to replace existing outfall structures that will be removed due to excessive erosion and deterioration. The areas that have been eroded adjacent to the existing outfall structures including the slopes will be re-graded and reconstructed with adequate erosion protection. The sites of the 3 outfall structures in San Antonio, Texas are summarized below:

- San Antonio International Airport (SAIA) No. 5,
- SAIA No. 7, and
- Stinson Airport No. 1.

The approximate locations of the 3 outfall structures are depicted on the Vicinity Map included as Figure 1 in Appendix A. The existing SAIA No. 5 and No. 7 outfall structures are located north of the SAIA and south of Salado Creek. The existing Stinson No. 1 outfall structure is located on the north side of Six Mile Creek south of the runway and east of Roosevelt Avenue. Photographs of the existing outfall structures are provided in Appendix A. Descriptions of the proposed new structures are summarized below:

- **SAIA No. 5** – We understand that the drop structure will consist of a 48-diameter concrete manhole connected to a 48-inch diameter concrete discharge pipe. The manhole is planned to extend about 22 feet below existing grades. The outlet pipe is proposed to discharge water into a 22-foot wide by 45-foot long channel with 3:horizontal on 1:vertical (3H:1V) side slopes. The bottom and slopes in the area of the discharge will be lined with 36 inches of rock riprap that will have a maximum rock size of 24 inches. The slope between the drop structure and drainage channel noted above is planned at 3H:1V.
- **SAIA No. 7** – The drop structure will consist of an 84-inch diameter concrete manhole connected to an 84-inch diameter concrete discharge pipe. The manhole is planned to extend about 25 feet below existing grades. The outlet pipe is proposed to discharge water into a 31-foot wide by 61-foot long channel with 3H:1V slopes. The bottom and slopes in the area of the discharge will be lined with 36 inches of rock riprap that will have a maximum rock size of 24 inches. The slope between the drop structure and drainage channel noted above is planned at 3H:1V.
- **Stinson No. 1** – The drop structure will consist of a 54-diameter concrete manhole connected to a 54-inch diameter concrete discharge pipe. The manhole is planned to extend about 16 feet below existing grades. The outlet pipe is proposed to discharge water into a 22.5-foot wide by 35.3-foot long channel with 3:horizontal on 1:vertical (3H:1V) slopes. The bottom and slopes in the area of discharge will be lined with 36 inches of rock riprap that will have a maximum rock size of 24 inches. The slope between the drop structure and drainage channel noted above is planned at 3H:1V.

SOIL BORING AND LABORATORY TESTS

We performed Borings B-1, B-2, and B-3 in the vicinity of the proposed storm water outfall drop structures SAIA No. 5, SAIA No. 7, and Stinson No. 1, respectively. The approximate boring locations are shown on the Boring Location Plan provided as Figure 2 in Appendix A. These borings were drilled to depths of about 24.5 to 34 feet below the existing ground surface on May 22, 2014. Photographs of the boring locations are provided in Appendix A.

Locations and depths of the borings were specified by FNI in consultation with Arias. We understand that the as-drilled boring locations are in the process of being surveyed. FNI will provide Arias with the surveyed State Plane Coordinates and ground surface elevations for inclusion in our final report. Table 1 given subsequently will be updated with the surveying information when our final report is submitted:

Table 1: Approximate Boring Locations and Depths

Boring No.	GPS Coordinates		Ground Surface Elevation (feet)	Depth Drilled (feet)
	North Latitude	West Longitude		
B-1	N29°32'22.7"	W98°28'8.9"	TBD	29.3
B-2	N29°32'21.6"	W98°28'2.3"	TBD	34.0
B-3	N29°20'11.5"	W98°28'36.6"	TBD	24.5

Note:

1. Ground surface elevations and State Plane coordinates will be provided to Arias. Boring depths are approximate and were measured relative to the existing ground surface at the time of the borings.
2. The GPS coordinates provided are based on Horizontal Datum NAD 83. These coordinates will be replaced with the surveyed State Plane coordinates in the final report.

The borings were sampled in accordance with ASTM D1586 for Split Spoon sampling techniques and ASTM D1587 for thin-walled tube sampling as described in Appendix C. A truck-mounted drill rig using continuous flight augers together with the sampling tool noted was used to secure the subsurface soil samples.

Upon completion of the sampling activities, the borings were backfilled with soil cuttings generated from the augering process.

Soil classifications and borehole logging were conducted during the exploration by our soil technician who is under the supervision of our Geotechnical Engineer. Final soil classifications, as seen on the attached boring logs (Appendix B), were determined in the laboratory based on laboratory and field test results and applicable ASTM procedures.

As a supplement to the field exploration, laboratory testing was conducted to determine soil water content, Atterberg Limits, partial sieve analysis, and unconfined compression. The laboratory results are reported in the attached boring logs included in Appendix B. A key to the terms and symbols used on the logs are also included in Appendix B. The results of the partial sieve analyses are plotted as a Grain Size Distribution curves in Appendix D. The soil laboratory testing for this project was done in accordance applicable ASTM procedures with the specifications and definitions for these tests listed in the Appendix C.

Remaining soil samples recovered from this exploration will be routinely discarded following submittal of this report.

SUBSURFACE CONDITIONS

Geology, generalized stratigraphy, and groundwater conditions at the project sites are discussed in the following sections. The subsurface and groundwater conditions are based on conditions encountered at the boring locations to the depths explored.

Geology

A Geologic Map is included as Figure 3 in Appendix A. The earth materials underlying the SAIA project site have been regionally mapped as the Leona Formation (Qle). The Leona Formation generally consists of a combination of clay, silt, sand and/or gravel that often grades down into coarse gravel near the bottom of the formation.

The earth materials underlying the Stinson Airport project site have been regionally mapped as the Fluviatile Terrace Deposits (Qt). The alluvium soils are floodplain deposits and consist primarily of clays containing various amounts of silt, sand, and gravel. The materials can be unconsolidated having relatively weak and compressible characteristics.

Site Stratigraphy and Engineering Properties

The general stratigraphic conditions at Borings B-1 and B-2 drilled at the San Antonio International Airport (SAIA) storm water outfall drop structures SAIA No. 5 and 7, respectively, are provided subsequently in Table 2. The general stratigraphic conditions at Boring B-3 drilled at the Stinson Airport storm water outfall drop structure No. 1 is provided thereafter in Table 3. *The presence and thickness of the various subsurface materials can be expected to vary away from and between the exploration locations.* The descriptions generally conform to the Unified Soils Classification System.

Table 2: Generalized Soil Conditions at SAIA No. 5 and 7 Outfall Drop Structures

Stratum	Depth, ft	Material Type	PI range / PI ave.	No. 200 range / No. 200 ave.	PP range / PP ave.	N range / N ave.
FILL	0 to 2	FILL: CLAYEY GRAVEL with Sand (GC); medium dense; brown or FAT CLAY (CH); stiff; brown	35	31	--	11 - 14
			--	--	--	13
FILL	2 to 4 - 9	FILL: SILTY GRAVEL with Sand (GM); dense; light tan and light gray	--	31	--	31 - 44
			--	--	--	35
I	4 - 9 to 13 - 28	FAT and/or LEAN CLAY with Sand (CH and/or CL); very stiff to hard; reddish brown, light gray, and light tan	31 - 33	73 - 81	6.25 - 7.5	19 - 39
			32	76	7.0	30
II	13 - 28 to 29.3 - 34	MARL with Sand; very hard; light tan and light gray; partially-cemented	31 - 32	73 - 79	--	61 - **50/5"
			32	76	--	100+

Where:
Depth - Depth from existing ground surface during geotechnical study, feet
PI - Plasticity Index, %
No. 200 - Percent passing #200 sieve, %
PP - Pocket Penetrometer Value (PP), tons per square foot
N - Standard Penetration Test (SPT) value, blows per foot
** - SPT blow counts during seating penetration

Table 3: Generalized Soil Conditions at Stinson Airport No. 1 Outfall Drop Structure

Stratum	Depth, ft	Material Type	PI range / PI ave.	No. 200 range / No. 200 ave.	PP range / PP ave.	N range / N ave.
FILL	0 - 1	FILL: FAT CLAY (CH); stiff; dark brown and light tan	--	--	--	13
			--	--	--	--
I	1 - 4	SANDY LEAN CLAY (CL); stiff to hard; dark brown	26	67	--	29
			--	--	--	--
II	4 - 24.5	FAT CLAY (CH); very stiff to very hard; gray brown, tan, light gray, and gray	39 - 56	84 - 94	3 - 14+	31 - 59
			48	89	9.4	44

Where: Depth - Depth from existing ground surface during geotechnical study, feet
PI - Plasticity Index, %
No. 200 - Percent passing #200 sieve, %
PP - Pocket Penetrometer Value (PP), tons per square foot
N - Standard Penetration Test (SPT) value, blows per foot

Groundwater Conditions

A dry sampling method was used to obtain the samples at the project site. Groundwater was not observed at the time of drilling to depths explored on May 22, 2014. On May 30, 2014, the groundwater levels were measured at depths of about 12.7 and 24.3 feet in the open boreholes of Borings B-1 and B-2, respectively. Borings B-1 and B-2 were open to depths of about 21.7 and 30.8 feet, respectively, when the water level measurements were performed.

On June 2, 2014, the groundwater level was measured at a depth of about 24 feet in the open borehole of Boring B-3. The B-3 borehole was open to a depth of about 24.2 feet at that time. It should be noted that water levels may require several hours to several days to stabilize in open boreholes depending on the permeability of the soils.

Groundwater levels at the time of construction may differ from those observed during the field exploration since the presence of perched groundwater is subject to seasonal conditions, recent rainfall, flooding, drought or temperature affects.

Clay soils are generally not conducive to readily transmit groundwater; however, gravels, sands, silts or open fractures and joints can store and readily transmit “perched” groundwater flow or seepage. Perched groundwater seepage can also occur at strata interfaces, particularly at gravel/clay interfaces.

The Contractor should be prepared with appropriate dewatering measures to dewater the site as necessary to allow for the proposed construction.

IBC Site Classification and Seismic Design Coefficients

Site classification according to the International Building Code (2012) is based on the soil profile to a 100-foot depth. The stratigraphy at the site location was explored to an approximate depth of 34 feet The soils encountered near the bottom of the boring were extrapolated to also be present from between 34 and 100-foot depths based on our experience with the local geologic conditions.

On the basis of the site class definitions included in Table 1613.5.2 and 1613.5.5 of the 2012 Code and the encountered generalized stratigraphy including SPT data, we characterize the site as Site Class D, a stiff soil profile.

Seismic design coefficients were determined using the on-line software, U.S. Seismic Design Maps Web Application, version 3.1.0, dated July 11, 2013, which was accessed through the following website: (http://earthquake.usgs.gov/designmaps/us/application.php). Analyses were performed considering the 2012 International Building Code (IBC). Input included GPS coordinates and Site Class D. Based on this information, the seismic design parameters for the site are summarized in the following table.

Table 4: Seismic Design Parameters

Site	Site Classification	F_a	F_v	S_s	S_1
SAIA	D	1.6	2.4	0.077 g	0.030 g
Stinson				0.085 g	0.029 g

Where: F_a = Site coefficient
F_v = Site coefficient
S_s = Mapped spectral response acceleration for short periods
S_1 = Mapped spectral response acceleration for a 1-second period

Variations

Subsurface soil and groundwater conditions may vary at other locations away from and between the boring locations. Transition boundaries or contacts noted on the boring logs to separate material types are approximate. Actual contacts may be gradual and vary at different locations. If conditions encountered during construction indicate more variation than established as a result of this study, we should be contacted to evaluate the significance of the changed conditions relative to our recommendations.

STORM SEWER OUTFALL DROP STRUCTURES AND DISCHARGE CHANNELS

General

The existing SAIA No. 5 and No. 7 outfall structures are located north of Skyplace Blvd. and south of Salado Creek. The existing Stinson No. 1 outfall structure is located on the north side of Six Mile Creek south of the runway and east of Roosevelt Avenue. Photographs of the existing outfall structures are provided in Appendix A. These outfall structures will be removed and the areas that have been eroded adjacent to the existing the structures, including the slopes, will be re-graded and reconstructed with adequate erosion protection.

Descriptions of the proposed new structures are summarized below:

- **SAIA No. 5** – We understand that the drop structure will consist of a 48-diameter concrete manhole connected to a 48-inch diameter concrete discharge pipe. The manhole is planned to extend about 22 feet below existing grades. The outlet pipe is proposed to discharge water into a 22-foot wide by 45-foot long channel with 3:horizontal on 1:vertical (3H:1V) side slopes. The bottom and slopes in the area of the discharge will be lined with 36 inches of rock riprap that will have a maximum rock size of 24 inches. The slope between the drop structure and drainage channel noted above is planned at 3H:1V.
- **SAIA No. 7** – The drop structure will consist of an 84-inch diameter concrete manhole connected to an 84-inch diameter concrete discharge pipe. The manhole is planned to extend about 25 feet below existing grades. The outlet pipe is proposed to discharge water into a 31-foot wide by 61-foot long channel with 3H:1V slopes. The bottom and slopes in the area of the discharge will be lined with 36 inches of rock riprap that will have a rock maximum size of 24 inches. The slope between the drop structure and drainage channel noted above is planned at 3H:1V.
- **Stinson No. 1** – The drop structure will consist of a 54-diameter concrete manhole connected to a 54-inch diameter concrete discharge pipe. The manhole is planned to extend about 16 feet below existing grades. The outlet pipe is proposed to discharge water into a 22.5-foot wide by 35.3-foot long channel with 3:horizontal on 1:vertical (3H:1V) slopes. The bottom and slopes in the area of the discharge will be lined with 36 inches of rock riprap that will have a maximum rock size of 24 inches. The slope between the drop structure and drainage channel noted above is planned at 3H:1V.

Geotechnical soil design parameters for the proposed storm water outfall drop structures and discharge channels are provided in the following sections. The results of our engineering analyses and recommendations provided herein were based on the conceptual design drawings provided to us by FNI. When the final plans are prepared, Arias should be given the opportunity to review them in order to determine whether additional recommendations should be provided. It should be noted that performing global stability analysis and/or

determining erosion control measures for the planned reconstructed slopes was not within our scope of work.

Allowable Bearing Pressure and Settlement

Based on FNI's conceptual design drawings, the SAIA No. 5 drop structure is anticipated to bear about 22 feet below the ground surface on the very hard, partially-cemented MARL. The SAIA No. 7 drop structure is anticipated to bear about 25 feet below the ground surface on the hard FAT CLAY (CH) or very hard, partially-cemented MARL. The Stinson No. 1 drop structure is anticipated to bear about 16 feet below the ground surface on the hard FAT CLAY (CH).

The allowable gross bearing pressures at the 3 drop structure locations are in excess of 6,000 psf, which include a factor of safety of 3.0; thus, bearing capacity is not considered a significant concern. Total and differential settlement of the drop structures should be less than ½ inch and ¼ inch, respectively, provided that the subgrade is prepared in accordance with the recommendations given subsequently in this report.

Lateral Pressures and Buoyancy Considerations

Lateral pressures that may act on the manhole drop structures can be evaluated by using the equivalent fluid density values provided subsequently for the corresponding type of backfill in Table 5 (SAIA Nos. 5 and 7) and in Table 6 (Stinson No. 1). The equivalent fluid density values are based on "at-rest" earth pressure conditions (i.e. assumes the manhole walls are restricted from moving).

The "EFD - submerged condition" values in Tables 5 and 6 should be used if there is a chance for hydrostatic forces to develop; otherwise, the "EFD – dry condition values" can be used.

Surcharge loads including equipment loads, traffic, and soil stockpiles should also be considered in the analysis of drop structures. The lateral pressures due to surcharge loading, which act as uniform pressures on the drop structures, should be calculated by multiplying the surcharge pressure by the applicable lateral earth pressure coefficients given in Tables 5 and 6.

Table 5: Lateral At-Rest Pressures for SAIA Nos. 5 and 7 Drop Structures

Backfill Type	Total Soil Unit Weight, (pcf)	Effective Soil Unit Weight, (pcf)	At-Rest Earth Pressure Coefficient, (k_o)	Equivalent Fluid Density (EFD)	
				Dry Condition, (pcf)	Submerged Condition, (pcf)
Clean Gravel	105	43	0.40	42	80
TxDOT Item 247, Type A, Grade 1 or 2	142	80	0.39	56	94
FILL: Clayey Gravel with Sand (GC) or Fat Clay (CH)	125	63	0.65	82	103
FILL: Silty Gravel with Sand (GM)	135	73	0.47	65	97
Fat to Lean Clay (CH-CL) (Stratum I)	125	63	0.70	88	107
Marl with Sand (Stratum II)	128	66	0.58	75	101

Notes:

1. The equivalent fluid unit density (EFD) values are for triangular distribution of lateral earth pressures on the walls.
2. We do not recommend expansive clays with liquid limit (LL) and plasticity index (PI) values greater than 40 and 20, respectively, be used as backfill, or be situated immediately behind the walls. Expansive soils located immediately behind the walls will not provide good wall drainage and may exert excessive lateral earth pressures due to swelling.
3. The equivalent fluid density values given above are based on the backfill being placed between the drop structure wall and a plane extending upward and outward from the bottom of the wall at a 45-degree angle or flatter from the horizontal. If less backfill is placed (i.e. plane more than 45 degrees), the equivalent fluid density used in design should correspond to the appropriate in situ material.

Table 6: Lateral At-Rest Pressures for Stinson No. 1 Drop Structure

Backfill Type	Total Soil Unit Weight, (pcf)	Effective Soil Unit Weight, (pcf)	At-Rest Earth Pressure Coefficient, (k_o)	Equivalent Fluid Density (EFD)	
				Dry Condition, (pcf)	Submerged Condition, (pcf)
Clean Gravel	105	43	0.40	42	80
TxDOT Item 247, Type A, Grade 1 or 2	142	80	0.39	56	94
FILL: Fat Clay (CH)	125	63	0.70	88	107
Lean Clay (CL) (Stratum I)	128	66	0.58	75	101
Fat Clay (CH) (Stratum II)	125	63	0.70	88	107

Notes:

1. The equivalent fluid unit density (EFD) values are for triangular distribution of lateral earth pressures on the wall.
2. We do not recommend expansive clays with liquid limit (LL) and plasticity index (PI) values greater than 40 and 20, respectively, be used as backfill, or be situated immediately behind the walls. Expansive soils located immediately behind the walls will not provide good wall drainage and may exert excessive lateral earth pressures due to swelling.
3. The equivalent fluid density values given above are based on the backfill being placed between the drop structure wall and a plane extending upward and outward from the bottom of the wall at a 45-degree angle or flatter from the horizontal. If less backfill is placed (i.e. plane more than 45 degrees), the equivalent fluid density used in design should correspond to the appropriate in situ material.

Measures should be taken to design against buoyancy forces. One way is to provide effective drainage along the walls and under the slab such that the water level in the backfill and bedding material corresponds to the receding floodwater level. Another method involves providing sufficient weight to resist buoyancy forces. The weight could include the structure, backfill over the structure, and/or backfill over slab extensions beyond the walls. A clay cap should be installed over the granular backfill to reduce surface water infiltration can be considered to help reduce the risk for surface water to enter more pervious granular backfill.

For calculating the factor of safety against potential sliding due to the lateral pressure acting on the wall, ultimate resistance parameters are given below for friction along the drop structure base and pipe.

- The sliding resistance along the drop structure can be calculated by multiplying a sliding resistant factor times the minimum sustained dead load bearing pressure acting on the drop structure base. We recommend an ultimate sliding resistance factor of 0.35 be used for elements bearing on the hard FAT CLAY (CH) or very hard MARL.

Backfill Requirements for Drop Structures

Removal of the existing outfall structures, excavation, backfilling for installation of the storm outfall drop structures (i.e. concrete manholes and pipes), and slope reconstruction should be in accordance with the CoSA Standard Specifications for Construction including:

- Item 400 Excavation, Trenching and Backfilling,
- Item 401 Reinforced Concrete Pipe,
- Item 550 Trench Excavation Safety Protection, and
- Item 551 Special Shoring.

For the slope reconstruction, it will be necessary to remove any loose or soft soils down to undisturbed stable soils, and proper “benching and keying” into the existing slope will be necessary prior to placement of engineered fill to achieve final grades.

If the bearing soils are disturbed or loose pockets are encountered in the bottom of the drop structure and slope reconstruction excavations, the disturbed/loose soils should be undercut and replaced or compacted in-place. Where in-place compaction is used, the upper 12 inches of subgrade should be moisture conditioned between minus one (-1) and plus three (+3) percentage points of optimum moisture content, and compacted to at least 95 % of the maximum dry density as determined using TEX-114-E. It may also be desirable to construct a working platform at the drop structure bearing level comprised of a lean concrete “mud-mat.”

The bedding material and the initial backfill to 12 inches above the drop structure pipes, and the secondary backfill above the primary backfill should meet the material and compaction requirements given in CoSA Item 400. The bedding and primary backfill should be placed in maximum loose lifts of 6 inches, moisture conditioned between -2% and plus three (3) percentage points of optimum moisture content, and compacted to at least 95 percent of the maximum dry density from TEX-113-E. If clean gravel materials are used, they should be compacted by making at least 5 passes with a vibratory plate compactor. The clean gravel should be wrapped with a non-woven geotextile fabric meeting the requirements of TxDOT DMS 6200, to reduce the risk of fine material migrating into the gravel voids, since this can lead to undesirable ground settlement.

Crushed Limestone Base Material can be used for backfilling of undercuts, bedding, initial backfill to 12 inches above the pipe, and secondary backfill above the pipe and around the manhole drop structure. Crushed limestone base material should meet the following requirements:

- CoSA Item 200, Type A, Grade 1 Flexible Base placed in maximum 10-inch loose lifts, moisture conditioned to between minus two (-2) and plus three (+3) percentage points of optimum moisture content, and compacted to at least 95 % of the maximum dry density from TEX-113-E.

The secondary backfill placed above the primary backfill previously noted can consist of the excavated material that is placed in maximum loose lifts of 8 inches, moisture conditioned between minus one (-1) and plus three (+3) percentage points of optimum moisture content, and compacted to at least 95 percent of the maximum dry density from TEX-114-E.

To help avoid overstressing of drop structure walls, heavy compaction rollers and other earthwork equipment should <u>not</u> operate within 3 feet of the walls. That is, compaction within 3 feet of drop structure walls should be limited to hand-operated compactors such as vibratory plates and “Jumping Jack” compactors.

Excavations for the new drainage channels to be constructed beyond the discharge points of the outfall drop structures should be performed in accordance with CoSA Item 105 (Channel Excavation). Unsuitable materials such as topsoil, organic matter, and debris including trash should be removed from the planned work areas prior to fill placement. We recommend that the planned construction slopes be properly benched prior to fill placement. The site clays excavated from the drop structure excavations may be used as secondary backfill, provided the soils are free of debris and deleterious materials and are compacted in controlled lifts meeting the requirements given in this report. However, it will be necessary to limit the plasticity of the clay backfill depending on the final slope inclinations. As indicated previously, it was not within our work scope to evaluate global stability of reconstructed slopes. The clay backfill should be placed in maximum loose lifts of 8 inches, moisture conditioned between minus one (-1) and plus three (+3) percentage points of optimum moisture content, and compacted to a minimum of 95 percent of the maximum dry density from TEX-114-E.

Conformance testing during construction to assure quality control will be necessary for this process. The suitability of all fill materials should be approved by the Geotechnical Engineer.

Permanent Slopes, Site Drainage, and Erosion Protection

The existing outfall structures are presently located within the upper portion of existing slopes. We understand that the existing outfall structures will be removed and areas where erosion has occurred will be filled in an engineering manner. The slopes will be re-vegetated and stone riprap will be placed in the drainage channels where water will discharge from the drop structure piping. Selection of the stone riprap for erosion control is being performed by FNI.

The permanent slopes of the proposed drainage channel are planned to be inclined no steeper than 3H:1V. Global stability analyses were not within the scope of work for this study; however, Arias can provide this service if requested at an additional fee.

It has been our experience that the clay soils that occur at the 3 sites, may be subject to shallow sloughing due to the drying and wetting of the soils over climatic cycles. This cyclical drying and wetting will result in softening of the soils over time; i.e. a decrease in the soil drained shear strength. The upper soils also included granular fill materials (i.e. clayey gravel with sand and/or silty gravel with sand) that may transmit “perched” groundwater during climatic wet periods. Localized slope areas may slough during or after construction if a perched groundwater condition is present. Thus, some future slope maintenance and repairs should be planned for.

The favorable performance of any structure is dependent on adequate internal drainage, as well as positive site surface drainage. Careful consideration should be provided by the designers and contractor to maintain adequate internal drainage and positive surface drainage of all storm waters away from the planned improvements both during and after construction.

Shallow sloughing of the slopes can be expected over time that will require routine maintenance. We recommend that a periodic maintenance schedule be developed to confirm that the erosion and scour protection systems are performing as designed. Deficiencies and flood damage should be corrected and repaired as needed. Routine damage assessments should be completed after significant storm events to identify and correct potential problems as soon as possible.

The performance of the flood control system will be directly related to the control of erosion; thus, protection against scour should be provided. We understand that stone riprap will be provided in the new drainage channels where storm water will be discharged from the piping, and the adjacent slopes will be vegetated. Care should be taken to provide adequate anchorage for the erosion control materials. Actual measures for erosion and scour control should be determined by FNI.

EXCAVATIONS, TEMPORARY BRACING, AND GROUNDWATER CONTROL

It should be noted that heavy-duty excavating equipment capable of excavating dense granular soils and hard to very hard clay and/or partially-cemented marl. We recommend that the Contractor be experienced with constructing similar projects in this area. Heavy-duty excavation equipment is defined as equipment capable of cutting/excavating dense granular soils and hard to very hard clay and/or partially-cemented (rock-like) marl.

Trenching, Shoring, and OSHA Classifications

Trenching and shoring should be performed in accordance with the requirements given in CoSA Item 550 (Trench Excavation Safety Protection) and Item 551 (Special Shoring), and the Occupational Safety and Health Administration (OSHA) Standards 29 CFR, Part 1926, Subpart P. The regulations provide options for the design of sloped and benched excavations and for vertical trench excavations. The Contractor should be aware that slope height, slope inclination, and/or excavation depths should in no case exceed those specified in local, state, or federal safety regulations, e.g., OSHA Health and Safety Standards for Excavations, 29 CFR Part 1926, or successor regulations. Such regulations are strictly enforced and, if they are not followed, the Owner, Contractor, and/or earthwork and utility subcontractors could be liable for substantial penalties.

The soils encountered at this site were classified as to type in accordance with this publication, and are shown subsequently in Table 7 for the soils encountered at Borings B-1 and B-2 drilled at the proposed SAIA No. 5 and No. 7 drop structures, respectively, and in Table 8 for the conditions encountered at Boring B-3 drilled at Stinson No. 1.

Table 7: OSHA Soil Classifications at Boring B-1 (SAIA No. 5) & B-2 (SAIA No. 7)

Stratum	Description	OSHA Classification
FILL	FILL: Medium Dense CLAYEY GRAVEL with Sand (GC) or Stiff FAT CLAY (CH)	C
FILL	FILL: Dense SILTY GRAVEL with Sand (GM)	C
I	Very Stiff to Hard FAT and/or LEAN CLAY with Sand (CH and/or CL)	B
II	Very Hard MARL with Sand	B

****It must be noted that layered slopes cannot be steeper at the top than the underlying slope and that all materials below the water table must be classified as Type "C" soils. The OSHA publication should be referenced for layered soil conditions, benching, etc.**

Table 8: OSHA Soil Classifications at Boring B-3 (Stinson No. 1)

Stratum	Description	OSHA Classification
FILL	FILL: Stiff FAT CLAY (CH)	B
I	Stiff to Hard SANDY LEAN CLAY (CL)	B
II	Very Stiff to Very Hard FAT CLAY (CH)	B

For excavations less than 20 feet deep, the maximum allowable slope for Type "C" soils is

1.5H:1V (34°), for Type "B" soils is 1H:1V (45°) and for Type "A" soils is ¾H:1V (53°). It should be noted that the table and allowable slopes above are for temporary slopes.

Appropriate trench excavation methods and safety design will depend on the soil and groundwater conditions encountered during construction. We emphasize that differing soil conditions may be present at locations and depths than disclosed by the borings. Undisclosed material may be less stable than the soils encountered in our borings and/or groundwater may be present. Such differing conditions could lead to excavation instability. Consequently, flatter slopes, additional shoring/bracing, and/or dewatering techniques may be required in these areas.

The soils to be penetrated by excavations may vary significantly across the site. Our soil classification is based solely on the materials encountered in the exploratory test borings. The Contractor should verify that similar conditions exist throughout the proposed area of excavation. If different subsurface conditions are encountered at the time of construction, we recommend that Arias be contacted immediately in writing to evaluate the conditions encountered.

Trenches less than 5 feet deep are generally not required to be sloped back or braced following federal OSHA requirements for excavations. Sides of temporarily vertical excavations less than 5 feet deep may stay open for short periods of time; however, the soils that will be encountered in trench excavations are subject to random caving and sloughing. If side slopes begin to slough, the sides should be either braced or be sloped back flatter as necessary.

Regardless of excavation depth, we recommend that all vehicles and material stockpiles be located away from the excavation at a distance equal to or preferably greater than the trench vertical height. The trench safety design should consider the impacts of surcharge loads that may result from the presence of material stockpiles, equipment traffic, and other loadings in close proximity to the trench. It is also important to consider any vibratory loads such as heavy truck traffic.

OSHA requires that the excavations be carefully monitored by a competent person making daily construction inspections. These inspections are required to verify that the excavations are constructed in accordance with the intent of OSHA regulations and the trench safety design. If deeper excavations are necessary, or if actual soil conditions vary from the borings, the trench safety design should be reviewed and revisions should be made to the design as needed based on encountered conditions. The effects of changed weather conditions, surcharge loadings, and cuts into adjacent backfills of existing utilities are critical items that should be evaluated by the inspector. The flow of water into the base and sides of the excavation and the presence of any surface slope cracks should also be carefully monitored by the Trench Safety Engineer.

The bottoms of trench excavations should expose strong competent soils, and should be dry and free of loose, soft, or disturbed soil. If fill soils are encountered at the base of trench excavations, their competency should be verified through probing and density testing. Soft, wet, weak, or deleterious materials should be over-excavated to expose strong competent soils.

Excavation depths are expected to range from about 16 to 26 feet below the existing surface. All excavation and shoring activities should follow applicable OSHA requirements. This includes requirements for excavations 20 feet or deeper which must be evaluated and designed by a profession engineer licensed/registered in Texas.

Lateral Earth Pressures – Temporary Excavation Bracing

The soil parameters given subsequently in Tables 9 and 10 can be used for determining lateral earth pressures for the design of excavation bracing systems at drop structures SAIA No. 5 (Boring B-1) and SAIA No. 7 (Boring B-2), respectively:

Table 9: Temporary Excavation Bracing - Parameters for Short Term Conditions at Boring B-1 (SAIA No. 5) and B-2 (SAIA No. 7)

Stratum	Description	γ_e	C	Φ
FILL	FILL: Medium Dense CLAYEY GRAVEL with Sand (GC) or Stiff FAT CLAY (CH)	120	0	20
FILL	FILL: Dense SILTY GRAVEL with Sand (GM)	125	0	32
I	Very Stiff to Hard FAT to LEAN CLAY with Sand (CH to CL)	125	3,000	0
II	Very Hard MARL with Sand	130	8,000	0

where: γ_e = effective soil unit weight, pcf
C = undrained soil shear strength, psf
Φ = angle of internal friction, deg.

Table 10: Temporary Excavation Bracing - Parameters for Short Term Conditions at Boring B-3 (Stinson No. 1)

Stratum	Description	γ_e	C	Φ
FILL	FILL: Stiff FAT CLAY (CH)	120	1,500	0
II	Very Stiff to Very Hard FAT CLAY (CH)	125	2,500	0

where: γ_e = effective soil unit weight, pcf
C = undrained soil shear strength, psf
Φ = angle of internal friction, deg.

Any surcharge loads including equipment loads, soil stockpiles and hydrostatic pressures should be considered when determining design lateral pressures for the design of temporary bracing.

Groundwater Control

Groundwater levels should be verified immediately prior to construction by the Contractor. Pockets or seams of calcareous deposits, gravel, sand, silt or open fractures and joints can store and transmit "perched" groundwater flow or seepage. "Perched" groundwater flow or seepage may also occur in sand and gravel materials and at sand/gravel strata interfaces with clay. If groundwater is present at the time of construction, it could take the form of seepage into the excavations from: (1) the permeable granular layers; and/or (2) granular material that could have been used to backfill the existing outlet structures.

Given the potential for multiple sources of perched groundwater seepage into the excavations, it may be difficult to effectively dewater the granular soils prior to excavating. Consideration can be given to sloping the bottom of the excavations to construction sumps so that the water can be pumped out as the excavations proceed. Dewatering is considered "Means and Methods" and is the sole responsibility of the Contractor.

Earthwork and Foundation Acceptance

Exposure to the environment may weaken the soils within slopes and at the foundation bearing levels if the excavations remain open for long periods of time. Therefore, it is recommended that all embankments be constructed and foundation excavations be extended to final grade and backfilled as soon as possible to reduce potential damage to embankment fill, backfill, and bearing soils. If fill materials or bearing soils are exposed to severe drying or wetting, the unsuitable soils must be re-conditioned or removed as appropriate, prior to completing slope filling operations or beginning the construction of the outfall drop structures or other foundations. The structure, foundation, and pipe bearing level should be free of loose soil, ponded water or debris and should be observed prior to placing fills by the Geotechnical Engineer or his representative.

Foundations, drop structures, and pipes should not be placed on soils that have been disturbed by rainfall or seepage. If the bearing soils are softened by surface water intrusion during exposure or by desiccation, the unsuitable soils must be removed from the excavation and replaced with compacted select fill or flowable fill.

Excavations and Trenches

Excavations for drop structures, foundations, and pipes should not be left open for long periods of time in order to reduce soil moisture changes. Bearing surfaces should be clean and free of loose soil and debris, and thus, should be observed and documented by one of our representatives prior to beginning construction. If bearing soils are exposed to severe drying or wetting, the unsuitable soil must be re-conditioned or removed as appropriate, prior to beginning construction of these structures.

Excavations should comply with local, state, and federal OSHA safety regulations as previously discussed in the subsection entitled "Excavations, Temporary Bracing, and Groundwater Control."

Construction Site Drainage

We recommend that areas around outfall drop structures should be properly maintained to allow for positive drainage as construction proceeds and to keep water from ponding adjacent to trench excavations, slopes, and embankments. This consideration should be included in the project specifications.

Flowable Fill

Flowable fill can be used as an alternate to soil backfill for the proposed drop structures. Although flowable fill does not require compaction in lifts, it should meet the requirements in CoSA Item 413 Flowable Backfill. If necessary, the level of flowable fill should be controlled until it hardens so that the drop structure manholes and pipes are not overstressed.

Expansive Soil Considerations

The site soils have moderate to high expansion characteristics. Expansive clays shrink when they lose water and swell or grow in volume when they gain water content. The potential of expansive clays to shrink and swell is related to the Plasticity Index (PI). Clays with a higher PI have a greater potential for soil volume changes due to moisture content variations. Change in soil moisture is the single most important factor affecting the shrinking and swelling of clays. The most pronounced movements are commonly observed when soils are exposed to extreme moisture fluctuations that occur between drought conditions and wet seasons.

We estimated potential vertical movement for this site using the Tex-124-E method outlined by the Texas Department of Transportation (TXDOT). The Tex-124-E method provides an

estimate of potential vertical rise (PVR) using the liquid limits, plasticity indices, and existing water contents for soils. The PVR is estimated in the seasonally active zone.

Estimated PVRs are based upon assumed changes in soil moisture content from a dry to a wet condition; however, soil movements in the field depend on the actual changes in moisture content. Thus, actual soil movements could be less than that calculated if little soil moisture variations occur or the actual movement could exceed the estimated values if actual soil moisture content changes exceed the assumed dry and wet limits outlined by the PVR method. Such moisture conditions that exceed the limits of the PVR method may be the result of extended droughts, flooding, perched groundwater infiltration, poor surface drainage, and/or leaking irrigation lines.

Using the TXDOT method, we estimate that the PVR ranges from about 1 inch at the SAIA No. 5 drop location, about 3 inches at the SAIA No. 7 location, and 5 inches at the Stinson No. 1 location.

CONSTRUCTION CRITERIA

Site Preparation

Any loose or soft soils should be undercut in the base of the drop structure (manhole and pipe) excavations, and from the adjacent slopes, which should be properly benched and keyed prior to fill placement as previously noted. The resulting subgrade should be proof rolled prior to fill placement. Any areas experiencing rutting or pumping should be undercut to stable material, and then backfilled in controlled lifts and compacted to the requirements given in the next section of this report.

Fill Requirements

The general fill used to reconstruct slopes can consist of the excavated soils free organic matter and deleterious materials. The general fill should be placed in accordance with CoSA Item 107, “Embankment.” The compaction should be performed in accordance with the “Density Control” method. Onsite material may be used provided it is placed in maximum 8-inch loose lifts and compacted to at least 95 percent of the standard Proctor maximum dry density as evaluated by TEX-114-E to minus one (-1) to plus three (+3) percent of optimum moisture (PI>35). This fill should not have any organics or deleterious materials. When fill material includes rock, the maximum rock size acceptable shall be 3-inches. No large rocks (>3 inches) shall be allowed to nest and all voids must be carefully filled with small stones or earth and properly compacted.

The suitability of all fill materials should be approved by the Geotechnical Engineer. Conformance testing during construction to monitor quality will be necessary for this process.

GENERAL COMMENTS

This report was prepared as an instrument of service for this project exclusively for the use of Freese and Nichols, Inc. and the project design team. If the development plans change relative to layout, anticipated traffic loads, or if different subsurface conditions are encountered during construction, we should be informed and retained to ascertain the impact of these changes on our recommendations. We cannot be responsible for the potential impact of these changes if we are not informed. Important information about this geotechnical report is provided in the ASFE publication included in Appendix E.

Geotechnical Design Review

Arias should be given the opportunity to review the design and construction documents. The purpose of this review is to check to see if our geotechnical recommendations are properly interpreted into the project plans and specifications. Please note that design review was not included in the authorized scope and additional fees may apply.

Subsurface Variations

Soil and groundwater conditions may vary between the sample boring locations. Transition boundaries or contacts, noted on the boring logs to separate soil types, are approximate. Actual contacts may be gradual and vary at different locations. The Contractor should verify that similar conditions exist throughout the proposed area of excavation. If different subsurface conditions or highly variable subsurface conditions are encountered during construction, we should be contacted to evaluate the significance of the changed conditions relative to our recommendations.

Quality Assurance Testing

The long-term success of the project will be affected by the quality of materials used for construction and the adherence of the construction to the project plans and specifications. As Geotechnical Engineer of Record (GER), we should be engaged by the Owner to provide Quality Assurance (QA) testing. Our services will be to evaluate the degree to which constructors are achieving the specified conditions they're contractually obligated to achieve, and observe that the encountered materials during earthwork for foundation installation are consistent with those encountered during this study. In the event that Arias is not retained to provide QA testing, we should be immediately contacted if differing subsurface conditions are encountered during construction. Differing materials may require modification to the recommendations that we provided herein. A message to the Owner with regard to the project QA is provided in the ASFE publication included in Appendix F.

Arias has an established in-house laboratory that meets the standards of the American Standard Testing Materials (ASTM) specifications of ASTM E-329 defining requirements for Inspection and Testing Agencies for soil, concrete, steel and bituminous materials as used in construction. We maintain soils, concrete, asphalt, and aggregate testing equipment to

provide the testing needs required by the project specifications. All of our equipment is calibrated by an independent testing agency in accordance with the National Bureau of Standards. In addition, Arias is accredited by the American Association of State Highway & Transportation Officials (AASHTO), the United States Army Corps of Engineers (USACE) and the Texas Department of Transportation (TxDOT), and also maintains AASHTO Materials Reference Laboratory (AMRL) and Cement and Concrete Reference Laboratory (CCRL) proficiency sampling, assessments and inspections.

Furthermore, Arias employs a technical staff certified through the following agencies: the National Institute for Certification in Engineering Technologies (NICET), the American Concrete Institute (ACI), the American Welding Society (AWS), the Precast/Prestressed Concrete Institute (PCI), the Mine & Safety Health Administration (MSHA), the Texas Asphalt Pavement Association (TXAPA) and the Texas Board of Professional Engineers (TBPE). Our services are conducted under the guidance and direction of a Professional Engineer (P.E.) licensed to work in the State of Texas, as required by law.

Subgrade preparation and fill placement operations should be observed and tested by the Geotechnical Engineer or his/her representative. As a guideline, at least one in-place density test should be performed according to the table below, with a minimum of 3 tests per lift. Any areas not meeting the required compaction should be recompacted and retested until compliance is met.

Standard of Care

Subject to the limitations inherent in the agreed scope of services as to the degree of care and amount of time and expenses to be incurred, and subject to any other limitations contained in the agreement for this work, Arias has performed its services consistent with that level of care and skill ordinarily exercised by other professional engineers practicing in the same locale and under similar circumstances at the time the services were performed.

APPENDIX A: FIGURES AND PHOTOGRAPHS

© 2014 by Arias & Associates, Inc.

ARIAS GEOPROFESSIONALS
142 Chula Vista, San Antonio, Texas 78232
Phone: (210) 308-5884 • Fax: (210) 308-5886

VICINITY MAP

Storm Water Outfall Drop Structures
San Antonio International Airport and Stinson Airport
San Antonio, Texas

Date: June 2, 2014	Job No.: 2013-845
Drawn By: TAS	Checked By: TJF
Approved By: SAH	Scale: N.T.S.

Figure 1

DISCLAIMER: This drawing is for illustration only and should not be used for design or construction purposes. All locations are approximate.

© 2014 by Arias & Associates, Inc.

ARIAS GEOPROFESSIONALS
142 Chula Vista, San Antonio, Texas 78232
Phone: (210) 308-5884 • Fax: (210) 308-5886

BORING LOCATION PLAN

Storm Water Outfall Drop Structures
San Antonio International Airport (#5 and #7)
San Antonio, Texas

Date: June 2, 2014	Job No.: 2013-845
Drawn By: TAS	Checked By: TJF
Approved By: SAH	Scale: N.T.S.

REVISIONS:

No.:	Date:	Description:

Figure 2

DISCLAIMER: This drawing is for illustration only and should not be used for design or construction purposes. All locations are approximate.

© 2014 by Arias & Associates, Inc.

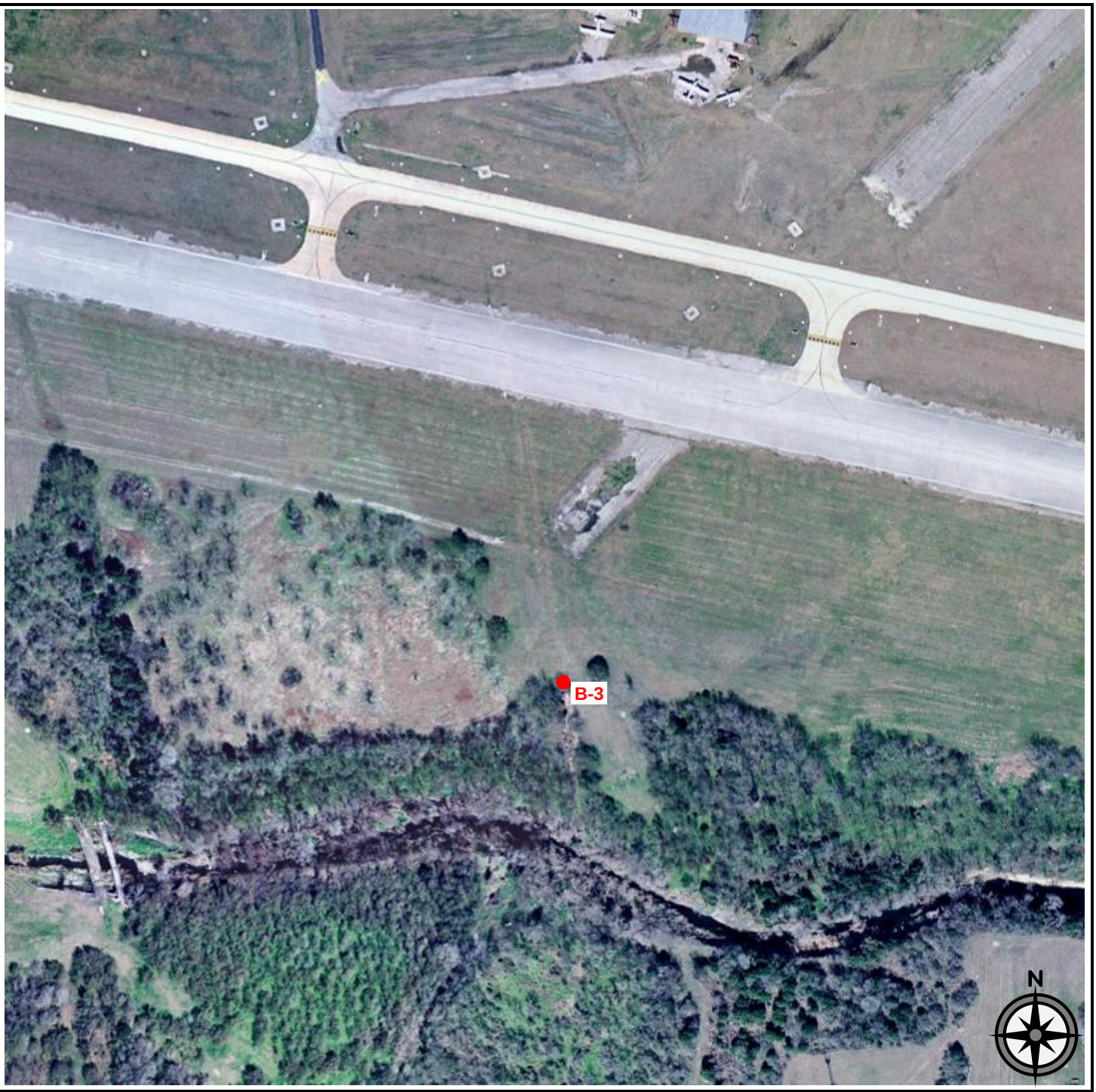

ARIAS GEOPROFESSIONALS
142 Chula Vista, San Antonio, Texas 78232
Phone: (210) 308-5884 • Fax: (210) 308-5886

BORING LOCATION PLAN

Storm Water Outfall Drop Structures
Stinson Airport (#1)
San Antonio, Texas

Date: June 2, 2014	Job No.: 2013-845
Drawn By: TAS	Checked By: TJF
Approved By: SAH	Scale: N.T.S.

REVISIONS:

No.:	Date:	Description:

Figure 2

DISCLAIMER: This drawing is for illustration only and should not be used for design or construction purposes. All locations are approximate.

© 2014 by Arias & Associates, Inc.

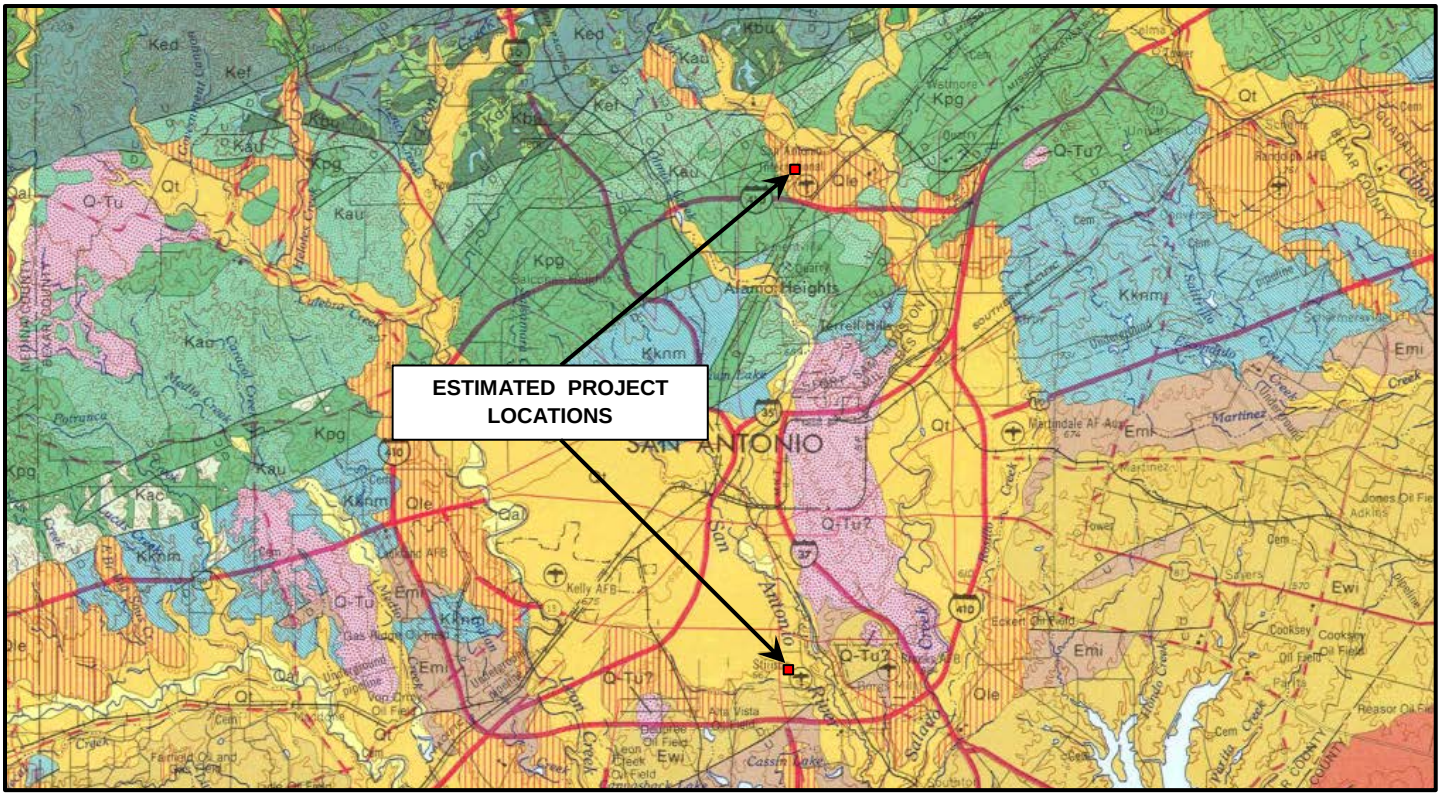

PORTION OF GEOLOGIC ATLAS OF TEXAS
(San Antonio Sheet)

N

LEGEND

Symbol	Name	Age
Qt	Fluviatile Terrace Deposits	Quaternary Period / Holocene
Qle	Leona Formation	Quaternary Period / Pleistocene
Q-Tu	Uvalde Gravel	Quaternary Period / Pleistocene
Ewi	Wilcox Group	Quaternary Period / Eocene
Emi	Midway Group	Quaternary Period / Eocene
Kknm	Navarro Formation	Upper Cretaceous Period
Kpg	Pecan Gap Chalk	Upper Cretaceous Period
Kau	Austin Chalk	Upper Cretaceous Period
Ked	Edwards Limestone undivided	Upper Cretaceous Period

U
D
Fault Segment with Indication of Relative Movement

ARIAS GEOPROFESSIONALS
142 Chula Vista, San Antonio, Texas 78232
Phone: (210) 308-5884 • Fax: (210) 308-5886

GEOLOGIC MAP

Storm Water Outfall Drop Structures
San Antonio International Airport and Stinson Airport
San Antonio, Texas

Date: June 2, 2014	Job No.: 2013-845
Drawn By: PPL	Checked By: TJF
Approved By: SAH	Scale: N.T.S.

Figure 3

DISCLAIMER: This drawing is for illustration only and should not be used for design or construction purposes. All locations are approximate.

© 2014 by Arias & Associates, Inc.

Photo 1 – View looking towards the west at the cleanup after the drilling operations of Boring B-1.

Photo 2 – View looking towards the north and outfall slope from the drilling operations of Boring B-2.

ARIAS GEOPROFESSIONALS
142 Chula Vista, San Antonio, Texas 78232
Phone: (210) 308-5884 • Fax: (210) 308-5886

SITE PHOTOS

Storm Water Outfall Drop Structures
San Antonio International Airport and Stinson Airport
San Antonio, Texas

Date: June 2, 2014	Job No.: 2013-845
Drawn By: TAS	Checked By: TJF
Approved By: SAH	Scale: N.T.S.

Appendix A

DISCLAIMER: This drawing is for illustration only and should not be used for design or construction purposes. All locations are approximate.

© 2014 by Arias & Associates, Inc.

Photo 3 – View looking towards the north from the existing drainage structure at the drilling operations of Boring B-3.

DISCLAIMER: This drawing is for illustration only and should not be used for design or construction purposes. All locations are approximate.

ARIAS GEOPROFESSIONALS
142 Chula Vista, San Antonio, Texas 78232
Phone: (210) 308-5884 • Fax: (210) 308-5886

SITE PHOTOS

Storm Water Outfall Drop Structures
San Antonio International Airport and Stinson Airport
San Antonio, Texas

Date: June 2, 2014	Job No.: 2013-845
Drawn By: TAS	Checked By: TJF
Approved By: SAH	Scale: N.T.S.

Appendix A

APPENDIX B: BORING LOGS AND KEY TO TERMS

Boring Log No. B-1

Project: **Storm Water Outfall Drop Structures**
San Antonio International Airport and Stinson Airport
San Antonio, Texas

Sampling Date: 5/22/14

Coordinates: N29°32'22.7" W98°28'8.9"

Location: SAIA #5: See Boring Location Plan

Backfill: Cuttings

Soil Description	Depth (ft)	SN	WC	PL	LL	PI	N	-200
FILL: CLAYEY GRAVEL with Sand (GC), medium dense, brown		SS	8	19	54	35	14	31
FILL: SILTY GRAVEL with Sand (GM), dense, light tan and light gray		SS	3				31	
	5	SS	3				32	
		SS	7				44	
LEAN CLAY with Sand (CL), hard, reddish brown, light gray and light tan	10	SS	14				34	
		SS	16	17	48	31	35	73
MARL with Sand, very hard, light tan and light gray; partially-cemented	15	SS	13				61	
	20	SS	11				**50/5"	
- light gray and light tan below 23.5 ft.	25	SS	12	18	50	32	50/3"	79
		SS	13				50/3"	

Borehole terminated at 29.3 feet

Groundwater Data:
During drilling: Not encountered
After After 8 days: At 12.7-ft depth (21.7-ft open borehole depth)

Field Drilling Data:
Logged By: R. Arizola
Driller: Accu Drilling
Equipment: Truck-mounted drill rig
Coordinates: Hand-held GPS Unit

Nomenclature Used on Boring Log

Split Spoon (SS)

Delayed water reading

WC = Water Content (%)
PL = Plastic Limit
LL = Liquid Limit
PI = Plasticity Index
N = SPT Blow Count

** = Blow Counts During Seating Penetration
-200 = % Passing #200 Sieve

Arias & Associates, Inc.

Job No.: 2013-845

Boring Log No. B-2

Project: **Storm Water Outfall Drop Structures**
San Antonio International Airport and Stinson Airport
San Antonio, Texas

Sampling Date: 5/22/14

Coordinates: N29°32'21.6" W98°28'2.3"

Location: SAIA #7: See Boring Location Plan

Backfill: Cuttings

Soil Description	Depth (ft)	SN	WC	PL	LL	PI	PP	N	-200
FILL: FAT CLAY (CH), stiff, brown		SS	7					11	
FILL: SILTY GRAVEL with Sand (GM), dense, light tan and light gray		SS	3					32	
FAT CLAY with Sand (CH), very stiff, reddish brown and light tan	5	SS	17					19	
- with calcareous nodules to 12 ft.		SS	15					27	
- hard below 7 ft.		T	16	17	50	33	7.25		81
	10	SS	16					39	
- reddish brown below 14 ft.	15	T	15				7.5		
		T	16	17	50	33	6.25		73
	20								
		T	14				7.0		
	25								
MARL with Sand, very hard, light tan and light gray; partially-cemented		SS	11	17	48	31		**50/5"	73
	30								
		SS	13					**50/6"	
Borehole terminated at 34 feet									

Groundwater Data:
During drilling: Not encountered
After After 8 days: At 24.3-ft depth (30.8-ft open borehole depth)

Field Drilling Data:
Logged By: R. Arizola
Driller: Accu Drilling
Equipment: Truck-mounted drill rig
Coordinates: Hand-held GPS Unit

Nomenclature Used on Boring Log

Split Spoon (SS)
Thin-walled tube (T)
Delayed water reading

WC = Water Content (%)
PL = Plastic Limit
LL = Liquid Limit
PI = Plasticity Index
PP = Pocket Penetrometer (tsf)

N = SPT Blow Count
** = Blow Counts During Seating Penetration
-200 = % Passing #200 Sieve

2013-845.GPJ 6/16/14 (BORING LOG SA10-01.ARIASSA10-01.GDT.LIBRARY2013-01.GLB)

Arias & Associates, Inc.

Job No.: 2013-845

Boring Log No. B-3

Project: **Storm Water Outfall Drop Structures**
San Antonio International Airport and Stinson Airport
San Antonio, Texas

Sampling Date: 5/22/14

Coordinates: N29°20'11.5" W98°28'36.6"

Location: Stinson #1: See Boring Location Plan

Backfill: Cuttings

Soil Description	Depth (ft)	SN	WC	PL	LL	PI	PP	N	-200	DD
FILL: FAT CLAY (CH), stiff, dark brown and light tan		SS	9					13		
SANDY LEAN CLAY (CL), stiff, dark brown										
- hard below 3 ft.		SS	9	19	45	26		29	67	
FAT CLAY (CH), hard to very hard, gray brown, with calcareous deposits	5	T	9				14+			
- light gray and tan below 6 ft.		SS	10					31		
	10	SS	11					43		
		SS	14					59		
	15	T	18	23	79	56	12.2		94	
FAT CLAY with Sand (CH), hard, tan and gray, with silt partings	20	T	20				8.2			96
- very stiff below 23 ft.		T	22	21	60	39	3.0		84	

Borehole terminated at 24.5 feet

Groundwater Data:
During drilling: Not encountered
After After 11 days: At 24-ft depth (24.2-ft open borehole depth)

Field Drilling Data:
Logged By: R. Arizola
Driller: Accu Drilling
Equipment: Truck-mounted drill rig
Coordinates: Hand-held GPS Unit

Nomenclature Used on Boring Log

Split Spoon (SS)
Thin-walled tube (T)
Delayed water reading

WC = Water Content (%)
PL = Plastic Limit
LL = Liquid Limit
PI = Plasticity Index
PP = Pocket Penetrometer (tsf)
N = SPT Blow Count
-200 = % Passing #200 Sieve
DD = Dry Density (pcf)
Uc = Compressive Strength (tsf)

2013-845.GPJ 6/16/14 (BORING LOG SA10-01.ARIASSA10-01.GDT.LIBRARY2013-01.GLB)

Arias & Associates, Inc.

Job No.: 2013-845

KEY TO TERMS AND SYMBOLS USED ON BORING LOGS

MAJOR DIVISIONS					GROUP SYMBOLS	DESCRIPTIONS
COARSE-GRAIND SOILS	More than half of material LARGER than No. 200 Sieve size	GRAVELS	More than Half of Coarse fraction is LARGER than No. 4 Sieve size	Clean Gravels (little or no Fines)	GW	Well-Graded Gravels, Gravel-Sand Mixtures, Little or no Fines
					GP	Poorly-Graded Gravels, Gravel-Sand Mixtures, Little or no Fines
				Gravels with Fines (Appreciable amount of Fines)	GM	Silty Gravels, Gravel-Sand-Silt Mixtures
					GC	Clayey Gravels, Gravel-Sand-Clay Mixtures
		SANDS	More than half of Coarse fraction is SMALLER than No. 4 Sieve size	Clean Sands (little or no Fines)	SW	Well-Graded Sands, Gravelly Sands, Little or no Fines
					SP	Poorly-Graded Sands, Gravelly Sands, Little or no Fines
				Sands with Fines (Appreciable amount of Fines)	SM	Silty Sands, Sand-Silt Mixtures
					SC	Clayey Sands, Sand-Clay Mixtures
GINE-GRAIND SOILS	More than half of material SMALLER than No. 200 Sieve size	SILTS & CLAYS		Liquid Limit less than 50	ML	Inorganic Silts & Very Fine Sands, Rock Flour, Silty or Clayey Fine Sands or Clayey Silts with Slight Plasticity
					CL	Inorganic Clays of Low to Medium Plasticity, Gravelly Clays, Sandy Clays, Silty Clays, Lean Clays
		SILTS & CLAYS		Liquid Limit greater than 50	MH	Inorganic Silts, Micaceous or Diatomaceous Fine Sand or Silty Soils, Elastic Silts
					CH	Inorganic Clays of High Plasticity, Fat Clays
FORMATIONAL MATERIALS		SANDSTONE				Massive Sandstones, Sandstones with Gravel Clasts
		MARLSTONE				Indurated Argillaceous Limestones
		LIMESTONE				Massive or Weakly Bedded Limestones
		CLAYSTONE				Mudstone or Massive Claystones
		CHALK				Massive or Poorly Bedded Chalk Deposits
		MARINE CLAYS				Cretaceous Clay Deposits
		GROUNDWATER				Indicates Final Observed Groundwater Level Indicates Initial Observed Groundwater Location

Density of Granular Soils	
Number of Blows per ft., N	Relative Density
0 - 4	Very Loose
4 - 10	Loose
10 - 30	Medium
30 - 50	Dense
Over 50	Very Dense

Consistency and Strength of Cohesive Soils		
Number of Blows per ft., N	Consistency	Unconfined Compressive Strength, q_u (tsf)
Below 2	Very Soft	Less than 0.25
2 - 4	Soft	0.25 - 0.5
4 - 8	Medium (Firm)	0.5 - 1.0
8 - 15	Stiff	1.0 - 2.0
15 - 30	Very Stiff	2.0 - 4.0
Over 30	Hard	Over 4.0

PLASTICITY CHART (ASTM D 2487-11)

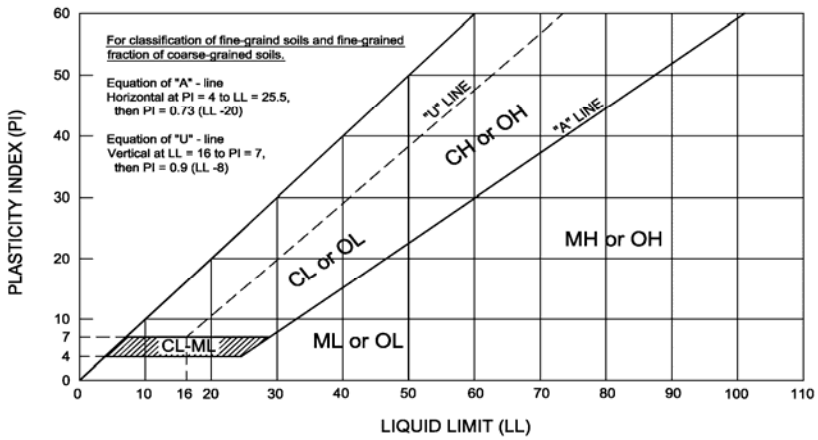

KEY TO TERMS AND SYMBOLS USED ON BORING LOGS

TABLE 1 Soil Classification Chart (ASTM D 2487-11)

Criteria of Assigning Group Symbols and Group Names Using Laboratory Tests[A]				Soil Classification	
				Group Symbol	Group Name[B]
COARSE-GRAIND SOILS	Gravels (More than 50% of coarse fraction retained on No. 4 sieve)	Clean Gravels (Less than 5% fines[C])	Cu ≥ 4 and 1 ≤ Cc ≤ 3[D]	GW	Well-Graded Gravel[E]
			Cu < 4 and/or [Cc < or Cc > 3][D]	GP	Poorly-Graded Gravel[E]
		Gravels with Fines (More than 12% fines[C])	Fines classify as ML or MH	GM	Silty Gravel[E,F,G]
			Fines classify as CL or CH	GC	Clayey Gravel[E,F,G]
More than 50% retained on No. 200 sieve	Sands (50% or more of coarse fraction passes No. 4 sieve)	Clean Sands (Less than 5% fines[H])	Cu ≥ 6 and 1 ≤ Cc ≤ 3[D]	SW	Well-Graded Sand[I]
			Cu < 6 and/or [Cc < or Cc > 3][D]	SP	Poorly-Graded Sand[I]
		Sands with Fines (More than 12% fines[H])	Fines classify as ML or MH	SM	Silty Sand[F,G,I]
			Fines classify as CL or CH	SC	Clayey Sand[F,G,I]
FINE-GRAINED SOILS	Silts and Clays	inorganic	PI > 7 and plots on or above "A" line[J]	CL	Lean Clay[K,L,M]
	Liquid limit less than 50		PI < 4 or plots below "A" line[J]	ML	Silt[K,L,M]
		organic	Liquid limit - oven dried / Liquid & #10 < 0.75	OL	Organic Clay[K,L,M,N] / Organi Silt[K,L,M,O]
50% or more passes the No. 200 sieve	Silts and Clays	inorganic	PI plots on or above "A" line	CH	Fat Clay[K,L,M]
	Liquid limit 50 or more		PI plots on or above "A" line	MH	Elastic Silt[K,L,M]
		organic	Liquid limit - oven dried / Liquid & #10 < 0.75	OH	Organic Clay[K,L,M,P] / Organic Silt[K,L,M,Q]
HIGHLY ORGANIC SOILS	Primarily organic matter, dark in color, and organic odor			PT	Peat

[A] Based on the material passing the 3-inch (75mm) sieve
[B] If field sample contained cobbles or boulders, or both, add "with bcobble sor boulders, or both" to group name
[C] Gravels with 5% to 12% fines require dual symbols:
- GW-GM well-graded gravel with silt
- GW-GC well-graded gravel with clay
- GP-GM poorly-graded gravel with silt
- GP-GC poorly-graded gravel with clay

[D] $Cu = D_{60}/D_{10}$ $\quad Cc = \dfrac{(D_{30})^2}{D_{10} \times D_{60}}$

[E] If soil contains ≥ 15% sand, add "with sand" to group name
[F] If fines classify as CL-ML, use dual symbol GC-GM, or SC-SM
[G] If fines are organic, add "with organic fines" to group name
[H] Sand with 5% to 12% fines require dual symbols:
- SW-SM well-graded sand with silt
- SW-SC well-graded sand with clay
- SP-SM poorly-graded sand with silt
- SP-SC poorly-graded sand with clay

[I] If soil contains ≥ 15% gravel, add "with gravel" to group name
[J] If Atterberg limits plot in hatched area, soil is a CL-ML, silty clay
[K] If soil contains 15% to < 30% plus No. 200, add "with sand" or "with gravel," whichever is predominant
[L] If soil contains ≥ 30% plus No. 200, predominantly sand, add "sandy" to group name
[M] If soil contains ≥ 30% plus No. 200, predominantly gravel, add "gravelly" to group name
[N] PI ≥ 4 and plots on or above "A" line
[O] PI < 4 or plots below "A" line
[P] PI plots on or above "A" line
[Q] PI plots below "A" line

TERMINOLOGY

Boulders	Over 12-inches (300mm)	**Parting**	Inclusion < 1/8-inch thick extending through samples
Cobbles	12-inches to 3-inches (300mm to 75mm)	**Seam**	Inclusion 1/8-inch to 3-inches thick extending through sample
Gravel	3-inches to No. 4 sieve (75mm to 4.75mm)	**Layer**	Inclusion > 3-inches thick extending through sample
Sand	No. 4 sieve to No. 200 sieve (4.75mm to 0.075mm)		
Silt or Clay	Passing No. 200 sieve (0.075mm)		
Calcareous	Containing appreciable quantities of calcium carbonate, generally nodular		

Stratified	Alternating layers of varying material or color with layers at least 6mm thick
Laminated	Alternating layers of varying material or color with the layers less than 6mm thick
Fissured	Breaks along definite planes of fracture with little resistance to fracturing
Slickensided	Fracture planes appear polished or glossy sometimes striated
Blocky	Cohesive soil that can be broken down into small angular lumps which resist further breakdown
Lensed	Inclusion of small pockets of different soils, such as small lenses of sand scattered through a mass of clay
Homogeneous	Same color and appearance throughout

APPENDIX C: FIELD AND LABORATORY EXPLORATION

FIELD AND LABORATORY EXPLORATION

The field exploration program included drilling at selected locations within the site and intermittently sampling the encountered materials. The boreholes were drilled using single flight auger (ASTM D 1452). Samples of encountered materials were obtained using a split-barrel sampler while performing the Standard Penetration Test (ASTM D 1586), or using a thin-walled tube sampler (ASTM D 1587). The sample depth interval and type of sampler used is included on the soil boring log. Arias' field representative visually logged each recovered sample and placed a portion of the recovered sampled into a plastic bag for transport to our laboratory.

SPT N values and blow counts for those intervals where the sampler could not be advanced for the required 18-inch penetration are shown on the soil boring log. If the test was terminated during the 6-inch seating interval or after 10 hammer blows were applied used and no advancement of the sampler was noted, the log denotes this condition as blow count during seating penetration. Penetrometer readings recorded for thin-walled tube samples that remained intact also are shown on the soil boring log.

Arias performed soil mechanics laboratory tests on selected samples to aid in soil classification and to determine engineering properties. Tests commonly used in geotechnical exploration, the method used to perform the test, and the column designation on the boring log where data are reported are summarized as follows:

Test Name	Test Method	Log Designation
Water (moisture) content of soil and rock by mass	ASTM D 2216	WC
Liquid limit, plastic limit, and plasticity index of soils	ASTM D 4318	PL, LL, PI
Amount of material in soils finer than the No. 200 sieve	ASTM D 1140	-200

The laboratory results are reported on the soil boring log.

APPENDIX D: GRAIN SIZE DISTRIBUTION CURVES

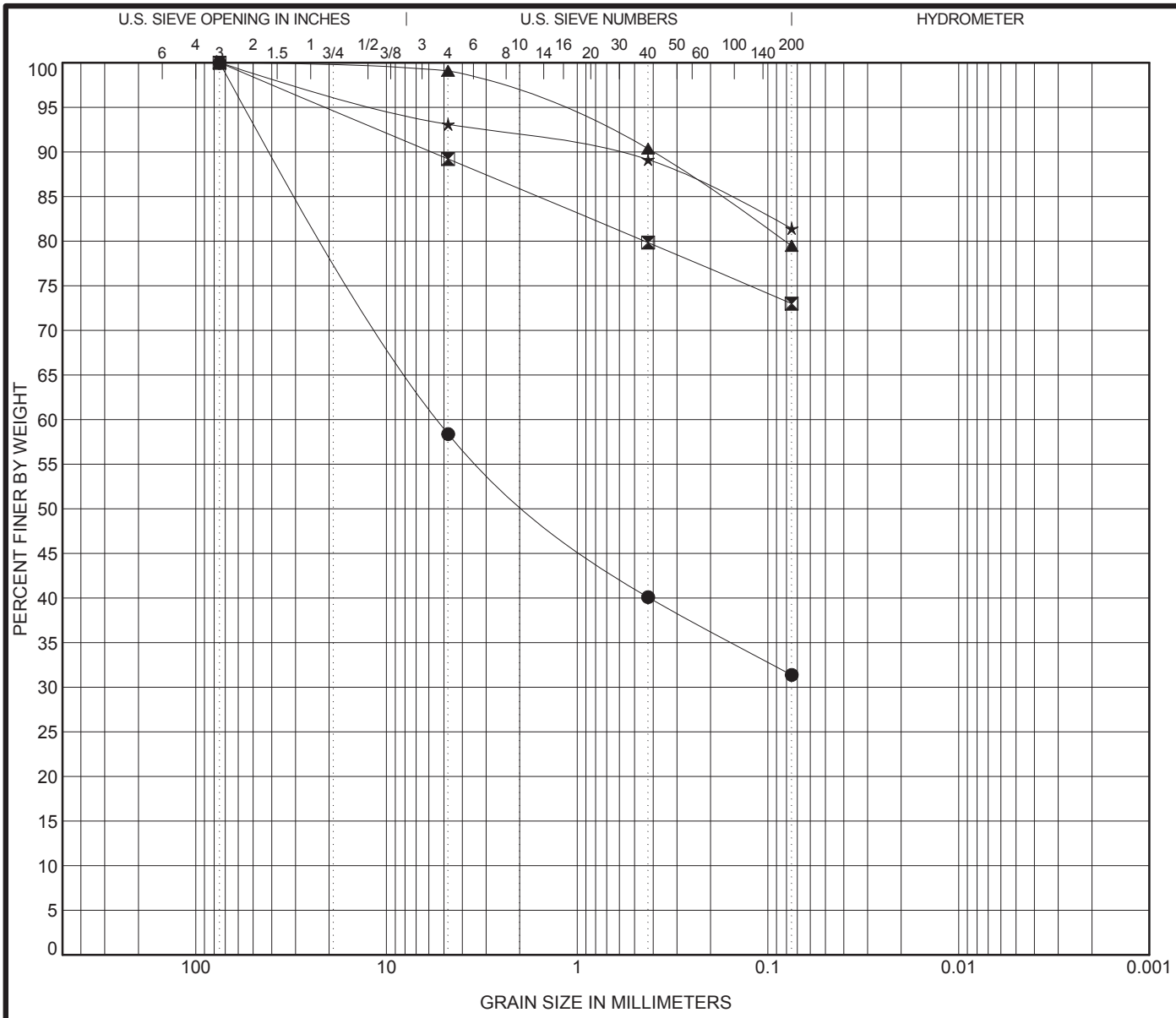

COBBLES	GRAVEL		SAND			SILT OR CLAY
	coarse	fine	coarse	medium	fine	

	Boring	Elev	Depth	Classification	LL	PL	PI	Cc	Cu
●	1		0.0	**CLAYEY GRAVEL with SAND (GC)**	54	19	35		
⧗	1		10.5	**LEAN CLAY with SAND (CL)**	48	17	31		
▲	1		23.5	**MARL with SAND**	50	18	32		
★	2		8.0	**FAT CLAY with SAND (CH)**	50	17	33		

	Boring	Depth	D100	D60	D30	D10	%Gravel	%Sand	%Silt	%Clay
●	1	0.0	75	5.289			41.6	27.0	31.4	
⧗	1	10.5	75				10.8	16.2	73.0	
▲	1	23.5	75				0.9	19.6	79.5	
★	2	8.0	75				6.9	11.7	81.4	

Silt and clay fractions were determined using 0.002 mm as the maximum particle size for clay.

142 Chula Vista
San Antonio, Texas 78232
Phone: (210) 308-5884
Fax: (210) 308-5886

GRAIN SIZE DISTRIBUTION

Project: Storm Water Outfall Drop Structures

Location: See Boring Location Plan - SAIA #7

Job No.: 2013-845

Arias & Associates, Inc.

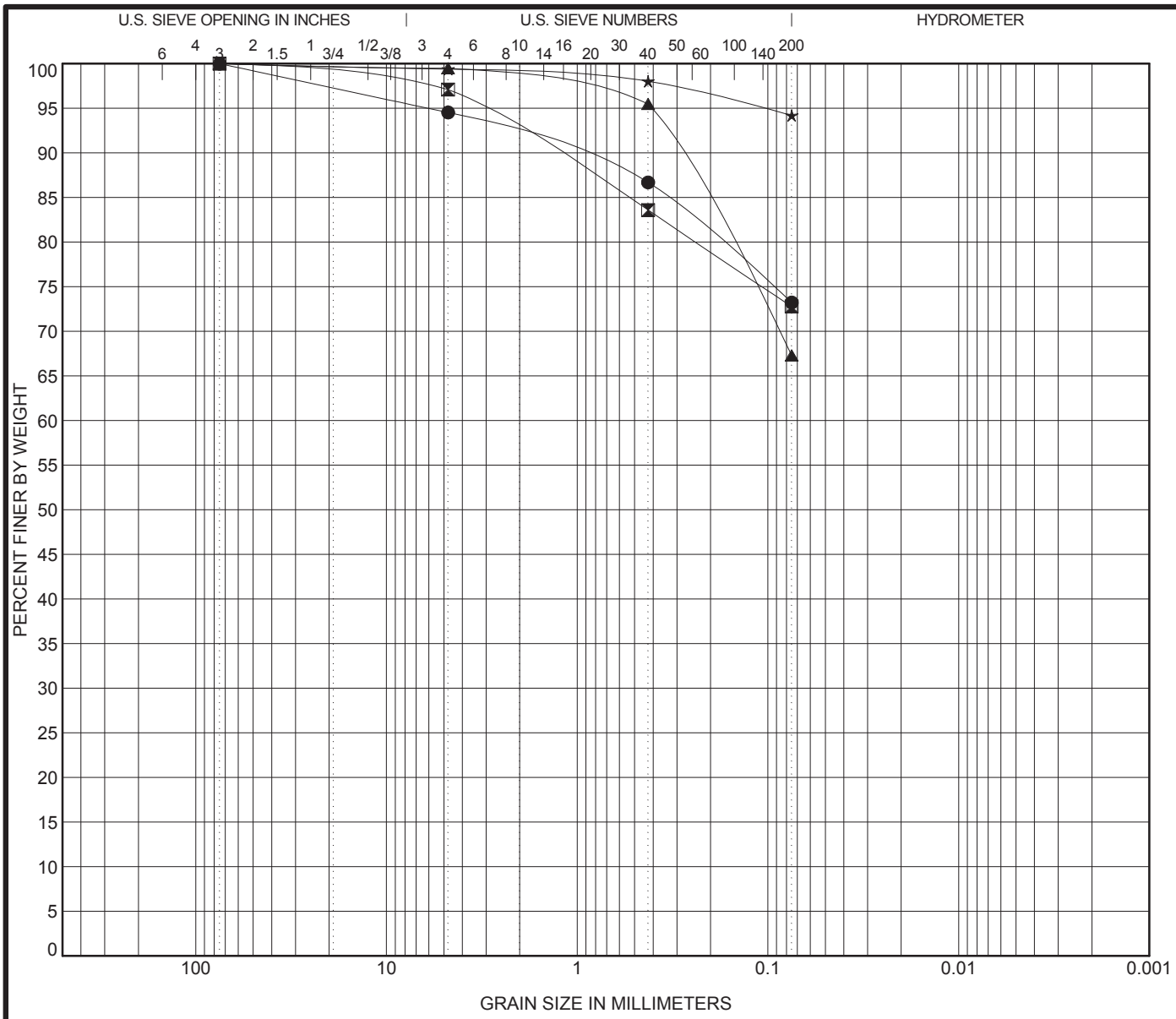

COBBLES	GRAVEL		SAND			SILT OR CLAY
	coarse	fine	coarse	medium	fine	

	Boring	Elev	Depth	Classification	LL	PL	PI	Cc	Cu
●	2		18.0	**FAT CLAY with SAND (CH)**	50	17	33		
⧗	2		28.5	**MARL with SAND**	48	17	31		
▲	3		2.5	**SANDY LEAN CLAY (CL)**	45	19	26		
★	3		14.0	**FAT CLAY (CH)**	79	23	56		

	Boring	Depth	D100	D60	D30	D10	%Gravel	%Sand	%Silt	%Clay
●	2	18.0	75				5.5	21.3	73.2	
⧗	2	28.5	75				2.9	24.3	72.8	
▲	3	2.5	75				0.5	32.2	67.3	
★	3	14.0	75				0.6	5.2	94.2	

Silt and clay fractions were determined using 0.002 mm as the maximum particle size for clay.

142 Chula Vista
San Antonio, Texas 78232
Phone: (210) 308-5884
Fax: (210) 308-5886

GRAIN SIZE DISTRIBUTION

Project: Storm Water Outfall Drop Structures

Location: See Boring Location Plan - Stinson #1

Job No.: 2013-845

Arias & Associates, Inc.

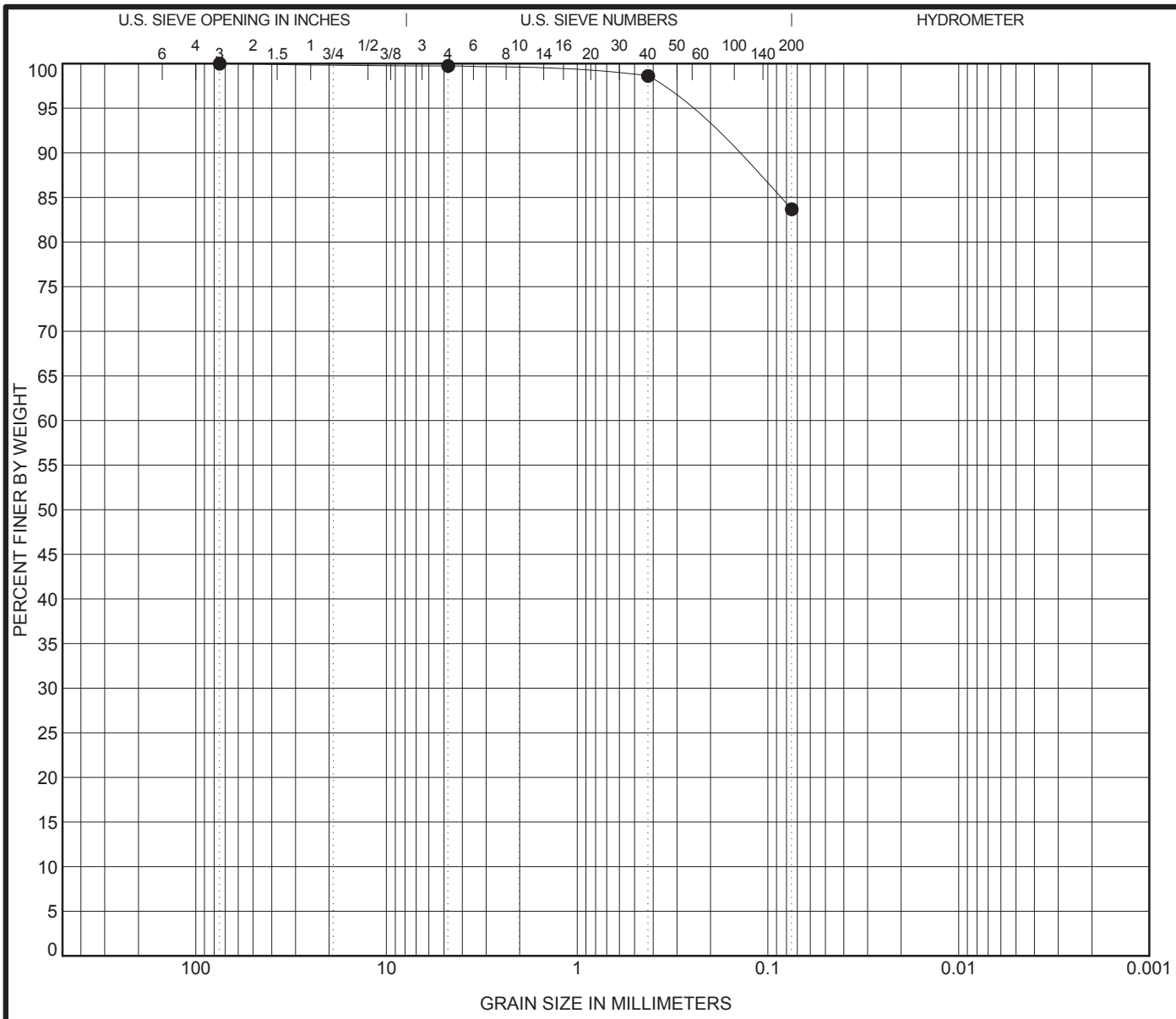

COBBLES	GRAVEL		SAND			SILT OR CLAY
	coarse	fine	coarse	medium	fine	

	Boring	Elev	Depth	Classification	LL	PL	PI	Cc	Cu
●	**3**		**23.0**	**FAT CLAY with SAND (CH)**	**60**	**21**	**39**		

	Boring	Depth	D100	D60	D30	D10	%Gravel	%Sand	%Silt	%Clay
●	**3**	**23.0**	**75**				**0.3**	**16.1**	**83.7**	

Silt and clay fractions were determined using 0.002 mm as the maximum particle size for clay.

142 Chula Vista
San Antonio, Texas 78232
Phone: (210) 308-5884
Fax: (210) 308-5886

GRAIN SIZE DISTRIBUTION

Project: Storm Water Outfall Drop Structures

Location: See Boring Location Plan - Stinson #1

Job No.: 2013-845

Arias & Associates, Inc.

APPENDIX E: ASFE INFORMATION – GEOTECHNICAL REPORT

Important Information about Your

Geotechnical Engineering Report

Subsurface problems are a principal cause of construction delays, cost overruns, claims, and disputes.

While you cannot eliminate all such risks, you can manage them. The following information is provided to help.

Geotechnical Services Are Performed for Specific Purposes, Persons, and Projects

Geotechnical engineers structure their services to meet the specific needs of their clients. A geotechnical engineering study conducted for a civil engineer may not fulfill the needs of a construction contractor or even another civil engineer. Because each geotechnical engineering study is unique, each geotechnical engineering report is unique, prepared *solely* for the client. No one except you should rely on your geotechnical engineering report without first conferring with the geotechnical engineer who prepared it. *And no one — not even you* — should apply the report for any purpose or project except the one originally contemplated.

Read the Full Report

Serious problems have occurred because those relying on a geotechnical engineering report did not read it all. Do not rely on an executive summary. Do not read selected elements only.

A Geotechnical Engineering Report Is Based on A Unique Set of Project-Specific Factors

Geotechnical engineers consider a number of unique, project-specific factors when establishing the scope of a study. Typical factors include: the client's goals, objectives, and risk management preferences; the general nature of the structure involved, its size, and configuration; the location of the structure on the site; and other planned or existing site improvements, such as access roads, parking lots, and underground utilities. Unless the geotechnical engineer who conducted the study specifically indicates otherwise, do not rely on a geotechnical engineering report that was:

- not prepared for you,
- not prepared for your project,
- not prepared for the specific site explored, or
- completed before important project changes were made.

Typical changes that can erode the reliability of an existing geotechnical engineering report include those that affect:

- the function of the proposed structure, as when it's changed from a parking garage to an office building, or from a light industrial plant to a refrigerated warehouse,
- elevation, configuration, location, orientation, or weight of the proposed structure,
- composition of the design team, or
- project ownership.

As a general rule, *always* inform your geotechnical engineer of project changes—even minor ones—and request an assessment of their impact. *Geotechnical engineers cannot accept responsibility or liability for problems that occur because their reports do not consider developments of which they were not informed.*

Subsurface Conditions Can Change

A geotechnical engineering report is based on conditions that existed at the time the study was performed. *Do not rely on a geotechnical engineering report* whose adequacy may have been affected by: the passage of time; by man-made events, such as construction on or adjacent to the site; or by natural events, such as floods, earthquakes, or groundwater fluctuations. *Always* contact the geotechnical engineer before applying the report to determine if it is still reliable. A minor amount of additional testing or analysis could prevent major problems.

Most Geotechnical Findings Are Professional Opinions

Site exploration identifies subsurface conditions only at those points where subsurface tests are conducted or samples are taken. Geotechnical engineers review field and laboratory data and then apply their professional judgment to render an opinion about subsurface conditions throughout the site. Actual subsurface conditions may differ—sometimes significantly—from those indicated in your report. Retaining the geotechnical engineer who developed your report to provide construction observation is the most effective method of managing the risks associated with unanticipated conditions.

A Report's Recommendations Are *Not* Final

Do not overrely on the construction recommendations included in your report. *Those recommendations are not final,* because geotechnical engineers develop them principally from judgment and opinion. Geotechnical engineers can finalize their recommendations only by observing actual

subsurface conditions revealed during construction. *The geotechnical engineer who developed your report cannot assume responsibility or liability for the report's recommendations if that engineer does not perform construction observation.*

A Geotechnical Engineering Report Is Subject to Misinterpretation

Other design team members' misinterpretation of geotechnical engineering reports has resulted in costly problems. Lower that risk by having your geotechnical engineer confer with appropriate members of the design team after submitting the report. Also retain your geotechnical engineer to review pertinent elements of the design team's plans and specifications. Contractors can also misinterpret a geotechnical engineering report. Reduce that risk by having your geotechnical engineer participate in prebid and preconstruction conferences, and by providing construction observation.

Do Not Redraw the Engineer's Logs

Geotechnical engineers prepare final boring and testing logs based upon their interpretation of field logs and laboratory data. To prevent errors or omissions, the logs included in a geotechnical engineering report should *never* be redrawn for inclusion in architectural or other design drawings. Only photographic or electronic reproduction is acceptable, *but recognize that separating logs from the report can elevate risk.*

Give Contractors a Complete Report and Guidance

Some owners and design professionals mistakenly believe they can make contractors liable for unanticipated subsurface conditions by limiting what they provide for bid preparation. To help prevent costly problems, give contractors the complete geotechnical engineering report, *but* preface it with a clearly written letter of transmittal. In that letter, advise contractors that the report was not prepared for purposes of bid development and that the report's accuracy is limited; encourage them to confer with the geotechnical engineer who prepared the report (a modest fee may be required) and/or to conduct additional study to obtain the specific types of information they need or prefer. A prebid conference can also be valuable. *Be sure contractors have sufficient time* to perform additional study. Only then might you be in a position to give contractors the best information available to you, while requiring them to at least share some of the financial responsibilities stemming from unanticipated conditions.

Read Responsibility Provisions Closely

Some clients, design professionals, and contractors do not recognize that geotechnical engineering is far less exact than other engineering disciplines. This lack of understanding has created unrealistic expectations that have led to disappointments, claims, and disputes. To help reduce the risk of such outcomes, geotechnical engineers commonly include a variety of explanatory provisions in their reports. Sometimes labeled "limitations" many of these provisions indicate where geotechnical engineers' responsibilities begin and end, to help others recognize their own responsibilities and risks. *Read these provisions closely.* Ask questions. Your geotechnical engineer should respond fully and frankly.

Geoenvironmental Concerns Are Not Covered

The equipment, techniques, and personnel used to perform a *geoenvironmental* study differ significantly from those used to perform a *geotechnical* study. For that reason, a geotechnical engineering report does not usually relate any geoenvironmental findings, conclusions, or recommendations; e.g., about the likelihood of encountering underground storage tanks or regulated contaminants. *Unanticipated environmental problems have led to numerous project failures.* If you have not yet obtained your own geoenvironmental information, ask your geotechnical consultant for risk management guidance. *Do not rely on an environmental report prepared for someone else.*

Obtain Professional Assistance To Deal with Mold

Diverse strategies can be applied during building design, construction, operation, and maintenance to prevent significant amounts of mold from growing on indoor surfaces. To be effective, all such strategies should be devised for the *express purpose* of mold prevention, integrated into a comprehensive plan, and executed with diligent oversight by a professional mold prevention consultant. Because just a small amount of water or moisture can lead to the development of severe mold infestations, a number of mold prevention strategies focus on keeping building surfaces dry. While groundwater, water infiltration, and similar issues may have been addressed as part of the geotechnical engineering study whose findings are conveyed in this report, the geotechnical engineer in charge of this project is not a mold prevention consultant; ***none of the services performed in connection with the geotechnical engineer's study were designed or conducted for the purpose of mold prevention. Proper implementation of the recommendations conveyed in this report will not of itself be sufficient to prevent mold from growing in or on the structure involved.***

Rely, on Your ASFE-Member Geotechncial Engineer for Additional Assistance

Membership in ASFE/The Best People on Earth exposes geotechnical engineers to a wide array of risk management techniques that can be of genuine benefit for everyone involved with a construction project. Confer with your ASFE-member geotechnical engineer for more information.

ASFE
The Best People on Earth

8811 Colesville Road/Suite G106, Silver Spring, MD 20910
Telephone: 301/565-2733 Facsimile: 301/589-2017
e-mail: info@asfe.org www.asfe.org

Copyright 2004 by ASFE, Inc. Duplication, reproduction, or copying of this document, in whole or in part, by any means whatsoever, is strictly prohibited, except with ASFE's specific written permission. Excerpting, quoting, or otherwise extracting wording from this document is permitted only with the express written permission of ASFE, and only for purposes of scholarly research or book review. Only members of ASFE may use this document as a complement to or as an element of a geotechnical engineering report. Any other firm, individual, or other entity that so uses this document without being an ASFE member could be commiting negligent or intentional (fraudulent) misrepresentation.

IIGER06085.0MRP

APPENDIX F: PROJECT QUALITY ASSURANCE

A Message to Owners

Construction materials engineering and testing (CoMET) consultants perform quality-assurance (QA) services to evaluate the degree to which constructors are achieving the specified conditions they're contractually obligated to achieve. Done right, QA can save you time and money; prevent unanticipated-conditions claims, change orders, and disputes; and reduce short-term and long-term risks, especially by detecting molehills before they grow into mountains.

Done right, QA can save you time and money; prevent claims and disputes; and reduce risks. Many owners don't do QA right because they follow bad advice.

Many owners don't do QA right because they follow bad advice; e.g., "CoMET consultants are all the same. They all have accredited facilities and certified personnel. Go with the low bidder." But there's no such thing as a standard QA scope of service, meaning that – to bid low – each interested firms *must* propose the cheapest QA service it can live with, jeopardizing service quality and aggravating risk for the entire project team. Besides, the advice is based on misinformation.

Fact: ***Most CoMET firms are not accredited***, and the quality of those that are varies significantly. Accreditation – which is important – nonetheless means that a facility met an accrediting body's minimum criteria. Some firms practice at a much higher level; others just barely scrape by. And what an accrediting body typically evaluates – management, staff, facilities, and equipment – can change substantially before the next review, two, three, or more years from now.

Most CoMET firms are not accredited. It's dangerous to assume CoMET personnel are certified.

Fact: ***It's dangerous to assume CoMET personnel are certified.*** Many have no credentials at all; some are certified by organizations of questionable merit, while others have a valid certification, but *not* for the services they're assigned.

Some CoMET firms – the "low-cost providers" – *want* you to believe that price is the only difference between QA providers. It's not, of course. Firms that sell low price typically lack the facilities, equipment, personnel, and insurance quality-oriented firms invest in to achieve the reliability concerned owners need to achieve quality in quality assurance.

ASFE THE GEOPROFESSIONAL BUSINESS ASSOCIATION
8811 Colesville Road
Suite G106
Silver Spring, Maryland 20910
Voice: 301.565.2733
Fax: 301.589.2017
E-mail: info@asfe.org
Internet: www.asfe.org

Firms that sell low price typically lack the facilities, equipment, personnel, and insurance quality-oriented firms invest in to achieve the reliability concerned owners need to achieve quality in quality assurance.

To derive maximum value from your investment in QA, require the CoMET firm's project manager to serve actively on the project team from beginning to end, a level of service that's relatively inexpensive and can pay huge dividends. During the project's planning and design stages, experienced CoMET professionals can help the design team develop uniform technical specifications and establish appropriate observation, testing, and instrumentation procedures and protocols. They can also analyze plans and specs much as constructors do, looking for the little errors, omissions, conflicts, and ambiguities that often become the basis for big extras and big claims. They can provide guidance about operations that need closer review than others, because of their criticality or potential for error or abuse. They can also relate their experience with the various constructors that have expressed interest in your project.

To derive maximum value, require the project manager to serve actively on the project team from beginning to end.

CoMET consultants' construction-phase QA services focus on two distinct issues: those that relate to geotechnical engineering and those that relate to the other elements of construction.

The geotechnical issues are critically important because they are essential to the "observational method" geotechnical engineers use to significantly reduce the amount of sampling they'd otherwise require. They apply the observational method by developing a sampling plan for a project, and then assigning field representatives to ensure samples are properly obtained, packaged, and transported. The engineers review the samples and, typically, have them tested in their own laboratories. They use the information they derive to characterize the site's subsurface and develop *preliminary* recommendations for the structure's foundations and for the specifications of various "geo" elements, like excavations, site grading, foundation-bearing grades, and roadway and parking-lot preparation and surfacing.

Geotechnical engineers cannot finalize their recommendations until they or their field representatives are on site to observe what's excavated to verify that the subsurface conditions the engineers predicted are those that actually exist.

When unanticipated conditions are observed, recommendations and/or specifications should be modified.

Responding to client requests, many geotechnical-engineering firms have expanded their field-services mix, so they're able to perform overall construction QA, encompassing – in addition to geotechnical issues – reinforced concrete, structural steel, welds, fireproofing, and so on. Unfortunately, that's caused some confusion. Believing that all CoMET consultants are alike, some owners take bids for the overall CoMET package, including the geotechnical field observation. *Entrusting geotechnical field observation to someone other than the geotechnical engineer of record (GER) creates a significant risk.*

Geotechnical engineers cannot finalize their recommendations until they are on site to verify that the subsurface conditions they predicted are those that actually exist. Entrusting geotechnical field observation to someone other than the geotechnical engineer of record (GER) creates a significant risk.

GERs have developed a variety of protocols to optimize the quality of their field-observation procedures. Quality-focused GERs meet with their field representatives before they leave for a project site, to brief them on what to look for and where, when, and how to look. (***No one can duplicate this briefing***, because no one else knows as much about a project's geotechnical issues.) And once they arrive at a project site, the field representatives know to maintain timely, effective communication with the GER, because that's what the GER has trained them to do. By contrast, it's extremely rare for a different firm's field personnel to contact the GER, even when they're concerned or confused about what they observe, because they regard the GER's firm as "the competition."

Divorcing the GER from geotechnical field operations is almost always penny-wise and pound-foolish. Still, because owners are given bad advice, it's commonly done, helping to explain why ***"geo" issues are the number-one source of construction-industry claims and disputes.***

Divorcing the GER from geotechnical field operations is almost always penny-wise and pound-foolish, helping to explain why "geo" issues are the number-one source of construction-industry claims and disputes.

To derive the biggest bang for the QA buck, identify three or even four quality-focused CoMET consultants. (If you don't know any, use the "Find a Geoprofessional" service available free at www.asfe.org.) Ask about the firms' ongoing and recent projects and the clients and client representatives involved; *insist upon receiving verification of all claimed accreditations, certifications, licenses, and insurance coverages.*

Insist upon receiving verification of all claimed accreditations, certifications, licenses, and insurance coverages.

Once you identify the two or three most qualified firms, meet with their representatives, preferably at their own facility, so you can inspect their laboratory, speak with management and technical staff, and form an opinion about the firm's capabilities and attitude.

Insist that each firm's designated project manager participate in the meeting. You will benefit when that individual is a seasoned QA professional familiar with construction's rough-and-tumble. Ask about others the firm will assign, too. There's no substitute for experienced personnel who are familiar with the codes and standards involved and know how to:

- read and interpret plans and specifications;
- perform the necessary observation, inspection, and testing;
- document their observations and findings;
- interact with constructors' personnel; and
- respond to the unexpected.

Important: Many of the services CoMET QA field representatives perform – like observing operations and outcomes – require the good judgment afforded by extensive training and experience, especially in situations where standard operating procedures do not apply. You need to know who will be exercising that judgment: a 15-year "veteran" or a rookie?

Many of the services CoMET QA field representatives perform require good judgment.

Also consider the tools CoMET personnel use. Some firms are passionate about proper calibration; others, less so. Passion is a good thing! Ask to see the firm's calibration records. If the firm doesn't have any, or if they are not current, be cautious. *You cannot trust test results derived using equipment that may be out of calibration.* Also ask a firm's representatives about their reporting practices, including report distribution, how they handle notifications of nonconformance, and how they resolve complaints.

Scope flexibility is needed to deal promptly with the unanticipated.

For financing purposes, some owners require the constructor to pay for CoMET services. ***Consider an alternative approach*** so you don't convert the constructor into the CoMET consultant's client. If it's essential for you to fund QA via the constructor, have the CoMET fee included as an allowance in the bid documents. This arrangement ensures that you remain the CoMET consultant's client, and it prevents the CoMET fee from becoming part of the constructor's bid-price competition. (Note that the International Building Code (IBC) *requires the owner to pay* for Special Inspection (SI) services commonly performed by the CoMET consultant as a service separate from QA, to help ensure the SI services' integrity. Because failure to comply could result in denial of an occupancy or use permit, having a contractual agreement that conforms to the IBC mandate is essential.)

If it's essential for you to fund QA via the constructor, have the CoMET fee included as an allowance in the bid documents. Note, too, that the International Building Code (IBC) requires the owner to pay for Special Inspection (SI) services.

CoMET consultants can usually quote their fees as unit fees, unit fees with estimated total (invoiced on a unit-fee basis), or lump-sum (invoiced on a percent-completion basis referenced to a schedule of values). No matter which method is used, estimated quantities need to be realistic. Some CoMET firms lower their total-fee estimates by using quantities they know are too low and then request change orders long before QA is complete.

Once you and the CoMET consultant settle on the scope of service and fee, enter into a written contract. Established CoMET firms have their own contracts; most owners sign them. Some owners prefer to use different contracts, but that can be a mistake when the contract was prepared for construction services. *Professional services are different.* Wholly avoidable problems occur when a contract includes provisions that don't apply to the services involved and fail to include those that do.

Some owners create wholly avoidable problems by using a contract prepared for construction services.

This final note: CoMET consultants perform QA for owners, not constructors. While constructors are commonly allowed to review QA reports as a *courtesy*, you need to make it clear that constructors do *not* have a legal right to rely on those reports; i.e., if constructors want to forgo their own observation and testing and rely on results derived from a scope created to meet *only* the needs of the owner, they *must do so at their own risk*. In all too many cases where owners have not made that clear, some constructors have alleged that they did have a legal right to rely on QA reports and, as a result, the CoMET consultant – not they – are responsible for their failure to deliver what they contractually promised to provide. The outcome can be delays and disputes that entangle you and all other principal project participants. Avoid that. Rely on a CoMET firm that possesses the resources and attitude needed to manage this and other risks as an element of a quality-focused service. Involve the firm early. Keep it engaged. And listen to what the CoMET consultant says. A good CoMET consultant can provide great value.

For more information, speak with your ASFE-Member CoMET consultant or contact ASFE directly.

ASFE THE GEOPROFESSIONAL BUSINESS ASSOCIATION

8811 Colesville Road
Suite G106
Silver Spring, Maryland 20910
Voice: 301.565.2733
Fax: 301.589.2017
E-mail: info@asfe.org
Internet: www.asfe.org