Please read the following instructions. If you have any questions, please contact the SMP Manager at (210) 207-3402 or the Environmental Stewardship Division at (210) 207-3862

- No soil originating on airport property shall leave the airport without SMP Manager approval.

- No soils other than those required by engineer's specifications and not available through the SAAS stockpile program shall be imported onto the airport without SMP Manager approval.

- All trucks using public roadways within airport property and transporting erodable materials such as soil, sand, gravel, rock, concrete chunks, etc. shall be in good condition and shall be in compliance with TXDOT rules and regulations.

- Soils disturbed by excavation or drilling shall be observed for visual and olfactory evidence of contamination. That means if you see or smell anything unusual, immediately contact the SMP Manager. If evidence of contamination is encountered through visual or olfactory senses or by required instrument screening, the contractor shall immediately notify the SMP Manager and then store the contaminated soil in a manner to protect from precipitation, generally by placing the soil on a layer of plastic and cover with a layer of plastic.

- Excess uncontaminated soils should not remain as soil piles on the project site any longer than necessary. Should there be a need to store excess soils on the project site, the location of any temporary stockpiles should be noted in the Storm Water Pollution Prevention Plan (SWPPP). Any stockpiles or areas not in use for a period of 21 days are to be stabilized by some means such as covering, surrounding by silt fence, hay logs and growth of grass to minimize erosion and sediment transport potential. "Clean" soil stockpiles are not to be contaminated in any way with construction debris, or spills of fuel, oil, solvents, chemicals or other waste materials.

- All clean excess soils shall be transported to a SAAS Soil Stockpile area. The stockpile area does not accept loads with trash, pipe pieces, rebar, concrete chunks or other types of construction debris. Rejected loads are the responsibility of the Project Manager to correct by removal of debris, etc. Small amounts of excess soil such as placing post holes may have an option to spread soil at the site as long as it is evenly and very thinly spread over a wide grassy area and is not in danger of washing into a nearby storm drain or body of water during a rain event. Soils segregated due to any evidence of contamination shall be managed in accordance with SAAS's Soil Management Plan.

- Entry to SAAS Stockpiles is controlled access only. Arrangement must be made with the SMP Manager for gate/stockpile site access. Other arrangements may be made to transport uncontaminated soil to other project sites or locations on the airport, but shall not be done without prior approval of the SMP Manager and

will be documented through the use of the SMP Manager Authorization Form.

- Any loads dumped by truck drivers either containing unwanted materials or debris, in an unapproved location or without the Project Manager's prior approval shall be the responsibility of the Project Manager to arrange for removal and/or mitigation.

Printed Name
Signature
Company
Date

SPECIAL CONDITIONS FOR CONSTRUCTION WITHIN THE AIR OPERATIONS AREA AT SAN ANTONIO INTERNATIONAL AIRPORT

San Antonio International Airport maintains operations 24 hours a day, 365 days per year for General Aviation and Air Carrier Service. Safety, Security and Operations will take precedence over all construction activities within the Airport Property. As such, all construction activity shall be conducted in accordance with the stipulations outlined below:

SECURITY

FINES

Any fines assessed to the Aviation Department due to the contractor's violations of any security requirements will be passed on to the contractor.

BADGING

Personnel working within the AOA must display current Airport issued identification at all times. The contractor shall be responsible for providing the necessary background checks for these personnel as well as maintaining personnel files for the project duration. These files are subject to FAA, TSA and Airport Police review. Subsequent to the pre-construction meeting, the contractor must arrange for all badged personnel to attend the SIDA class. Not all personnel must be badged.

It is permissible to have one (1) red-badge (with "E") personnel to escort and be responsible for up to two (2) unbadged persons. All unescorted equipment operators and drivers must be badged. SIDA classes are coordinated through Airport Police and take approximately two (2) hours. All badges remain the property of the Aviation Department and must be returned at the completion of the contract.

CONSTRUCTION ACCESS

The contractor will be issued ingress/egress into the AOA at a point designated by the Aviation Department, Airport Police. This point will be as close and practicable to the marshalling area as possible. The contractor will be required to enter into a security amendment, which shall be issued and kept, on file with Airport Police. It will be the contractor's responsibility to maintain security at all times during the duration of the contract. The access will be locked at all times while unattended and shall be manned by approved badged personnel only. It includes the access to the borrow site, the batch plant site, the storage site and/or the fill area.

OPERATIONS

Aviation Department, Planning and Development Section (P&D) is charged with the responsibility of overseeing construction projects within the airport property, including the

proper execution of all facets of the construction activities and compliance with applicable Federal Regulations. The Aviation Operations Section is responsible for the safety and efficiency of the airport operation through daily operation management. The contractor shall comply with all directives issued by Aviation P&D and Operations Section in a timely manner.

VEHICULAR OPERATIONS

Not all badged personnel need to have an airfield driver license. If the badge personnel need to drive in the airport operations area (AOA), he/she must attend the required driving course sponsored by Airport Operations and takes approximately four (4) hours to complete. No vehicles may be operated within the Air Operations Area (AOA) until the drivers successfully pass the driving course and satisfactory Insurance Certificates are on file with the office of Planning & Development. Upon course completion, the individual will be required to demonstrate knowledge of rules, regulations, and procedures governing their behavior while in movement area via written and practical examinations.

All vehicular movement areas used by the contractor will be subject to the approval of the Aviation Department. All airfield drivers who are found in violation of the Airfield Driver's Training guidelines or the Airport Rules and Regulations will be issued a written citation and will be subject to possible revocation and termination of AOA driving privileges.

All construction vehicles/mechanized equipment operating on Airport property needs to have a 12" company logos or 6" letters identifying the company, displayed on both doors. All construction vehicles and mechanized equipment authorized within the airfield Movement area, ramps or related safety areas shall also need to have one FAA approved flag located on the uppermost portion of the vehicle/ mechanized equipment or is escorted by a vehicle so equipped. The FAA approved flag is a 3'*3' orange and white checkered flag with each box being 1' square.

During the periods of low visibility or evening, the contractor shall follow Advisory Circular 150/5210-5D, Painting, Marking, and Lighting of Vehicles Used on an Airport to provide identification lighting devices on vehicles and construction equipment while working in the airport operations area (AOA).

During the night time hours, all equipment operating on the airport exceeding 15 feet in height shall be lit with a red obstruction light in accordance with Advisory Circular 70/7460-1K, Obstruction Marking and Lighting. The light is to be located on the uppermost portion of the equipment.

ESCORT

Any vehicle operated by personnel authorized to drive and to escort (red-badge with "E") within the AOA can only escort two vehicles and equipment being operated by personnel without having successfully completed the driving course. The escorted vehicles must be behind and proximate to the vehicle at all times while within the AOA including departing through the construction access. All escorted vehicles must have a 12" company logo each on the driver door and passenger door. Should the need arise to enter or cross an active runway, the escort

must be done by personnel from Airport Operations and coordinated through Airport Operations.

BARRICADES

All construction areas shall be properly barricaded, signed and marked as directed by the Aviation Department in accordance with the barricade markings shown on the drawings. Barricades shall be properly secured as necessary to prevent overturning or displacement from wind or jet blast and shall be illuminated. Refer to FAA Advisory Circular 150/5340-1K "Standards for Airport Markings" for FAA lighting and marking standards on airport runways, taxiways and aprons and FAA AC 150/5370-2F "Operational Safety on Airports during Construction" for aviation safety during construction. Excavated areas shall not be left unattended unless appropriate barricades are provided. The contractor shall have a designated contact person with a telephone number on file with the Airport Operations who shall be on call 24 hours a day in order to maintain the barricades. Location and placement shall be adjusted as necessitated by changes in construction progress.

Safety netting shall be installed in locations as shown on the drawings or as directed by the Resident Engineer on the field. Netting shall be installed prior to the start of construction and shall be maintained for the duration of the project. Adjustments in location shall be made as directed by the Aviation Department.

Should the contractor fail to maintain barricades, barriers, signage and/or erosion control devices and Aviation Department Personnel are required to perform corrective action, the contractor will be charged for this service.

COMMUNICATION:

In order to maintain constant communication with the air traffic control tower, the contractor shall furnish and maintain in good operating condition, at least one two-way portable VHF radio having a frequency of 121.9 MHZ to aid in the control of vehicles on the airfield.

Operators of any radio equipped vehicles on Movement areas must be trained and familiar with airport radio procedures prior to operating on movement and safety areas.

Vehicle operators must obtain ATCT clearance before entering/operating on Movement area. If working in the Movement area and runways/taxiways safety areas, the contractor must continuously monitor radio. Vehicles, equipment and pedestrians will not be allowed into any taxiway/runway safety area while aircraft operations are being conducted.

ACCIDENT REPORT:

Contractor must immediately report in writing to the Airport Communication Center (207-3433) for all accidents in connection with the performance of work, whether on or adjacent to the site. He also needs to send a copy of the report to SAIA Planning and Development Division.

STORAGE & MARSHALLING AREAS

EXCESS MATERIAL

All material removed from the construction site, which is not to be used in the final construction shall be removed from the Airport Property and disposed of in a legal manner. No excess material shall be disposed of on Airport Property unless prior written approval from the Aviation Department is issued.

CONSTRUCTION MATERIALS

Construction materials not for immediate use shall be stockpiled at the Designated Marshalling Area. Other materials may be stored at approved locations proximate to the work area provided however that the piles are no greater than 18" in height. Higher piles may be permitted only during working hours and in such quantity that they may be reduced in height to 18" maximum within thirty (30) minutes of notification.

EQUIPMENT

All equipment shall be stored at the designated storage areas during non-working times. The Aviation Department may grant special provisions for equipment, which is not readily movable to store elsewhere upon approval.

NAVIGATIONAL EQUIPMENT

TESTING

The FAA maintains various forms of navigational equipment and appurtenances throughout the airport. There may be times during construction where tests and/or equipment checks must be run to maintain serviceability. The contractor shall comply with all requests and directives during the prosecution of the tests. Timely notification of such tests cannot be guaranteed.

CABLES

The Aviation Department and the FAA communication cables, navigational cables, monitor cables and power cables traverse the construction area. Every effort has been made to identify and properly depict the locations of all cables on the drawings. It is the contractor's responsibility to contact the Aviation Department at 207-3519, one week in advance of any construction in order for the cables within the construction area to be properly located and identified by Aviation Dept. and FAA San Antonio office.

The contractor shall identify the location and alignment of these cables along and throughout the entire project area using orange safety netting. Gaps to facilitate vehicular crossings will be permitted as required. These crossings shall be protected using 1½" thick by 8' long steel plates placed along the full width of each crossing. No construction shall commence prior to identifying the cables and placing the required steel plates.

Should the contractor encounter cables not identified on the drawings or field located or cut or otherwise damage any cable, he shall immediately cease operation in the area and notify the Aviation Department at 207-3519, in order for the FAA to identify the cable.

Unless directed otherwise, cut or damaged cables shall be replaced between the existing pull boxes (typically 2,000' (ft.) apart). An FAA certified splicer shall perform all splicing. After all splices are completed, the cables shall be tested for continuity and meggered by the contractor.

Installation of FAA underground cables to be done in accordance with FAA-C-1391b, Installation and Splicing of Underground Cables.

LIGHTING SYSTEMS

The Aviation Department and the FAA maintain the various forms of lighting systems throughout the airport. All portions of these systems shall be properly located and identified prior to the start of construction. The contractor is to contact the Aviation Department at 207-3519, one week in advance of any construction in order that these systems may be properly identified. All electrical work shall be coordinated through the Aviation Department to insure circuit outages are avoided and that the appropriate circuits are properly tagged out. Where directed, the contractor shall provide the necessary safety netting and vehicular crossings as outlined in the section entitled **Cables**.

Any circuit damaged by the contractor shall be repaired at the sole expense of the contractor. Splices will not be allowed. All repairs shall be made from existing splice to existing splice complete with new conduit. Should the contractor have no electricians available to complete the repair, the Aviation Department electricians will complete the repairs and the contractor will be charged for this service.

All labor, materials, tools, cables and connectors necessary to provide temporary circuits as required shall be provided by the contractor.

May 27, 2009

This Page Intentionally Left Blank

PROCEDURES FOR OBTAINING AIRPORT PERSONNEL IDENTIFICATION MEDIA/BADGE AND AIRFIELD DRIVER'S LICENSE AT SAN ANTONIO INTERNATIONAL AIRPORT (SAT)

As per FAA/TSA guidelines, a person performing work in the Security Identification Display Area (SIDA), Secured Area, Sterile Area or Airport Operations Area must have a valid Airport Identification Media (known as a SAT badge) or be under an airport approved escort by a person having a SAT badge with the white "E" (escort endorsement) on the badge. Furthermore, each badge holder with the white "E" may escort up to five (5) unbadged individuals while keeping same under positive control at all times while in the SIDA, Secured Area, Sterile Area and/or the project site. **Note:** If the person is disqualified from receiving a SAT badge during the badge application process, or becomes disqualified after receiving a SAT badge, the individual can no longer be present anywhere within the SIDA, Secured Area, Sterile area and/or the project areas. Furthermore, any contractor assigned to the project who has a business related need to be present within the SIDA, Secured Area or Sterile Area for more than 14 days (consecutive or intermittently) must be processed for a SAT badge.

If driving is involved, the person must have a valid SAT badge and the appropriate airfield driver's license to operate a vehicle in the SIDA and/or the project site. If a vehicle escort is required, each SAT badge holder with the white "E" on his badge (and the appropriate airfield driver's license) may escort up to two (2) vehicles if there is only one unbadged person in each vehicle being escorted.

All vehicles operating in the SIDA or the project area must have the appropriate airport approved company signage on the vehicle. The signage must meet the following requirements: Company name must be in at least six inch (6") tall lettering and/or the company logo must be at least twelve inches (12") tall. The signage must be placed on both vertical sides of any self propelled, motorized vehicle at all times while within the SIDA or the project site. If signage is not available, an Airport issued "Top Hat" may be used for vehicles under an airport approved vehicle escort or while parked in the SIDA. A Top Hat may be obtained at SIDA vehicle gate #20 at the end of each work day.

The procedures to obtain an Airport Identification Media (badge) and/or an airport driver's license are as follows:

A) <u>Airport Badge and ID Office</u>

1) The Airport Security Badge and ID Office is located at 9623 West Terminal Drive, Bldg. #1322.

2) Hours of Operation are as follows:

Monday – Thursday	8:00 am – 4:00 pm
Friday	8:00 am – 3:00 pm

Office is closed for lunch daily from 11:30 am – 12:30 pm

3) Once an Aviation Department division has notified the Airport Security of an approved City contract which will require the badging of personnel, the Contactor's designated representative for badging must call Kenneth Barrett at (210) 207-3840 to arrange to become an Authorizing Signatory. The Authorized Signatory will be responsible for all Airport Identification Media (badges) to be issued to the Contractor's employees working on the contract. Mr. Barrett will send the appropriate link to the person in order to complete an application for badge processing.

Once the application has been approved an appointment will be set to come to the Badge and ID Office for processing and training. Once the person has completed the required training they will then be authorized to approve applications for other Contractor employees under their responsibility. **Note:** If an employee of the Contractor has been convicted of any of the offenses listed in Exhibit 1 hereto, that employee will be immediately disqualified from obtaining an Airport Identification Media (badge) and will be ineligible to perform work at SAT.

4) All Airport Identification Media (badge) applications are processed electronically via an online application process. Once the Contractor's Authorizing Signatory has been trained successfully on their responsibilities and completed all phases of the badging process, the website address for Contractor's employees to use to complete the application will be provided. Furthermore, the Authorizing Signatory will be provided instructions on how to setup, use and approve badge applications via the online badging system.

5) As of October 1, 2010 badge processing fees are:

Fingerprint-based Criminal History Records Check (CHRC)/STA	$65.00
SAT Identification Media/badge (new, renewal, replacement)	$35.00
Lost Identification Media/badge	$25.00
Not Returned Identification Media/badge	$75.00
Reactivation of Identification Media/badge (Security Violation)	
1st Offense	$25.00
2nd Offense	$50.00
3rd Offense	$75.00
Progressive Security Fee Program	Sliding Scale
AOA Parking Decal (General Aviation leaseholds only)	$5.00

6) Payment for processing is as follows:

- Each applicant can pay individually at their first appointment with cash, check or personal credit card.

- If the applicants wish to pay with a company credit card, the company representative whom the credit card is issued to must accompany the applicant and submit payment at their first appointment.

- With prior coordination with the Fiscal Operations Division the Authorized Signatory can complete and sign an "Authorization to Bill" form and send it with the applicant on the day they are to process. The City of San Antonio will then bill the company for the applicants processed.

There is no refund for badge processing fees.

7) When the applicant comes in to process to the Badge and ID Office they must present identification in compliance with the "List of Acceptable Documents" see Exhibit II.

8) As part of the badging process, all Contractor employees are required to complete a computer-based SIDA training class. All documents necessary to complete the application process (including obtaining the applicants fingerprints to conduct a Criminal History Records Check (CHRC) and Security Threat Assessment (STA) must be completed before the Contractor's employees may attend the computer-based SIDA training class. The SIDA class takes approximately 1-1 ½ hours to complete and the applicant must make a 100% on the final test to successfully complete this stage of the badging process. The SAT badge will only be issued after the applicant successfully completes the SIDA class; Airport Security completes the CHRC and receives an approved STA. It may take anywhere from five (5) business days to four (4) weeks before the applicant may be issued a Airport Identification Media (badge).

9) At the end of the contract, the Contractor's Authorizing Signatory is required to return all issued Airport Identification Media (badge) to the Airport Security Badge and ID Office directly and inform the Aviation Department division that managed the contract that all badges have been returned before final payment for the work can be processed. Each SAT badge that is not returned to the Airport Security Badge and ID Office is subject to a $75.00 non-returned badge fee.

10) Any lost or stolen Airport Identification Media (badge) must be reported to Airport Security immediately by contacting (210) 207-3526 or 207-3433 so the badge can be deactivated. The Contractor's employee must contact the Contractor's Authorizing Signatory to make arrangements to complete the necessary paperwork to receive a replacement SAT badge. The Contractor shall be responsible for any fees/fines resulting from the lost, stolen, or otherwise unaccounted for SAT badge.

B) <u>Airfield Driver License:</u>

1) The Airport Operations Office is located at 457 Sandau Rd., San Antonio, TX 78216.

2) It is the sole responsibility of the tenants, airlines or contractors to select the correct training course needed for their employees. There are two types of airfield training courses: non-movement areas and movements areas. Non-movement areas are aprons and parking areas in the Airport Operation Area (AOA). No ATCT clearance is required. Movement w/Restrictions: Taxiways as well as other areas using for taxiing aircraft and aircraft parking areas. ATCT clearance is required.

3) To obtain an Airfield Driver's License an employee must attend an Airport sponsored drivers training class and pass a written test at the end of each class with a 90% or better. The airfield driver license can only be issued to a person passing the test.

4) The non-movement classes are held on every Monday and Tuesday at 9:00 a.m. and Thursday at 1:00 p.m. The movement classes are held every Tuesday at 1:00 p.m. and Thursday at 9:00 a.m. All classes must be scheduled in advance. To schedule a class call Airport Operations at 207-3540.

5) A valid State driver's license and a SAT Security Identification Display Area (SIDA) badge and a copy of certificate of insurance document of the individual's employer with the proper coverage must be presented at the time of the class. The copy of all three items stated must be submitted to the AOO for record on file.

6) You must have radio contact with FAA Air Traffic Controller to receive clearance to cross taxiways at all times.

7) Airfield Driver's Training Program Fees:

Course	Amount:
Non-Movement Area	$ 20.00
Movement Area	$ 25.00
Replacement License	$ 10.00
Expired License Penalty	$ 20.00

We will continue sending renewal notices approximately one month in advance to assure that drivers have enough time to schedule to attend the class prior to expiration.

8) For the construction contracts, there is no separate line item on the bid proposal for the costs involved and the costs shall be considered incidental to mobilization expenses.

9) The licensed driver can only travel on the areas authorized and use the gate approved by the Airport Security Office. A driver who loses his or her Airfield Driver License is responsible for reporting the loss immediately to Airport Operations Office. The employee will be responsible to pay the replacement fee for his/her airfield license.

10) The company shall have coverage for the vehicles used inside Air Operations Area for the project involved at all times. An Automobile Liability Policy with no less than a Combined, Single Limit for Bodily Injury and Property Damage of $5,000,000 per occurrence, or its equivalent in Umbrella or Excess Liability Coverage.

In addition, the City of San Antonio must be listed as an "additional insured" in the endorsement section. The Insurance can be under the Company name if a company vehicle will be used and the vehicle must be listed in the insurance policy either specifically by VIN number or generally by covering all autos owned, leased or operated while conducting business on behalf of the company. If this is a private vehicle covered only by personal insurance, the insurance must be under the drivers name and VIN number must be listed. It is the company's responsibility to notify the Aviation Department for any insurance changes.

11) At the end of the project, the authorized Project Manager shall return all airfield driver licenses to the Airport Operations Office and notify Planning and Development and at the end of the return process so that the final payment to the consultants or contractors for the work involved can be processed.

12) Vehicles routinely operating within the Movement area shall have an operating yellow flashing light mounted on the uppermost part of the Vehicle.

EXHIBIT I

LIST OF DISQUALIFYING CRIMES

Title 49, Code of § 1542.209 Fingerprint-based criminal history records checks (CHRC).

(1) Forgery of certificates, false marking of aircraft, and other aircraft registration violation; 49 U.S.C. 46306.

(2) Interference with air navigation; 49 U.S.C. 46308.

(3) Improper transportation of a hazardous material; 49 U.S.C. 46312.

(4) Aircraft piracy; 49 U.S.C. 46502.

(5) Interference with flight crew members or flight attendants; 49 U.S.C. 46504.

(6) Commission of certain crimes aboard aircraft in flight; 49 U.S.C. 46506.

(7) Carrying a weapon or explosive aboard aircraft; 49 U.S.C. 46505.

(8) Conveying false information and threats; 49 U.S.C. 46507.

(9) Aircraft piracy outside the special aircraft jurisdiction of the United States; 49 U.S.C. 46502(b).

(10) Lighting violations involving transporting controlled substances; 49 U.S.C. 46315.

(11) Unlawful entry into an aircraft or airport area that serves air carriers or foreign air carriers contrary to established security requirements; 49 U.S.C. 46314.

(12) Destruction of an aircraft or aircraft facility; 18 U.S.C. 32.

(13) Murder.

(14) Assault with intent to murder.

(15) Espionage.

(16) Sedition.

(17) Kidnapping or hostage taking.

(18) Treason.

(19) Rape or aggravated sexual abuse.

(20) Unlawful possession, use, sale, distribution, or manufacture of an explosive or weapon.

(21) Extortion.

(22) Armed or felony unarmed robbery.

(23) Distribution of, or intent to distribute, a controlled substance.

(24) Felony arson.

(25) Felony involving a threat.

(26) Felony involving—

(i) Willful destruction of property;

(ii) Importation or manufacture of a controlled substance;

(iii) Burglary;

(iv) Theft;

(v) Dishonesty, fraud, or misrepresentation;

(vi) Possession or distribution of stolen property;

(vii) Aggravated assault;

(viii) Bribery; or

(ix) Illegal possession of a controlled substance punishable by a maximum term of imprisonment of more than 1 year.

(27) Violence at international airports; 18 U.S.C. 37.

(28) Conspiracy or attempt to commit any of the criminal acts listed in this paragraph (d).

EXHIBIT II

List of Acceptable Documents For Employment Verification

All documents must be valid, expired documents will NOT be accepted

All applicants requiring fingerprints must also provide at least one (1) form of photo identification.

List A **OR** **List B** **AND** **List C**

Documents that Establish Both Identity and Employment Eligibility

1. U.S. Passport or Passport Card
2. Permanent Resident Card or Alien Registration Receipt Card (Form I-551)
3. Foreign passport that contains a temporary I-551 stamp or temporary I-551 printed notation on a machine-readable immigrant visa
4. Employment Authorization Document that contains a photograph (Form I-766)
5. Form I-94 or Form I-94A bearing the same name as the passport and containing an endorsement of the alien's nonimmigrant status, as long as the period of endorsement has not yet expired and the proposed employment is not in conflict with any restrictions or limitations identified on the form
6. Passport from the Federated States of Micronesia (FSM) or the Republic of the Marshall Islands (RMI) with Form I-94 or Form I-94A indicating nonimmigrant admission under the Compact of Free Association Between the United States and the FSM or RMI

Documents that Establish Identity

1. Driver's license or ID card issued by a State or outlying possession of the United States
2. ID card issued by Federal, State, or local government agency or entities, provided it contains a photograph or information such as name, date of birth, gender, height, eye color, and address
3. School ID card with a photograph
4. Voter's registration card
5. U.S. Military card or draft record
6. Military dependent's ID card
7. U.S. Coast Guard Merchant Mariner Card
8. Native American tribal document
9. Driver's license issued by a Canadian government authority

For persons under the age of 18 who are unable to present a document listed above:

10. School record or report card
11. Clinic, doctor, or hospital record
12. Day-care or nursery school record

Documents that Establish Employment Eligibility

1. Social Security Card other than one that specifies on the face that the issuance of the card does not authorize employment in the United States.
2. Certification of Birth Abroad Issued by the Department of State (Form FS-545)
3. Certification of Report of Birth issued by the Department of State (Form DS-1350)
4. Original or certified copy of birth certificate issued by a State, county, municipal authority, or territory of the United States bearing an official seal
5. Native American tribal document
6. U.S. Citizen ID Card (Form l-197)
7. Identification Card for Use of Resident Citizen in the United States (Form l-179)
8. Employment authorization document issued by the Department of Homeland Security

Applicants who are U.S. Citizens Born Abroad or Naturalized U.S. Citizens using documents from List B and List C to establish Identity and Employment Eligibility must additionally present one of the following:

U.S Passport Number or Passport Card Number

Certificate of Naturalization (Form N-550 or N-570)

Certificate of US Citizenship (Form N-560 or N-561)

Certification of Report of Birth (Form DS-1350)

Consular Report of Birth Abroad (Form FS-240)

Certification of Birth Abroad (Form FS-545)

CITY OF SAN ANTONIO

SAN ANTONIO
DEPARTMENT OF AVIATION

CRANE AND/OR TEMPORARY CONSTRUCTION EQUIPMENT PROCEDURES IN AND AROUND AIRPORTS BUILDING PERMIT FORM

Permit No. _____

Crane Co.: _____

Max Tip Height: _____

Duration of Crane: _____

Hours of Operation: _____

Address: _____

Crane Co. Signature (Print and Sign):

_____

The purpose of the Airport Zoning ordinance is to prevent hazards to air navigation and airspace so as to protect the lives and property within the limits of San Antonio and the vicinity of airports (San Antonio International and Stinson Municipal Airports, Randolph and Lackland Air Force Bases, and Martindale and Camp Bullis Airfields). The ordinance is to prevent cranes and construction equipment from penetrating; however briefly, the City's airspace unless a special temporary authorization is obtained from the Aviation Department or the FAA. The primary considerations, before approving a crane or temporary construction equipment are the height and location/site of the equipment. The Aviation Department will decide to either approve the request or to involve the FAA based on the height and location of the equipment. The FAA's processing time is at least 60 workdays.

When using a crane or temporary construction equipment, please comply with the following:

1. Notify the Aviation Department as soon as it is decided obstruction equipment is needed for the project, but minimally 48 hours before the actual work starts. Phone numbers are 210-207-3514 and/or cell phone 210-355-2214.
2. Provide a detailed description of where the crane will be used. Use crossing or intersecting streets not an address.
3. Provide the date the equipment will be used, the hours of operation and the maximum height of the equipment.

Once approval is given, it is imperative to comply with the following:

1. The equipment will only operate during daylight hours.
2. The equipment will only operate during Visual Flight Rules (VFR) conditions, which is 3 mile visibility or greater.
3. The equipment will be lowered to the surrounding height when not in use.
4. The equipment will be obstruction flagged.

Thank you for maintaining a safe environment for the traveling public. If you have any questions please call Jim Wingate at 210-207-3514 or Alan Lopez at 210-207-3897.

E-Mail Address and phone numbers

Federal Aviation Administration – www.faa.gov
Bruce Beard - 817-838-1996, bruce.beard@faa.gov fax: 817-838-1991
Jim Wingate -210-207-3514, james.wingate@sanantonio.gov fax: 210-207-3544
~~Alan Lopez – 210-207-3897, alan.lopez@sanantonio.gov fax: 210-207-3544~~

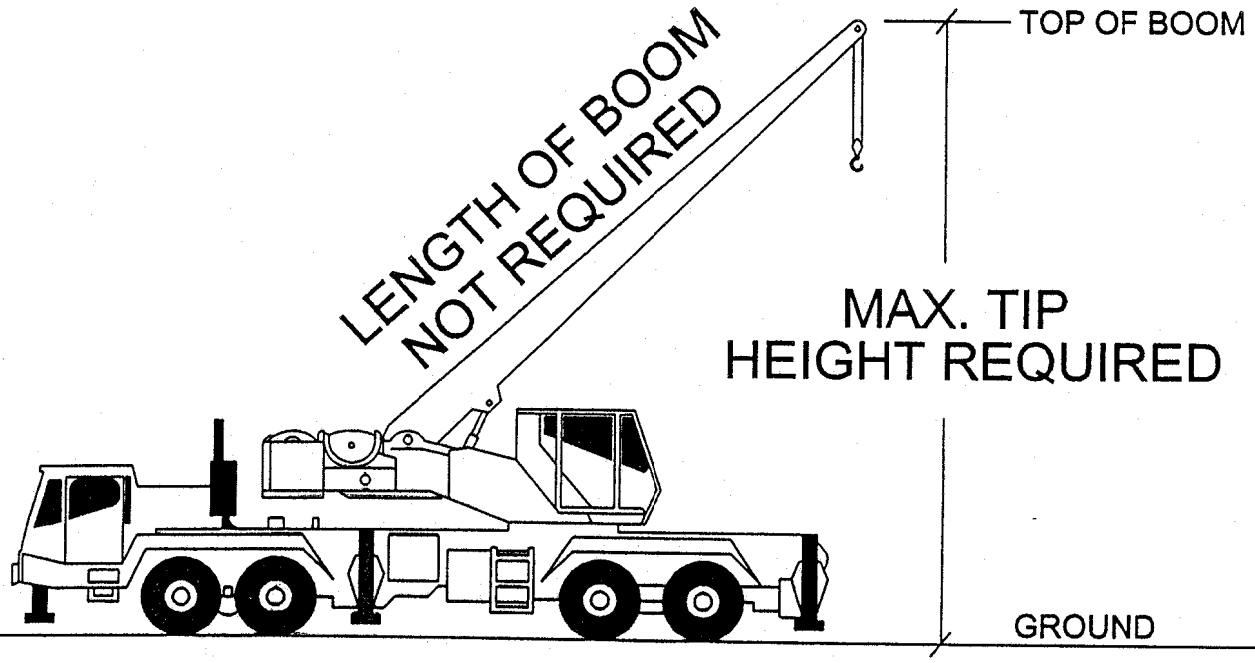

DEFINITION OF CRANE HEIGHT

Safety Notes:

1) The contractor shall remain clear of all taxiways, runways, taxilanes, safety areas, non-movement areas and the tenant areas at all times.

2) All contaminated soil must be transported to the designated soil staging facility temporarily. If the contractor contaminates the site, the contractor must notify the City of San Antonio Aviation Department at 207-3506. The contractor must also clean the affected area at their own expense.

3) Any additional costs, and/or fines, charged to the City of San Antonio Aviation Department due to contractor error, or violations will be passed on to the contractor for payment.

4) The contractor shall provide a uniformed and licensed security guard with adequate airport badge, acceptable to the owner and a functioning telephone at the AOA gate at all times while the gate is unlocked. All personnel and vehicles requiring access to the airfield (AOA) shall comply with all requirements of the airport police.

5) If the project is in or next to any taxiway, taxilane or runway, the contractor must have a mobile VHF radio with ATC ground control frequency 121.9 to aid in the control of vehicles on the airfield.

6) All vehicles and/or equipment operating inside Air Operations Area (AOA) must be provided with an FAA approved flag on a staff and attached to the vehicle so that the flag will be readily visible. The flag shall not be less than three feet square consisting of Aviation Orange and white squares of not less than a foot of each side.

5/27/2009

Safety Bulletin 15-02

Airport Rules and Regulations

This bulletin comes to you from the Aviation Department / Safety Division

PURPOSE: To enhance the visibility and safety of personnel here at the airport;

Over the past several weeks, Safety has observed several badged personnel that are not in compliance with the Airport Rules and Regulations with reference to Reflective Safety Vest, Wearing Seat-belts or other restraint systems (if vehicle is so equipped), and Smoking. Below you will find the reference as stated in the Airport Rules and Regulation

REFLECTIVE SAFETY VEST: Not being worn correctly

Sec. 3-26. - Reflective Safety Vests.

All persons on the AOA at San Antonio International Airport and at Stinson Municipal Airport must wear a reflective safety vest at all times. This regulation does not apply to aircraft passengers traversing to or from an aircraft and transient pilots or staff pilots conducting duties associated with the inspection or operation of an aircraft in preparation for flight. All persons working on any Airport highways, streets, or roads shall also be required to wear reflective safety vests to comply with the U.S. Department of Transportation's Work Zone Safety and Mobility regulations (23 CFR 630, subpart J or succeeding regulation). All required reflective safety vest must, at a minimum, meet ANSI Class-2, Level-2 standards and be worn properly, which means fastened in the front by using the zipper or Velcro fastener.

(Ord. No. 2013-01-31-0073, § 1(Att. I), 1-31-13)

WEARING SEATBELS: Not being used while in vehicle

Sec. 3-78. - Operations of Vehicles within the AOA.

(i) Seatbelts and other restraint systems shall not be disabled or removed and shall be maintained in good working order. Drivers, operators, and passengers shall use installed seatbelts or restraint systems at all times with no exception if Vehicle is so equipped.

(Ord. No. 2013-01-31-0073, § 1(Att. I), 1-31-13)

SMOKING: Smoking in unauthorized area.

Sec. 3-34. - Open Flame and Smoking Restrictions.

Smoking is prohibited on the AOA, in any hangar, shop, service station area, fuel storage area, terminal, office, or in any building, room, or place on the airport where smoking is prohibited by law. The Director is hereby authorized to designate smoking and nonsmoking areas at San Antonio International Airport and Stinson Municipal Airport.

(Ord. No. 2013-01-31-0073, § 1(Att. I), 1-31-13)

All Managers, Superintendents, Supervisors, please make sure that all your staff members that do not have access to a computer / email are aware of this Safety Bulletin.

Safety Reporting Methods: Use Voluntary Safety Report Form (SMS FM 02)	
SAFETY HOTLINE – 1 (210) 207-1600	**FAX – 1 (210) 207-1689**
E MAIL – safety.report@sanantonio.gov	**John Chase (210) 207-1656**

Posted 23 Apr 2015 **Safety is the engine, and you are the key that starts it.** Remove: 23 Jul 2015

FAA Underground Cable Notes:

Location of existing FAA control and communications cables are shown in approximate general locations. The contractor shall coordinate with appropriate representative at least 48 hours in advance prior to commencing excavation in all areas.

If contractor cuts an FAA communications cable, the following will apply:

A. Contractor will be required to replace the cut cable between the existing pull boxes. The average distance between two pull boxes is over 2,000 L.F.

B. All communications cable-splicing must be performed by the contractor utilizing FAA approved and certified splicers. Prior to commencing any splicing activities, an FAA representative shall be contacted to have him/her identify cable strands.

C. After splicing, cables will be tested by the contractor for continuity and for insulation leakage (Hi-Pot test to ground), as directed by the FAA representative.

D. The contractor shall coordinate all matters relating to FAA cables with the project manager and FAA representatives before commencing excavation or repair work.

E. The contractor shall be required to have splice kits located on site. Kits & FAA certified splicer personnel shall be readily available in the event that any communications cables are cut or damaged. All repairs shall be initiated immediately & completed the same day.

F. The driving of heavy equipment or machinery across existing underground cable shall be restricted to designated crossings only. All underground cable crossings shall be protected with ½" * 10' * 4' steel plates. No costs will be charged to the City. All steel plates must be removed by the contractor after the work is completed and return the field to the previous condition or better.

G. Installation of FAA underground cables to be done in accordance with FAA-C-1391b, Installation and Splicing of Underground Cables.

FIELD OFFICE AND SHEDS

The Contractor shall furnish a minimum 300 s.f. office with air conditioning and heating, telephone and convenient access to a restroom nearby for the Resident Project Inspector's use during the course of the work. Field office shall be divided to provide a separate room set aside for storage of concrete test specimens and for other testing equipment, material certifications and samples. Furnishing shall include one office desk, two chairs, a drafting table and drafting stool and specimen curing tanks in sufficient size and number to contain the maximum number of test beams anticipated. Tanks shall be provided with thermostatically controlled meters to insure the water temperature is maintained at the prescribed temperatures stated in Item P-501.

Upon completion of the project, the field office and furnishing will remain the property of the Contractor and it is the contractor's responsibility and costs to remove the field office and furniture out of the airport property.

All costs for providing one field office, utilities, furniture, and tanks are incidentals to Item 101, Preparing Right-of-Way.

June 24, 2009

DIVISION I - EARTHWORK

ITEM

100 MOBILIZATION

100.1. DESCRIPTION: *Establish and remove offices, plants, and facilities. Move personnel, equipment, and supplies to and from the project or the vicinity of the project site to begin work or complete work on Contract Items.*

100.2. MEASUREMENT: This Item will be measured by the lump sum as the work progresses.

100.3. PAYMENT: Partial payments of the lump sum bid for mobilization will be as follows. The adjusted Contract amount for construction Items as used below is defined as the total Contract amount less the lump sum for mobilization.

A. Payment will be made upon presentation of a paid invoice for the payment bond, performance bond, and required insurance. The combined payment for bonds and insurance will be no more than 10% of the mobilization lump sum or 1% of the total Contract amount, whichever is less.

B. Payment will be made upon verification of documented expenditures for plant and facility setup. The combined amount for all these facilities will be no more than 10% of the mobilization lump sum or 1% of the total Contract amount, whichever is less.

C. When 1% of the adjusted Contract amount for construction Items is earned, 50% of the mobilization lump sum bid or 5% of the total Contract amount, whichever is less, will be paid. Previous payments under this Item will be deducted from this amount.

D. When 5% of the adjusted Contract amount for construction Items is earned, 75% of the mobilization lump sum bid or 10% of the total Contract amount, whichever is less, will be paid. Previous payments under the Item will be deducted from this amount.

E. When 10% of the adjusted Contract amount for construction Items is earned, 90% of the mobilization lump sum bid or 10% of the total Contract amount, whichever is less, will be paid. Previous payments under this Item will be deducted from this amount.

F. Payment for the remainder of the lump sum bid for "Mobilization" will be made on the next estimate cycle after the initial retainage estimate or at final acceptance for projects without retainage.

100.4. BID ITEM:

Item 100.1 - Mobilization - lump sum

Item 100.2 - Insurance and Bond - lump sum

ITEM

101 PREPARING RIGHT-OF-WAY

101.1. DESCRIPTION: *Prepare the right of way and designated easements for construction operations by removing and disposing of all obstructions when removal of such obstructions is not specifically shown on the plans to be paid by other Items.*

101.2. MATERIALS:

A. Obstructions. Obstructions shall be considered to include, but not limited to, remains of houses not completely removed by others, foundations, floor slabs, concrete, brick, lumber, plaster, cisterns, septic tanks, basements, abandoned utility pipes or conduits, equipment or other foundations, fences, retaining walls, outhouses, shacks, and all other debris as well as buried concrete slabs, curbs, gutters, driveways, and sidewalks.

This item shall also include the removal of trees, stumps, bushes, shrubs, brush, roots, vegetation, logs, rubbish, paved parking areas, miscellaneous stone, brick, drainage structures, manholes, inlets, abandoned railroad tracks, scrap iron and all debris, whether above or below ground, except live utility facilities.

It is the intent of this specification to provide for the removal and disposal of all obstructions to the new construction together with other objectionable materials not specifically provided for elsewhere by the plans and specifications.

B. Explosives. This item shall not govern for the demolition of buildings by the use of explosives. Such demolition work shall be governed by the use of a special specification controlling the work.

C. Fences. Unless shown otherwise on the plans, all fences along the right-of-way which are damaged or removed temporarily by the Contractor shall be replaced by the Contractor to an equal or better condition at no additional cost to the City.

D. Hazardous Materials. If the Contractor encounters hazardous substances, industrial waste, other environmental pollutants, underground storage tanks, or conditions conducive to environmental damage, Contractor shall immediately stop work in the area affected and report the condition to the Owner's representative in writing. Contractor shall not be responsible for or required to conduct any investigation, site monitoring, containment, cleanup, removal, restoration or other remedial work of any kind or nature (the "remedial work") under any applicable level, state or federal law, regulation or ordinance, or any judicial order. If the Contractor agrees in writing to commence and/or prosecute some or all of the remedial work, all costs and expenses, to include any extension of the contract time, of such remedial work shall be paid by Owner to Contractor as additional compensation.

101.3. EQUIPMENT: Provide applicable equipment to conduct work as described in this specification or as specified on the plans.

101.4. CONSTRUCTION: Protect designated features on the right of way and prune trees and shrubs as directed. Do not park equipment, service equipment, store materials, or disturb the root area under the branches of trees designated for preservation. When shown on the plans, treat cuts on trees with an approved tree wound dressing within 20 min. of making a pruning cut or otherwise

causing damage to the tree. Follow all local and state regulations when burning. If burning of brush is approved, pile and burn at approved locations. When working in state or national forests or parks, coordinate work with state and federal authorities. Testing, removal, and disposal of hazardous materials will be in accordance with 101.2.D, "Hazardous Materials."

Clear areas shown on the plans of all obstructions, except those landscape features that are to be preserved. Such obstructions include but are not limited to those identified in 101.2.A, "Obstructions" and other items as specified on the plans. Remove vegetation and other landscape features not designated for preservation. Removal of live utility facilities is not included in this Item. Remove culverts, storm sewers, manholes, and inlets in proper sequence to maintain traffic and drainage.

Unless otherwise indicated on the plans, all underground obstructions shall be removed to the following depths:

- In areas receiving embankment, remove obstructions not designated for preservation to 2 ft. below natural ground.
- In areas to be excavated, remove obstructions to 2 ft. below the excavation level.
- In all other areas, remove obstructions to 1 ft. below natural ground.

When allowed by the plans or directed, cut trees and stumps off to ground level.

Holes remaining after removal of all obstructions, objectionable materials, vegetation, etc. shall be backfilled and tamped and the entire area bladed, to prevent ponding of water and to positive provide drainage. Backfill materials deemed unacceptable by the Engineer shall be removed and replaced at no additional cost to the City. In areas that are to be immediately excavated, backfilling and blading may be eliminated if approved by the Engineer. Areas to be used as borrow sites and material sources shall have all obstructions, objectionable materials, vegetation, etc., removed to the complete extent necessary to prevent such objectionable matter from becoming mixed with the material to be used in the construction.

Where a conduit is shown to be replaced, it shall be removed in its entirety and all connections to the existing conduit shall be extended to the new line. Where an existing conduit is to be cut and plugged, the line shall be cut back not less that 2 feet and a plug of concrete not less that 2 feet long shall be poured and held in the end of the pipe or the plug may be accomplished by using a precast stopper grouted into place.

Material to be removed will be designated as "salvageable" or "non-salvageable" on the plans prior to bidding by the Contractor. All "salvageable" material will remain the property of the City and will be stored at the site as directed by the Engineer. All "non-salvageable" materials and debris removed shall become the property of the Contractor and shall be removed from the site and shall be disposed of properly and in accordance with local, state, and federal requirements.

All asphaltic material shall be deposited of or recycled at a facility authorized to accept the asphalt for such purposes.

Dispose of wells in accordance with TxDOT Item 103, "Disposal of Wells."

101.5. MEASUREMENT: "Preparing Right-of-Way" for new construction will be measured by the lump sum.

101.6. PAYMENT: This item will be paid for at the contract lump sum price bid for "Preparing Right-of-Way," which price shall be full compensation for work herein specified, including the furnishing of all materials, equipment, tools, labor, and incidentals necessary to complete the work. The lump sum price will be pro-rated based on the number of phases in the project. A phase will be eligible for payment when street excavation is completed for that phase.

101.7. BID ITEM:

Item 101.1 - Preparing Right-of-Way - lump sum

ITEM

103 REMOVE CONCRETE

103.1. DESCRIPTION: *This item shall govern the breaking up, removing, and satisfactorily disposing of existing concrete, as classified, at locations shown on the plans or as directed by the Engineer. Existing concrete not shown on the plans, located beneath the natural ground surface, not indicated by the Engineer or not obvious to the naked eye will not be covered under this item. Such materials will be removed as needed and paid for under Item 104 "Street Excavation," Item 105 "Channel Excavation," or Item 306 "Structural Excavation."*

103.2. CLASSIFICATION: Existing concrete to be removed under this item will be classified as follows:

A. Concrete Curb. "Concrete Curb" will include curb, curb and gutter, and low curb at driveways, and combinations thereof. The removal of monolithic concrete curb or dowelled concrete curb will be included in the concrete pavement measurement.

B. Concrete Traffic Barrier. "Concrete Traffic Barrier" will include permanent concrete barrier used for channeling or dividing traffic that is not considered salvageable.

C. Sidewalks and Driveways. "Sidewalks and Driveways" will include concrete sidewalks and driveways.

D. Miscellaneous Concrete. "Miscellaneous Concrete" will include all other items that are not noted above or covered by other items.

103.3. EQUIPMENT: Provide the machinery, tools and equipment necessary for proper prosecution of the work. All machinery, tools and equipment used shall be maintained in a satisfactory and workmanlike manner.

103.4. CONSTRUCTION:

A. General. The existing concrete shall be broken up, removed, and disposed of by the Contractor in accordance with federal, state, and local regulations.

B. Partial Removal of Concrete. When only a portion of the existing concrete is to be removed, care shall be exercised to avoid damage to that portion to remain in place. The existing concrete shall be cut to neat lines shown on the plans or as established by the Engineer, by sawing with an appropriate type circular concrete saw to a minimum depth of ½-inch. Any existing concrete which is damaged or destroyed beyond the neat lines so established shall be replaced at the Contractor's expense. Where reinforcement is encountered in the removed portions of the concrete, a minimum of 1-foot shall be cleaned of all old concrete and left in place to tie into the new concrete construction.

103.5. MEASUREMENT: Measurement for this item will be conducted as follows:

A. Concrete Curb. Concrete curb removed as prescribed above will be measured by the linear foot in its original position regardless of the thickness and reinforcing steel encountered.

B. Concrete Traffic Barrier. Concrete Traffic Barrier as prescribed above will be measured by the linear foot in its original position regardless of the type or size encountered.

C. Concrete Sidewalk and Driveway. Concrete sidewalks and driveways removed as prescribed above will be measured by the square foot in its original position regardless of the thickness of the concrete and reinforcing steel encountered.

D. Miscellaneous Concrete. Miscellaneous Concrete will be measured by the square foot in its original position regardless of the thickness of the concrete and reinforcing steel encountered.

103.6. PAYMENT: This item will be paid for at the contract unit price bid for "Remove Concrete Curb," "Remove Concrete Traffic Barrier," "Remove Concrete Sidewalks and Driveways," or "Remove Miscellaneous Concrete" which price shall be full compensation for all work herein specified, including the furnishing of all materials, equipment, tools, labor and incidentals necessary to complete the work.

103.7. BID ITEM:

Item 103.1 - Remove Concrete Curb - per linear foot

Item 103.2 - Remove Concrete Traffic Barrier - per linear foot

Item 103.3 - Remove Sidewalks and Driveways - per square foot

Item 103.4 - Remove Miscellaneous Concrete - per square foot

ITEM

105 CHANNEL EXCAVATION

105.1. DESCRIPTION: *Excavate open channels within the limits shown on the plans, regardless of the type of material encountered, and dispose of any unused excavated materials. Construct, shape and finish all earthwork involved in conformance with the required lines, grades and cross sections, and in accordance with the plans and specification requirements.*

Note: This item does not apply to excavation required for box culvert conduits, cast-in-place or precast pipe storm sewers, or for pipe sanitary sewers as excavation for those types of construction are governed by the conditions set forth in other specification items. Excavation for other small drainage structures shall be governed and paid for under other appropriate items or under Item 306, "Structural Excavation", when indicated on the plans. Such excavation will be considered as that beyond the limits of the channel excavation as indicated on the plans.

105.2. MATERIALS: All excavation shall be unclassified and shall include all materials encountered regardless of their nature or the manner in which they are removed, except those covered by other pay items.

A. Hazardous Materials. If the Contractor encounters hazardous substances, industrial waste, other environmental pollutants, underground storage tanks, or conditions conducive to environmental damage, Contractor shall immediately stop work in the area affected and report the condition to the Owner's representative in writing. Contractor shall not be responsible for or required to conduct any investigation, site monitoring, containment, cleanup, removal, restoration or other remedial work of any kind or nature (the "remedial work") under any applicable level, state or federal law, regulation or ordinance, or any judicial order. If the Contractor agrees in writing to commence and/or prosecute some or all of the remedial work, all costs and expenses, to include any extension of the contract time, of such remedial work shall be paid by Owner to Contractor as additional compensation.

B. Existing Structures/Obstructions. Removal of structures and other obstructions prior to excavation and finishing of all other earthwork described herein shall be completed and paid for in accordance with Item 101, "Preparing Right-of-Way" unless otherwise stated on the plans.

C. Existing Asphaltic Materials. All asphaltic material shall be disposed of or recycled at a facility authorized to accept the material for such purposes.

105.3. EQUIPMENT: Provide applicable equipment to conduct work as described in this specification or as specified on the plans.

105.4. CONSTRUCTION: All channel excavation shall be performed as shown on the plans, or specified herein if not denote on the plans, and shall conform to the established alignment, grades and cross sections. Suitable excavated materials shall be utilized, insofar as practicable, in constructing required embankments, or backfilling around drainage structures.

Unsuitable excavation or excavation in excess of that needed for construction shall be known as "Waste" and shall become the property of the Contractor and it shall become his sole responsibility to dispose of this material off the limits of the right-of-way. Proper disposal shall be in conformance with, but not limited to, the following provisions:

- Do not deposit excavated material within jurisdictional wetlands, and
- Obtain appropriate permits and apply provisions pertaining to soil erosion and stream pollution, when necessary, to meet federal and/or local regulations, rules, and procedures.

A. Temporary Construction Access. Any temporary construction access that crosses a channel will be constructed so as to allow a continuous flow at all times. The channel flow line will not be blocked or raised at any temporary construction access.

B. Channel Side Slope (Fill). When the plans indicate fill of a channel side slope, the fill material shall be placed in layers not to exceed 12 inches and shall be benched or notched into existing slopes. Each lift of fill shall be compacted to the required density and moisture content as shown below, unless otherwise shown on the plans:

Subgrade Material	Density	Moisture Content
PI ≤ 20	≥ 95% of Max Dry Density	- 2% of Opt. or greater
PI > 20	≥ 95% of Max Dry Density	≥ Opt. Moisture

The maximum dry density and optimum moisture content shall be determined in accordance with TxDOT Test Method Tex-114-E. Tests for in place density shall be made in accordance with TxDOT Test Method Tex-115-E and within 24 hours after compacting operations are completed. If the material fails to meet the density specified, it shall be re-worked as necessary to obtain the density required.

The fill material shall be free from roots, trash, silt and objectionable debris and shall be approved by the Engineer. The channel side slopes, in fill areas, shall be cut to the finished dimensions after completion of the fill process.

C. Lateral Ditches. At locations where lateral ditches enter the channel, the Contractor shall perform grading as may be required to maintain lateral ditch side slopes within the easement area. The cost of all grading shall be considered incidental to the unit price bid and no extra payment will be made.

D. Channel Completion. Prior to final acceptance by the Engineer, the Contractor shall remove all sediment from the bottom of the channel and dispose of this material off site. The cost of sediment removal and grading shall be incidental to the unit price bid, and no extra payment will be made. Revegetation is not required on channels primarily composed of rock.

105.5. MEASUREMENT: Accepted channel excavation for open channels will be measured in its original position and the volume computed in cubic yards by the method of average end areas in accordance with the lines, grades and cross sections shown on the plans.

105.6. PAYMENT: This item will be paid for at the contract unit price bid for "Channel Excavation," which price shall be full compensation for all work herein specified, including the furnishing of all materials, equipment, tools, labor, and incidentals necessary to complete the work as well as the proper disposal of unsuitable materials.

105.7. BID ITEM:

Item 105.1 - Channel Excavation - per cubic yard

ITEM

107 EMBANKMENT

107.1. DESCRIPTION: *Furnish, place, and compact materials for construction of roadways, embankments, levees, dikes, or any designated section of the roadway where additional material is required.*

107.2. MATERIALS: Furnish approved material capable of forming a stable embankment from required excavation in the areas shown on the plans or from sources outside the right of way. Provide material meeting the requirements of Type B unless one or more of the following types is shown on the plans or directed by the Engineer:

A. Type A. Granular material that is free from vegetation or other objectionable material and meets the requirements of Table 1.

Table 1
Testing Requirements

Property	TxDOT Standard Laboratory Test Procedure	Specification Limit
Liquid limit	Tex-104-E	≤ 45
Plasticity index (PI)	Tex-106-E	≤ 15
Bar linear shrinkage	Tex-107-E	≥ 2

The Linear Shrinkage test only needs to be performed as indicated in TxDOT standard laboratory test procedure Tex-104-E.

B. Type B. Materials such as rock, loam, clay, or other approved materials.

C. Type C. Material meeting the specification requirements shown on the plans.

D. Type D. Material from required excavation areas shown on the plans.

Retaining wall backfill material must meet the requirements of the pertinent retaining wall Items.

107.3. EQUIPMENT: Provide applicable equipment to conduct work as described in this specification or as specified on the plans.

107.4. CONSTRUCTION: When offsite sources are used, the Contractor must comply with all Federal, State, County, City, and local laws, ordinances, and regulations pertaining to the work included in this item and demonstrate to the City that all applicable permits, contracts, or other legal documentation are in place prior to use of the offsite borrow source. To allow for required testing, notify the Engineer before opening a material source. Complete preparation of the right of way, in accordance with Item 101, "Preparing Right of Way," for areas to receive embankment.

Backfill tree-stump holes or other minor excavations with approved material and tamp. Restore the ground surface, including any material disked loose or washed out, to its original slope. Compact the ground surface by sprinkling in accordance with TxDOT Item 204, "Sprinkling" and by rolling using equipment complying with Item 210, "Rolling," when directed.

Scarify and loosen the unpaved surface areas, except rock, to a depth of at least 6-inches, unless otherwise shown on the plans. Bench slopes before placing material. Begin placement of material at the toe of slopes. Do not place trees, stumps, roots, vegetation, or other objectionable material in the embankment. Simultaneously recompact scarified material with the placed embankment material. Do not exceed the layer depth specified in Section 107.3.D, "Compaction Methods."

Construct embankments to the grade and sections shown on the plans. Construct the embankment in layers approximately parallel to the finished grade for the full width of the individual roadway cross sections, unless otherwise shown on the plans. Ensure that each section of the embankment conforms to the detailed sections or slopes. Maintain the finished section, density, and grade until the project is accepted.

A. Earth Embankments. Earth embankment is mainly composed of material other than rock. Construct embankments in successive layers, evenly distributing materials in lengths suited for sprinkling and rolling.

Obtain approval to incorporate rock and broken concrete produced by the construction project in the lower layers of the embankment. When the size of approved rock or broken concrete exceeds the layer thickness requirements in Section 107.3.D, "Compaction Methods," place the rock and concrete outside the limits of the completed roadbed. Cut and remove all exposed reinforcing steel from the broken concrete.

Move the material dumped in piles or windrows by blading or by similar methods and incorporate it into uniform layers. Featheredge or mix abutting layers of dissimilar material for at least 100-feet to ensure there are no abrupt changes in the material. Break down clods or lumps of material and mix embankment until a uniform material is attained.

Apply water free of industrial wastes and other objectionable matter to achieve the uniform moisture content specified for compaction.

When ordinary compaction is specified, roll and sprinkle each embankment layer in accordance with Section 107.3.D.1, "Ordinary Compaction." When density control is specified, compact the layer to the required density in accordance with Section 107.3.D.2, "Density Control." When rock and broken concrete are allowed in lower layers of earth embankments, proof-roll these layers as directed where density testing is not possible, in accordance with TxDOT Item 216, "Proof Rolling" to ensure proper compaction.

B. Rock Embankments. Rock embankment is mainly composed of rock. Construct rock embankments in successive layers for the full width of the roadway cross-section with a depth of 18-inches or less. Increase the layer depth for large rock sizes as approved. Do not exceed a depth of 2½ feet in any case. Fill voids created by the large stone matrix with smaller stones during the placement and filling operations.

Ensure the depth of the embankment layer is greater than the maximum dimension of any rock. Do not place rock greater than 2 feet in its maximum dimension, unless otherwise approved. Construct the final layer with graded material so that the density and uniformity is in accordance with Section 107.3.D, "Compaction Methods." Break up exposed oversized material as approved.

When ordinary compaction is specified, roll and sprinkle each embankment layer in accordance with Section 107.3.D.1, "Ordinary Compaction." When density control is specified, compact each layer to the required density in accordance with Section 107.3.D.2,

"Density Control." When directed, proof-roll each rock layer where density testing is not possible, in accordance with TxDOT Item 216, "Proof Rolling" to ensure proper compaction.

C. **Embankments Adjacent to Culverts and Bridges.** Compact embankments adjacent to culverts and bridges in accordance with Item 106, "Box Culvert Excavation and Backfilling."

D. **Compaction Methods.** Begin rolling longitudinally at the sides and proceed toward the center, overlapping on successive trips by at least ½ the width of the roller. On super elevated curves, begin rolling at the lower side and progress toward the high side. Alternate roller trips to attain slightly different lengths. Compact embankments in accordance with one of the following methods as shown on the plans:

1. **Ordinary Compaction.** Use approved rolling equipment complying with Item 210, "Rolling," to compact each layer. The plans or the Engineer may require specific equipment. Do not allow the loose depth of any layer to exceed 12 inches, unless otherwise approved. Before and during rolling operations, bring each layer to the moisture content directed. Compact each layer until there is no evidence of further consolidation. Maintain a level layer to ensure uniform compaction. If the required stability or finish is lost for any reason, recompact and refinish the subgrade at no additional expense to the City.

2. **Density Control.** Compact each layer to the required density using equipment complying with Item 210, "Rolling." Determine the maximum lift thickness based on the ability of the compacting operation and equipment to meet the required density. Do not exceed layer thickness of 12 inches loose material, unless otherwise approved. Maintain a level layer to ensure uniform compaction.

   The Engineer will use TxDOT standard laboratory test procedure Tex-114-E to determine the maximum dry density (D_a) and optimum moisture content (W_{opt}). Meet the requirements for field density and moisture content in Table 2, unless otherwise shown on the plans.

Table 2
Field Density Control Requirements

Description	Density	Moisture Content
	Tex-115-E	
PI ≤ 15	≥ 98% D_a	
15 < PI ≤ 35	≥ 98% D_a and ≤ 102% D_a	≥ $W_{opt.}$
PI > 35	≥ 95% D_a and ≤ 100% D_a	≥ $W_{opt.}$

   Each layer is subject to testing by the Engineer for density and moisture content. During compaction, the moisture content of the soil should not exceed the value shown on the moisture-density curve, above optimum, required to achieve:

   - 98% dry density for soils with a PI greater than 15 but less than or equal to 35 or
   - 95% dry density for soils with PI greater than 35.

   When required, remove small areas of the layer to allow for density tests. Replace the removed material and recompact at no additional expense to the City. Proof-roll in accordance with TxDOT Item 216, "Proof Rolling," when shown on the plans or as directed. Correct soft spots as directed.

E. Maintenance of Moisture and Reworking. Maintain the density and moisture content once all requirements in Table 2 are met. For soils with a PI greater than 15, maintain the moisture content no lower than 4 percentage points below optimum. Rework the material to obtain the specified compaction when the material loses the required stability, density, moisture, or finish. Alter the compaction methods and procedures on subsequent work to obtain specified density as directed.

F. Acceptance Criteria.

1. **Grade Tolerances.**

   a. **Staged Construction.** Grade to within 0.1-foot in the cross-section and 0.1-foot in 16-feet measured longitudinally.

   b. **Turnkey Construction.** Grade to within ½-inch in the cross-section and ½-inch in 16-feet measured longitudinally.

2. **Gradation Tolerances.** When gradation requirements are shown on the plans, material is acceptable when not more than 1 of the 5 most recent gradation tests is outside the specified limits on any individual sieve by more than 5 percentage points.

3. **Density Tolerances.** Compaction work is acceptable when not more than 1 of the 5 most recent density tests is outside the specified density limits, and no test is outside the limits by more than 3 lb. per cubic foot.

4. **Plasticity Tolerances.** Material is acceptable when not more than 1 of the 5 most recent PI tests is outside the specified limit by no more than 2 points.

107.5. MEASUREMENT: Embankment will be measured by the cubic yard. Measurement will be further defined for payment as follows:

A. Final. The cubic yard will be measured in its final position using the average end area method. The volume is computed between the original ground surface or the surface upon which the embankment is to be constructed and the lines, grades, and slopes of the embankment. In areas of salvaged topsoil, payment for embankment will be made in accordance with TxDOT Item 160, "Topsoil." Shrinkage or swell factors will not be considered in determining the calculated quantities.

B. Original. The cubic yard will be measured in its original and natural position using the average end area method.

C. Vehicle. The cubic yard will be measured in vehicles at the point of delivery.

When measured by the cubic yard in its final position, this is a plans quantity measurement Item. The quantity to be paid is the quantity shown in the proposal, unless modified by Change Order. Additional measurements or calculations will be made if adjustments of quantities are required.

Shrinkage or swell factors are the Contractor's responsibility. When shown on the plans, factors are for informational purposes only.

Measurement of retaining wall backfill in embankment areas is paid for as embankment, unless otherwise shown on plans. Limits of measurement for embankment in retaining wall areas are shown on the plans.

107.6. PAYMENT: The work performed and materials furnished in accordance with this Item and measured as provided under "Measurement" will be paid for at the unit price bid for "Embankment (Final)," "Embankment (Original)," or "Embankment (Vehicle)," of the compaction method and type specified. This price is full compensation for furnishing embankment; hauling; placing, compacting, finishing, and reworking; disposal of waste material; and equipment, labor, tools, and incidentals.

When proof rolling is directed, it will be paid for in accordance with TxDOT Item 216, "Proof Rolling."

All sprinkling and rolling, except proof rolling, will not be paid for directly, but will be considered subsidiary to this Item, unless otherwise shown on the plans.

Where subgrade is constructed under this contract, correction of soft spots in the subgrade will be at the Contractor's expense. Where subgrade is not constructed under this contract, correction of soft spots in the subgrade will be paid in accordance through the Change Order process.

107.7. BID ITEM:

Item 107.1 - Embankment (Final) - per cubic yard

Item 107.2 - Embankment (Original) - per cubic yard

Item 107.3 - Embankment (Vehicle) - per cubic yard

ITEM

302 METAL FOR STRUCTURES

302.1. DESCRIPTION: *This item shall govern for materials, such as structural steels, alloy steels, rivet steel, high strength bolts, forgings, steel casting, iron castings, wrought iron, bronze, steel pipe and tubing, aluminum castings and tubing, and other metals used in structures, except reinforcing steel and metal culvert pipe, and for the fabrication and erection of structural steel and other metals, except reinforcing steel, which are used for steel or steel portions of structures.*

302.2. MATERIALS: Provide materials that meet the requirements as set forth below:

A. Metal for Structures. Metal for structures shall comply with the requirements as set forth under the Texas Department of Transportation Standard Specifications Item 442, "Metal for Structures," Subsection 442.2, "Materials" including requirements for materials stated in the latest Special Provision dictated by TxDOT for Statewide use.

B. Paint. Paint shall comply with the requirements as set forth under Item 514, "Paint and Painting."

302.3. EQUIPMENT: Provide the machinery, tools and equipment necessary for proper prosecution of the work. All machinery, tools and equipment used shall be maintained in a satisfactory and workmanlike manner.

302.4. CONSTRUCTION: Construction of "Metal for Structures" shall comply with the requirements as set forth under the Texas Department of Transportation Standard Specifications Item 441, "Steel Structures," Subsection 441.3, "Construction" including requirements for construction stated in the latest Special Provision dictated by TxDOT for Statewide use. Contact the local District office of the Texas Department of Transportation for information pertaining to Subsection 441.3.A.5, "Qualification of Plant, Laboratories, and Personnel." Submit documentation required by Subsection 441.3.A.7, "Welding and Fabrication Procedures" to the City Engineer. Other references to the "Department" and "Engineer" in TxDOT Item 441 shall be deemed to mean the appropriate City Department and the City Engineer or their representative.

302.5. MEASUREMENT: Measurement of the quantity of structural metal furnished and placed will be based on the weight of metal in the fabricated structure. The weight of erection bolts, paint, and all boxes, crates, or other containers used for packing, together with sills, blocking and rods used for supporting or protecting members during transportation shall be excluded. When increases in size or weights of members have been made which were not ordered by the Engineer, but approved by the Engineer, the measurement will be made on the sizes or weights shown on the contract plans.

In determining the weight of structural metal in steel or concrete structures, such items as castings, bearing plates, anchor bolts, drains, deck plates, armor joints, finger joints, and all other metal for which no separate measurement is specified, will be considered as metal for structures.

The weights of rolled shapes and of plates shall be computed on the basis of their nominal weights and dimensions, as shown on the approved shop plans.

The weight of castings will be computed from the dimensions shown on the approved shop drawings. Shoes will be measured by the weights as shown on the standard shoe details, or as specified for castings above, if weights are not shown.

Deductions will be made for all cuts, copes, perforations, and all holes except rivet or bolt holes. The weight of rivet heads will be included for payment. No weight shall be allowed for weld metal.

A change in design which either increases or reduces the quantity of metal going into the structure or structures will be measured by the actual computed weights of the metal, and the quantity as shown on the plans and in the contract, will be increased or decreased by the revised weights, as the case may be.

302.6. PAYMENT: Structural metal will be paid for at the contract unit price bid per pound for "Metal for Structures," or for such other classifications as shown on the plans and in the proposal.

Payment will not be made until shop bills of materials, based on approved shop drawings, indicating total weight of material used have been received and checked by the Engineer.

This price shall be full compensation for furnishing all materials and for all fabrication, shop work, transportation, erection, paint and painting, galvanizing, and for furnishing all equipment tools, labor, and incidentals necessary to complete the work.

302.7. BID ITEM:

Item 302.1 - Metal for Structures - per pound

ITEM

306 STRUCTURAL EXCAVATION

306.1. DESCRIPTION: *Only when indicated on the plan details and bid proposals will this item govern the excavation for the placing of structures, and for the disposal of all material obtained from such excavation, and for backfilling around completed structures to the level of the original ground. The work to be done under this item shall include all necessary pumping or bailing, sheathing, drainage and the removal of all structures or portions thereof, such as wingwalls, pipe culverts, inlets, trees and all other obstructions necessary to the proposed construction.*

306.2. MATERIALS: All structural excavation shall be unclassified, and shall include all materials encountered regardless of their nature or the manner in which they are removed, except those covered by other pay items of the contract. Use materials that meet the requirements of the following Items, when indicated on the plans or required:

A. Flexible Base. Item 200, "Flexible Base."

B. Subgrade Filler. Item 410, "Subgrade Filler."

C. Cement Stabilized Sand. Item 412, "Cement Stabilized Sand."

D. Flowable Fill. Item 413, "Flowable Fill."

E. Filter Fabric. TxDOT DMS 6200, "Filter Fabric," Type1.

306.3. EQUIPMENT: Provide applicable equipment to conduct work as described in this specification or as specified on the plans.

306.4. CONSTRUCTION:

A. Excavation. In instances where the structure is stepped outward near the top, the limits of excavation will be increased accordingly. In all cases where excavation diagrams are shown on the plans, such diagrams shall take precedence over these provisions. Suitable excavated materials shall be utilized, insofar as practicable, in backfilling around the drainage structures or in constructing required embankments, if applicable. Excavated material suitable for backfilling may be stockpiled by the Contractor at points convenient for re-handling, provided stockpiles do not constitute a hazard and all hubs and survey lines are kept free of any obstruction. Unsuitable materials below footing grade shall be removed and replaced with gravel subgrade filler as defined in Item 410, "Subgrade Filler."

Excavated materials which are unsuitable for embankments or backfilling, or excavation in excess of that needed for construction shall become the property of the Contractor and it shall become his sole responsibility to properly dispose of this material outside the limits of the project. Proper disposal shall be in conformance with, but not limited to, the following provisions:

- Do not deposit excavated material within jurisdictional wetlands, and
- Obtain appropriate permits and apply provisions pertaining to soil erosion and stream pollution, when necessary, to meet federal, state, and/or local regulations, rules, and procedures.

1. **Hazardous Materials.** If the Contractor encounters hazardous substances, industrial waste, other environmental pollutants, underground storage tanks, or conditions conducive to environmental damage, Contractor shall immediately stop work in the area affected and report the condition to the Owner's representative in writing. Contractor shall not be responsible for or required to conduct any investigation, site monitoring, containment, cleanup, removal, restoration or other remedial work of any kind or nature (the "remedial work") under any applicable level, state or federal law, regulation or ordinance, or any judicial order. If the Contractor agrees in writing to commence and/or prosecute some or all of the remedial work, all costs and expenses, to include any extension of the contract time, of such remedial work shall be paid by Owner to Contractor as additional compensation.

2. **Existing Structures/Obstructions.** Removal of structures and other obstructions prior to excavation and finishing of all other earthwork described herein shall be completed and paid for in accordance with Item 101, "Preparing Right-of-Way" unless otherwise stated on the plans.

B. Backfilling. Backfilling to the top of the pipe culvert or structure (initial backfill) shall be completed by one of the four methods 1., 2., 3., or 4. below. Backfilling from the top of the culvert to the top of the trench (secondary backfill), or proposed subgrade elevation, shall be completed in accordance with Item 400, "Excavation, Trenching, and Backfilling." Backfill behind cast-in-place culvert walls shall not begin until the concrete has attained a compressive strength of 2,000 psi. Backfill on top of cast-in-place supporting slabs shall not begin until the concrete has attained a compressive strength of 3,000 psi. Avoid wedging action of backfill against structures. If necessary to prevent such action, step or serrate slopes bounding the excavation. Place backfill along both sides of culverts equally and in uniform layers.

1. **Suitable On-Site Excavated Material.** Material for backfill shall be placed in uniform layers not more than 12 inches in depth (loose measurement) and shall be compacted to the density specified herein. Each layer of backfill material, if dry, shall be wetted uniformly to the moisture content required to obtain the specified density and shall be compacted to the required density, by means of a mechanical tamper.

   Each lift of fill shall be compacted to the required density and moisture content as shown below, unless otherwise shown on the plans:

Subgrade Material	**Density**	**Moisture Content**
PI ≤ 20	≥ 95% of Max Dry Density	- 2% of Opt. or greater
PI > 20	≥ 95% of Max Dry Density	≥ Opt. Moisture

   The maximum dry density and optimum moisture content shall be determined in accordance with TxDOT Standard Laboratory Test Method Tex-114-E. Tests for in place

density shall be made in accordance with TxDOT standard laboratory test method Tex-115-E and within 24 hours after compacting operations are completed. If the material fails to meet the density specified, it shall be re-worked as necessary to obtain the density required.

2. **Select Fill.** A clean gravel, or gravel approved by the Engineer, conforming to the requirements of article 410.3.B. "Gravel" of Item No.410, "Subgrade Filler" may be used for backfill material from the bottom of the trench to the top of the conduit. The gravel shall be placed in the trench in loose lifts not to exceed 12 inches in depth and lightly tamped to consolidate and seat the mass against conduit and earthen surfaces.

   A filter fabric shall be placed between the gravel backfill (initial backfill) and secondary backfill. The filter fabric shall conform to the requirements of Texas Department of Transportation Material Specification 6200, Type1. Filter fabric shall be considered incidental to construction and no separate payment for filter fabric will be made.

   Where conditions permit and with approval of the Engineer, material conforming to Item 200, "Flexible Base" may be used from the top of the gravel filter bed to the top of the box culvert. This backfill material shall be placed in uniform layers not more than 12 inches in depth (loose measurement) and shall be compacted to the required density. Each layer of material, if dry, shall be wetted uniformly to the moisture content required to obtain the specified density and shall be compacted to the required density by means of a mechanical tamper.

   Compaction of the Flexible Base shall be such that the density of each layer shall be not less than 95% of the maximum dry density as determined by TxDOT Standard Laboratory Test Method TEX-113-E, unless otherwise shown on the plans.

3. **Controlled Low Strength Material (CLSM).** CLSM shall be placed by direct discharge from a mixer truck or other approved method. A minimum of 30 psi at 3 days and maximum strength of 800 psi at 28 days is required. There is no separate pay item for Controlled Low Strength Material, unless shown on the plans as a separate pay item for culvert backfill.

4. **Flowable Backfill.** When shown on the plans, backfill the excavation with flowable backfill that conforms to Item 413, "Flowable Backfill" to the elevations shown on the plans. Prevent the structure from being displaced during the placement of the flowable backfill and prevent flowable backfill from entering culverts. There is no separate pay item for Flowable Backfill material, unless shown on the plans as a separate pay item for culvert backfill.

C. Quality Control. After each layer of embankment backfill or flexible base is complete, tests as necessary will be made by the Engineer. If the material fails to meet the density specified, the course shall be reworked, as necessary, to obtain the specified compaction.

Should the backfill, due to any reason or cause, lose the required stability, density/moisture, or finish before the next lift is placed, it shall be re-compacted and refinished at the sole expense of the Contractor. Excessive loss of moisture in the backfill shall be prevented by sprinkling or other approved methods.

306.5. MEASUREMENT: Limits of excavation for payment shall be to a vertical plane 1 foot outside and parallel to the footing and will be computed by the method of average end areas. No

measurement will be made of any excavation, made by the Contractor for his convenience, beyond the limits specified above.

306.6. PAYMENT: The work performed as prescribed by this item will be paid for at the unit price bid per cubic yard for "Structural Excavation," which price shall be full compensation for all excavation (within the limits set forth) and backfill including compaction, pumping, bailing, sheathing, bracing, and for furnishing all materials, labor, equipment tools, and incidentals necessary to complete the work.

306.7. BID ITEM:

Item 306.1 - Structural Excavation - per cubic yard

ITEM

307 CONCRETE STRUCTURES

307.1. DESCRIPTION: *Construct concrete structures.*

307.2. MATERIALS:

A. Concrete. Provide concrete conforming to Item 300, "Concrete." For each type of structure or unit, provide the class of concrete shown on the plans or in pertinent governing specifications.

B. Grout or Mortar. Provide grout or mortar conforming to Section 300.2.F, "Mortar and Grout."

C. Latex. Provide an acrylic-polymer latex admixture (acrylic resin emulsion per TxDOT's DMS-4640, "Chemical Admixtures for Concrete") suitable for producing polymer-modified concrete or mortar. Do not allow latex to freeze.

D. Reinforcing Steel. Provide reinforcing steel conforming to Item 301, "Reinforcing Steel."

E. Expansion Joint Material. Provide materials that conform to the requirements of TxDOT's DMS-6310, "Joint Sealants and Fillers":

- Provide preformed fiber expansion joint material that conforms to the dimensions shown on the plans. Provide preformed bituminous fiber material unless otherwise specified.
- Provide a Class 4, 5, or 7 low-modulus silicone sealant unless otherwise directed.
- Provide asphalt board that conforms to dimensions shown on the plans.
- Provide re-bonded neoprene filler that conforms to the dimensions shown on the plans.

F. Waterstop. Provide rubber or polyvinyl chloride (PVC) waterstops that conform to TxDOT's DMS-6160, "Waterstops, Nylon Reinforced Neoprene Sheet, and Elastomeric Pads," unless otherwise shown on the plans.

G. Evaporation Retardants. Provide evaporation retardants that conform to the requirements of TxDOT's DMS-4650, "Hydraulic Cement Concrete Curing Materials and Evaporation Retardants."

H. Curing Materials. Provide membrane curing compounds that conform to the requirements of TxDOT's DMS-4650, "Hydraulic Cement Concrete Curing Materials and Evaporation Retardants."

Provide cotton mats that consist of a filling material of cotton "bat" or "bats" (at least 12 ounces per square yard) completely covered with unsized cloth (at least 6 oz. per square yard) stitched longitudinally with continuous parallel rows of stitching spaced at less than 4 inches, or tuft both longitudinally and transversely at intervals less than 3 inches. Provide cotton mats that are free from tears and in good general condition. Provide a flap at least 6 inches wide consisting of 2 thicknesses of the covering and extending along 1 side of the mat.

Provide polyethylene sheeting that is at least 4 mils thick and free from visible defects. Provide only clear or opaque white sheeting when the ambient temperature during curing exceeds 60°F or when applicable to control temperature during mass pours.

Provide burlap-polyethylene mats made from burlap impregnated on 1 side with a film of opaque white pigmented polyethylene, free from visible defects. Provide laminated mats that have at least 1 layer of an impervious material such as polyethylene, vinyl plastic, or other acceptable material (either as a solid sheet or impregnated into another fabric) and are free of visible defects.

I. Epoxy. Unless otherwise specified, provide epoxy materials that conform to TxDOT's DMS-6100, "Epoxy and Adhesives."

J. Cast Iron Castings. Provide cast iron castings that conform to Item 409, "Cast Iron Castings."

K. Metal for Structures. Provide metal for structures that conform to Item 302, "Metal for Structures."

307.3. EQUIPMENT:

A. Fogging Equipment. Use fogging equipment that can apply water in a fine mist, not a spray. Produce the fog using equipment that pumps water or water and air under high pressure through a suitable atomizing nozzle. Use hand-held mechanical equipment portable enough to use in the direction of any prevailing wind and adaptable for intermittent use to prevent excessive wetting of the concrete.

B. Transporting and Placing Equipment. Use appropriate transporting and placing equipment such as buckets, chutes, buggies, belt conveyors, pumps, or other equipment as necessary. Do not transport or convey concrete through equipment made of aluminum. Use carts with pneumatic tires for carting or wheeling concrete over newly placed slabs.

Use tremies to control the fall of concrete or for underwater placement. Use tremies that are watertight and of large enough diameter to allow the placement of the concrete but less than 14 inches in diameter. For underwater placements, construct the tremie so that the bottom can be sealed and opened once the tremie has been fully charged with concrete.

Use pumps with lines at least 5 inches I.D. where Grade 2 or smaller coarse aggregate is used and at least 8 inches I.D. for Grade 1 coarse aggregate.

C. Vibrators. Use immersion-type vibrators that maintain a speed of 6,000 impulses per minute for consolidation of concrete. Provide at least 1 standby vibrator for emergency use.

D. Screeds and Work Bridges for Bridge Slabs. For bridge slabs use a self-propelled transverse screed or a mechanical longitudinal screed. Use transverse screeds that are able to follow the skew of the bridge for skews greater than 15° unless otherwise approved. Equip transverse screeds with a pan float. Manually operated screeding equipment may be used if approved for top slabs of culverts, small placements, or unusual conditions. Use screeds that are rigid and heavy enough to hold true to shape and have sufficient adjustments to provide for the required camber or section. Equip the screeds, except those of the roller drum type, with metal cutting edges.

For bridge slabs, use sufficient work bridges for finishing operations. Mount a carpet drag to a work bridge or a moveable support system that can vary the area of carpet in contact with the concrete. Use carpet pieces long enough to cover the entire width of the placement. Splice or overlap the carpet as necessary. Confirm that enough carpet is in contact longitudinally with the concrete being placed to provide the desired surface finish. Use artificial grass-type carpeting having a molded polyethylene pile face with a blade length between 5/8 and 1 inch and with a minimum weight of 70 oz. per square yard. Confirm that the carpet has a strong, durable backing not subject to rot and that the facing is adequately bonded to the backing to withstand the intended use. A burlap drag, attached to the pan float on a transverse screed, may be used instead of the carpet drag.

E. Temperature Recording Equipment. For mass concrete operations or as otherwise specified, use strip chart temperature recording devices, recording maturity meters in accordance with TxDOT standard laboratory test procedure Tex-426-A, or other approved devices that are accurate to within ±2°F within the range of 32 to 212°F.

F. Artificial Heating Equipment. Use artificial heating equipment as necessary for maintaining the concrete temperatures as specified in Section 307.4.G.11, "Placing Concrete in Cold Weather."

G. Sawing Equipment. Use sawing equipment capable of cutting grooves in completed bridge slabs and top slabs of direct-traffic culverts. Provide grooves that are 1/8 to 3/16 inch deep and nominally 1/8 inch wide. Groove spacing may range from 5/8 to 1 inch. Use sawing equipment capable of cutting grooves in hardened concrete to within 18 inches of the barrier rail or curb.

H. Spraying Equipment. Use mechanically powered pressure sprayers, either air or airless, with appropriate atomizing nozzles for the application of membrane curing. Mechanically driven spraying equipment, adaptable to the rail system used by the screeds, may be used for applying membrane curing to bridge slabs. If approved, use hand-pressurized spray equipment equipped with 2 or 3 fan-spray nozzles. Confirm that the spray from each nozzle overlaps the spray from adjacent nozzles by approximately 50%.

I. Concrete Testing Equipment. Provide testing equipment for use by the Engineer in accordance with Section 300.3.C, "Testing Equipment."

307.4. CONSTRUCTION: Before starting work, obtain approval for proposed construction methods. Approval of construction methods and equipment does not relieve the Contractor's responsibility for safety or correctness of methods, adequacy of equipment, or completion of work in full accordance with the Contract.

Unless otherwise shown on the plans, it is the Contractor's option to perform testing on structural concrete (structural classes of concrete are identified in Table 5 of Section 300.4.A, "Classification and Mix Design") to determine the in-situ strength to address the schedule restrictions in Section 307.4.A, "Schedule Restrictions." The Engineer may require the Contractor to perform this testing for concrete placed in cold weather. For Contractor-performed testing, make enough test specimens to confirm that strength requirements are met for the operations listed in Section 307.4.A. Make at least 1 set of test specimens for each element cast each day. Cure these specimens under the same conditions as the portion of the structure involved for all stages of construction. Confirm safe handling, curing, and storage of all test specimens. Provide testing personnel, and sample and test the hardened concrete in accordance with Section 300.4.G, "Sampling and Testing of Concrete." The maturity method, TxDOT standard laboratory test

procedure Tex-426-A, may be used for in-situ strength determination for schedule restrictions if approved. Coring will not be allowed for in-situ strength determination for schedule restrictions. Provide the Engineer the opportunity to witness all testing operations. Report all test results to the Engineer.

If the Contractor does not wish to perform schedule restriction testing, the Engineer's 7 day lab-cured tests, performed in accordance with Section 300.4.G.5, "Adequacy and Acceptance of Concrete," will be used for schedule restriction determinations. The Engineer may require additional time for strength gain to account for field curing conditions such as cold weather.

A. **Schedule Restrictions.** Unless otherwise shown on the plans, construct and open completed structures to traffic with the following limitations:

1. **Setting Forms.** Attain at least 2,500 psi compressive strength before erecting forms on concrete footings supported by piling or drilled shafts, or on individual drilled shafts. Erect forms on spread footings and culvert footings after the footing concrete has aged at least 2 curing days as defined in Section 307.4.J, "Curing Concrete." Place concrete only after the forms and reinforcing steel have been inspected by the Engineer.

   Support tie beam or cap forms by falsework on previously placed tie beams only if the tie beam concrete has attained a compressive strength of 2,500 psi and the member is properly supported to eliminate stresses not provided for in the design. Maintain curing as required until completion of the curing period.

   Place superstructure forms or falsework on the substructure only if the substructure concrete has attained a compressive strength of 3,000 psi.

2. **Removal of Forms and Falsework.** Keep in place weight-supporting forms and falsework for bridge components and culvert slabs until the concrete has attained a compressive strength of 2,500 psi in accordance with Section 307.4.K, "Removal of Forms and Falsework." Keep all forms for mass placements defined in Section 307.4.G.14, "Mass Placements," in place for 4 days following concrete placement.

3. **Placement of Superstructure Members.** Do not place superstructure members before the substructure concrete has attained a compressive strength of 3,000 psi.

4. **Longitudinal Screeding of Bridge Slabs.** Place a longitudinal screed directly on previously placed concrete slabs to check and grade an adjacent slab only after the previously placed slab has aged at least 24 hours. Place and screed the concrete after the previously placed slabs have aged at least 48 hours. Maintain curing of the previously placed slabs during placement.

5. **Staged Placement of Bridge Slabs on Continuous Steel Units.** When staged placement of a slab is required, confirm that the previously placed concrete attains a compressive strength of 3,000 psi before placing the next stage placement. Multiple stages may be placed in a single day if approved.

6. **Storage of Materials on the Structure.** Obtain approval to store materials on completed portions of a structure once a compressive strength of 3,000 psi has been attained. Maintain proper curing if materials will be stored on structures before completion of curing.

7. **Placement of Equipment and Machinery.** Do not place erection equipment or machinery on the structure until the concrete has attained the design strength specified in Section 300.4.A, "Classification and Mix Design," unless otherwise approved.

8. **Carting of Concrete.** Once the concrete has attained a compressive strength of 3,000 psi, it may be carted, wheeled, or pumped over completed slabs. Maintain curing during these operations.

9. **Placing Bridge Rails.** Reinforcing steel and concrete for bridge rails may be placed on bridge slabs once the slab concrete has attained a compressive strength of 3,000 psi. If slipforming methods are used for railing concrete, confirm the slab concrete has attained its design strength specified in Section 300.4.A, "Classification and Mix Design," before placing railing concrete.

10. **Opening to Construction Traffic.** Bridges and direct-traffic culverts may be opened to all construction traffic when the design strength specified in Section 300.4.A, "Classification and Mix Design," has been attained if curing is maintained.

11. **Opening to Full Traffic.** Bridges and direct-traffic culverts may be opened to the traveling public when the design strength specified in Section 300.4.A, "Classification and Mix Design," has been attained for all structural elements including railing subject to impact from traffic, when curing has been completed for all slabs, and when the concrete surface treatment has been applied in accordance with TxDOT's Item 428, "Concrete Surface Treatment." Obtain approval before opening bridges and direct-traffic culverts to the traveling public. Other noncritical structural and nonstructural concrete may be opened for service upon the completion of curing unless otherwise specified or directed.

12. **Post-Tensioned Construction.** For structural elements designed to be post-tensioned confirm that strength requirements on the plans are met for stressing and staged loading of structural elements.

13. **Backfilling.** Backfill in accordance with TxDOT's Section 400.3.C, "Backfill."

B. **Plans for Falsework and Forms.** Submit 2 copies of plans for falsework and forms for piers, superstructure spans over 20 feet long, bracing systems for girders when the overhang exceeds 3 feet 6 inches, and bridge widening details. Submit similar plans for other units of the structure as directed. Show all essential details of proposed forms, falsework, and bracing. Have a licensed professional engineer design, seal, and sign these plans. City approval is not required, but the City reserves the right to request modifications to the plans. The Contractor is responsible for the adequacy of these plans.

C. **Falsework.** Design and construct falsework to carry the maximum anticipated loads safely, including wind loads, and to provide the necessary rigidity. Submit details in accordance with Section 307.4.B, "Plans for Falsework and Forms."

Design job-fabricated falsework assuming a weight of 150 pcf for concrete, and include a liveload allowance of 50 psf of horizontal surface of the form. Do not exceed 125% of the allowable stresses used by the City for the design of structures.

For commercially produced structural units used in falsework, do not exceed the manufacturer's maximum allowable working loads for moment and shear or end reaction.

Include a liveload allowance of 35 psf of horizontal form surface in determining the maximum allowable working load for commercially produced structural units.

Provide timber that is sound, in good condition, and free from defects that would impair its strength. Provide timber that meets or exceeds the species, size, and grade requirements in the submitted falsework plans.

Provide wedges made of hardwood or metal in pairs to adjust falsework to desired elevations to confirm even bearing. Do not use wedges to compensate for incorrectly cut bearing surfaces.

Use sills or grillages that are large enough to support the superimposed load without settlement. Take precautions to prevent settling of the supporting material unless the sills or grillages are founded on solid rock, shale, or other hard materials.

Place falsework that cannot be founded on a satisfactory spread footing on piling or drilled shafts with enough bearing capacity to support the superimposed load without settlement. Drive falsework piling to the required resistance determined by the applicable formula in TxDOT Item 404, "Driving Piling." Design drilled shafts for falsework to carry the superimposed load using both skin friction and point bearing.

Weld in conformance with TxDOT Item 448, "Structural Field Welding." Securely brace each falsework bent to provide the stiffness required, and securely fasten the bracing to each pile or column it crosses.

Remove falsework when it is no longer required or as indicated on the submitted falsework plan. Pull or cut off foundations for falsework at least 2 feet below finished ground level. Completely remove falsework, piling, or drilled shafts in a stream, lake, or bay to the approved limits to prevent obstruction to the waterway.

D. Forms. Submit formwork plans in accordance with Section 307.4.B, "Plans for Falsework and Forms."

1. General. Except where otherwise specified or permitted, provide forms of either timber or metal.

Design forms for the pressure exerted by a liquid weighing 150 pcf. Take the rate of concrete placement into consideration in determining the depth of the equivalent liquid. Include a liveload allowance of 50 psf of horizontal surface for job-fabricated forms. Do not exceed 125% of the allowable stresses used by the City for the design of structures.

For commercially produced structural units used for forms, do not exceed the manufacturer's maximum allowable working loads for moment and shear or end reaction. Include a liveload allowance of 35 psf of horizontal form surface in determining the maximum allowable working load for commercially produced structural units.

Provide steel forms for round columns unless otherwise approved. Refer to Item 311, "Concrete Surface Finish," for additional requirements for off-the-form finishes.

Provide commercial form liners for imprinting a pattern or texture on the concrete surface as shown on the plans and specified in TxDOT's Section 427.4.B.2.d, "Form Liner Finish."

Provide forming systems that are practically mortar-tight, rigidly braced, and strong enough to prevent bulging between supports, and maintain them to the proper line and grade during concrete placement. Maintain forms in a manner that prevents warping and shrinkage. Do not allow offsets at form joints to exceed 1/16 inch.

For forms to be left in place, use only material that is inert, non-biodegradable, and non-absorptive.

Attachment of forms or screed supports for bridge slabs to steel I beams or girders may be by welding subject to the following requirements:

- Do not weld to tension flanges or to areas indicated on the plans.
- Weld in accordance with Item 448, "Structural Field Welding."

Take into account:

- deflections due to cast-in-place slab concrete and railing shown in the dead load deflection diagram in the setting of slab forms,
- differential beam or girder deflections due to skew angles and the use of certain stay-in-place slab forming systems, and
- deflection of the forming system due to the wet concrete.

For bridge approach slabs, securely stake forms to line and grade and maintain in position. Rigidly attach inside forms for curbs to the outside forms.

Construct all forms to permit their removal without marring or damaging the concrete. Clean all forms and footing areas of any extraneous matter before placing concrete. Provide openings in forms if needed for the removal of laitance or foreign matter

Treat the facing of all forms with bond-breaking coating of composition that will not discolor or injuriously affect the concrete surface. Take care to prevent coating of the reinforcing steel.

Complete all preparatory work before requesting permission to place concrete.

If the forms show signs of bulging or sagging at any stage of the placement, cease placement and remove the portion of the concrete causing this condition immediately if necessary. Reset the forms and securely brace them against further movement before continuing the placement.

2. **Timber Forms.** Provide properly seasoned good-quality lumber that is free from imperfections that would affect its strength or impair the finished surface of the concrete. Provide timber or lumber that meets or exceeds the requirements for species and grade in the submitted formwork plans.

   Maintain forms or form lumber that will be reused so that it stays clean and in good condition. Do not use any lumber that is split, warped, bulged, or marred or that has defects that will produce inferior work, and promptly remove such lumber from the work.

   Provide form lining for all formed surfaces except:

- the inside of culvert barrels, inlets, manholes, and box girders;
- the bottom of bridge slabs between beams or girders;
- surfaces that are subsequently covered by backfill material or are completely enclosed; and
- any surface formed by a single finished board or by plywood.

Provide form lining of an approved type such as masonite or plywood. Do not provide thin membrane sheeting such as polyethylene sheets for form lining.

Use plywood at least ¾ inch thick. Place the grain of the face plies on plywood forms parallel to the span between the supporting studs or joists unless otherwise indicated on the submitted form drawings.

Use plywood for forming surfaces that remain exposed that meets the requirements for B-B Plyform Class I or Class II Exterior of the U.S. Department of Commerce Voluntary Product Standard PS 1.

Space studs and joists so that the facing form material remains in true alignment under the imposed loads.

Space wales closely enough to hold forms securely to the designated lines, scabbed at least 4 feet on each side of joints to provide continuity. Place a row of wales near the bottom of each placement.

Place facing material with parallel and square joints, securely fastened to supporting studs.

For surfaces exposed to view and receiving only an ordinary surface finish as defined in Section 307.4.M, "Ordinary Surface Finish," place forms with the form panels symmetrical (long dimensions set in the same direction). Make horizontal joints continuous.

Make molding for chamfer strips or other uses of materials of a grade that will not split when nailed and that can be maintained to a true line without warping. Dress wood molding on all faces. Unless otherwise shown on the plans, fill forms at all sharp corners and edges with triangular chamfer strips measuring 3/4 inch on the sides.

To hold forms in place, use metal form ties of an approved type or a satisfactory substitute of a type that permits ease of removal of the metal. Cut back wire ties at least ½ inch from the face of the concrete.

Use devices to hold metal ties in place that are able to develop the strength of the tie and adjust to allow for proper alignment.

Entirely remove metal and wooden spreaders that separate the forms as the concrete is being placed.

Provide adequate clean-out openings for narrow walls and other locations where access to the bottom of the forms is not readily attainable.

3. **Metal Forms.** Requirements for timber forms regarding design, mortar-tightness, filleted corners, beveled projections, bracing, alignment, removal, reuse, and wetting also apply to metal forms except that metal forms do not require lining unless specifically noted on the plans.

   Use form metal thick enough to maintain the true shape without warping or bulging. Countersink all bolt and rivet heads on the facing sides. Design clamps, pins, or other connecting devices to hold the forms rigidly together and to allow removal without damage to the concrete. Use metal forms that present a smooth surface and that line up properly. Keep metal free from rust, grease, and other foreign materials.

4. **Form Supports for Overhang Slabs.** Form supports that transmit a horizontal force to a steel girder or beam or to a prestressed concrete beam are permitted provided a satisfactory structural analysis has been made of the effect on the girder or beam as indicated in the submitted formwork plans.

   When overhang brackets are used on prestressed concrete beam spans with slab overhangs not exceeding 3 feet 6 inches, use beam bracing as indicated in the plans. For spans with overhangs exceeding this amount, use additional support for the outside beams regardless of the type of beam used. Submit details of the proposed bracing system in accordance with Section 307.4.B, "Plans for Falsework and Forms."

   Punch or drill holes full size in the webs of steel members for support of overhang brackets, or torch-cut them to 1/4 inch under size and ream them full size. Do not burn the holes full size. Leave the holes open unless otherwise shown on the plans. Never fill the holes by welding.

E. Drains. Install and construct weep holes and roadway drains as shown on the plans.

F. Placing Reinforcement. Place reinforcement as provided in Item 301, "Reinforcing Steel." Do not weld reinforcing steel supports to I beams or girders or to reinforcing steel except where shown on the plans.

Place post-tensioning ducts in accordance with the approved prestressing details and in accordance with TxDOT's Item 426, "Prestressing." Keep ducts free of obstructions until all post-tensioning operations are complete.

G. Placing Concrete. Give the Engineer sufficient advance notice before placing concrete in any unit of the structure to permit the inspection of forms, reinforcing steel placement, and other preparations.

Follow the sequence of placing concrete shown on the plans or specified.

Do not place concrete when impending weather conditions would impair the quality of the finished work. If conditions of wind, humidity, and temperature are such that concrete cannot be placed without the potential for shrinkage cracking, place concrete in early morning or at night or adjust the placement schedule for more favorable weather. Consult the evaporation rate nomograph in the Portland Cement Association's Design and Control of Concrete Mixtures for shrinkage cracking potential. When mixing, placing, and finishing concrete in non-daylight hours, adequately illuminate the entire placement site as approved.

If changes in weather conditions require protective measures after work starts, furnish adequate shelter to protect the concrete against damage from rainfall or from freezing temperatures as outlined in this Item. Continue operations during rainfall only if approved. Use protective coverings for the material stockpiles. Cover aggregate stockpiles only to the extent necessary to control the moisture conditions in the aggregates.

Allow at least 1 curing day after the concrete has achieved initial set before placing strain on projecting reinforcement to prevent damage to the concrete.

1. **Placing Temperature.** Place concrete according to the following temperature limits for the classes of concrete defined in Section 300.4.A, "Classification and Mix Design":

   - Place Class C, F, H, K, or SS concrete only when its temperature at time of placement is between 50 and 95°F. Increase the minimum placement temperature to 60°F if ground-granulated blast furnace (GGBF) slag is used in the concrete.

   - When used in a bridge slab or in the top slab of a direct-traffic culvert, place Class CO, DC, or S concrete only when its temperature at the time of placement is between 50 and 85°F. Increase the minimum placement temperature to 60°F if GGBF slag is used in the concrete. The maximum temperature increases to 95°F if these classes are used for other applications.

   - Place Class A, B, and D concrete only when its temperature at the time of placement is greater than 50°F.

   - Place mass concrete, defined by Section 307.4.G.14, "Mass Placements," only when its temperature at the time of placement is between 50 and 75°F.

2. **Transporting Time.** Place concrete delivered in agitating trucks within 60 minutes after batching. Place concrete delivered in non-agitating equipment within 45 minutes after batching. Revise the concrete mix design as necessary for hot weather or other conditions that contribute to quick setting of the concrete. Submit for approval a plan to demonstrate that these time limitations can be extended while ensuring the concrete can be properly placed, consolidated, and finished without the use of additional water.

3. **Workability of Concrete.** Place concrete with a slump as specified in Section 300.4.A.5, "Slump." Concrete that exceeds the maximum slump will be rejected. Water may be added to the concrete before discharging any concrete from the truck to adjust for low slump provided that the maximum mix design water–cement ratio is not exceeded. After introduction of any additional water or chemical admixtures, mix concrete in accordance with Section 300.4.E, "Mixing and Delivering Concrete." Do not add water or chemical admixtures after any concrete has been discharged.

4. **Transporting Concrete.** Use a method and equipment capable of maintaining the rate of placement shown on the plans or required by this Item to transport concrete to the forms. Transport concrete by buckets, chutes, buggies, belt conveyors, pumps, or other methods.

   Protect concrete transported by conveyors from sun and wind to prevent loss of slump and workability. Shade or wrap with wet burlap pipes through which concrete is pumped as necessary to prevent loss of slump and workability.

Arrange and use chutes, troughs, conveyors, or pipes so that the concrete ingredients will not be separated. When necessary to prevent segregation, terminate such equipment in vertical downspouts. Extend open troughs and chutes, if necessary, down inside the forms or through holes left in the forms.

Keep all transporting equipment clean and free from hardened concrete coatings. Discharge water used for cleaning clear of the concrete.

5. **Preparation of Surfaces.** Thoroughly wet all forms, prestressed concrete panels, T beams, and concrete box beams on which concrete is to be placed before placing concrete on them. Remove any remaining puddles of excess water before placing concrete. Provide surfaces that are in a moist, saturated surface-dry condition when concrete is placed on them.

   Confirm that the subgrade or foundation is moist before placing concrete for bridge approach slabs or other concrete placed on grade. Lightly sprinkle the subgrade if dry.

6. **Expansion Joints.** Construct joints and devices to provide for expansion and contraction in accordance with plan details and the requirements of this Section and TxDOT's Item 454, "Bridge Expansion Joints."

   Prevent bridging of concrete or mortar around expansion joint material in bearings and expansion joints.

   Use forms adaptable to loosening or early removal in construction of all open joints and joints to be filled with expansion joint material. To avoid expansion or contraction damage to the adjacent concrete, loosen these forms as soon as possible after final concrete set to permit free movement of the span without requiring full form removal.

   When the plans show a Type A joint, provide preformed fiber joint material in the vertical joints of the roadway slab, curb, median, or sidewalk, and fill the top 1 inch with the specified joint sealing material unless noted otherwise. Install the sealer in accordance with TxDOT's Item 438, "Cleaning and Sealing Joints and Cracks (Rigid Pavement and Bridge Decks)," and the manufacturer's recommendations.

   Use light wire or nails to anchor any preformed fiber joint material to the concrete on 1 side of the joint.

   Confirm that finished joints conform to the plan details with the concrete sections completely separated by the specified opening or joint material.

   Remove all concrete within the joint opening soon after form removal and again where necessary after surface finishing to confirm full effectiveness of the expansion joint.

7. **Construction Joints.** A construction joint is the joint formed by placing plastic concrete in direct contact with concrete that has attained its initial set. Monolithic placement means that the manner and sequence of concrete placing does not create a construction joint.

   Make construction joints of the type and at the locations shown on the plans. Do not make joints in bridge slabs not shown on the plans unless approved. Additional joints in

other members are not permitted without approval. Place authorized additional joints using details equivalent to those shown on the plans for joints in similar locations.

Unless otherwise required, make construction joints square and normal to the forms. Use bulkheads in the forms for all vertical joints.

Thoroughly roughen the top surface of a concrete placement terminating at a horizontal construction joint as soon as practical after initial set is attained.

Thoroughly clean the hardened concrete surface of all loose material, laitance, dirt, and foreign matter, and saturate it with water. Remove all free water and moisten the surface before concrete or bonding grout is placed against it.

Draw forms tight against the existing concrete to avoid mortar loss and offsets at joints.

Coat the joint surface with bonding mortar, grout, epoxy, or other material as indicated in the plans or other Items. Provide Type V epoxy per TxDOT's DMS-6100, "Epoxies and Adhesives," for bonding fresh concrete to hardened concrete. Place the bonding epoxy on a clean, dry surface, and place the fresh concrete while the epoxy is still tacky. Place bonding mortar or grout on a surface that is saturated surface-dry, and place the concrete before the bonding mortar or grout dries. Place other bonding agents in accordance with the manufacturer's recommendations.

8. **Handling and Placing.** Minimize segregation of the concrete and displacement of the reinforcement when handling and placing concrete. Produce a uniform dense compact mass.

   Do not allow concrete to free-fall more than 5 feet except in the case of drilled shafts, thin walls such as in culverts, or as allowed by other Items. Remove any hardened concrete splatter ahead of the plastic concrete.

   Fill each part of the forms by depositing concrete as near its final position as possible. Do not deposit large quantities at 1 point and run or work the concrete along the forms.

   Deposit concrete in the forms in layers of suitable depth but not more than 36 inches deep unless otherwise permitted.

   Avoid cold joints in a monolithic placement. Sequence successive layers or adjacent portions of concrete so that they can be vibrated into a homogeneous mass with the previously placed concrete before it sets. When re-vibration of the concrete is shown on the plans, allow at most 1 hour to elapse between adjacent or successive placements of concrete except as otherwise allowed by an approved placing procedure. This time limit may be extended by ½ hour if the concrete contains at least a normal dosage of retarding admixture.

   Use an approved retarding agent to control stress cracks and cold joints in placements where differential settlement and setting time may induce cracking.

9. **Consolidation.** Carefully consolidate concrete and flush mortar to the form surfaces with immersion type vibrators. Do not use vibrators that operate by attachment to forms or reinforcement except where approved on steel forms.

Vibrate the concrete immediately after deposit. Systematically space points of vibration to confirm complete consolidation and thorough working of the concrete around the reinforcement, embedded fixtures, and into the corners and angles of the forms. Insert the vibrator vertically where possible except for slabs where it may be inserted in a sloping or horizontal position. Vibrate the entire depth of each lift, allowing the vibrator to penetrate several inches into the preceding lift. Do not use the vibrator to move the concrete to other locations in the forms. Do not drag the vibrator through the concrete. Thoroughly consolidate concrete along construction joints by operating the vibrator along and close to but not against the joint surface. Continue the vibration until the concrete surrounding reinforcements and fixtures is completely consolidated. Hand-spade or rod the concrete if necessary to confirm flushing of mortar to the surface of all forms.

10. **Installation of Dowels and Anchor Bolts.** Install dowels and anchor bolts by casting them in-place or by grouting with grout, epoxy, or epoxy mortar unless noted otherwise. Form or drill holes for grouting.

    Drill holes for anchor bolts to accommodate the bolt embedment required by the plans. Make holes for dowels at least 12 inches deep unless otherwise shown on the plans. When using grout or epoxy mortar, make the diameter of the hole at least twice the dowel or bolt diameter, but the hole need not exceed the dowel or bolt diameter plus 1 1/2 inches. When using epoxy, make the hole diameter 1/16 to 1/4 inch greater than the dowel or bolt diameter.

    Thoroughly clean holes of all loose material, oil, grease, or other bond-breaking substance, and blow them clean with filtered compressed air. Confirm that holes are in a surface dry condition when epoxy type material is used and in a surface moist condition when hydraulic cement grout is used. Develop and demonstrate for approval a procedure for cleaning and preparing the holes for installation of the dowels and anchor bolts. Completely fill the void between the hole and dowel or bolt with grouting material. Follow exactly the requirements for cleaning outlined in the product specifications for prepackaged systems.

    For cast-in-place or grouted systems, provide hydraulic cement grout in accordance with Section 300.2.F, "Mortar and Grout," epoxy, epoxy mortar, or other prepackaged grouts as approved. Provide a Type III epoxy per TxDOT's DMS-6100, "Epoxies and Adhesives," when neat epoxy is used for anchor bolts or dowels. Provide Type VIII epoxy per TxDOT's DMS-6100 when an epoxy grout is used. Provide grout, epoxy, or epoxy mortar as the binding agent unless otherwise indicated on the plans.

    Provide other anchor systems as required in the plans.

11. **Placing Concrete in Cold Weather.** Protect concrete placed under weather conditions where weather may adversely affect results. Permission given by the Engineer for placing during cold weather does not relieve the Contractor of responsibility for producing concrete equal in quality to that placed under normal conditions. If concrete placed under poor conditions is unsatisfactory, remove and replace it as directed at Contractor's expense.

    Do not place concrete in contact with any material coated with frost or having a temperature of 32°F or lower. Do not place concrete when the ambient temperature in the shade is below 40°F and falling unless approved. Concrete may be placed when the ambient temperature in the shade is 35°F and rising or above 40°F.

Provide and install recording thermometers, maturity meters, or other suitable temperature measuring devices to verify that all concrete is effectively protected as follows:

- Maintain the temperature of the top surface of bridge slabs and top slabs of direct-traffic culverts at 50°F or above for 72 hours from the time of placement and above 40°F for an additional 72 hours.

- Maintain the temperature at all surfaces of concrete in bents, piers, culvert walls, retaining walls, parapets, wingwalls, bottoms of bridge slab or culvert top slabs, and other similar formed concrete at 40°F or above for 72 hours from the time of placement.

- Maintain the temperature of all other concrete, including the bottom slabs (footings) of culverts, placed on or in the ground above 32°F for 72 hours from the time of placement.

Use additional covering, insulated forms, or other means and, if necessary, supplement the covering with artificial heating. Avoid applying heat directly to concrete surfaces. Cure as specified in Section 307.4.J, "Curing Concrete," during this period until all requirements for curing have been satisfied.

When impending weather conditions indicate the possible need for temperature protection, have on hand all necessary heating and covering material, ready for use, before permission is granted to begin placement.

12. **Placing Concrete in Hot Weather.** Use an approved retarding agent in all concrete for superstructures and top slabs of direct-traffic culverts, except concrete containing GGBF slag, when the temperature of the air is above 85°F unless otherwise directed.

    Keep the concrete at or below the maximum temperature at time of placement as specified in Section 307.4.G.1, "Placing Temperature." Sprinkle and shade aggregate stockpiles or use ice, liquid nitrogen systems, or other approved methods as necessary to control the concrete temperature.

13. **Placing Concrete in Water.** Deposit concrete in water only when shown on the plans or with approval. Make forms or cofferdams tight enough to prevent any water current passing through the space in which the concrete is being deposited. Do not pump water during the concrete placing or until the concrete has set for at least 36 hours.

    Place the concrete with a tremie or pump, or use another approved method, and do not allow it to fall freely through the water or disturb it after it is placed. Keep the concrete surface approximately level during placement.

    Support the tremie or operate the pump so that it can be easily moved horizontally to cover all the work area and vertically to control the concrete flow. Submerge the lower end of the tremie or pump hose in the concrete at all times. Use continuous placing operations until the work is complete.

    For concrete to be placed under water, design the concrete mix in accordance with Item 300, "Concrete," with a minimum cement content of 650 pounds per cubic yard. Include

an anti-washout admixture in the mix design as necessary to produce a satisfactory finished product.

14. **Mass Placements.** Mass placements are defined as placements with a least dimension greater than or equal to 5 feet, or designated on the plans. For monolithic mass placements, develop and obtain approval for a plan to confirm the following during the heat dissipation period:

    - the temperature differential between the central core of the placement and the exposed concrete surface does not exceed 35°F and
    - the temperature at the central core of the placement does not exceed 160°F.

    Base this plan on the equations given in the Portland Cement Association's Design and Control of Concrete Mixtures. Cease all mass placement operations and revise the plan as necessary if either of the above limitations is exceeded.

    Include a combination of the following elements in this plan:

    - selection of concrete ingredients including aggregates, gradation, and cement types, to minimize heat of hydration;
    - use of ice or other concrete cooling ingredients;
    - use of liquid nitrogen dosing systems;
    - controlling rate or time of concrete placement;
    - use of insulation or supplemental external heat to control heat loss;
    - use of supplementary cementing materials; or
    - use of a cooling system to control the core temperature.

    Furnish and install 2 sets of temperature recording devices, maturity meters, or other approved equivalent devices at designated locations. Use these devices to simultaneously measure the temperature of the concrete at the core and the surface. Maintain temperature control methods for 4 days unless otherwise approved. Maturity meters may not be used to predict strength of mass concrete.

15. **Placing Concrete in Foundation and Substructure.** Do not place concrete in footings until the depth and character of the foundation has been inspected and permission has been given to proceed by the Engineer.

    Placing of concrete footings upon seal concrete is permitted after the cofferdams are free from water and the seal concrete cleaned. Perform any necessary pumping or bailing during the concreting from a suitable sump located outside the forms.

    Construct or adjust all temporary wales or braces inside cofferdams as the work proceeds to prevent unauthorized construction joints.

When footings can be placed in a dry excavation without the use of cofferdams, omit forms if approved, and fill the entire excavation with concrete to the elevation of the top of footing.

Place concrete in columns monolithically between construction joints unless otherwise directed. Columns and caps or tie beams supported on them may be placed in the same operation or separately. If placed in the same operation, allow for settlement and shrinkage of the column concrete by placing it to the lower level of the cap or tie beam, and delay placement between 1 and 2 hours before proceeding with the cap or tie beam placement.

16. **Placing Concrete in Box Culverts.** Where the top slab and walls are placed monolithically in culverts more than 4 feet in clear height, allow between 1 and 2 hours to elapse before placing the top slab to allow for settlement and shrinkage in the wall concrete.

    Accurately finish the footing slab at the proper time to provide a smooth uniform surface. Finish top slabs that carry direct-traffic as specified in this Item. Give top slabs of fill type culverts a float finish.

17. **Placing Concrete in Superstructure.** Unless otherwise shown on the plans, place simple span bridge slabs without transverse construction joints by using either a self-propelled transverse finishing machine or a mechanical longitudinal screed. For small placements or for unusual conditions such as narrow widening, variable cross slopes, or transitions, use of manually operated screeding equipment may be permitted. Support the screed adequately on a header or rail system stable enough to withstand the longitudinal or lateral thrust of the equipment. Adjust the profile grade line as necessary to account for variations in beam camber and other factors to obtain the required slab thickness and concrete cover over the slab reinforcement. Set beams and verify their surface elevations in a sufficient number of spans so that when adjustment is necessary, the profile grade line can be adjusted over suitable increments to produce a smooth riding surface. Take dead load deflection into account in setting the grades of headers and rail systems. Use construction joints, when required or permitted for slab placements on steel or prestressed concrete beams, as shown on the plans. Before placing concrete on steel girder or truss spans, release falsework under the spans and swing the spans free on their permanent supports.

    Make 1 or more passes with the screed over the bridge slab segment before placing concrete on it to confirm proper operation and maintenance of grades and clearances. Use an approved system of checking to detect any vertical movement of the forms or falsework. Maintain forms for the bottom surface of concrete slabs, girders, and overhangs to the required vertical alignment during concrete placing.

    Fog unformed surfaces of slab concrete in bridge slabs and in top slabs of direct-traffic culverts from the time of initial strikeoff of the concrete until finishing is completed and required interim curing is in place. Do not use fogging as a means to add finishing water, and do not work moisture from the fog spray into the fresh concrete.

    For simple spans, retard the concrete only if necessary to complete finishing operations or as required by this Section. When filling curb forms, bring the top of curb and sidewalk section to the correct camber and alignment, and finish them as described in this Item.

a. **Transverse Screeding.** Install rails for transverse finishing machines that are supported from the beams or girders so that the supports may be removed without damage to the slab. Prevent bonding between removable supports and the concrete in an acceptable manner. Do not allow rail support parts that remain embedded in the slab to project above the upper mat of reinforcing steel. Rail or screed supports attached to I beams or girders are subject to the requirements of this Item. Unless otherwise shown on the plans, for transverse screeding the minimum rate of concrete placement is 30 linear feet of bridge slab per hour. Deposit concrete parallel to the skew of the bridge so that all girders are loaded uniformly along their length. Deposit slab concrete between the exterior beam and the adjacent beam before placing concrete in the overhang portion of the slab. Furnish personnel and equipment capable of placing, finishing, and curing the slab at an acceptable rate to confirm compliance with the specifications. Place concrete in transverse strips. On profile grades greater than 1½%, start placement at the lowest end.

b. **Longitudinal Screeding.** Unless otherwise shown on the plans, use of temporary intermediate headers will be permitted for placements over 50 feet long if the rate of placement is rapid enough to prevent a cold joint and if these headers are designed for easy removal to permit satisfactory consolidation and finish of the concrete at their locations. Deposit slab concrete between the exterior beam and the adjacent beam before placing concrete in the overhang portion of the slab. Place concrete in longitudinal strips starting at a point in the center of the segment adjacent to 1 side except as this Section indicates, and complete the strip by placing uniformly in both directions toward the ends. For spans on a profile grade of 1½% or more, start placing at the lowest end. Use strips wide enough that the concrete within each strip remains plastic until placement of the adjacent strip. Where monolithic curb construction is specified, place the concrete in proper sequence to be monolithic with the adjacent longitudinal strips of the slabs.

c. **Placements on Continuous Steel Units.** Unless otherwise shown on the plans, place slabs on continuous steel units in a single continuous operation without transverse construction joints using a self-propelled transverse finishing machine or a mechanical longitudinal screed. Retard the initial set of the concrete sufficiently to confirm that concrete remains plastic in at least 3 spans immediately preceding the slab being placed. Use construction joints, when required for slab placements on steel beams or girders, as shown on the plans. When staged placement of a slab is required in the plans, confirm that the previously placed concrete attains a compressive strength of 3,000 psi before placing the next stage concrete. Multiple stages may be placed in a single day if approved. Where plans permit staged placing without specifying a particular order of placement, use an approved placing sequence that will not overstress of any of the supporting members.

d. **Slab and Girder Units.** Unless otherwise shown on the plans, place girders, slab, and curbs of slab and girder spans monolithically. Fill concrete girder stems first, and place the slab concrete within the time limits specified in this Item. If using a transverse screed, place concrete in the stems for a short distance and then place the concrete in transverse strips. If using a longitudinal screed, fill the outside girder stem first, beginning at the low end or side, and continue placement in longitudinal strips.

H. Treatment and Finishing of Horizontal Surfaces Other Than Bridge Slabs. Strike off to grade and finish all unformed upper surfaces. Do not use mortar topping for surfaces constructed under this Section.

After the concrete has been struck off, float the surface with a suitable float. Give bridge sidewalks a wood float or broom finish, or stripe them with a brush.

Slightly slope the tops of caps and piers between bearing areas from the center toward the edge, and slope the tops of abutment and transition bent caps from the backwall to the edge, as directed, so that water drains from the surface. Give the concrete a smooth trowel finish. Construct bearing areas for steel units in accordance with TxDOT's Section 441.3.K.5, "Bearing and Anchorage Devices." Give the bearing area under the expansion ends of concrete slabs and slab and girder spans a steel-trowel finish to the exact grades required. Give bearing areas under elastomeric bearing pads or nonreinforced bearing seat buildups a textured, wood float finish. Do not allow the bearing area to vary from a level plane more than 1/16 inch in all directions.

Cast bearing seat buildups or pedestals for concrete units integrally with the cap or with a construction joint. Provide a latex-based mortar, an epoxy mortar, or an approved proprietary bearing mortar for bearing seat buildups cast with a construction joint. Mix mortars in accordance with the manufacturer's recommendations. Construct pedestals of Class C concrete, reinforced as shown on the plans or as indicated in Figure 1 and Figure 2.

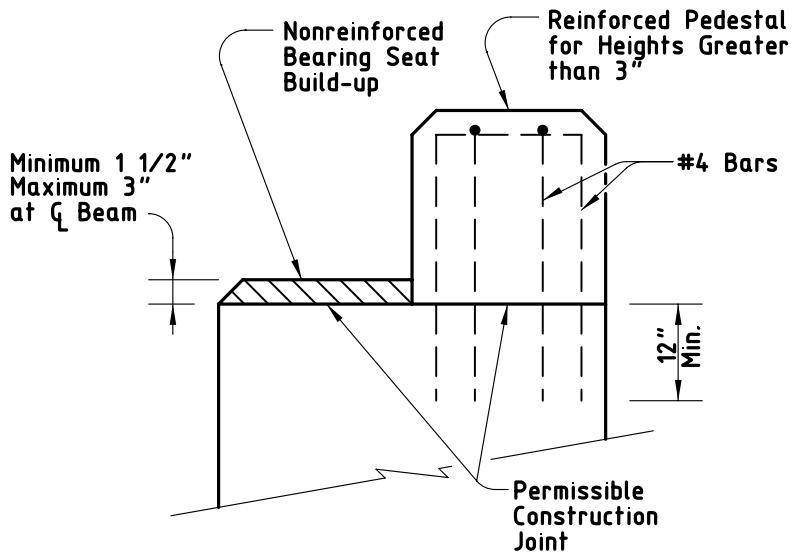

Figure 1
Section through bearing seat buildups.

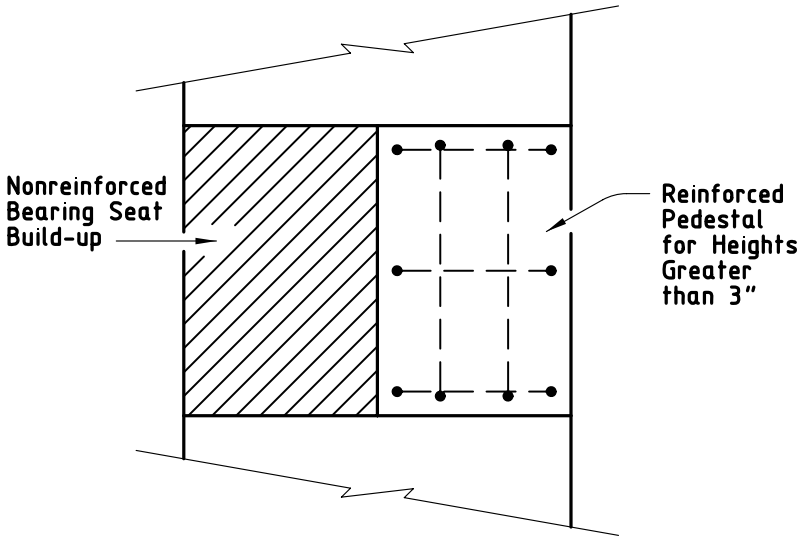

Figure 2
Plan view of bearing seat buildups.

I. **Finish of Bridge Slabs.** Provide camber for specified vertical curvature and transverse slopes.

For concrete flat slab and concrete slab and girder spans cast in place on falsework, provide additional camber to offset the initial and final deflections of the span as indicated in the plans. For concrete slab and girder spans using pan forms, provide camber of approximately 3/8 inch for 30 foot spans and 1/2 inch for 40 foot spans to offset initial and final deflections unless otherwise directed. For concrete flat slab and concrete slab and girder spans not using pan forms, when dead load deflection is not shown on the plans, provide a camber of 1/8 inch per 10 feet of span length but no more than 1/2 inch

Provide a camber of 1/4 inch in addition to deflection for slabs without vertical curvature on steel or prestressed concrete beams.

Use work bridges or other suitable facilities to perform all finishing operations and to provide access, if necessary, for the Engineer to check measurements for slab thickness and reinforcement cover.

As soon as the concrete has been placed and vibrated in a section wide enough to permit working, level, strike off, and screed the surface, carrying a slight excess of concrete ahead of the screed to fill all low spots.

Move longitudinal screeds across the concrete with a saw-like motion while their ends rest on headers or templates set true to the roadway grade or on the adjacent finished slab. Move transverse screeds longitudinally approximately 1/5 of the drum length for each complete out-and-back pass of the carriage.

Screed the surface of the concrete enough times and at intervals to produce a uniform surface true to grade and free of voids.

Work the screeded surface to a smooth finish with a long-handled wood or metal float or hand-float it from work bridges over the slab. Floating may not be necessary if the pan float attached to a transverse screed produces an acceptable finish. Avoid overworking the surface of the concrete. Avoid overuse of finish water.

Perform sufficient checks, witnessed by the Engineer, with a long-handled 16 foot straightedge on the plastic concrete to confirm that the final surface will be within specified tolerances. Make the check with the straightedge parallel to the centerline. Lap each pass half over the preceding pass. Remove all high spots, and fill and float all depressions over 1/16 inch deep with fresh concrete. Continue checking and floating until the surface is true to grade and free of depressions, high spots, voids, or rough spots. Fill screed-rail support holes with concrete, and finish them to match the top of the slab.

Finish the concrete surface to a uniform texture using a carpet drag, burlap drag, or broom finish. Finish the surface to a smooth sandy texture without blemishes, marks, or scratches deeper than 1/16 inch. Apply the surface texturing using a work bridge or platform immediately after completing the straightedge checks. Draw the carpet or burlap drag longitudinally along the concrete surface, adjusting the surface contact area or pressure to provide a satisfactory coarsely textured surface. A broom finish may be performed using a fine bristle broom transversely. For bridge approach slabs the carpet drag, burlap drag, or broom finish may be applied either longitudinally or transversely.

Coat the concrete surface immediately after the carpet or burlap drag, or broom finish with a single application of evaporation retardant at a rate recommended by the manufacturer. Do not allow more than 10 minutes to elapse between the texturing at any location and application of evaporation retardant. The evaporation retardant may be applied using the same work bridge used for surface texturing. Do not work the concrete surface once the evaporation retardant has been applied.

Apply interim and final curing in accordance with Section 307.4.J, “Curing Concrete.”

The Contractor is responsible for the ride quality of the finished bridge slab. The Engineer will use a 10 foot straightedge (1/8 inch in 10 feet) to verify ride quality and to determine locations where corrections are needed. If the Engineer determines that the ride quality is unacceptable, submit a plan for approval to produce a ride of acceptable quality. Make all corrections for ride before saw-cutting grooves.

Unless noted otherwise, saw-cut grooves in the hardened concrete of bridge slabs, bridge approach slabs, and direct-traffic culverts to produce the final texturing after completion of the required curing period. Cut grooves perpendicular to the structure centerline. Cut grooves continuously across the slab to within 18 inches of the barrier rail, curb, or median divider. At skewed metal expansion joints in bridge slabs, adjust groove cutting by using narrow-width cutting heads so that all grooves end within 6 inches of the joint, measured perpendicular to the centerline of the metal joint. Leave no ungrooved surface wider than 6 inches adjacent to either side of the joint. Confirm that the minimum distance to the first groove, measured perpendicular to the edge of the concrete joint or from the junction between the concrete and the metal leg of the joint, is 1 inch Cut grooves continuously across construction joints or other joints in the concrete that are less than 1/2 inch wide. Apply the same procedure described above where barrier rails, curbs, or median dividers are not parallel to the structure centerline to maintain the 18 inches maximum dimension from the end of the grooves to the gutter line. Cut grooves continuously across formed concrete joints.

When saw-cut grooves are not required in the plans, provide either a carpet drag or broom finish for micro-texture. In this case insure that an adequate and consistent micro-texture is achieved by applying sufficient weight to the carpet and keeping the carpet or broom from getting plugged with grout. For surfaces that do not have adequate texture, the Engineer may require corrective action including diamond grinding or shot blasting.

When the plans call for a concrete overlay to be placed on the slab (new construction) or on prestressed concrete box beams or other precast elements, give a carpet drag, burlap drag, or broom finish to all concrete surfaces to be overlaid. Saw-grooving is not required in this case. Provide an average texture depth for the finish of approximately 0.035 inch with no individual test falling below 0.020 inch, unless otherwise shown on the plans, when tested in accordance with TxDOT standard laboratory test procedure Tex-436 A. If the texture depth falls below what is intended, revise finishing procedures to produce the desired texture.

When the plans require an asphalt seal, with or without overlay, on the slab (new construction), on prestressed concrete box beams, or on other precast elements, give all concrete surfaces to be covered a lightly textured broom or carpet drag finish. Provide an average texture depth of approximately 0.025 inch when tested in accordance with TxDOT standard laboratory test procedure Tex-436-A.

J. Curing Concrete. Obtain approval of the proposed curing methods, equipment, and materials before placing concrete. The Engineer may require the same curing methods for like portions of a single structure. Inadequate curing or facilities may delay all concrete placement on the job until remedial action is taken.

A curing day is a calendar day when the temperature, taken in the shade away from artificial heat, is above 50°F for at least 19 hours or, on colder days if the temperature of all surfaces of the concrete is maintained above 40°F, for the entire 24 hours. The required curing period begins when all concrete has attained its initial set. TxDOT standard laboratory test procedure Tex-440-A may be used to determine when the concrete has attained its initial set.

Cure all concrete for 4 consecutive days except as noted in Table 1.

Table 1
Exceptions to 4-Day Curing

Description	Type of Cement	Required Curing Days
Upper surfaces of bridge slabs, top slab of direct-traffic culverts, and concrete overlays	I or III	8
	II or I/II	10
	All types with supplementary cementing materials	10
Concrete piling buildups	All	6

For upper surfaces of bridge slabs, bridge approach slabs, median and sidewalk slabs, and culvert top slabs constructed using Class S concrete, apply interim curing using a Type 1-D curing compound before the water sheen disappears but no more than 45 minutes after application of the evaporation retardant. Do not allow the concrete surface to dry before applying the interim cure, and do not place the interim cure over standing water. Apply membrane interim curing using a work bridge or other approved apparatus to confirm a uniform application. Water-cure for final curing in accordance with this Section, starting as soon as possible without damaging the surface finish. Maintain the water curing for the duration noted in Table 1. Place polyethylene sheeting, burlap-polyethylene blankets,

laminated mats, or insulating curing mats in direct contact with the slab when the air temperature is expected to drop below 40°F during the first 72 hours of the curing period. Weigh down these curing materials with dry mats to maintain direct contact with the concrete and to provide insulation against cold weather. Supplemental heating or insulation may be required in cold and wet weather if the insulating cotton mats become wet or if the concrete drops below the specified curing temperature. Avoid applying heat directly to concrete surfaces.

For the top surface of any concrete unit upon which concrete is to be placed and bonded at a later interval (stub walls, risers, etc.) and other superstructure concrete (curbs, wingwalls, parapet walls, etc.), use only water curing in accordance with this Section.

Cure all other concrete as specified in the pertinent Items. Use the following methods for curing concrete, subject to the requirements of this Item.

1. **Form Curing.** When forms are left in intimate contact with the concrete, other curing methods are not required except for exposed surfaces and for cold weather protection. If forms are removed before the 4 day required curing period, use another approved curing method.

2. **Water Curing.** Keep all exposed surfaces of the concrete wet continuously for the required curing time. Use water curing that meets the requirements for concrete mixing water in Section 300.2.D, "Water." Do not use seawater or water that stains or leaves an unsightly residue.

   a. **Wet Mats.** Keep the concrete continuously wet by maintaining wet cotton mats in direct contact with the concrete for the required curing time. If needed, place damp burlap blankets made from 9 ounce stock on the damp concrete surface for temporary protection before applying cotton mats. Then place the dry mats and wet them immediately after they are placed. Weight the mats adequately to provide continuous contact with all concrete. Cover surfaces that cannot be cured by direct contact with mats, forming an enclosure well anchored to the forms or ground so that outside air cannot enter the enclosure. Provide sufficient moisture inside the enclosure to keep all surfaces of the concrete wet.

   b. **Water Spray.** Overlap sprays or sprinklers to keep all unformed surfaces continuously wet.

   c. **Ponding.** Cover the surfaces with at least 2 inches of clean granular material, kept wet at all times, or at least 1 inch deep water. Use a dam to retain the water or saturated granular material.

3. **Membrane Curing.** Unless otherwise shown on the plans, choose either Type 1-D or Type 2 membrane-curing compound when membrane curing is permitted. Type 1-D (Resin Base Only) is required for interim curing bridge slabs and top slabs of direct-traffic culverts and all other surfaces that require a higher grade of surface finish. For substructure concrete provide only 1 type of curing compound on any 1 structure.

   Apply membrane curing just after free moisture has disappeared at a rate of approximately 180 square feet per gallon. Do not spray curing compound on projecting reinforcing steel or concrete that will later form a construction joint. Do not apply

membrane curing to dry surfaces. Dampen formed surfaces and surfaces that have been given a first rub so that they are moist at the time of application of the membrane.

When membrane is used for complete curing, leave the film unbroken for the minimum curing period specified. Correct damaged membrane immediately by reapplication of membrane. Polyethylene sheeting, burlap-polyethylene mats, or laminated mats in close contact with the concrete surfaces are equivalent to membrane curing.

K. Removal of Forms and Falsework. Unless otherwise directed, forms for vertical surfaces may be removed after the concrete has aged 12 hours after initial set provided the removal can be done without damage to the concrete. Keep forms for mass placements, defined in Section 307.4.G.14, "Mass Placements," in place for 4 days following concrete placement.

Remove forms for inside curb faces and for bridge rails whenever removal can be done without damage to the curb or railing.

Leave in place weight-supporting forms and falsework spanning more than 1 foot for all bridge components and culvert slabs except as directed otherwise until the concrete has attained a compressive strength of 2,500 psi. Remove forms for other structural components as necessary.

Remove inside forms (walls and top slabs) for box culverts and sewers after concrete has attained a compressive strength of 1,800 psi if an approved overhead support system is used to transfer the weight of the top slab to the walls of the box culvert or sewer before removal of the support provided by the forms.

Forms or parts of forms may be removed only if constructed to permit removal without disturbing forms or falsework required to be left in place for a longer period on other portions of the structure.

Remove all metal appliances used inside forms for alignment to a depth of at least 1/2 inch from the concrete surface. Make the appliances so that metal may be removed without undue chipping or spalling of the concrete, and so that it leaves a smooth opening in the concrete surface when removed. Do not burn off rods, bolts, or ties.

Remove all forms and falsework unless otherwise directed.

L. Defective Work. Repair defective work as soon as possible. Remove and replace at the expense of the Contractor any defect that cannot be repaired to the satisfaction of the Engineer.

M. Ordinary Surface Finish. Apply an ordinary surface finish to all concrete surfaces as follows:

- Chip away all loose or broken material to sound concrete where porous, spalled, or honeycombed areas are visible after form removal.

- Repair spalls by saw-cutting and chipping at least 1/2 inch deep, perpendicular to the surface to eliminate feather edges. Repair shallow cavities using a latex adhesive grout, cement mortar, or epoxy mortar as approved. Repair large areas using concrete as directed or approved.

- Clean and fill holes or spalls caused by the removal of form ties, etc., with latex grout, cement grout, or epoxy grout as approved. Fill only the holes. Do not blend the patch with the surrounding concrete. On surfaces to receive a rub finish in accordance with Item 311, "Concrete Surface Finish," chip out exposed parts of metals chairs to a depth of 1/2 inch and repair the surface.

- Remove all fins, runs, drips, or mortar from surfaces that will be exposed. Smooth all form marks and chamfer edges by grinding or dry-rubbing.

- Confirm that all repairs are dense, well bonded, and properly cured. Finish exposed large repairs to blend with the surrounding concrete where a higher class of finish is not specified.

Unless noted otherwise, apply an ordinary surface finish as the final finish to the following exposed surfaces:

- inside and top of inlets,

- inside and top of manholes,

- inside of sewer appurtenances,

- inside of culvert barrels,

- bottom of bridge slabs between girders or beams, and

- vertical and bottom surfaces of interior concrete beams or girders.

Form marks and chamfer edges do not need to be smoothed for the inside of culvert barrels and the bottom of bridge slabs between girders or beams.

307.5. MEASUREMENT: This Item will be measured by the cubic yard, square yard, foot, square foot, or by each structure.

A. General. Concrete quantities will be based on the dimensions shown on the plans or those established in writing by the Engineer.

In determining quantities, no deductions will be made for chamfers less than 2 inches or for embedded portions of steel or prestressed concrete beams, piling, anchor bolts, reinforcing steel, drains, weep holes, junction boxes, electrical or telephone conduit, ducts and voids for prestressed tendons, or embedded portions of light fixtures.

For slab and girder spans using pan forms, a quantity will be included for the screed setting required to provide proper camber in the roadway surface after form removal.

For slabs on steel or prestressed concrete beams, an estimated quantity for the haunch between the slab and beams will be included. No measurement will be made during construction for variation in the amount of haunch concrete due to variations in camber of the beams.

For cast-in-place slabs on slab beams, double T beams, or box beams, the combination of span length, theoretical camber in beams, computed deflections, and plan vertical curve will be taken into account in determining the quantity for the slab.

Additional concrete that may be required by an adjustment of the profile grade line during construction, to insure proper slab thickness, will not be measured for payment.

Variation in concrete headwall quantity incurred when an alternate bid for pipe is permitted will not be cause for payment adjustment.

Mass placements may be either a plans quantity item or measured in place as indicated.

Quantities revised by a change in design, measured as specified, will be increased or decreased and included for payment.

B. Plans Quantity. Structure elements designated in Table 2 and measured by the cubic yard are plans quantity measurement items. The quantity to be paid for plans quantity items is the quantity shown in the proposal unless modified by TxDOT's Article 9.2, "Plans Quantity Measurement." Additional measurements or calculations will be made if adjustments of quantities are required.

No adjustment will be made for footings or other in-ground elements where the Contractor has been allowed to place concrete in an excavation without forms.

Table 2
Plans Quantity Payment
(Cubic Yard Measurement Only)

Culverts and culvert wing walls	Abutments
Headwalls for pipe	Slab and girder spans (pan form)
Retaining walls	Footings
Inlets and manholes	Pile bent caps
Shear key concrete for box and slab beams	Concrete wearing surface on pre-cast box beams, slab beams or double-T beams
Bridge approach slabs	Cast-in-place concrete slab spans

Note: Other structure elements, including pier and bent concrete, may be paid for as "plans quantity" when shown on the plans.

C. Measured in Place. Items not paid for as "plans quantity" will be measured in place.

307.6. PAYMENT: The work performed and materials furnished in accordance with this Item and measured as provided under "Measurement" will be paid for at the unit price bid for the various structure elements specified of the various classes of concrete. Mass placements, as defined in Section 307.4.G.14, "Mass Placements," will be paid for separately for the various classes of concrete. This price is full compensation for furnishing, hauling, and mixing concrete materials; furnishing, bending, fabricating, splicing, welding and placing the required reinforcement; clips, blocks, metal spacers, ties, wire, or other materials used for fastening reinforcement in place; placing, finishing, curing, and grooving concrete; applying ordinary surface finish; furnishing and placing drains, metal flashing strips, and expansion-joint material; excavation, subgrade preparation, and disposal of excavated material for bridge approach slabs; and forms and falsework, equipment, labor, tools, and incidentals.

Diaphragm concrete will not be paid for directly but is subsidiary to the slab unless otherwise shown on the plans.

Design and installation of foundations for falsework is at the Contractor's expense.

The following procedure will be used to evaluate concrete where 1 or more project acceptance test specimens fail to meet the required design strength specified in Item 300, "Concrete," or in the plans:

- The concrete for a given placement will be considered structurally adequate and accepted at full price if the average of all test results for specimens made at the time of placement meets the required design strength provided that no single test result is less than 85% of the required design strength.

- The Engineer will perform a structural review of the concrete to determine its adequacy to remain in service if the average of all test results for specimens made at the time of placement is less than the required design strength or if any test results are less than 85% of the required design strength. If cores are required to determine the strength of the in-situ concrete, take cores at locations designated by the Engineer in accordance with TxDOT standard laboratory test procedure Tex-424-A. The coring and testing of the cores will be at the Contractor's expense. The Engineer will test the cores.

- If all of the tested cores meet the required design strength, the concrete will be paid for at the full price.

- If any of the tested cores do not meet the required design strength but the average strength attained is determined to be structurally adequate, the Engineer will determine the limits of the pay adjustment. The average strength of the cores tested will be used in the pay adjustment formula.

- Remove concrete that is not structurally adequate.

- Concrete that has been determined to be structurally adequate may be accepted at an adjusted price based on the following formula:

  $A = B_p[-5.37(S_a/S_s)^2 + 11.69(S_a/S_s) - 5.32]$

  Where:

  A = Amount to be paid

  S_a = Actual strength from cylinders or cores

  S_s = Specified design strength

  B_p = Unit bid price

- The decision to reject structurally inadequate concrete or to apply the pay adjustment will be made no later than 56 days after placement.

307.7. BID ITEM:

Item 307.1 - Concrete Structure - per cubic yard

Item 307.2 - Concrete Structure - per square yard

Item 307.3 - Concrete Structure - per foot

Item 307.4 - Concrete Structure - per square foot

Item 307.5 - Concrete Structure - per each structure

ITEM

401 REINFORCED CONCRETE PIPE

401.1. DESCRIPTION: *Furnish and install reinforced concrete pipe, materials for precast concrete pipe culverts, or precast concrete storm drain mains, laterals, stubs, and inlet leads.*

401.2. MATERIALS:

A. Fabrication. Provide precast reinforced concrete pipe that conforms to the design shown on the plans and to the following:

- ASTM C 76 or ASTM C 655 unless otherwise shown on the plans for circular pipe, or
- ASTM C 506 for arch pipe, or
- ASTM C 507 for horizontal elliptical pipe.

Provide precast concrete pipe that is machine-made or cast by a process that will provide for uniform placement of the concrete in the form and compaction by mechanical devices that will assure a dense concrete.

Mix concrete in a central batch plant or other approved batching facility where the quality and uniformity of the concrete is assured. Do not use transit-mixed concrete for precast concrete pipe. When sulfate-resistant concrete is required, do not use Class C fly ash.

Do not place more than 2 holes for lifting and placing in the top section of precast pipe. Cast, cut, or drill the lifting holes in the wall of the pipe. The maximum hole diameter is 3 in. at the inside surface of the pipe wall and 4 in. at the outside surface. Do not cut more than 1 longitudinal wire or 2 circumferential wires per layer of reinforcing steel when locating lift holes.

B. Design.

1. General. The class and D-load equivalents are shown in Table 1. Furnish arch pipe in accordance with ASTM C 506 and the dimensions shown in Table 2. Furnish horizontal elliptical pipe in accordance with ASTM C 507 and the dimensions shown in Table 3. For arch pipe and horizontal elliptical pipe the minimum height of cover required is 1 ft.

Table 1
Circular Pipe
ASTM C 76 & ASTM C 655

Class	D-Load (lb./ft./ft.)
I	800
II	1,000
III	1,350
IV	2,000
V	3,000

Table 2
Arch Pipe

Design Size	Equivalent Diameter, (in.)	Rise, (in.)	Span (in.)
1	18	13-1/2	22
2	21	15-1/2	26
3	24	18	28-1/2
4	60	22-1/2	36-1/4
5	36	26-5/8	43-3/4
6	42	31-5/16	51-1/8
7	48	36	58-1/2
8	54	40	65
9	60	45	73
10	72	54	88

Table 3
Horizontal Elliptical Pipe

Design Size	Equivalent Diameter, (in.)	Rise, (in.)	Span (in.)
1	18	14	23
2	24	19	30
3	27	22	34
4	30	24	38
5	33	27	42
6	36	29	45
7	39	32	49
8	42	34	53
9	48	38	60
10	54	43	68

2. **Jacking, Boring, or Tunneling.** Design pipe for jacking, boring, or tunneling considering the specific installation conditions such as the soil conditions, installation methods, anticipated deflection angles, and jacking stresses. When requested, provide design notes and drawings signed and sealed by a Texas licensed professional engineer.

C. **Physical Test Requirements.** Acceptance of the pipe will be determined by the results of the following tests:

- material tests required in ASTM C 76, C 655, C 506, or C 507,
- absorption tests in accordance with ASTM C 497,
- three-edge bearing tests in accordance with ASTM C 497 (Perform 3-edge bearing tests on 1 pipe for each 300 pipes or fraction thereof for each design or shape, size, class, or D-load produced within 30 calendar days. Test for the load to produce a 0.01-in. crack or 15% in excess of the required D-load, whichever is less. Test the pipe to ultimate load if so directed. Three-edge bearing test to ultimate load is not required for any class of pipe 60 in. or less in diameter listed in Tables 1-5 of ASTM C 76 provided all other requirements of ASTM C 76 are met.. Tested pipe that satisfies the requirements of Section 401.2.F., "Causes for Rejection," may be used for construction. As an alternate to

the 3-edge bearing test, concrete pipe 54 in. in diameter and larger may be accepted on the basis of compressive strength of cores cut from the wall of the pipe. The manufacturer must determine the compressive strength of the samples. Obtain, cure, prepare, and test the cores in accordance with ASTM C 497 (the manufacturer must plug and seal core holes in the pipe wall after testing), and

- inspection of the finished pipe to determine its conformance with the required design and its freedom from defects.

D. Marking. Clearly mark the following information on each section of pipe:

- class or D-load of pipe,
- ASTM designation,
- date of manufacture,
- name or trademark of the manufacturer, and
- pipe to be used for jacking and boring.

For pipe with elliptical reinforcement, clearly mark 1 end of each section during the process of manufacture or immediately thereafter. Mark the pipe on the inside and the outside of opposite walls to show the location of the top or bottom of the pipe as it should be installed unless the external shape of the pipe is such that the correct position of the top and bottom is obvious. Mark the pipe section by indenting or painting with waterproof paint.

E. Inspection. Provide facilities and access to allow for inspection regarding the quality of materials, the process of manufacture, and the finished pipe at the pipe manufacturing plant. In addition, provide access for inspection of the finished pipe at the project site before and during installation.

F. Causes for Rejection. Individual sections of pipe may be rejected for any of the following:

- fractures or cracks passing through the shell (wall), with the exception of a single end crack that does not exceed the depth of the joint;
- defects that indicate proportioning, mixing, and molding, not in compliance with the appropriate Section of ASTM C76, C655, C506, or C507;
- Surface defects indicating honeycombed or open texture that would adversely affect the function of the pipe;
- damaged ends where such damage would prevent making a satisfactory joint;
- any continuous crack having a surface width of 0.01 in. or more and extending for a length of 12 in. or more.

G. Repairs. Make repairs if necessary because of occasional imperfections in manufacture or accidental damage during handling. The Engineer may accept pipe with repairs that are sound, properly finished, and cured in conformance with pertinent specifications.

H. Rejections. Allow access for the marking of rejected pipe. Rejected pipe will be plainly marked by the Engineer by painting colored spots over the City monogram on the inside wall of the pipe and on the top outside wall of the pipe. The painted spots will be no larger than 4 in. in diameter. The rejected pipe will not be defaced in any other manner. Remove the rejected pipe from the project and replace with pipe meeting the requirements of this Item.

I. Jointing Materials. Use any of the materials described herein for the making of joints, unless otherwise shown on the plans. Furnish a manufacturer's certificate of compliance for all jointing materials except mortar.

1. **Mortar.** Provide mortar for joints that meets the requirements of Section 401.4.C, "Jointing."

2. **Cold-Applied, Plastic Asphalt Sewer Joint Compound.** Provide a material that consists of natural or processed asphalt base, suitable volatile solvents, and inert filler. The consistency is to be such that the ends of the pipe can be coated with a layer of the compound up to ½ in. thick by means of a trowel. Provide a joint compound that cures to a firm, stiff plastic condition after application. Provide a material of a uniform mixture. If any small separation occurs in the container, stir to a uniform mix before using.

   Provide a material that meets the requirements of Table 4 when tested in accordance with TxDOT Standard Test Method Tex-526-C.

Table 4
Cold-Applied, Plastic Asphalt Sewer Joint Compound
Material Requirements

Composition	Analysis
Asphalt base, 100%–% volatiles–% ash, % by weight	28 - 45
Volatiles, 212°F evaporation, 24 hr., % by weight	10 - 26
Mineral matter, determined as ash, % by weight	30 - 75
Consistency, cone penetration, 150 q, 5 sec., 77°F	150 - 275

3. **Rubber Gaskets.** Provide gaskets that conform to ASTM C 361 or C 443. Meet the requirements of ASTM C 443 for design of the joints and permissible variations in dimensions.

4. **Pre-Formed Flexible Joint Sealants.** Pre-formed flexible joint sealants may be used for sealing joints of tongue-and-groove concrete pipe. Provide flexible joint sealants that meet the requirements of ASTM C 990. Use flexible joint sealants that do not depend on oxidizing, evaporating, or chemical action for its adhesive or cohesive strength. Supply in extruded rope form of suitable cross section. Provide a size of the pre-formed flexible joint sealant in accordance with the manufacturer's recommendations and large enough to properly seal the joint. Flexible joint sealants must be protected by a suitable wrapper, and the jointing material must maintain integrity when the wrapper is removed.

401.3. EQUIPMENT: Provide the machinery, tools and equipment necessary for proper prosecution of the work. All machinery, tools and equipment used shall be maintained in a satisfactory and workmanlike manner.

401.4. CONSTRUCTION:

A. Excavation, Shaping, Bedding, and Backfill. Excavate, shape, bed, and backfill in accordance with Item 400, "Excavation, Trenching and Backfilling," except where jacking,

boring, or tunneling methods are permitted. Jack, bore, or tunnel the pipe in accordance with Item 406, "Jacking, Boring, or Tunneling." If joints consist of materials other than mortar, immediate backfilling is permitted. Take special precautions in placing and compacting the backfill to avoid any movement of the pipe or damage to the joints. Unless otherwise shown on the plans or permitted in writing, do not use heavy earth-moving equipment to haul over the structure until a minimum of 4 ft. of permanent or temporary compacted fill has been placed over the structure. Remove and replace pipe damaged by the Contractor at no expense to the City.

B. Laying Pipe. Unless otherwise authorized, start the laying of pipe on the bedding at the outlet end with the spigot or tongue end pointing downstream, and proceed toward the inlet end with the abutting sections properly matched, true to the established lines and grades. Fit, match, and lay the pipe to form a smooth, uniform conduit. Where bell-and-spigot pipe is used, cut cross trenches in the foundation to allow the barrel of the pipe to rest firmly upon the bedding. Do not cut cross trenches more than 2 in. larger than the bell ends of the pipe. Lower sections of pipe into the trench without damaging the pipe or disturbing the bedding and the sides of the trench. Carefully clean the ends of the pipe before the pipe is placed. Prevent the earth or bedding material from entering the pipe as it is laid. When elliptical pipe with circular reinforcing or circular pipe with elliptical reinforcing is used, lay the pipe in the trench so that the markings for the top or bottom are not more than 5° from the vertical plane through the longitudinal axis of the pipe. Remove and re-lay, without extra compensation, pipe that is not in alignment or that shows excessive settlement after laying.

Lay multiple lines of reinforced concrete pipe with the centerlines of the individual barrels parallel. Unless otherwise shown on the plans, use the clear distances between outer surfaces of adjacent pipes shown in Table 5. For arch pipe or horizontal elliptical pipe use the equivalent diameter from Table 2 or Table 3 to determine the clear distance requirement in Table 5.

Table 5
Minimum Clear Distance between Pipes

Equivalent Diameter	Min. Clear Distance
18 in.	9 in.
24 in.	11 in.
30 in.	1 ft. 1 in.
36 in.	1 ft. 3 in.
42 in.	1 ft. 5 in.
48 in.	1 ft. 7 in.
54 in.	1 ft. 11 in.
60 to 84 in.	2 ft.

C. Jointing. Make available an appropriate rolling device similar to an automobile mechanic's "creeper" for conveyance through small-size pipe structures.

1. **Joints Sealed with Hydraulic Cement Mortar.** Use mortar consisting of 1 part cement, 2 parts sand, and enough water to make a plastic mix. Clean and wet the pipe ends before making the joint. Plaster the lower half of the bell or groove and the upper half of the tongue or spigot with mortar. After the pipes are tightly jointed, pack mortar into the joint from both inside and outside the pipe. Finish the inside smooth and flush with adjacent joints of pipe. For tongue-and-groove joints, form a bead of semicircular cross section over the joint outside the pipe, extending at least 1 in. on each side of the joint. For bell-and-spigot joints, form the mortar to a 45° fillet between the outer edge of the bell and

the spigot. Cure mortar joints by keeping the joints wet for at least 48 hr. or until the backfill has been completed, whichever comes first. When mortar joints are used, do not place fill or backfill until the jointing material has cured for at least 6 hr. Do not conduct jointing when the atmospheric temperature is at or below 40°F. Protect mortared joints against freezing by backfilling or other approved methods for at least 24 hr.

Driveway culverts do not require mortar banding on the outside of the pipe.

With approval, pipes that are large enough for a person to enter may be furnished with the groove between ½ in. and ¾ in. longer than the tongue. Such pipe may be laid and backfilled without mortar joints. After the backfilling has been completed, clean the space on the interior of the pipe between the end of the tongue and the groove of all foreign material, thoroughly wet and fill with mortar around the entire circumference of the pipe, and finish flush.

2. **Joints Using Cold-Applied, Plastic Asphalt Sewer Joint Compound.** Ensure that both ends of the pipes are clean and dry. Trowel or otherwise place a ½-in.-thick layer of the compound in the groove end of the pipe covering at least ⅔ of the joint face around the entire circumference. Next, shove home the tongue end of the next pipe with enough pressure to make a tight joint. After the joint is made, remove any excess mastic projecting into the pipe. Backfill after the joint has been inspected and approved.

3. **Joints Using Rubber Gaskets.** Make the joint assembly according to the recommendations of the gasket manufacturer. When using rubber gaskets, make joints watertight. Backfill after the joint has been inspected and approved.

4. **Joints Using Pre-Formed Flexible Joint Sealants.** Install pre-formed flexible joint sealants in accordance with the manufacturer's recommendations. Place the joint sealer so that no dirt or other deleterious materials come in contact with the joint sealing material. Pull or push home the pipe with enough force to properly seal the joint. Remove any joint material pushed out into the interior of the pipe that would tend to obstruct the flow. When the atmospheric temperature is below 60°F, store pre-formed flexible joint sealants in an area warmed to above 70°F or artificially warm to this temperature in an approved manner. Apply flexible joint sealants to pipe joints immediately before placing pipe in trench, and then connect pipe to previously laid pipe. Backfill after the joint has been inspected and approved.

D. Connections and Stub Ends. Make connections of concrete pipe to existing pipes, pipe storm drains, or storm drain appurtenances as shown on the plans.

Mortar or concrete the bottom of existing structures if necessary to eliminate any drainage pockets created by the connections. Repair any damage to the existing structure resulting from making the connections.

Unless otherwise shown in the plans, make connections between concrete pipe and corrugated metal pipe with a suitable concrete collar having a minimum thickness of 4 in.

Finish stub ends for connections to future work not shown on the plans by installing watertight plugs into the free end of the pipe.

Fill lift holes with concrete, mortar, or precast concrete plugs after the pipe is in place.

401.5. MEASUREMENT: This Item will be measured by the foot. Measurement will be made between the ends of the pipe barrel along the flow line, not including safety end treatments. Safety end treatments, if used, will be measured in accordance with TxDOT Standard Specification Item 467, "Safety End Treatment." Pipe that will be jacked, bored, or tunneled will be measured in accordance with Item 406, "Jacking, Boring, or Tunneling." Measurement of spurs, branches, or new connecting pipe will be made from the intersection of the flow line with the outside surface of the pipe into which it connects. Where inlets, headwalls, catch basins, manholes, junction chambers, or other structures are included in lines of pipe, the length of pipe tying into the structure wall will be included for measurement, but no other portion of the structure length or width will be included. For multiple pipes, the measured length will be the sum of the lengths of the barrels.

This is a plans quantity measurement Item. The quantity to be paid is the quantity shown in the proposal unless modified by the Engineer. Additional measurements or calculations will be made if adjustments of quantities are required.

401.6. PAYMENT: The work performed and materials furnished in accordance with this Item and measured as provided under "Measurement" will be paid for at the unit price bid for "Reinforced Concrete Pipe," "Reinforced Concrete Pipe (Arch)," or "Reinforced Concrete Pipe (Elliptical)" of the size and D-load specified or of the size and class specified. This price is full compensation for constructing, furnishing, transporting, placing, and joining pipes; shaping the bed; cutting pipes on skew or slope; connecting to new or existing structures; breaking back, removing, and disposing of portions of the existing structure; replacing portions of the existing structure; cutting pipe ends on skew or slope; and equipment, labor, tools, and incidentals.

Protection methods for excavations greater than 5 ft. deep will be measured and paid for as required under Item 550, "Trench Excavation safety Protection," or Item 551, "Special Shoring." Excavation, shaping, bedding, and backfill will be paid for in accordance with Item 400, "Excavation, Trenching and Backfilling." When jacking, boring, or tunneling is used at the Contractor's option, payment will be made under this Item. When jacking, boring or tunneling is required, payment will be made under Item 406, "Jacking, Boring or Tunneling Pipe or Box."

401.7. BID ITEM:

Item 401.1 - Reinforced Concrete Pipe - per linear foot (Class _) (_ inches dia.)

Item 401.2 - Reinforced Concrete Pipe (Arch) - per linear foot (Design Size _)

Item 401.3 - Reinforced Concrete Pipe (Elliptical) - per linear foot (Design Size _)

Item 401.4 - Safety End Treatment (Type __) - per barrel of each structure end

ITEM

403 STORM SEWER JUNCTION BOXES AND INLETS

403.1. DESCRIPTION: *Construct junction boxes and inlets, complete in place or to the stage detailed, including excavation and backfilling; furnishing and installing frames, grates, rings and covers. Storm sewer (drainage) junction boxes are classified as junction boxes.*

403.2. MATERIALS: Furnish materials in accordance with the following:

- Item 300, "Concrete"
- Item 301, "Reinforcing Steel"
- Item 307, "Concrete Structures"
- Item 407, "Frames, Grates, Rings, and Covers."

Precast junction boxes, inlets, risers, and appurtenances are acceptable unless otherwise shown. Alternate designs for precast items must be acceptable to the Engineer and not deviate from the functional dimensions given. Alternate designs are to be designed and sealed by a licensed professional engineer.

A. Concrete. Furnish Class A concrete for cast-in-place junction boxes and inlets unless otherwise shown on the plans. Furnish Class A concrete or concrete meeting ASTM C 478 for precast junction boxes and inlets. Air-entrained concrete will not be required in precast concrete members.

B. Mortar. Furnish mortar composed of 1 part hydraulic cement and 2 parts clean sand. Hydrated lime or lime putty may be added to the mix to a maximum of 10% by weight of the total dry mix.

C. Bricks. Furnish first-quality, sound, properly shaped bricks. Provide clay or shale bricks that are homogeneous and thoroughly and uniformly hard-burned and that meet ASTM C 32, Grade MS or MM. Provide concrete bricks meeting ASTM C 55, Type I (Grade S-I). The maximum allowable water absorption of completely dry bricks is 16% by weight when submerged in water for 24-hours.

D. Concrete Blocks. Provide concrete blocks that meet ASTM C 139.

E. Cast Iron or Aluminum. Provide supports and steps conforming to the shape and dimensions shown on the plans that meet the requirements of ASTM A 48, Class 35B, for gray iron castings or ASTM A 536, Grade 65-45-12, for ductile iron castings. Steps may also be aluminum meeting ASTM B 221, Alloy 6005-T5. Provide steps in accordance with ASTM C 478, Section 16, "Steps and Ladders."

F. Timber. Provide sound timber for temporary covers when used with Stage I construction (see Section 403.3, "Construction") that is a minimum of 3 inches nominal thickness and reasonably free of knots and warps.

G. Other Materials. Commercial-type hardware of other materials may be used with prior approval.

403.3. CONSTRUCTION:

A. General. All types of junction boxes and inlets may be built either in 1 stage or in 2 stages, described as Stage I and Stage II. Build junction boxes and inlets designed to match the final roadway surface in stages. Construct Stage II after the pavement structure is substantially complete unless otherwise approved by the Engineer.

Construct the Stage I portion of junction boxes and inlets as shown on the plans or as specified in this Item. Furnish and install a temporary cover as approved by the Engineer.

For Stage I construction of cast iron or steel inlet units, furnish and install the sewer pipe and a temporary plug for the exposed end of the sewer pipe from the storm sewer to a point below the top of curb indicated on the plans.

For Stage II, construct the remaining wall height and top of junction boxes or inlet and furnish and install any frames, grates, rings and covers, junction boxes steps, curb beams, or collecting basins required.

Construct precast junction boxes and inlets in accordance with Item 307, "Concrete Structures," or ASTM C 478. Construct cast-in-place junction boxes and inlets in accordance with Item 307. Forms will be required for all concrete walls. Multi-project fabrication plants (as defined in TxDOT Item 424, "Precast Concrete Structures (Fabrication)") that produce junction boxes and inlets will be approved by the TxDOT Construction Division in accordance with TxDOT DMS 7340, "Qualification Procedure for Multi-Project Fabrication Plants of Precast Concrete Junction boxes and Inlets." The TxDOT Construction Division maintains a list of approved multi-project plants. Outside wall forms for cast-in-place concrete may be omitted with the approval of the Engineer if the surrounding material can be trimmed to a smooth vertical face. The outside form for concrete bases supporting brick walls may be omitted. Cast steps into the concrete walls when the concrete is placed, or drill and grout steps in place after concrete placement. Mortar steps into joints for brick walls. Use a full bed of mortar for brick work so the brick will thoroughly bond to the mortar. Construct full mortar joints no more than ½-inch wide for brick walls. Furnish a header course or bond course (laid perpendicular to the preceding courses) every fifth course of brick.

B. Junction boxes and Inlets for Precast Concrete Pipe Sewers. Construct junction boxes and inlets for precast concrete pipe sewers as soon as is practicable after sewer lines into or through the junction box or inlet locations are completed. Neatly cut all sewers at the inside face of the walls of the junction box or inlet and point up with mortar.

C. Junction boxes and Inlets for Monolithic Pipe Sewers. Construct bases for junction boxes and inlets on monolithic pipe sewers either monolithically with the sewer or after the sewer is constructed.

D. Junction boxes for Box Sewers. Cast bases for junction boxes for box sewers as an integral part of the sewer. Construct junction boxes before backfilling, or cover the junction box opening temporarily and backfill the sewer as a whole.

E. Inverts. Shape and route floor inverts passing out or through the junction box or inlet as shown on the plans. Shape by adding and shaping mortar or concrete after the base is cast or by placing the required additional material with the base.

F. **Finishing Complete Junction boxes and Inlets.** Complete junction boxes and inlets in accordance with the plans. Backfill to original ground elevation in accordance with Item 106, "Box Culvert Excavation and Backfilling."

G. **Finishing Stage I Construction.** Complete Stage I construction by constructing the walls to the elevations shown on the plans and backfilling to required elevations in accordance with Item 106, "Box Culvert Excavation and Backfilling."

H. **Stage II Construction.** Construct subgrade and base course or concrete pavement construction over Stage I junction box or inlet construction, unless otherwise approved by the Engineer. Excavate to expose the top of Stage I construction and complete the junction box or inlet in accordance with the plans and these Specifications, including backfill and cleaning of all debris from the bottom of the junction box or inlet.

I. **Inlet Units.** Install cast iron or steel inlet units in conjunction with the construction of concrete curb and gutter. Set the inlet units securely in position before placing concrete for curb and gutter. Form openings for the inlets and recesses in curb and gutter as shown on the plans. Place and thoroughly consolidate concrete for curb and gutter adjacent to inlets and around the inlet castings and formed openings and recesses without displacing the inlet units.

403.4. MEASUREMENT: All junction boxes and inlets satisfactorily completed in accordance with the plans and specifications will be measured by each junction boxes or inlet, complete, or by each junction box or inlet completed to the stage of construction required by the plans. Extension to inlets will be measured by each extension separately from the inlet.

403.5. PAYMENT: The work performed and materials furnished in accordance with this Item and measured as provided under "Measurement" will be paid for as follows:

A. **Complete Junction boxes.** Payment for complete junction boxes will be made at the unit price bid for "Junction Box (Complete)" of the type specified.

B. **Complete Inlets.** Payment for inlets will be made at the unit price bid for "Inlet (Complete)," of the type specified.

C. **Inlet Extensions.** Payment for inlet extensions will be made at the unit price bid for "Inlet Extension" of the type specified.

These price are full compensation for concrete, reinforcing steel, brick, mortar, aluminum and cast iron castings, frames, grates, rings and covers, excavation, and backfill and for all other materials, tools, equipment, labor, and incidentals.

403.6. BID ITEMS:

Item 403.1 - Junction Box (Complete) 4'x4'x4'

Item 403.2 - Junction Box (Complete) 5'x5'x5'

Item 403.3 - Junction Box (Complete) 6'x6'x6'

Item 403.4 - Junction Box (Complete) 7'x7'x7'

Item 403.5 - Junction Box (Complete) 8'x8'x8'

Item 403.6 - Special Junction Boxes (Complete)

Item 403.7 - Inlet (Complete) 5’

Item 403.8 - Inlet (Complete) 10’

Item 403.9 - Inlet (Complete) 15’

Item 403.10 - Inlet (Complete) 20’

Item 403.11 - Inlet (Complete) 25’

Item 403.12 - Inlet (Complete) 30’

Item 403.13 - Special Inlets (Complete)

Item 403.14 - Inlet Extensions

ITEM

413 FLOWABLE FILL

413.1. DESCRIPTION: *Furnish, mix, test and install flowable fill. Flowable fill is a concrete material suitable as a backfill for utility trenches, abandoned pipes, manholes and valves. It is a heavy material and will exert a high fluid pressure against any forms, embankment, or wall used to contain the backfill.*

413.2. MATERIALS:

A. Cement. Furnish hydraulic cement that meets the requirements of TxDOT's DMS-4600, "Hydraulic Cement," TxDOT's Hydraulic Cement Quality Monitoring Program (HCQMP), and ASTM C-150 Type I Portland Cement. Sources not on the HCQMP or other sources to be used in combination with an approved source will require approval before use.

B. Fly Ash. Furnish fly ash conforming to TxDOT DMS-4610, "Fly Ash."

C. Chemical Admixtures. Furnish chemical admixtures conforming to TxDOT DMS-4640, "Chemical Admixtures for Concrete."

D. Fine Aggregate. Provide fine aggregate that will stay in suspension in the mortar to the extent required for proper flow and that meets the gradation requirements of Table 1. Test fine aggregate gradation in accordance with TxDOT standard laboratory test procedure Tex-401-A. Plasticity Index (PI) must not exceed 6 when tested in accordance with TxDOT standard laboratory test procedure Tex-106-A.

Table 1
Aggregate Gradation Chart

Sieve Size	Percent Passing
¾ in.	100
No. 200	0–30

E. Mixing Water. Use mixing water conforming to the requirements of Item 300, "Concrete."

413.3. CONSTRUCTION: Submit a construction method and plan, including mix design and shrinkage characteristics of the mix, for approval. Provide a means of filling the entire void area, and be able to demonstrate that this has been accomplished. Prevent the movement of any inserted structure from its designated location. If voids are found in the fill or if any of the requirements are not met as shown on the plans, remove and replace or correct the problem without additional cost to the City.

Unless otherwise shown on the plans, furnish a mix meeting the requirements of Sections 413.3.A, "Strength," and 413.3.B, "Consistency."

A. Strength. The compressive strength range, when tested in accordance with TxDOT standard laboratory test procedure Tex-418-A, must be between the following strength values unless otherwise directed by the Engineer or shown on the plans:

1. Low Strength. Between 80 psi and 150 psi at 28 days,

2. **High Strength.** Greater than 500 psi at 28 days. For emergency repairs, strength shall be greater than 50 psi at 2 hours.

Two specimens are required for a strength test, and the compressive strength is defined as the average of the breaking strength of the 2 cylinders.

B. **Consistency.** Design the mix to be placed without consolidation and to fill all intended voids. Fill an open-ended, 3 inch diameter by 6 inch high cylinder to the top to test the consistency. Immediately pull the cylinder straight up. The correct consistency of the mix must produce a minimum 8 inch diameter circular spread with no segregation.

When necessary, use specialty type admixtures to enhance the flowability, reduce shrinkage, and reduce segregation by maintaining solids in suspension. All admixtures must be used and proportioned in accordance with the manufacturer's recommendations.

Mix the flowable fill using a central-mixed concrete plant, ready-mix concrete truck, pug mill, or other approved method.

Furnish all labor, equipment, tools, containers, and molds required for sampling, making, transporting, curing, removal, and disposal of test specimens. Furnish test molds meeting the requirements of TxDOT standard laboratory test procedure Tex-447-A. Transport, strip, and cure the test specimens as scheduled at the designated location. Cure test specimens in accordance with TxDOT standard laboratory test procedure Tex-447-A. The Engineer will sample, make, and test all specimens. Dispose of used, broken specimens in an approved location and manner. The frequency of job control testing will be at the direction of the Engineer.

C. **Shrinkage and Bleeding.** Limit shrinkage to 0.5% or less based upon the results from ASTM C 827, "Change in Height at Early Ages of Cylindrical Specimens from Cementitious Mixtures."

413.4. MEASUREMENT: This Item will be measured by the cubic yard of material placed. Measurement will not include additional volume caused by slips, slides, or cave-ins resulting from the Contractor's operations.

413.5. PAYMENT: The work performed and materials furnished in accordance with this Item and measured as provided under "Measurement" will be paid for at the unit price bid for "Flowable Fill (Low Strength)," "Flowable Fill (High Strength)," or "Flowable Fill (High Strength emergency Repair)." This price is full compensation for furnishing, hauling, and placing materials and for equipment, tools, labor, and incidentals.

When shown on the plans or when other specifications indicate the use of flowable fill is incidental to another pay item, no direct payment for the material will be made.

413.6. BID ITEMS:

Item 413.1 - Flowable Fill (Low Strength) - per cubic yard

Item 413.2 - Flowable Fill (High Strength) - per cubic yard

Item 413.3 - Flowable Fill (High Strength Emergency Repair) - per cubic yard

ITEM

507 CHAIN LINK WIRE FENCE

507.1. DESCRIPTION: *This item shall govern for chain link fabric supported on posts and with bracing and accessories as shown in the plans or as specified herein, erected complete in place as shown in the plans or as directed by the inspector.*

507.2. MATERIALS: Before installation of the chain link fence, furnish certification from the fence materials manufacturer stating that all fencing materials comply with the requirements of this Item. Use only new materials.

A. General. Furnish materials in accordance with the following:

1. Concrete. Item 300, "Concrete," Class "B."

2. Galvanizing. Texas Department of Transportation Item 445, "Galvanizing."

B. Fabric. Provide wire fabric with:

1. Nine (9) gauge (0.148 in. diameter) steel wire with a minimum breaking strength of 1,290 lb. meeting ASTM A 392 Class I or ASTM A 491;

2. mesh size of 2 in. ±⅛ in. between parallel wires with at least 7 meshes in a vertical dimension of 23 in. along the diagonals of the openings; and

3. knuckled selvages at the top and bottom edge of the fabric, unless otherwise shown on the plans.

C. Posts. Provide posts of the size and weight shown on the plans. Do not provide rerolled or open-seam posts. Use material meeting ASTM F 1083 for all posts. When specified, furnish thin-wall, high-strength pipe posts manufactured by cold rolling using steel strip conforming to ASTM A 1011, CS (Commercial Steel).

D. Post Caps. Provide malleable iron post caps designed to exclude all moisture. If barbed wire is shown on the plans, furnish barbed wire support arms integral with the post caps. If top rail is shown on the plans, furnish post caps with an opening for the top rail. Post caps must have a 2-in. skirt.

E. Gates. Provide gates fabricated from round sections of pipe of the size and weight shown on the plans. Use material meeting ASTM F 1083 for all gate pipes. For each gate, include:

1. corner and tee fittings of malleable iron or pressed steel with means for attaching diagonal bracing members;

2. hinges of malleable iron allowing a full 180° swing, easily operated by one person;

3. ball-and-socket-type bottom hinges that do not twist or turn from the action of the gate and prevent the closed gate from being lifted off the hinges;

4. a positive stop that prevents any portion of the gate from swinging over an adjacent traffic lane;

5. malleable iron pulley systems for roll type gate (only when required);

6. diagonal braces consisting of ⅜-in.-diameter cable with turnbuckles, 2 to each gate frame, and, for vehicle gates, a vertical pipe brace of the size and weight shown on the plans at the center of each gate leaf;

7. latches of malleable iron or steel for single gates with a single-fork latch and padlock eye that will keep the gate closed;

8. two fork latches mounted on a center plunger rod with a padlock eye for double-leaf gates;

9. holdbacks for each leaf of vehicular gates, with a semi-automatic holdback catch anchored at least 12 in. into a 12 in.-diameter by 24 in.-deep concrete footing; and

10. a malleable iron center rest, designed to receive the plunger rod anchored as shown on the plans for all double-leaf gates.

F. **Top Rail.** When shown on the plans, provide top rail manufactured from 1.660 in. OD standard weight (Schedule 40) steel pipe weighing 2.27 lb. per foot or high-strength pipe weighing 1.82 lb. per foot. Use material meeting ASTM F 1083 for all top rail pipes. Provide pipe in sections at least 18 ft. long joined with outside steel sleeve couplings at least 6 in. long with a minimum wall thickness of 0.70 in. Use couplings designed to allow for expansion of the top rail.

G. **Tension Wire.** Unless shown on the plans, use 7 gauge (0.177-in.) carbon steel wire with a minimum breaking strength of 1,950 lb. for the bottom edge of all fence fabric, and for the top edge of fence fabric when a top rail is not specified.

H. **Truss Bracing.** Provide truss bracing as shown on the plans.

I. **Stretcher Bars.** Provide stretcher bars made of flat steel at least 3/16 in. by ¾ in. and not more than 2 in. shorter than the fabric height. Provide 1 stretcher bar for each gate and end post and 2 stretcher bars for each corner and pull post.

J. **Grounds.** Provide copper-clad steel rods 8 ft. long with a minimum diameter of ⅝ in., or other UL-listed ground rods.

K. **Tie Wire.** Wire for attaching fabric to tension wire and to top rail shall be not less than No. 12 gauge galvanized wire, or fastenings in accordance with the manufacturer's standard design. Sufficient fastening material shall be furnished to provide for attaching the fabric to the tension wire and to the top rail and posts at the spacing shown on the plans.

L. **Braces and Cables.** Braces or cables shall be installed at all corner, tension, terminal and gate posts and shall be extended to adjacent line posts, in accordance with the plans. Braces and trussing material shall be high carbon steel of good commercial quality and shall meet the dimensions and other requirements on the plans. Brace rods shall be ⅜ inch diameter and be equipped with turnbuckles. Cables shall be ⅜ inch diameter and shall be composed of seven wires. Cables shall be installed as shown on the plans, and shall include the use of ⅜ inch drop-forged eye-and-eye, or eye-and-clevis turnbuckles.

M. Steel Pipe. All steel pipe, except for thin-wall, high strength pipe, used for top rails, line posts, corner, tension, terminal or gate posts, braces or gate frames shall conform to the requirements of ASTM A 120. Thin-wall, high strength pipe shall be manufactured by cold rolling using steel strip conforming to ASTM A 569.

N. Galvanizing and Aluminum Coating. Unless specified on the plans, hot-dip galvanize all materials. Fabric and tension wire may be aluminum coated or alloy-coated if approved. When shown on the plans, additionally coat all material except bolts, nuts, and washers with thermally fused polyvinyl chloride (PVC) in accordance with ASTM F 668, Class 2B, meeting the specified color.

1. **Fabric.**

   a. **Galvanizing.** Hot-dip galvanize in accordance with ASTM A 392, Class I.

   b. **Aluminum Coating.** Aluminum-coat in accordance with ASTM A 491.

   c. **Alloy Coating.** Coat with zinc-5% aluminum-mischmetal alloy (Zn-5A1-MM) in accordance with ASTM F 1345, Class I.

2. **Posts.**

   a. **Inside and Outside Galvanizing.** Hot-dip galvanize inside and outside in conformance with ASTM F 1083.

   b. **Alloy Coating.** Coat inside and outside with Zn-5A1-MM in accordance with ASTM F 1043, Class C.

3. **Braces and Gates.**

   a. **Galvanizing.** Hot-dip galvanize braces and gates inside and out in conformance with ASTM F 1083.

   b. **Alloy Coating.** Coat inside and out with (Zn-5A1-MM) in accordance with ASTM F 1043, Class C.

4. **Fittings, Bolts, and Other Miscellaneous Hardware.** Galvanize all fittings, bolts and miscellaneous hardware in conformance with TxDOT Item 445, "Galvanizing."

5. **Tension Wire.** Zinc-coat tension wire with a minimum coating of 0.80 oz./sq. ft. or aluminum-coat with a minimum coating of 0.30 oz./sq. ft.

6. **Barbed Wire.** Zinc-coat barbed wire in accordance with ASTM A 121 (0.80 oz./sq. ft.) or aluminum-coat in accordance with ASTM A 585 (0.30 oz./sq. ft.).

7. **Pull Cable.** Zinc-coat pull cable with a minimum coating of 0.80 oz./sq. ft. of individual-wire surface when tested in conformance with ASTM A 116.

O. Sampling. If there is reason to confirm the Certification provided in 507.2, "Materials," the Contractor shall furnish, upon request of the Engineer, samples of each component part of the fence, including fittings. These samples shall be subjected to the galvanizing, weight and, where applicable, strength tests. A sample may be taken from each shipment and all samples shall be furnished to the City without cost. If a sample or specimen fails to meet the

requirements of this specification, two additional samples or specimens shall be taken from the same shipment and tested, either samples or specimens so tested shall meet the requirements in every respect, or the lot represented by the samples may be rejected.

507.3. EQUIPMENT: Provide the machinery, tools and equipment necessary for proper prosecution of the work. All machinery, tools and equipment used shall be maintained in a satisfactory and workmanlike manner.

507.4. CONSTRUCTION: Erect the chain link fence to the lines and grades established on the plans. Overall height of the fence when erected is the height above the grade shown.

A. Clearing and Grading. Clear all brush, rocks, and debris necessary for the installation of this fencing. Unless otherwise shown on the plans, stake the locations for corner posts and terminal posts. Follow the finished ground elevations for fencing panels between corner and terminal posts. Level off minor irregularities in the path of the fencing.

B. Erection of Posts. Install posts as shown on the plans. Plumb and permanently position posts with anchorages firmly set before fabric is placed. Brace corner and pull posts as shown on the plans.

1. Post Spacing. Space posts as shown in Table 1.

Table 1
Post Spacing and Placement

Post Type	Required Spacing of Placement
Line Posts	at most 10 ft. apart
Tension Posts	at most 330 ft. apart and at each change in direction exceeding 20° vertically
Corner Posts	at each horizontal angle point

Install cables on all terminal posts and extend to adjacent posts. Install cables on each side of corner and pull posts with a ⅜-in. drop-forged eye-and-eye or eye-and-clevis turnbuckle, unless otherwise shown on the plans.

2. Postholes. Drill holes for concrete footings for all posts to provide footings of the dimensions shown on the plans.

Where solid rock is encountered before reaching plan depth, penetrate the solid rock by at least 12 in. (18 in. for end, corner, gate, and pull posts) or to plan depth. Drill holes in the solid rock with a diameter at least 1 in. greater than the outside diameter of the post.

After the posts are set and plumbed, fill the hole in the solid rock with grout consisting of 1 part hydraulic cement and 3 parts clean, well-graded sand. Other grouting materials may be used if approved. Thoroughly work the grout into the hole, leaving no voids. Construct concrete footings from the solid rock to the top of the ground.

3. Gate Posts. Align the tops of all gate frames with the fencing top tension wire or top rail. If curbs are shown on the plans, provide vehicular gates that are greater in overall height than the adjacent fencing by the height necessary to extend to within 2 in. of the pavement between the curbs.

4. **Concrete Footings.** Center posts in their footings. Place concrete and compact by tamping or other approved methods. Machine mix all batches of concrete over ½ cu. yd. Hand mixing concrete is allowed on batches under ½ cu. yd.

   Use forms for footings where the ground cannot be satisfactorily excavated to neat lines. Crown the concrete or grout (for solid rock) to carry water from the post. Keep the forms in place for at least 24 hr. Backfill the footing with moistened material as soon as each form is removed, and thoroughly tamp. Cover concrete with at least 4 in. of loose moist material, free of clods and gravel, immediately after placing concrete. No other curing is required.

   Spread all excess excavated and loose material used for curing neatly and uniformly. Remove excess concrete and other construction debris from the site.

C. Erection of Fabric. After all posts have been permanently positioned and anchorages firmly set, place the fabric with the cables drawn taut with the turnbuckles. Secure one end and apply enough tension to the other end to remove all slack before making attachments. Unless otherwise shown on the plans, cut the fabric and independently attach each span at all corner posts and pull posts.

Follow the finished contour of the site with the bottom edge of fabric located approximately 2 in. above the grade. Grade uneven areas so the maximum distance between the bottom of fabric and ground is 6 in. or less. Fasten fabric at 12 in. intervals to the top and bottom tension wires between posts. When top rail is shown on the plans, fasten the fabric in the same manner. On gate frames, fasten the fabric to the top and bottom of the gate frame at 12 in. intervals. Use steel wire fabric ties of 9 gauge steel or larger.

Fasten fabric to terminal posts by steel stretcher bars and stretcher bar bands fitted with carriage bolts and nuts of the size and spacing shown on the plans. Use stretcher bars to fasten endposts, pull posts, corner posts, and gateposts with stretcher bar bands at intervals of at most 15 in. Attach stretcher bars to terminal posts with 1 in. × ⅛ in. flat steel bands with ⅜-in. carriage bolts at intervals up to 15 in.

D. Electrical Grounds. Provide at least 1 electrical ground for each 1,000 ft. of fence, located near the center of the run. Provide additional grounds directly under the point where power lines pass over the fence. Vertically drive or drill in the grounding rod until the top of the rod is approximately 6 in. below the top of the ground. Connect a No. 6 solid copper conductor to the rod and to the fence by a UL-listed method so that each element of the fence is grounded.

E. Repair of Coatings. Repair damaged zinc coating in accordance with TxDOT Item 445, Section 445.3.D, "Repairs."

507.5. MEASUREMENT: "Chain Link Wire Fence," of the height specified, will be measured by the linear foot of fence at the bottom of the fabric along the center line of the fence from center to center of end posts, exclusive of gates. "Chain Link Wire Fence" shall include all end posts, angle and corner posts, and tension posts, complete in place with all bracing and accessories.

Gates will be measured per each gate of each type, complete in place with gate posts, all bracing and all accessories.

507.6. PAYMENT: "Chain Link Wire Fence" measured as prescribed above, will be paid for at the contract unit price bid per linear foot for "Chain Link Wire Fence" of the height specified, which

price shall be full compensation for furnishing and installing all fencing materials, end posts, angle and corner posts, tension posts, line posts, caps, tension wires, top rail, and connection fittings; digging post holes or setting into retaining wall and structures; furnishing and placing concrete for setting posts; all hauling and hauling charges; and for all manipulation, labor, tools, equipment, and incidentals necessary to complete the work.

Gates measured as prescribed above will be paid for at the contract unit price bid for each "Gate, Pedestrian" or "Gate, Vehicular" of each size called for, which price shall be full compensation for furnishing all materials; fabrication, preparation, hauling, handling charges, and erecting; including gate and gate posts, posts caps, braces, miscellaneous fitting and fastenings, latches, hinges, stops and holding devices; and for all manipulation, labor, tools, concrete for setting posts, equipment and incidentals necessary complete installation.

507.7. BID ITEM:

Item 507.1 - Chain Link Wire Fence - (4 ft. high) - per linear foot

Item 507.2 - Chain Link Wire Fence - (6 ft. high) - per linear foot

Item 507.3 - Chain Link Wire Fence - (8 ft. high) - per linear foot

Item 507.4 - Gates - Pedestrian - per each

Item 507.5 - Gates - Vehicular - per opening

ITEM

520 HYDROMULCHING

520.1. DESCRIPTION: *This item shall govern for preparing ground, providing for sowing of seeds, mulching with 70/30 wood/cellulous blend fiber mulch, and other management practices along and across such areas as are designated on the plans and in accordance with these specifications. All areas shall be covered with live grass before acceptance.*

520.2. MATERIALS:

A. Seeds. All seed must meet the requirements of the Texas Seed Law including the labeling requirements for showing purity, germination, name and type of seed. Seed furnished shall be of the previous season's crop for the date of the project. Each variety of seed shall be furnished and delivered in separate bags or containers. A sample of each variety shall be furnished for analysis and testing when directed by the Engineer. The amount of seed planted per acre shall be of the type specified below and shall equal or exceed the following percentages for purity and germination or an equivalent amount of pure live seed.

- Common Name: Bermuda and Giant Bermuda grass (hulled)
- Scientific Name: Cynodon Dactylon
- Purity: 95%
- Germination: 90%

Annual Rye grass will be free of Johnson grass, field bind weed, dodder seed, and free of other seed to the limits allowable under the Federal Seed Act and applicable State Seed Laws.

Annual Rye grass will be added into slurry between October 1 and March 15. No additional cost will be charged to the City.

B. 70/30 Wood/Cellulose Blend Fiber Mulch. Wood/Cellulose blend fiber mulch shall consist of 70% long wood grain fibers produced from grinding clean, whole wood chips and 30% cellulose fiber produced from ground newsprint. Mulch fibers shall be free of abrasive or hard contaminants which would inhibit hydraulic pumping. The mulch fibers must maintain uniform suspension in water under agitation and shall blend with grass seed, fertilizer, and other additives to form homogeneous slurry. Upon application, the mulch material shall form a blotter-like mat covering the ground. This mat shall have the characteristics of water absorption and percolation and shall cover and bond grass seed in contact with the soil. The wood fiber mulch shall be dyed green to aid visual metering during application. The dye shall be biodegradable and not inhibit plant growth. The wood fiber mulch shall also conform to the following specifications:

1. Percent moisture content (maximum) 12.5% ±3.0%

2. Percent organic matter

a. Wood fiber (minimum) 70% ±0.8% O.D. Basis[1]

[1] Oven Dry Basis

b. Paper fiber (maximum) 30.0% ±0.8% O.D. Basis

3. Percent ash content 1.0% +0.2% O.D. Basis

4. Ph 4.8% ±0.5%

5. Water holding capacity (minimum) 1,000 Grams of water per 100 grams of fiber

The wood fiber mulch shall be packaged in units' not exceeding 100 lbs. and shall be suitable for outdoors storage for up to six months. The package shall contain, on current labels, the manufacturer's name and address, net weight, and customer service telephone number.

C. Fertilizers. Fertilizer shall have a chemical analysis of 15-15-15 with micronutrients and shall be water soluble (The figures in the analysis represent the percent of nitrogen, phosphoric acid and potash nutrients, respectively). Fifty percent or greater of the Nitrogen required shall be in the form of Nitrate Nitrogen ($N0_3$). The remaining Nitrogen required may be in the form urea Nitrogen ($C0(NH_2)_2$).

In the event it is necessary to substitute a fertilizer of a different analysis, it shall be a pelleted or granulated fertilizer with a lower concentration, but the total amount of nutrients furnished and applied per acre shall equal or exceed that specified for each nutrient.

The fertilizer shall be dry and in good physical condition. Fertilizer that is powdered or caked will be rejected.

D. Tactifier and Binder. Natural vegetable gum containing gelling and hardening agents that when mixed with water and properly cured, shall form an insoluble network.

E. Water. Shall be furnished by the contractor and shall be clean and free of substances harmful to the growth of vegetation.

F. Herbicide. Herbicide used shall be an easy to apply, effective in a short term, chemical agent to inhibit or destroy weed growth, while being harmless to seed and grass being implanted.

G. Topsoil. Topsoil shall conform to the provisions of Item 515, "Topsoil."

520.3. EQUIPMENT: Provide the machinery, tools and equipment necessary for proper prosecution of the work. All machinery, tools and equipment used shall be maintained in a satisfactory and workmanlike manner.

520.4. CONSTRUCTION:

A. General. Security of stored hydromulch materials will be the sole responsibility of the Contractor at no additional expense to the City.

It is the contractor's responsibility to verify the location of all utility lines, electric cables, sprinkling systems and conduits so that the proper precautions must be taken not to disturb or damage any subsurface improvements. Should obstructions be found, the Contractor will promptly notify the City Inspector. Any damage caused by the contractor shall be repaired by himself at no cost to the City. Any such repairs shall be subject to approval by the Inspector.

B. Preparation of Subsoil. Inspect subsoil for the presence of objectionable materials, such as rocks (2 inches in diameter and larger), concrete waste, building debris, weeds, grass or other

material that would be detrimental to the growth of grasses. Protect existing underground improvements from damage.

Cultivate to a depth of 3 inches in areas to receive hydromulch. If compaction is due to equipment, traffic or storage, cultivate to a depth of 6 inches, and apply herbicide as directed by manufacturer.

Remove any foreign or objectionable materials collected during cultivation.

Grade placement area to eliminate rough spots and low areas where ponding may occur. Assure positive drainage away from all buildings. Maintain smooth, uniform grades.

Hydromuch area and weed control shall consist of killing all weeds and maintaining a weed-free condition until completion of the project by applying herbicide as directed by the manufacturer.

C. Seeded Lawns. The following construction sequences and procedures shall be observed:

1. The contractor shall notify the Inspector not less than 48 hours in advance of any seeding operation and shall not begin the work until areas prepared or designated for seeding have been approved.

2. Before placement of hydromulch, all areas shall be cultivated to a depth of 3 inches unless otherwise specified or ordered by the Engineer. Cultivation of the soil may be done by disc, spring tooth harrow, roto-tiler, or similar equipment. This operation shall be done at right angles to the natural flow of water on the slopes.

3. The area shall then be rolled in two directions; the second shall be done at right angles to the first rolling.

4. Rake the area to make it smooth and level. Add soil where necessary or as directed by the Inspector.

5. The finished grade shall be 1 inch below all curbs, sidewalks, and/or other appurtenances.

6. Apply the fertilizer at the rate and mixture specified. The fertilizer shall be applied by an approved hand or mechanical method.

7. Roll the area in one direction.

8. Slurry to be sprayed evenly in two intersecting directions with a hydraulic seeder.

9. Erect a barrier of stakes and strings, and post warning signs where necessary, or as directed by the Inspector.

10. Apply water as required to keep the mulch damp at all times throughout germination and initial growth period as determined by the Inspector.

11. Upon completion, all excess material shall be removed and disposed of off the project site at contractor's expense.

D. Slurry. The slurry will be mixed and spread uniformly over the area at the following rate for both residential and commercial areas:

- 70/30 Wood/Cellulose Blend Fiber Mulch 2,000 lb/acre
- Fertilizer 400 lb/acre
- Bermuda 1.5 lb/1,000 sq ft
- Annual Ryegrass (Oct. through March 15) 20 lbs per 1,000 sq ft
- Water and binder shall be added according to manufacturer's recommendations.

E. **Guarantee and Lawn Established Period.** The guarantee and lawn established period shall begin immediately after the completion of the planting and shall start with the Provisional Acceptance and end with the Final Acceptance.

1. **Provisional Acceptance.** Upon completion of hydromulching and written request of Contractor, the Inspector will inspect all the work for Provisional Acceptance.

2. **Guarantee Period.** The guarantee period shall begin upon completion of the provisional acceptance. All plant materials shall be guaranteed by the Contractor for a period of thirty days (30) from the date of provisional acceptance, to be in good, healthy, and nourished condition. The exceptions are damages resulting from neglect by the property owner, abuse or damage by others, or unusual phenomena or incidents which are beyond the Contractor's control.

   During the lawn establishment period, it shall be the contractor's responsibility to ensure the continuing healthy growth. This care shall include labor, water and material necessary to keep the project in a presentable condition, including but not limit to removal of litter, mowing, trimming, removal of grass clippings, edging, fertilization, insecticide and fungicide applications, weed control, and repair and reseeding any and all damaged areas.

   Water application shall be accomplished each week from March through October. An even application of one inch minimum of water shall be required over all lawn areas weekly. The rate and frequency of water application may be changed, as directed by the Inspector, depending on weather, and soil conditions.

3. **Replacement.** The Contractor shall replace, without cost to the City, and as soon as weather conditions permit, all dead grassed areas not in a vigorous, thriving condition, as determined by the Inspector during and at the end of the guarantee period. Replacements shall be subject to all requirements stated in this specification. The Contractor shall make all necessary repairs to grades, grassed areas, and terrace paving required because of grass replacement at no cost to the City.

4. **Final Inspection and Acceptance.** At the end of the guarantee period and upon written request of the contractor, the Inspector will inspect all guaranteed work for final acceptance. The written request shall be submitted to the City ten (10) days prior to the anticipated date of inspection.

   Acceptance of hydromulching lawn as herein specified shall be based on a uniform stand of grass and a uniform grade at the time of final inspection. Area of two square feet or more that are bare or have a poor stand of grass and area not having a uniform grade for any cause before final inspection shall be regraded, rehydromulched and reseeded as specified at the Contractor's expense.

Upon completion by the Contractor of all repairs or renewals which may appear at that time to be necessary in the judgment of the City or its authorized representative, the final acceptance of the hydromulching will be issued.

520.5. MEASUREMENT: Measurement of acceptable "Hydromulching," complete in place, shall be made by the square yard and only for those areas designated on the plans, or for other areas directed by the Inspector. Fertilizers, wood cellulose fibers, seeds, herbicide and water will not be measured for payment.

520.6. PAYMENT: "Hydromulching," measured as provided above, will be paid for at the contract unit price bid per square yard, which price shall be full compensation for furnishing, hauling and placing all materials, for all fertilizer and water required and for all labor, tools, equipment and incidentals necessary to complete the work.

520.7. BID ITEM:

Item 520.1 - Hydromulching (Residential or Commercial) - per square yard

ITEM

524 CONCRETE STEPS

524.1. DESCRIPTION: *This item shall govern the installation of concrete steps composed of Portland Cement concrete, constructed as herein specified on an approved subgrade, in conformity to the lines, grades and details shown on the plans or as established by the Engineer.*

524.2. MATERIALS: Materials shall conform to the provisions of the following Items:

A. Concrete. Item 300, "Concrete," Class "A" or shall be of the class as noted on the plans.

B. Reinforcing Steel. Item 301, "Reinforcing Steel"

C. Welded Wire-Flat Sheets. Item 303, "Welded Wire Flat Sheets"

D. Expansion Joint Materials. Item 307.2.E, "Expansion Joint Materials"

E. Membrane Curing Compound. Item 307.2.H, "Curing Materials"

524.3. EQUIPMENT: Provide the machinery, tools and equipment necessary for proper prosecution of the work. All machinery, tools and equipment used shall be maintained in a satisfactory and workmanlike manner.

524.4. CONSTRUCTION:

A. Subgrade Preparation. The subgrade shall be excavated and shaped to the lines, grades and cross section shown on the plans, or as directed by the Engineer, and shall be sprinkled and thoroughly compacted.

B. Subbase Placement. A cushion, 2 inches minimum thickness, of crusher screenings, gravel, crushed rock or flex base material shall be spread, thoroughly, tamped and leveled. The cushion shall be moist at the time the concrete is placed. Where the subgrade is rock or gravel, 70% percent of which rock, the 2 inch cushion need not be used. The Inspector will determine if the subgrade meets the above requirement.

If the subgrade is undercut, or the natural ground is below "top of subgrade," then necessary backfill shall be made with an approved material and compacted with a mechanical tamper. Hand tamping will not be permitted.

The foundation shall be level and uniformly compacted to prevent future settlement.

C. Concrete Forms. Forms shall be of metal or well-seasoned wood of a section satisfactory to the Inspector; clean, straight, free from warp, and of a depth equal to the thickness of the finished work. All forms shall be securely staked to line and grade and maintained in a true position during the depositing of concrete. Before concrete is placed, forms shall be thoroughly oiled with a light form oil.

D. Expansion Joints. Expansion joint material, ½ inch thick, shall be provided where the new construction abuts the existing sidewalks if the Engineer deems it necessary or if shown on the plans. The expansion joint material shall be placed vertically and shall extend the full

depth of the concrete. Similar expansion material shall be placed around all obstructions protruding through the steps.

E. Reinforcement. Concrete steps shall be reinforced as shown on the plans. Care shall be exercised to keep all steel in its proper position during the depositing of concrete. Splices in the No. 3 bars shall have a minimum lap of 12 inches.

F. Concrete Placement and Finishing. Concrete shall be placed in the forms and spaded, tamped and thoroughly compacted until mortar entirely covers the surface and has a monolithic finish. The top surface shall be floated and troweled to a uniform smooth surface, then finished with a camel hair brush or wood float to a gritty texture. The outer edges and joints shall be rounded with approved tools to the radii shown on the plans.

G. Curing. Immediately after finishing, the surface shall be protected by a membrane-compound curing agent, or by wetted cotton or burlap mats. Either method shall be subject to approval by the Inspector.

H. Filling and Grading. Complete all necessary excavation, filling and grading of the slopes, adjacent to the completed concrete steps. The adjacent excavation and grading of the slopes shall be done in a manner acceptable to the Engineer.

524.5. MEASUREMENT: Accepted work as performed as prescribed by this item will be measured by the cubic yard of concrete complete in place.

524.6. PAYMENT: The work performed as prescribed by this item will be paid for at the contract unit price bid per cubic yard for "Concrete Steps" which price shall be full compensation for preparing the subgrade; for furnishing and placing all materials including all reinforcing steel and expansion joint materials and for any other materials, manipulation, labor, tools, equipment and incidentals necessary to complete the work. Excavation, filling and grading of the slopes, adjacent to the completed concrete steps will be considered incidental work pertaining to this item and will not be paid for directly.

524.7. BID ITEM:

Item 524.1 - Concrete Steps - per cubic yard

ITEM

530 BARRICADES, SIGNS, AND TRAFFIC HANDLING

530.1. DESCRIPTION: *This item shall govern for providing, installing, moving, repairing, maintaining, cleaning and removing upon completion of work, all barricades, signs, cones, lights and other such type devices and of handling traffic as indicated on the plans or as directed by the Engineer.*

530.2. GUIDELINES FOR BARRICADING ON CITY RIGHT-OF-WAY: The barricade contractor must locally maintain sufficient materials in stock to accommodate three or more construction phases per project. These will include all applicable traffic control sign types, trucks, trailers, arrow boards, and all other traffic control devices assigned to the Contractor's barricading operation.

The *Texas Manual on Uniform Traffic Control Devices (TMUTCD)*, Section 6A-6, requires the appropriate training for all personnel who are involved in the selection, placement, and maintenance of traffic control devices on construction projects. The City of San Antonio requires that all personnel associated with barricading operations and traffic handling possess certificates from either of the two groups listed in Table 1 below. Each certificate will be valid for four years.

Table 1
Barricading Training

Texas Engineering Extension Service	American Traffic Safety Service Association
Work Zone Traffic Control	Training Course for Worksite Traffic Supervisors

The Contractor shall have a minimum of one barricade supervisor and three persons who are responsible for construction work zone traffic control. These persons shall be based in the San Antonio metropolitan area and their sole tasks shall be implementing and maintaining construction work zone traffic control devices.

The Contractor shall have a commercial telephone answering service during non-working hours. The Contractor shall provide the City during working hours with an office telephone number, pager number, and cellular telephone number to contact the barricading supervisor. The contractor must be able to respond to any call within two hours. The barricading contractor or General Contractor must possess liability insurance in the minimum amount of one million dollars. A copy of the liability policy must be sent to the City Traffic Engineer for approval 48 hours prior to starting barricading operations.

The contractor shall comply with all standards set forth in the plan barricade detail sheets. One noncompliance letter issued by the City to the Contractor in regard to construction work zone traffic control, and not corrected within 48 hours, will be cause for delay of payment for this item.

If the general contractor elects to do his own barricading, he must comply with all the foregoing requirements. Additionally, a general contractor will be required to submit a traffic control plan (TCP) at least 72 hours in advance (excluding weekends and holidays) of starting work in each construction phase. Upon satisfactory evidence of competent barricading expertise, this requirement for a traffic control plan may be waived by the City Traffic Engineer.

530.3. EQUIPMENT: Provide the machinery, tools and equipment necessary for proper prosecution of the work. All machinery, tools and equipment used shall be maintained in a satisfactory and workmanlike manner.

530.4. CONSTRUCTION: All barricades, signs, and other types of devices listed above shall conform to the requirements of the TMUTCD. It is the contractor's responsibility to see that all traffic control devices are properly installed and maintained at the job site. If it is determined by the Traffic Engineering Representative that the traffic control devices do not conform to the established standards, or are incorrectly placed to protect the general public, the Traffic Engineer shall have the option to stop the work, at no expense to the City, until the situation is corrected by the Contractor. If it is determined that additional temporary traffic control devices, special directional devices, and/or business name signs are required, they will be provided by the contractor at no additional cost. As work progresses, the location of temporary traffic control devices will be adjusted and modified as necessary by the Contractor.

All retro reflective traffic control devices such as barricades, vertical panels, signs, etc., shall be maintained by cleaning, replacing or a combination thereof such that during darkness and rain, the retro reflective characteristics shall equal or exceed the retro reflective characteristics of the standard reflective panels in the Inspector's possession.

The contractor shall contact the City of San Antonio Traffic Operations Section prior to removing any traffic signs or traffic signals. Prior to completion of the contract and removal of barricades, all applicable permanent traffic signs and signals must be in place and functioning properly. All permanent signs or traffic control devices missing or damaged during construction shall be replaced at the contractor's expense. Permanent pavement marking shall be applied prior to the opening of any street to traffic. Temporary short-term expendable pavement markings may be provided prior to application of permanent markings.

The contractor must maintain all streets open to through traffic by repairing trenches, potholes, etc., at no direct payment. The contractor shall provide reasonable access to residences and all businesses within all phases of the work, as well as providing suitable access accommodations for school children, pedestrians, garbage pick-up and mail delivery by the US Postal Service. Temporary pedestrian crossing will be determined in the field by the Police Department School Services Unit. Temporary pedestrian crossings shall be 4 feet wide by 4 inches thick asphalt treated base or asphaltic concrete and will be paid for under Item 206, "Asphalt Treated Base" or Item 205, "Hot Mix Asphaltic Concrete Pavement," respectively.

When flagging is required by the plans or Traffic Control Plan, provide a Contractor representative who has been certified as a flagging instructor through courses offered by the Texas Engineering Extension Service, the American Traffic Safety Services Association, the National Safety Council, or other approved organizations. Provide the certificate indicating course completion when requested. This representative is responsible for training and assuring that all flaggers are qualified to perform flagging duties. A qualified flagger must be independently certified by one of the organizations listed above or trained by the Contractor's certified flagging instructor. Provide the Engineer with a current list of qualified flaggers before beginning flagging activities. Use only flaggers on the qualified list.

Flaggers must be courteous and able to effectively communicate with the public. When directing traffic, flaggers must use standard attire, flags, signs, and signals and follow the flagging procedures set forth in the TMUTCD.

530.5. MEASUREMENT: This item will be measured by "Lump Sum" as indicated on the plans.

530.6. PAYMENT: This item will be paid for at the contract lump sum price bid for "barricades, signs, and traffic handling". This price shall be full compensation for furnishing all labor, materials, supplies, equipment and incidentals necessary. To complete the work as specified. The lump sump price will be pro-rated based on the number of workdays in the project contract. Failure to complete the work within time allowed in the project contract due to approving designs, testing, material shortages, closed construction season, curing periods, and testing periods will not qualify for additional compensation. When additional work is added by an approved field alteration or when work is suspended for the convenience of the City, through no fault of the contractor, additional compensation may be paid to the Contractors.

530.7. BID ITEM:

Item 530.1 - Barricades, Signs and Traffic Handling - lump sum

ITEM

540 TEMPORARY EROSION, SEDIMENTATION AND WATER POLLUTION PREVENTION AND CONTROL

540.1. DESCRIPTION: *This item shall govern the control measures necessary to prevent and control soil erosion, sedimentation and water pollution which may degrade receiving waters including rivers, streams, lakes, reservoirs, tidal water, groundwater and wetlands.*

Note: The control measures contained herein shall be installed and maintained throughout the construction contract and coordinated with the permanent or existing temporary pollution control features specified elsewhere on the plans and in the specifications to assure effective and continuous water pollution control throughout the construction and post construction period. These control measures shall not be used as a substitute for the permanent pollution control measures unless otherwise directed by the Engineer in writing. The controls may include sediment control fences, inlet protection, baled hay, rock filter dams, dikes, swales, sediment traps and basins, pipe slope drains, paved flumes, construction exits, temporary seeding, sodding, mulching, soil retention blankets or other structural or non-structural water pollution controls. This item does not apply to commercial operations.

540.2. MATERIALS: The items, estimated quantities and locations of the control measures are shown on the plans; however, the Engineer may increase or decrease the quantity of these items as the need arises. The materials will be shown on the plans and in this specification. The Engineer may allow other materials and work as the need arises and as approved in writing. Pollution control measures may be applicable to contractor operations outside the right of way where such work is necessary as a result of roadway related construction such as construction and haul roads, field offices, equipment and supply areas, and materials sources.

Unless otherwise shown on the plans, provide materials that meet the following requirements:

A. Rock Filter Dams.

1. **Aggregate.** Furnish aggregate with hardness, durability, cleanliness, and resistance to crumbling, flaking, and eroding acceptable to the Engineer. Provide the following:

   - **Types 1, 2, and 4 Rock Filter Dams.** Use 3 to 6 in. aggregate.

   - **Type 3 Rock Filter Dams.** Use 4 to 8 in. aggregate.

2. **Wire.** Provide minimum 20 gauge galvanized wire for the steel wire mesh and tie wires for Types 2 and 3 rock filter dams. Type 4 dams require:

   - a double-twisted, hexagonal weave with a nominal mesh opening of 2½ in. x 3¼ in.;
   - minimum 0.0866 in. steel wire for netting;
   - minimum 0.1063 in. steel wire for selvages and corners; and
   - minimum 0.0866 in. for binding or tie wire.

3. **Sandbag Material.** Furnish sandbags meeting Section 540.2.I, “Sandbags,” except that any gradation of aggregate may be used to fill the sandbags.

B. Temporary Pipe Slope Drains. Provide corrugated metal pipe, polyvinyl chloride (PVC) pipe, flexible tubing, watertight connection bands, grommet materials, prefabricated fittings, and flared entrance sections that conform to the plans. Recycled and other materials meeting these requirements are allowed if approved. Furnish concrete in accordance with Item 505, "Concrete Riprap."

C. Baled Hay. Provide hay bales weighing at least 50 lb., composed entirely of vegetable matter, measuring 30 in. or longer, and bound with wire, nylon, or polypropylene string.

D. Temporary Paved Flumes. Furnish asphalt concrete, hydraulic cement concrete, or other comparable non-erodible material that conforms to the plans. Provide rock or rubble with a minimum diameter of 6 in. and a maximum volume of ½ cu. ft. for the construction of energy dissipaters.

E. Construction Exits. Provide materials that meet the details shown on the plans and this Section.

1. **Rock Construction Exit.** Provide crushed aggregate for long and short-term construction exits. Furnish aggregates that are clean, hard, durable, and free from adherent coatings such as salt, alkali, dirt, clay, loam, shale, soft, or flaky materials and organic and injurious matter. Use 4- to 8- in. rock for Type 1 and 2- to 4- in. rock for Type 3. Unless otherwise shown on the plans, provide a light weight (4 oz.) non-woven filter fabric below the ballast to prevent mud and sediment migration.

2. **Timber Construction Exit.** Furnish No. 2 quality or better railroad ties and timbers for long-term construction exits, free of large and loose knots and treated to control rot. Fasten timbers with nuts and bolts or lag bolts, of at least ½ in. diameter, unless otherwise shown on the plans or allowed. For short-term exits, provide plywood or pressed wafer board at least ½ in. thick.

3. **Foundation Course.** Provide a foundation course consisting of flexible base, bituminous concrete, hydraulic cement concrete, or other materials as shown on the plans or directed.

F. Embankment for Erosion Control. Provide rock, loam, clay, topsoil, or other earth materials that will form a stable embankment to meet the intended use.

G. Pipe. Provide pipe outlet material in accordance with TxDOT Standard Specification Item 556, "Pipe Underdrains," and details shown on the plans.

H. Construction Perimeter Fence.

1. **Posts.** Provide essentially straight wood or steel posts that are at least 60 in. long. Furnish soft wood posts with a minimum diameter of 3 in. or use 2 x 4 boards. Furnish hardwood posts with a minimum cross-section of 1½ x 1-1/5 in. Furnish T- or L-shaped steel posts with a minimum weight of 0.95 lb. per foot.

2. **Fence.** Provide orange construction fencing as approved by the Engineer.

3. **Fence Wire.** Provide 14 gauge or larger galvanized smooth or twisted wire. Provide16 gauge or larger tie wire.

4. **Flagging.** Provide brightly-colored flagging that is fade-resistant and at least ¾ in. wide to provide maximum visibility both day and night.

5. **Staples.** Provide staples with a crown at least ½ in. wide and legs at least ½ in. long.

6. **Used Materials.** Previously used materials meeting the applicable requirements may be used if accepted by the Engineer.

I. **Sandbags.** Provide sandbag material of polypropylene, polyethylene, or polyamide woven fabric with a minimum unit weight of 4 oz. per square yard, a Mullen burst-strength exceeding 300 psi, and an ultraviolet stability exceeding 70%. Use natural coarse sand or manufactured sand meeting the gradation given in Table 1 to fill sandbags. Filled sandbags must be 24 to 30 in. long, 16 to 18 in. wide, and 6 to 8 in. thick.

Table 1
Sand Gradation

Sieve #	Maximum Retained (% by Weight)
4	3%
100	80%
200	95%

J. **Temporary Sediment Control Fence.** Provide a net-reinforced fence using woven geo-textile fabric. Logos visible to the traveling public will not be allowed.

1. **Fabric.** Provide fabric materials in accordance with TxDOT DMS-6230, "Temporary Sediment Control Fence Fabric."

2. **Posts.** Provide essentially straight wood or steel posts with a minimum length of 48 in., unless otherwise shown on the plans. Soft wood posts must be at least 3 in. in diameter or nominal 2 x 4 in. Hardwood posts must have a minimum cross-section of 1½ x 1½ in. T- or L-shaped steel posts must have a minimum weight of 0.95 lb. per foot.

3. **Net Reinforcement.** Provide net reinforcement of at least 14 gauge galvanized welded wire mesh, with a maximum opening size of 2 x 4 in., at least 24 in. wide, unless otherwise shown on the plans.

4. **Staples.** Provide staples with a crown at least ¾ in. wide and legs ½ in. long.

5. **Used Materials.** Use recycled material meeting the applicable requirements if accepted by the Engineer.

K. **Curb Inlet Gravel Filters.**

1. **Gravel Filter Bags.** Furnish gravel filter bags meeting Section 540.2.I, "Sandbags." Gravel bags shall be filled with ¾ inch gravel.

2. **Concrete Masonry Units.** Hollow, Non-Load-Bearing Concrete blocks of 1500-2000 psi, 28-day compressive strength concrete shall be used with dimensions of 8" x 6" x6" width, height, and length, respectively.

3. **Wood Blocks.** Wolmanized treated 2" x 4" lumber with the length as per inlet size.

540.3. EQUIPMENT. Provide a backhoe, front end loader, blade, scraper, bulldozer, or other equipment as required when "Earthwork for Erosion Control" is specified on the plans as a bid item.

540.4. CONSTRUCTION: The contractor shall provide control measures to prevent or minimize the impact to receiving waters as required by the plans and/or as directed by the Engineer in writing.

A. Contractor Responsibilities.

1. **SW3P.** Implement the City's Storm Water Pollution Prevention Plan (SWP3) for the project site in accordance with the specific or general storm water permit requirements. Prevent water pollution from storm water associated with construction activity from entering any surface water or private property on or adjacent to the project site. The Contractor shall effectively prevent and control erosion and sedimentation on the site at the earliest practicable time as outlined in the approved schedule. Control measures, where applicable, will be implemented prior to the commencement of each construction operation or immediately after the area has been disturbed.

2. **Preconstruction Submittals.**

   a. **Operations on Right of Way.** Prior to the start of construction, the Contractor shall submit to the Engineer, for approval, schedules for accomplishment of the pollution control measures in accordance with the Storm Water Pollution Prevention Plan (SW3P). A plan for the disposal of waste materials generated on the project site must be submitted for approval, also. The Contractor shall submit to the Engineer, for approval, the proposed SW3P for the industrial activities (such as hot mix plants, concrete batch plants, or material handling areas) on the right of way.

   b. **Operations off Right of Way.** The Contractor shall provide the Engineer, for information purposes only, proposed methods of pollution control for Contractor operations in areas which are outside the right of way (such as construction and haul roads, field offices, equipment and supply areas, and material sources).

      Pollution control measures for the Contractor's facilities off the right of way are not covered by the City's Environmental Protection Agency (EPA) NPDES general permit. The Contractor shall obtain his own Notice of Intent for the off-site operations. These pollution controls will not be measured for payment but shall be performed at the Contractor's expense.

B. General.

1. **Phasing.** Implement control measures in the area to be disturbed before beginning construction, or as directed. Limit the disturbance to the area shown on the plans or as directed. If, in the opinion of the Engineer, the Contractor cannot control soil erosion and sedimentation resulting from construction operations, the Engineer will limit the disturbed area to that which the Contractor is able to control. Minimize disturbance to vegetation.

2. **Rainfall Events.** A rain gauge shall be provided by the Contractor and located at the project site. Within 24 hours of a rainfall event of ½ inch or more as measured by the project rain gauge, the Contractor and Inspector will inspect the entire project to

determine the condition of the control measures. Maintain control measures in accordance with Item 540.4.B.3, "Maintenance."

3. **Maintenance.** Correct ineffective control measures in accordance with this section. Implement additional controls as directed. Remove excavated material within the time requirements specified in the applicable storm water permit.

   Following a rain event as described in Item 540.4.B.2, Rainfall Event," sediment will be removed and devices repaired as soon as practicable but no later than 7 days after the surrounding exposed ground has dried sufficiently to prevent further damage from equipment needed for repair of control measures.

   In the event of continuous rainfall over a 24-hour period, or other circumstances that preclude equipment operation in the area, the Contractor will hand carry and install additional backup devices as determined by the Engineer. The Contractor will remove silt accumulations and deposit the spoils in an area approved by the Engineer as soon as practical. Any corrective action needed for the control measures will be accomplished in the sequence directed by the Engineer; however, areas adjacent to waterbodies shall generally have priority followed by devices protecting storm sewer inlets.

4. **Stabilization.** Stabilize disturbed areas where construction activities will be temporarily stopped, or construction becomes inactive, in accordance with the applicable storm water permit. Inactive construction areas are defined as areas in which no construction activity will occur for a period of 30 days or longer. Inactive construction areas which have been disturbed will require stabilization through the use of vegetation, mulch, erosion control matting or structural methods within 7 calendar days from the last construction activity in the area. At all times prior to stabilization, inactive construction areas shall be considered as active, disturbed construction area, contributing to the sediment loading at the site control systems. After stabilization, inactive construction areas will be considered undisturbed areas, eliminating the contribution of sediment to the erosion control devices.

5. **Finished Work.** Upon acceptance of vegetative cover, remove and dispose of all temporary control measures, temporary embankments, bridges, matting, falsework, piling, debris, or other obstructions placed during construction that are not a part of the finished work, or as directed. Soil retention blankets shall be removed only when, in the opinion of the Engineer, final permanent perennial seeding would be adversely affected by the presence of an existing soil retention blanket.

   The project will not be accepted until a 70% density of existing adjacent undisturbed areas is obtained, unless otherwise shown on the plans. When shown on the plans, the Engineer may accept the project when adequate controls are in place that will control erosion, sedimentation, and water pollution until sufficient vegetative cover can be established.

6. **Restricted Activities.** Do not locate disposal areas, stockpiles, or haul roads in any wetland, water body, or streambed. Do not install temporary construction crossings in or across any water body without the prior approval of the appropriate resource agency and the Engineer. Restrict construction operations in any water body to the necessary areas as shown on the plans or applicable permit, or as directed. Use temporary bridges, timber mats, or other structurally sound and non-eroding material for stream crossings.

Provide protected storage area for paints, chemicals, solvents, and fertilizers at an approved location. Keep paints, chemicals, solvents, and fertilizers off bare ground and provide shelter for stored chemicals.

C. Installation, Maintenance, and Removal Work. Perform work in accordance with the specific or general storm water permit. Install and maintain the integrity of temporary erosion and sedimentation control devices to accumulate silt and debris until earthwork construction and permanent erosion control features are in place or the disturbed area has been adequately stabilized as determined by the Engineer. If a device ceases to function as intended, repair or replace the device or portions thereof as necessary. Remove sediment, debris, and litter. When approved, sediments may be disposed of within embankments, or in the right of way in areas where the material will not contribute to further siltation. Dispose of removed material in accordance with federal, state, and local regulations. Remove devices upon approval or when directed. Upon removal, finish-grade and dress the area. Stabilize disturbed areas in accordance with the permit, and as shown on the plans or directed. The Contractor retains ownership of stockpiled material and must remove it from the project when new installations or replacements are no longer required.

1. **Rock Filter Dams for Erosion Control.** Remove trees, brush, stumps, and other objectionable material that may interfere with the construction of rock filter dams. Place sandbags as a foundation when required or at the Contractor's option. For Types 1, 2, 3, and 5, place the aggregate to the lines, height, and slopes specified, without undue voids. For Types 2 and 3, place the aggregate on the mesh and then fold the mesh at the upstream side over the aggregate and secure it to itself on the downstream side with wire ties, or hog rings, or as directed. Place rock filter dams perpendicular to the flow of the stream or channel unless otherwise directed. Construct filter dams according to the following criteria, unless otherwise shown on the plans:

   a. **Type 1 (Non-reinforced).**

      (1) **Height.** At least 18 in. measured vertically from existing ground to top of filter dam.

      (2) **Top Width.** At least 2 ft.

      (3) **Slopes.** At most 2:1.

   b. **Type 2 (Reinforced).**

      (1) **Height.** At least 18 in. measured vertically from existing ground to top of filter dam.

      (2) **Top Width.** At least 2 ft.

      (3) **Slopes.** At most 2:1.

   c. **Type 3 (Reinforced).**

      (1) **Height.** At least 36 in. measured vertically from existing ground to top of filter dam.

      (2) **Top Width.** At least 2 ft.

(3) **Slopes.** At most 2:1.

d. **Type 4 (Sack Gabions).** Unfold sack gabions and smooth out kinks and bends. For vertical filling, connect the sides by lacing in a single loop–double loop pattern on 4- to 5-in. spacing. At one end, pull the end lacing rod until tight, wrap around the end, and twist 4 times. At the filling end, fill with stone, pull the rod tight, cut the wire with approximately 6 in. remaining, and twist wires 4 times. For horizontal filling, place sack flat in a filling trough, fill with stone, and connect sides and secure ends as described above. Lift and place without damaging the gabion. Shape sack gabions to existing contours.

e. **Type 5.** Provide rock filter dams as shown on the plans.

2. **Temporary Pipe Slope Drains.** Install pipe with a slope as shown on the plans or as directed. Construct embankment for the drainage system in 8-in. lifts to the required elevations. Hand-tamp the soil around and under the entrance section to the top of the embankment as shown on the plans or as directed. Form the top of the embankment or earth dike over the pipe slope drain at least 1 ft. higher than the top of the inlet pipe at all points. Secure the pipe with hold-downs or hold-down grommets spaced a maximum of 10 ft. on center. Construct the energy dissipaters or sediment traps as shown on the plans or as directed. Construct the sediment trap using concrete in accordance with Item 505, "Concrete Riprap," when designated on the plans. Rubble riprap in accordance with TxDOT Standard Specification Item 432, "Riprap" may also be used when designated on the plans or as directed by the Engineer.

3. **Baled Hay for Erosion and Sedimentation Control.** Install hay bales at locations shown on the plans by embedding in the soil at least 4 in. and, where possible, approximately ½ the height of the bale, or as directed. Fill gaps between bales with hay.

4. **Temporary Paved Flumes.** Construct paved flumes as shown on the plans or as directed. Provide excavation and embankment (including compaction of the subgrade) of material to the dimensions shown on the plans, unless otherwise indicated. Install a rock or rubble riprap energy dissipater, constructed from the materials specified above to a minimum depth of 9 in. at the flume outlet to the limits shown on the plans or as directed.

5. **Construction Exits.** When tracking conditions exist, prevent traffic from crossing or exiting the construction site or moving directly onto a public roadway, alley, sidewalk, parking area, or other right of way areas other than at the location of construction exits. Construct exits for either long or short-term use.

a. **Long-Term.** Place the exit over a foundation course, if necessary. Grade the foundation course or compacted subgrade to direct runoff from the construction exits to a sediment trap as shown on the plans or as directed. Construct exits with a width of at least 14 ft. for one-way and 20 ft. for two-way traffic for the full width of the exit, or as directed.

(1) **Type 1.** Construct to a depth of at least 8 in. using crushed aggregate as shown on the plans or as directed.

(2) **Type 2.** Construct using railroad ties and timbers as shown on the plans or as directed.

b. **Short-Term.**

(1) **Type 3.** Construct using crushed aggregate, plywood, or wafer board. This type of exit may be used for daily operations where long-term exits are not practical.

(2) **Type 4.** Construct as shown on the plans or as directed.

6. **Earthwork for Erosion and Sediment Control.** Perform excavation and embankment operations to minimize erosion and to remove collected sediments from other erosion control devices.

a. **Excavation and Embankment for Erosion Control Features.** Place earth dikes, swales or combinations of both along the low crown of daily lift placement, or as directed, to prevent runoff spillover. Place swales and dikes at other locations as shown on the plans or as directed to prevent runoff spillover or to divert runoff. Construct cuts with the low end blocked with undisturbed earth to prevent erosion of hillsides. Construct sediment traps at drainage structures in conjunction with other erosion control measures as shown on the plans or as directed. Where required, create a sediment basin providing 3,600 cu. ft. of storage per acre drained, or equivalent control measures for drainage locations that serve an area with 10 or more disturbed acres at one time, not including offsite areas.

b. **Excavation of Sediment and Debris.** Remove sediment and debris when accumulation affects the performance of the devices, after a rain, and when directed.

7. **Construction Perimeter Fence.** Construct, align, and locate fencing as shown on the plans or as directed.

a. **Installation of Posts.** Embed posts 18 in. deep or adequately anchor in rock, with a spacing of 8 to 10 ft.

b. **Wire Attachment.** Attach the top wire to the posts at least 3 ft. from the ground. Attach the lower wire midway between the ground and the top wire.

c. **Flag Attachment.** Attach flagging to both wire strands midway between each post. Use flagging at least 18 in. long. Tie flagging to the wire using a square knot.

8. **Sandbags for Erosion Control.** Construct a berm or dam of sandbags that will intercept sediment-laden storm water runoff from disturbed areas, create a retention pond, detain sediment, and release water in sheet flow. Fill each bag with sand so that at least the top 6 in. of the bag is unfilled to allow for proper tying of the open end. Place the sandbags with their tied ends in the same direction. Offset subsequent rows of sandbags ½ the length of the preceding row. Place a single layer of sandbags downstream as a secondary debris trap. Place additional sandbags as necessary or as directed for supplementary support to berms or dams of sandbags or earth.

9. **Temporary Sediment-Control Fence.** Provide temporary sediment-control fence near the downstream perimeter of a disturbed area to intercept sediment from sheet flow. Incorporate the fence into erosion-control measures used to control sediment in areas of higher flow. Install the fence as shown on the plans, as specified in this Section, or as directed.

a. **Installation of Posts.** Embed posts at least 18 in. deep, or adequately anchor, if in rock, with a spacing of 6 to 8 ft. and install on a slight angle toward the run-off source.

b. **Fabric Anchoring.** Dig trenches along the uphill side of the fence to anchor 6 to 8 in. of fabric. Provide a minimum trench cross-section of 6 x 6 in. Place the fabric against the side of the trench and align approximately 2 in of fabric along the bottom in the upstream direction. Backfill the trench, then hand-tamp.

c. **Fabric and Net Reinforcement Attachment.** Unless otherwise shown under the plans, attach the reinforcement to wooden posts with staples, or to steel posts with T-clips, in at least 4 places equally spaced. Sewn vertical pockets may be used to attach reinforcement to end posts. Fasten the fabric to the top strand of reinforcement by hog rings or cord every 15 in. or less.

d. **Fabric and Net Splices.** Locate splices at a fence post with a minimum lap of 6 in. attached in at least 6 places equally spaced, unless otherwise shown under the plans. Do not locate splices in concentrated flow areas. Requirements for installation of used temporary sediment control fence include the following:

- fabric with minimal or no visible signs of biodegradation (weak fibers),
- fabric without excessive patching (more than 1 patch every 15 to 20 ft.),
- posts without bends, and
- backing without holes.

10. Curb Inlet Gravel Filter.

a. **Installation.** Install the curb inlet gravel filters in the following manner:

(1) Place the 2” x 4” treated lumber in front of and parallel with the opening of the inlet.

(2) Place the Concrete Masonry Units (CMUs) around the inlet, to be protected, in front of the 2” x 4” lumber, with the openings of the CMUs facing the inlet.

(3) Surround the CMUs with gravel bags, making certain that there are no gaps are evident between the gravel bags.

b. **Sediment Control.** When the accumulated sediment deposit reaches a depth of approximately 6 inches, it shall be removed and disposed of at approved sites in a manner that will not contribute to additional siltation. If the structure ceases to function as intended, the Engineer may direct that the Filter bag be replaced. Such replacement will not be measured for payment. Torn or punctured bags shall be replaced with a new Filter bag.

540.5. MEASUREMENT: If the Contractor is required to install temporary erosion, sediment and water pollution control measures due to his negligence, carelessness, lack of maintenance, or failure to install permanent controls as a part of the work as scheduled, and measures are ordered in writing by the Engineer, such work shall not be measured for payment, but shall be performed at the Contractor's expense.