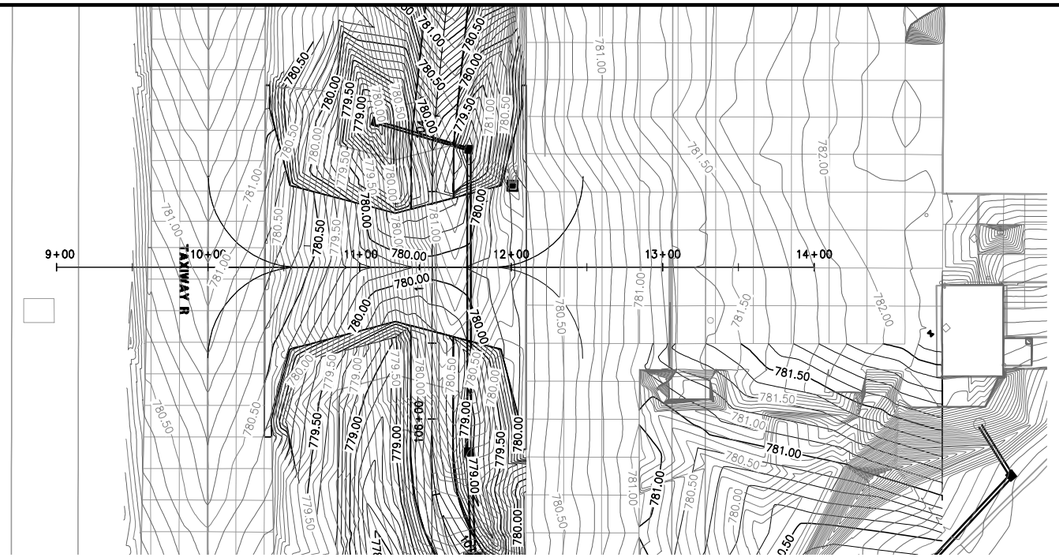

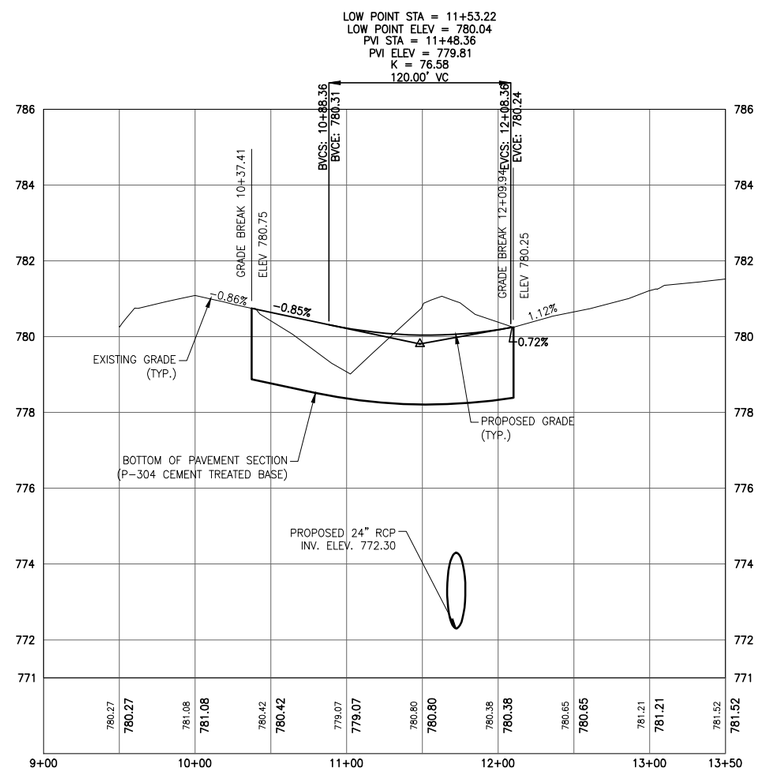

TAXIWAY CONNECTOR PROFILE

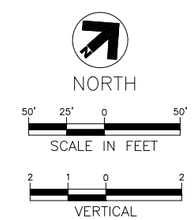

RS&H

RS&H, Inc.
13750 SAN PEDRO AVE, SUITE 300
SAN ANTONIO, TX 78232
(210) 224-2800 FAX (210) 545-3103
WWW.RSANDH.COM
REGISTERED FIRM NO: F-3401

SAN ANTONIO INTERNATIONAL AIRPORT
SAN ANTONIO, TEXAS

GA FIS TAXIWAY AND APRON IMPROVEMENTS

STATE OF TEXAS
JOHN E. HIPPCHEN
113667
LICENSED
PROFESSIONAL ENGINEER
7/25/14

REVISIONS

DATE ISSUED: JULY 2014
REVIEWED BY: NSG
DRAWN BY: AL
DESIGNED BY: JEH

RS&H PROJECT NUMBER
223-3267-004

© 2014 RS&H, INC.

SHEET TITLE

TAXIWAY CONNECTOR PROFILE

SHEET NUMBER

C302

ISSUED FOR BID
NOT FOR CONSTRUCTION

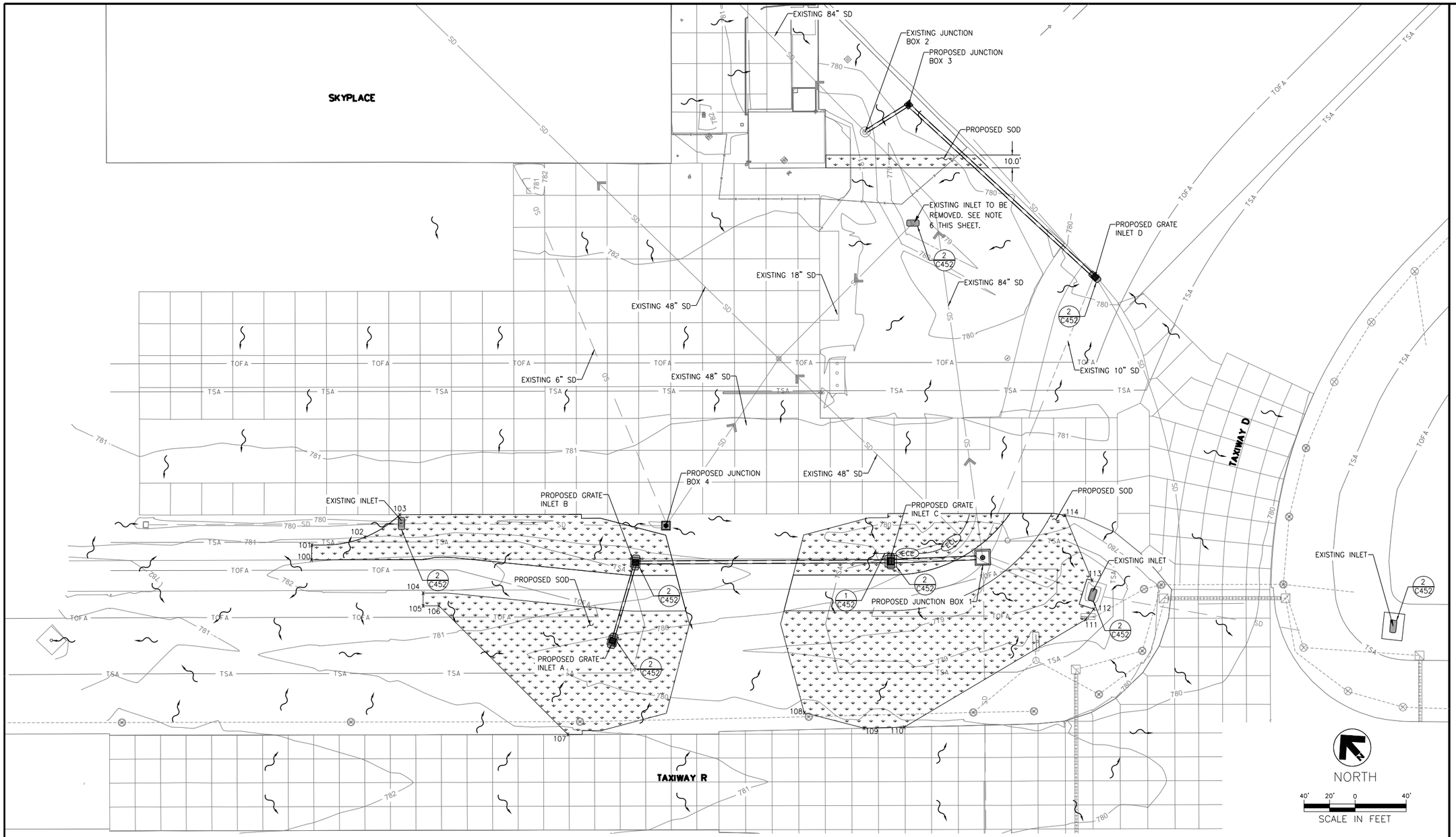

GENERAL NOTES:

1. EXISTING STORM DRAIN LINES WERE DERIVED FROM EXISTING AS-BUILTS AND ARE ONLY APPROXIMATE. CONTRACTOR TO FIELD VERIFY ACTUAL LOCATIONS.
2. EXISTING INLET TO BE REMOVED OR REPLACED SHALL BE PROTECTED AS NECESSARY DURING CONSTRUCTION AND PRIOR TO THEIR REMOVAL AND/OR REPLACEMENT.
3. PROPOSED SOD TO BE INSTALLED AFTER COMPLETION OF TAXIWAY CONSTRUCTION. SOD TO BE PLACED AROUND THE PROPOSED PERIMETER ROAD AND TAXIWAY AS SHOWN ON PLANS.
4. FLOW ARROWS SHOWN ARE FOR EXISTING FLOW PATTERNS. CONTRACTOR TO REFER TO SHEET C500 FOR ULTIMATE DRAINAGE FLOW ARROWS.
5. SURVEY WAS PROVIDED BY VICKREY & ASSOCIATES, INC. (210) 349-3271.
6. SEE DEMOLITION PLAN SHEET C100 FOR LIMITS OF STORM DRAIN DEMOLITION.
7. SEE SHEET C005 AND C007 FOR PROPOSED LOCATIONS OF CONSTRUCTION ENTRANCES/EXITS.

PT NO.	EASTING	NORTHING
100	2137793.56	13744871.58
101	2137801.46	13744880.17
102	2137836.78	13744857.22
103	2137868.88	13744852.29
104	2137841.78	13744794.24
105	2137835.18	13744786.73
106	2137844.52	13744778.51
107	2137853.44	13744636.06
108	2138003.43	13744526.22
109	2138030.47	13744486.17
110	2138054.53	13744434.89
111	2138216.98	13744434.88
112	2138227.14	13744436.84
113	2138240.94	13744454.54
114	2138258.92	13744506.76

LEGEND

- SD → STORM DRAIN FROM AS-BUILTS
- SD STORM DRAIN FROM SURVEY
- EXISTING FLOW ARROWS
- ECL NEW EROSION CONTROL LOGS
- NEW CONSTRUCTION EXIT
- NEW SOD
- INLET PROTECTION
- 1 C452 DETAIL NUMBER / DETAIL SHEET NUMBER

RS&H

Reynolds, Smith and Hills, Inc.
13750 SAN PEDRO AVE, SUITE 300
SAN ANTONIO, TX 78232
(210) 224-2800 FAX (210) 545-3103
WWW.RSANDH.COM
REGISTERED FIRM NO: F-3401

SAN ANTONIO INTERNATIONAL AIRPORT
SAN ANTONIO, TEXAS

GA FIS TAXIWAY AND APRON IMPROVEMENTS

STATE OF TEXAS
AYDA S. GONZALEZ
98594
LICENSED PROFESSIONAL ENGINEER
7/25/14

REVISIONS

DATE ISSUED: JUNE 2014
REVIEWED BY: ASG
DRAWN BY: MO
DESIGNED BY: AR

RS&H PROJECT NUMBER
223-3267-004

© 2014 REYNOLDS, SMITH AND HILLS INC.

SHEET TITLE

STORM WATER POLLUTION PREVENTION PLAN

SHEET NUMBER

C450

ISSUED FOR BID
NOT FOR CONSTRUCTION

STORM WATER POLLUTION PREVENTION PLAN

CONTRACTOR'S REQUIREMENTS

SITE DESCRIPTION

PROJECT NAME AND LOCATION: SAN ANTONIO INTERNATIONAL AIRPORT
SAN ANTONIO, TEXAS

OWNER NAME AND ADDRESS:

CITY OF SAN ANTONIO
9800 AIRPORT BLVD
SAN ANTONIO, TX 78216

DESCRIPTION:
FEDERAL INSPECTION STATION APRON AND CONNECTOR TAXIWAY IMPROVEMENTS

SOIL DISTURBING ACTIVITIES WILL INCLUDE:
CLEARING AND GRUBBING; EARTHWORK, GRADING;
STORM SEWER, UTILITIES, AND PREPARATION FOR
FINAL PLANTING AND SEEDING.

RUNOFF COEFFICIENT:
1. PRE-CONSTRUCTION = 0.63
2. POST-CONSTRUCTION = 0.75

SOILS:
THE MATERIALS ECOUNTERED IN THE TEST BORINGS CONSIST PRIMARILY OF CLAYEY ALLUVIAL SOILS WITH SCATTERED UNITS OF CALCAREOUS CLAYS, SANDY CLAYS, CLAYEY SANDS AND CLAYEY GRAVELS MOST OF WHICH ARE IN STIFF TO VERY HARD CONDITION.

SITE MAPS:
* SEE ATTACHED PLANS FOR PRE & POST DEVELOPMENT GRADES, AREAS OF SOILS, DISTURBANCE, LOCATION OF SURFACE WATERS, WETLANDS, PROTECTED AREAS, MAJOR STRUCTURAL AND NONSTRUCTURAL CONTROLS AND STORM WATER DISCHARGE POINTS.
* SEE ATTACHED GRADING AND EROSION CONTROL PLAN FOR LOCATION OF TEMPORARY STABILIZATION PRACTICES
* SEE GENERAL NOTES FOR REQUIRMENTS FOR TEMPORARY AND PERMANENT STABILIZATION.

SITE AREA:
1. TOTAL AREA OF SITE = 8.64 ACRES
2. TOTAL AREA TO BE DISTURBED (BASE BID)= 2.88 ACRES

NAME OF RECEIVING WATERS: SALADO CREEK

CONTROLS

THIS PLAN UTILIZES BEST MANAGEMENT PRACTICES TO CONTROL EROSION AND TURBIDITY CAUSED BY STORM WATER RUN OFF. AN EROSION CONTROL PLAN HAS BEEN PREPARED TO INSTRUCT THE CONTRACTOR ON PLACEMENT OF THESE CONTROLS. IT IS THE CONTRACTORS RESPONSIBILITY TO INSTALL AND MAINTAIN THE CONTROLS PER PLAN AS WELL AS ENSURING THE PLAN IS PROVIDING THE PROPER PROTECTION AS REQUIRED BY FEDERAL, STATE AND LOCAL LAWS. REFER TO "CONTRACTORS RESPONSIBILITY" FOR A VERBAL DESCRIPTION OF THE CONTROLS THAT MAY BE IMPLEMENTED.

STORM WATER MANAGEMENT
STORM WATER DRAINAGE WILL BE PROVIDED BY (DESRIPTION:) EROSION CONTROL LOGS, SEEDING & HYDROMULCH, STORM INLETS, AND STORM SEWERS.

TIMING OF CONTROLS/MEASURES

REFER TO " CONTRACTORS RESPONSIBILITY" FOR THE TIMING OF CONTROL/MEASURES.

GENERAL

THE CONTRACTOR SHALL AT A MINIMUM IMPLEMENT THE PERTINENT CONTRACTOR'S REQUIREMENTS OUTLINED BELOW AND THOSE MEASURES SHOWN ON THE EROSION CONTROL PLAN. IN ADDITION THE CONTRACTOR SHALL UNDERTAKE ADDITIONAL MEASURES REQUIRED TO BE IN COMPLIANCE WITH APPLICABLE PERMIT CONDITIONS AND STATE WATER QUALITY STANDARDS.

SEQUENCE OF MAJOR ACTIVITIES:

THE ORDER OF ACTIVITIES WILL BE AS FOLLOWS:

1. INSTALL STABILIZED CONSTRUCTION ENTRANCE
2. INSTALL INLET PROTECTION FOR EXISTING INLETS AND EROSION CONTROL LOGS AS REQUIRED
3. CLEAR AND GRUB FOR SWALES/DIKES
4. STABILIZE DENUDED AREAS AND STOCKPILE AS SOON AS PRACTICABLE
5. CONTINUE CLEARING AND GRUBBING
6. STOCK PILE TOP SOIL AS REQUIRED
7. CONSTRUCT PROPOSED TAXIWAY AND APRON PER THE PROJECT PHASING.
8. STABILIZE DENUDED AREAS AND STOCKPILE AS SOON AS PRACTICABLE
9. INSTALL PERMANENT SEEDING/SOD AND PLANTING
10. WHEN ALL CONSTRUCTION ACTIVITY IS COMPLETE AND THE SITE IS STABILIZED, REMOVE ANY TEMPORARY DIVERSION SWALES/DIKES AND RESEED/SOD AS REQUIRED.

TIMING OF CONTROLS/MEASURES

AS INDICATED IN THE SEQUENCE OF MAJOR ACTIVITIES, THE INLET PROTECTIONS, EROSION CONTROL LOGS AND STABILIZED CONSTRUCTION ENTRANCE WILL BE CONSTRUCTED PRIOR TO CLEARING OR GRADING OF ANY OTHER PORTIONS OF THE SITE. STABILIZATION MEASURES SHALL BE INITIATED AS SOON AS PRACTICAL IN PORTIONS OF THE SITE WHERE CONSTRUCTION ACTIVITIES HAVE TEMPORARILY OR PERMANENTLY CEASED. ONCE CONSTRUCTION ACTIVITY CEASES PERMANENTLY IN AN AREA, THAT AREA WILL BE STABILIZED PERMANENTLY IN ACCORDANCE WITH THE PLANS.

CONTROLS

IT IS THE CONTRACTORS RESPONSIBILITY TO IMPLEMENT THE EROSION CONTROLS AS SHOWN ON THE EROSION CONTROL PLAN. IT IS ALSO THE CONTRACTORS RESPONSIBILITY TO ENSURE THESE CONTROLS ARE PROPERLY INSTALLED , MAINTAINED AND FUNCTIONING PROPERLY TO PREVENT TURBID OR POLLUTED WATER FROM LEAVING THE PROJECT SITE. THE CONTRACTOR WILL ADJUST THE EROSION CONTROLS SHOWN ON THE EROSION CONTROL PLAN AND ADD ADDITIONAL CONTROL MEASURES, AS REQUIRED,TO ENSURE THE SITE MEETS ALL FEDERAL, STATE AND LOCAL EROSION AND TURBIDITY CONTROL REQUIREMENTS. THE FOLLOWING BEST MANAGEMENT PRACTICES WILL BE IMPLEMENTED BY THE CONTRACTOR AS REQUIRED BY THE EROSION CONTROL PLAN AND AS REQUIRED TO MEET THE EROSION REQUIREMENTS IMPOSED ON THE PROJECT SITE BY THE REGULATORY AGENCIES.

EROSION AND SEDIMENT CONTROLS
STABILIZATION PRACTICES

1. STOCKPILING MATERIAL: NO EXCAVATED MATERIAL SHALL BE STOCKPILED IN SUCH A MANNER AS TO DIRECT RUNOFF DIRECTLY OFF THE PROJECT SITE INTO ANY ADJACENT WATER BODY OR STORM WATER COLLECTION FACILITY.
2. EXPOSED AREA LIMITATION: THE SURFACE AREA OF OPEN, RAW ERODIBLE SOIL EXPOSED BY CLEARING AND GRUBBING OPERATIONS OR EXCAVATION AND FILLING OPERATIONS SHALL NOT EXCEED 10 ACRES. THIS REQUIREMENT MAY BE WAIVED FOR LARGE PROJECTS WITH AN EROSION CONTROL PLAN WHICH DEMONSTRATES THAT OPENING OF ADDITIONAL AREAS WILL NOT SIGNIFICANTLY AFFECT OFF-SITE DEPOSIT OF SEDIMENTS.
3. TEMPORARY SEEDING: AREAS OPENED BY CONSTRUCTION OPERATIONS AND THAT ARE NOT ANTICIPATED TO BE RE-EXCAVATED OR DRESSED AND RECEIVE FINAL GRASSING TREATMENT WITHIN 30 DAYS SHALL BE SEEDED WITH A QUICK GROWING GRASS SPECIES WHICH WILL PROVIDE AN EARLY COVER DURING THE SEASON IN WHICH IT IS PLANTED AND WILL NOT LATER COMPETE WITH THE PERMANENT GRASSING.
4. TEMPORARY SEEDING AND MULCHING: SLOPES STEEPER THAN 6:1 THAT FALL WITHIN THE CATEGORY ESTABLISHED IN PARAGRAPH B ABOVE SHALL ADDITIONALLY RECEIVE MULCHING OF APPROXIMATELY 2 INCHES LOOSE MEASURE OF MULCH MATERIAL CUT INTO THE SOIL OF THE SEEDED AREA ADEQUATE TO PREVENT MOVEMENT OF SEED AND MULCH.
5. MAINTENANCE: ALL FEATURES OF THE PROJECT DESIGNED AND CONSTRUCTED TO PREVENT EROSION AND SEDIMENT SHALL BE MAINTAINED DURING THE LIFE OF THE CONSTRUCTION SO AS TO FUNCTION AS THEY WERE ORIGINALLY DESIGNED AND CONSTRUCTED. IF A REPAIR IS NECESSARY, IT WILL BE DONE AT THE EARLIEST DATE POSSIBLE, BUT NOT LATER THAN 7 CALENDAR DAYS AFTER THE SURROUNDING EXPOSED GROUND HAS DRIED SUFFICIENTLY TO PREVENT DAMAGE FROM HEAVY EQUIPMENT.
6. PERMANENT EROSION CONTROL: THE EROSION CONTROL FACILITIES OF THE PROJECT SHOULD BE DESIGNED TO MINIMIZE THE IMPACT ON THE OFFSITE FACILITIES.
7. PERMANENT SEEDING: ALL AREAS WHICH HAVE BEEN DISTURBED BY CONSTRUCTION WILL, AS A MINIMUM, BE SEEDED. THE SEEDING MIX MUST PROVIDE BOTH LONG-TERM VEGETATION AND RAPID GROWTH SEASONAL VEGETATION. SLOPES STEEPER THAN 4:1 SHALL BE SEEDED AND MULCHED OR SODDED.

STRUCTURAL PRACTICES

____ SILT FENCES
____ HAY BALES
____ ROCK BERMS
____ DIVERSION, INTERCEPTOR, OR PERIMETER DIKES
____ DIVERSION, INTERCEPTOR, OR PERIMETER SWALES
____ DIVERSION DIKE AND SWALE COMBINATIONS
____ PIPE SLOPE DRAINS
____ PAVED FLUMES
_X_ ROCK BEDDING AT CONSTRUCTION EXIT
____ TIMBER MATTING AT CONSTRUCTION EXIT
_X_ EROSION CONTROL LOGS
____ SEDIMENT TRAPS
____ SEDIMENT BASINS
_X_ STORM INLET SEDIMENT TRAP
____ STONE OUTLET STRUCTURES
____ CURBS AND GUTTERS
_X_ STORM SEWERS
____ VELOCITY CONTROL DEVICES

OTHER CONTROLS

WASTE DISPOSAL

WASTE MATERIALS

ALL WASTE MATERIALS EXCEPT LAND CLEARING DEBRIS SHALL BE COLLECTED AND STORED IN A SECURELY LIDDED METAL DUMPSTER. THE DUMPSTER WILL MEET ALL LOCAL AND STATE SOLID WASTE MANAGEMENT REGULATIONS. THE DUMPSTER WILL BE EMPTIED AS NEEDED AND THE TRASH WILL BE HAULED TO A STATE APPROVED LANDFILL. ALL PERSONNEL WILL BE INSTRUCTED REGARDING THE CORRECT PROCEDURE FOR WASTE DISPOSAL. NOTICES STATING THESE PRACTICES WILL BE POSTED AT THE CONSTRUCTION SITE BY THE CONSTRUCTION SUPERINTENDENT, THE INDIVIDUAL WHO MANAGES THE DAY-TO-DAY SITE OPERATIONS, WILL BE RESPONSIBLE FOR SEEING THAT THESE PROCEDURES ARE FOLLOWED.

HAZARDOUS WASTE

ALL HAZARDOUS WASTE MATERIALS WILL BE DISPOSED OF IN THE MANNER SPECIFIED BY LOCAL OR STATE REGULATION OR BY THE MANUFACTURER. SITE PERSONNEL WILL BE INSTRUCTED IN THESE PRACTICES AND THE SITE SUPERINTENDENT, THE INDIVIDUAL WHO MANAGES DAY-TO-DAY SITE OPERATIONS,WILL BE RESPONSIBLE FOR SEEING THAT THESE PRACTICES ARE FOLLOWED.

SANITARY WASTE

ALL SANITARY WASTE WILL BE COLLECTED FROM THE PORTABLE UNITS AS NEEDED TO PREVENT POSSIBLE SPILLAGE. THE WASTE WILL BE COLLECTED AND DEPOSED OF IN ACCORDANCE WITH STATE AND LOCAL WASTE DISPOSAL REGULATIONS FOR SANITARY SEWER OR SEPTIC SYSTEMS.

OFFSITE VEHICLE TRACKING

A STABILIZED CONSTRUCTION ENTRANCE WILL BE PROVIDED TO HELP REDUCE VEHICLE TRACKING OF SEDIMENTS. THE PAVED STREET ADJACENT TO THE SITE ENTRANCE WILL BE SWEPT DAILY TO REMOVE ANY EXCESS MUD, DIRT OR ROCK TRACKED FROM THE SITE. DUMP TRUCKS HAULING MATERIAL FROM THE CONSTRUCTION SITE WILL BE COVERED WITH A TARPAULIN.

_X_ HAUL ROADS DAMPENED FOR DUST CONTROL

INVENTORY FOR POLLUTION PREVENTION PLAN

THE MATERIALS OR SUBSTANCES LISTED BELOW ARE EXPECTED TO BE PRESENT ONSITE DURING CONSTRUCTION:

[X] Concrete	[X] Fertilizers	[ ] Wood
[X] Asphalt	[X] Petroleum Based Products	[ ] Masonry Blocks
[ ] Tar	[ ] Cleaning Solvents	[ ] Roofing Materials
[ ] Detergents	[X] Paints	[ ] Metal Studs
[ ] _____	[ ] _____	[ ] _____

SPILL PREVENTION

MATERIAL MANAGEMENT PRACTICES

THE FOLLOWING ARE THE MATERIAL MANAGEMENT PRACTICES THAT WILL BE USED TO REDUCE THE RISK OF SPILLS OR OTHER ACCIDENTAL EXPOSURE OF MATERIALS AND SUBSTANCES TO STORM WATER RUNOFF.

GOOD HOUSEKEEPING

THE FOLLOWING GOOD HOUSEKEEPING PRACTICES WILL BE FOLLOWED ONSITE DURING THE CONSTRUCTION PROJECT.

* AN EFFORT WILL BE MADE TO STORE ONLY ENOUGH PRODUCT REQUIRED TO DO THE JOB.
* ALL MATERIALS STORED ONSITE WILL BE STORED IN A NEAT, ORDERLY MANNER IN THEIR APPROPRIATE CONTAINERS AND, IF POSSIBLE, UNDER A ROOF OR OTHER ENCLOSURE.
* PRODUCTS WILL BE KEPT IN THEIR ORIGINAL CONTAINERS WITH THE ORIGINAL MANUFACTURER'S LABEL.
* SUBSTANCES WILL NOT BE MIXED WITH ONE ANOTHER UNLESS RECOMMENDED BY THE MANUFACTURER.
* WHEN EVER POSSIBLE, ALL OF A PRODUCT WILL BE USED UP BEFORE DISPOSING OF THE CONTAINER.
* MANUFACTURER'S RECOMMENDATIONS FOR PROPER USE AND DISPOSAL WILL BE FOLLOWED.
* THE SITE SUPERINTENDENT WILL INSPECT DAILY TO ENSURE MATERIALS ONSITE RECEIVE PROPER USE AND DISPOSAL.

HAZARDOUS PRODUCTS

THESE PRACTICES ARE USED TO REDUCE THE RISKS ASSOCIATED WITH HAZARDOUS MATERIALS.

* PRODUCTS WILL BE KEPT IN ORIGINAL CONTAINERS UNLESS THEY ARE NOT RESEALABLE.
* ORIGINAL LABELS AND MATERIAL SAFETY DATA WILL BE RETAINED; THEY CONTAIN IMPORTANT PRODUCT INFORMATION.
* IF SURPLUS PRODUCT MUST BE DISPOSED OF, MANUFACTURER'S OR LOCAL AND STATE RECOMMENDED METHODS FOR PROPER DISPOSAL WILL BE FOLLOWED.

PRODUCT SPECIFIC PRACTICES
THE FOLLOWING PRODUCT SPECIFIC PRACTICES WILL BE FOLLOWED ONSITE:

PETROLEUM PRODUCTS
ALL ONSITE VEHICLES WILL BE MONITORED FOR LEAKS AND RECEIVE REGULAR PREVENTIVE MAINTENANCE TO REDUCE THE CHANCE OF LEAKAGE. PETROLEUM PRODUCTS WILL BE STORED IN TIGHTLY SEALED CONTAINERS WHICH ARE CLEARLY LABELED. ANY ASPHALT SUBSTANCES USED ONSITE WILL BE APPLIED ACCORDING TO THE MANUFACTURER'S RECOMMENDATIONS.

FERTILIZERS
FERTILIZERS USED WILL BE APPLIED ONLY IN THE MINIMUM AMOUNTS RECOMMENDED BY THE MANUFACTURER. ONCE APPLIED, FERTILIZER WILL BE WORKED INTO THE SOIL TO LIMIT EXPOSURE TO STORM WATER. STORAGE WILL BE IN A COVERED AREA. THE CONTENTS OF ANY PARTIALLY USED BAGS OF FERTILIZER WILL BE TRANSFERRED TO A SEALABLE PLASTIC BIN TO AVOID SPILLS.

PAINTS
ALL CONTAINERS WILL BE TIGHTLY SEALED AND STORED WHEN NOT REQUIRED FOR USE. EXCESS PAINT WILL NOT BE DISCHARGED TO THE STORM SEWER SYSTEM BUT WILL BE PROPERLY DISPOSED OF ACCORDING TO MANUFACTURERS' INSTRUCTIONS OR STATE AND LOCAL REGULATIONS.

CONCRETE TRUCKS
CONCRETE TRUCKS WILL NOT BE ALLOWED TO WASH OUT OR DISCHARGE SURPLUS CONCRETE OR DRUM WASH WATER ON THE SITE.

SPILL CONTROL PRACTICES

IN ADDITION TO THE GOOD HOUSEKEEPING AND MATERIAL MANAGEMENT PRACTICES DISCUSSED IN THE PREVIOUS SECTIONS OF THIS PLAN, THE FOLLOWING PRACTICES WILL BE FOLLOWED FOR SPILL PREVENTION AND CLEANUP:

MANUFACTURERS' RECOMMENDED METHODS FOR SPILL CLEANUP WILL BE CLEARLY POSTED ON SITE AND SITE PERSONNEL WILL BE MADE AWARE OF THE PROCEDURES AND THE LOCATION OF THE INFORMATION AND CLEANUP SUPPLIES.

MATERIALS AND EQUIPMENT NECESSARY FOR SPILL CLEANUP WILL BE KEPT IN THE MATERIAL STORAGE AREA ONSITE. EQUIPMENT AND MATERIALS WILL INCLUDE BUT NOT BE LIMITED TO BROOMS, DUST PANS, MOPS, RAGS, GLOVES, GOGGLES, LIQUID ABSORBENT (i.e. KITTY LITTER OR EQUAL), SAND, SAWDUST, AND PLASTIC AND METAL TRASH CONTAINERS SPECIFICALLY FOR THIS PURPOSE.

ALL SPILLS WILL BE CLEANED UP IMMEDIATELY AFTER DISCOVERY.

THE SPILL AREA WILL BE KEPT WELL VENTILATED AND PERSONNEL WILL WEAR APPROPRIATE PROTECTIVE CLOTHING TO PREVENT INJURY FROM CONTACT WITH A HAZARDOUS SUBSTANCE.

SPILL OF TOXIC OR HAZARDOUS MATERIAL WILL BE REPORTED TO THE APPROPRIATE STATE OR LOCAL GOVERNMENT AGENCY, REGARDLESS OF THE SIZE OF THE SPILL.

THE SPILL PREVENTION PLAN WILL BE ADJUSTED TO INCLUDE MEASURES TO PREVENT THIS TYPE OF SPILL FROM REOCCURRING AND HOW TO CLEAN UP THE SPILL IF THERE IS ANOTHER ONE. A DESCRIPTION OF THE SPILL, WHAT CAUSED IT, AND THE CLEANUP MEASURES WILL ALSO BE INCLUDED.

THE SITE SUPERINTENDENT RESPONSIBLE FOR THE DAY-TO-DAY SITE OPERATIONS, WILL BE THE SPILL PREVENTION AND CLEANUP COORDINATOR. HE/SHE WILL DESIGNATE AT LEAST ONE OTHER SITE PERSONNEL WHO WILL RECEIVE SPILL PREVENTION AND CLEANUP TRAINING. THESE INDIVIDUALS WILL EACH BECOME RESPONSIBLE FOR A PARTICULAR PHASE OF PREVENTION AND CLEANUP. THE NAMES OF RESPONSIBLE SPILL PERSONNEL WILL BE POSTED IN THE MATERIAL STORAGE AREA AND IF APPLICABLE, IN THE OFFICE TRAILER ONSITE.

MAINTENANCE/INSPECTION PROCEDURES

EROSION AND SEDIMENT CONTROL INSPECTION AND MAINTENANCE PRACTICES

THE FOLLOWING ARE INSPECTION AND MAINTENANCE PRACTICES THAT WILL BE USED TO MAINTAIN EROSION AND SEDIMENT CONTROLS.

* NO MORE THAN 10 ACRES OF THE SITE WILL BE DENUDED AT ONE TIME WITHOUT WRITTEN PERMISSION FROM THE ENGINEER.
* ALL CONTROL MEASURES WILL BE INSPECTED BY THE SUPERINTENDENT, THE PERSON RESPONSIBLE FOR THE DAY TO DAY SITE OPERATION OR SOMEONE APPOINTED BY THE SUPERINTENDENT, AT LEAST ONCE EVERY FOURTEEN (14) CALENDAR DAYS AND WITHIN TWENTY FOUR (24) HOURS OF THE END OF A STORM EVENT OF 0.5 INCHES OR GREATER.
* BUILT UP SEDIMENT WILL BE REMOVED FROM SILT FENCE WHEN IT HAS REACHED ONE-THIRD THE HEIGHT OF THE FENCE.
* SILT FENCE WILL BE INSPECTED FOR DEPTH OF SEDIMENT, TEARS, TO SEE IF THE FABRIC IS SECURELY ATTACHED TO THE FENCE POSTS, AND TO SEE THAT THE FENCE POSTS ARE FIRMLY IN THE GROUND.
* TEMPORARY AND PERMANENT SEEDING AND PLANTING WILL BE INSPECTED FOR BARE SPOTS, WASHOUTS, AND HEALTHY GROWTH.
* A MAINTENANCE INSPECTION REPORT WILL BE MADE AFTER EACH INSPECTION.
THE REPORTS WILL BE KEPT ON SITE DURING CONSTRUCTION AND AVAILABLE UPON REQUEST TO THE OWNER, ENGINEER OR ANY FEDERAL, STATE OR LOCAL AGENCY APPROVING SEDIMENT AND AND EROSION PLANS, OR STORM WATER MANAGEMENT PLANS.
THE REPORTS SHALL BE MADE AND RETAINED AS PART OF THE STORM WATER POLLUTION PREVENTION PLAN FOR AT LEAST THREE YEARS FROM THE DATE THAT THE SITE IS FINALLY STABILIZED AND THE NOTICE OF TERMINATION IS SUBMITTED THE REPORTS SHALL IDENTIFY ANY INCIDENTS OF NON-COMPLIANCE.
* THE SITE SUPERINTENDENT WILL SELECT UP TO THREE INDIVIDUALS WHO WILL BE RESPONSIBLE FOR INSPECTIONS, MAINTENANCE AND REPAIR ACTIVITIES, AND FILLING OUT THE INSPECTION AND MAINTENANCE REPORT.
* PERSONNEL SELECTED FOR INSPECTION AND MAINTENANCE RESPONSIBILITIES WILL RECEIVE TRAINING FROM THE SITE SUPERINTENDENT. THEY WILL BE TRAINED IN ALL THE INSPECTION AND MAINTENANCE PRACTICES NECESSARY FOR KEEPING THE EROSION AND SEDIMENT CONTROLS USED ONSITE IN GOOD WORKING ORDER.

NON-STORM WATER DISCHARGES

IT IS EXPECTED THAT THE FOLLOWING NON-STORM WATER DISCHARGES WILL OCCUR FROM THE SITE DURING THE CONSTRUCTION PERIOD:

* WATER FROM WATER LINE FLUSHING
* PAVEMENT WASH WATERS (WHERE NO SPILLS OR LEAKS OF TOXIC OR HAZARDOUS MATERIALS HAVE OCCURRED).
* UNCONTAMINATED GROUNDWATER (FROM DEWATERING EXCAVATION).

ALL NON-STORM WATER DISCHARGES WILL BE DIRECTED TO THE SEDIMENT BASIN PRIOR TO DISCHARGE.

CONTRACTOR'S CERTIFICATION
I CERTIFY UNDER PENALTY OF LAW THAT I UNDERSTAND THE TERMS AND CONDITIONS OF THE GENERAL NATIONAL POLLUTANT DISCHARGE ELIMINATION SYSTEM (NPDES) PERMIT THAT AUTHORIZES THE STORM WATER DISCHARGES ASSOCIATED WITH INDUSTRIAL ACTIVITY FROM THE CONSTRUCTION SITE IDENTIFIED AS PART OF THIS CERTIFICATION.

NOTE:
SWPPP PROVIDED IN PLANS FOR REFERENCE ONLY. CONTRACTOR IS RESPONSIBLE FOR DEVELOPING SWPPP. SEE SPECIFICATION P-156 FOR MORE INFORMATION.

RS&H

RS&H, Inc.
13750 SAN PEDRO AVE, SUITE 300
SAN ANTONIO, TX 78232
(210) 224-2800 FAX (210) 545-3103
WWW.RSANDH.COM
REGISTERED FIRM NO: F-3401

SAN ANTONIO INTERNATIONAL AIRPORT
SAN ANTONIO, TEXAS

GA FIS TAXIWAY AND APRON IMPROVEMENTS

STATE OF TEXAS
AYDA S. GONZALEZ
96594
LICENSED PROFESSIONAL ENGINEER
7/25/14

REVISIONS

DATE ISSUED: JULY 2014
REVIEWED BY:
DRAWN BY:
DESIGNED BY:

RS&H PROJECT NUMBER
223-3267-004

© 2014 RS&H, INC.

SHEET TITLE

STORM WATER POLLUTION PREVENTION PLAN NOTES

SHEET NUMBER

C451

ISSUED FOR BID
NOT FOR CONSTRUCTION

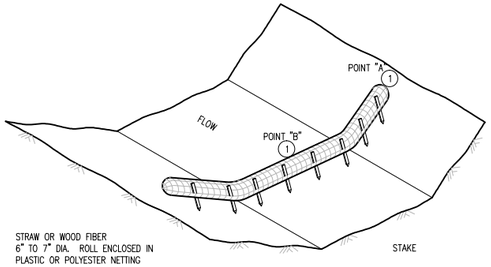

TYPE 2: BIOROLL DITCH CHECK

USE ON ROUGH GRADED AREAS

NOTES:

SEE SPECS. FAA 10F P-156

SPACING BETWEEN EACH DITCH CHECK SHOULD BE DETERMINED FROM SPACING FORMULA:

$$\text{SPACING OF DITCH CHECKS (FT.)} = \frac{\text{DITCH CHECK HEIGHT (FT)}}{\text{\% CHANNEL SLOPE}} \times 100$$

(1) POINT "A" MUST BE A MINIMUM OF 6 INCHES HIGHER THAN POINT "B" TO ENSURE THAT WATER FLOWS OVER THE DIKE AND NOT AROUND THE ENDS.

(2) STRAW OR WOOD FIBER WITH GEOTEXTILE FABRIC LINER.

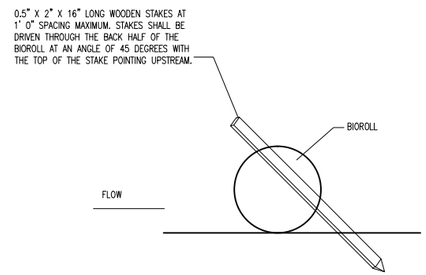

BIOROLL STAKING DETAIL

1/C452 BIOROLL DITCH CHECK

SCALE: N.T.S.

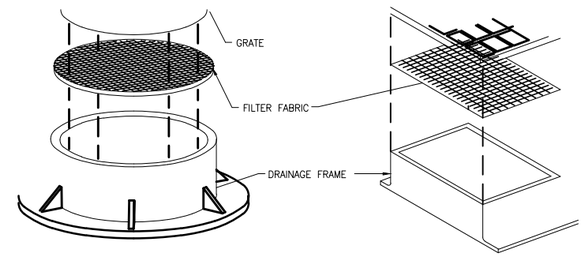

2/C452 GRATE INLET PROTECTION

SCALE: N.T.S.

NOTES

1. FILTER FABRIC TO BE PLACED IN ALL INLETS, MANHOLES, TRENCH DRAINS AND CATCH BASINS.
2. FABRIC SHALL BE IN CONFORMANCE WITH MATERIALS SPECIFIED FOR FABRIC FENCE.
3. FABRIC SHALL OVERLAY FRAME BY 2" (MIN.).
4. CONTRACTOR SHALL CLEAR DEBRIS AND SILT AS REQUIRED FROM FABRIC TO MAINTAIN DRAINAGE THROUGH THE STRUCTURE.
5. FABRIC SHALL REMAIN IN PLACE UNTIL PAVEMENT CONSTRUCTION IS COMPLETE.

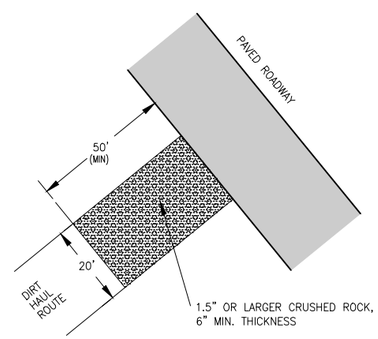

3/C452 CONSTRUCTION ENTRANCE

SCALE: N.T.S.

NOTES

1. ACCESS TO THE SITE SHALL ONLY BE ALONG DESIGNATED HAUL ROUTE.
2. CONTRACTOR IS RESPONSIBLE FOR MAINTAINING HAUL ROUTE AND RETURNING SITE TO ORIGINAL CONDITION FOLLOWING COMPLETION OF PROJECT.
3. ALL TURF AREAS AFFECTED BY CONSTRUCTION THAT ARE NOT PAVED ARE TO BE TOPSOILED, SEEDED, AND MULCHED.
4. THE CRUSHED ROCK CONSTRUCTION ENTRANCE SHALL BE IN PLACE PRIOR TO GRADING.

GENERAL EROSION CONTROL NOTES

1. EROSION CONTROL SHOWN IS AN EXAMPLE AND MINIMUM. CONTRACTOR SHALL DEVELOP HIS OWN EROSION CONTROL PLAN BASED ON MEANS AND METHODS.
2. THE PURPOSE OF EROSION CONTROL IS TO PREVENT POLLUTION OF BODIES OF WATER ON OR ADJACENT TO THE PROJECT SITE. IN ADDITION, EROSION CONTROL SHALL PREVENT DAMAGE TO ADJACENT PROPERTY, AIRPORT PROPERTY AND WORK IN PROGRESS.
3. ALL EROSION AND SILTATION MEASURES ARE TO BE PLACED PRIOR TO OR AS THE FIRST STEP IN GRADING.
4. IT SHALL BE THE CONTRACTOR'S RESPONSIBILITY TO INSPECT ALL EROSION CONTROL DEVICES PERIODICALLY AND AFTER EVERY RAINFALL. ANY NECESSARY REPAIRS OR CLEANUP TO MAINTAIN THE EFFECTIVENESS OF THE EROSION CONTROL DEVICES SHALL BE MADE IMMEDIATELY.
5. DURING CONSTRUCTION, ALL STORM DRAIN INLETS WILL BE PROTECTED AS SHOWN, MAINTAINED AND MODIFIED AS REQUIRED BY CONSTRUCTION PROGRESS.
6. ALL CONSTRUCTION DISCHARGE WATER SHALL BE ADEQUATELY FILTERED TO REMOVE SILT PRIOR TO DISCHARGE INTO WATERWAYS AND WETLANDS.
7. A WATER TRUCK WILL BE KEPT ON SITE DURING EARTHWORK OPERATIONS AND UTILIZED AS REQUIRED TO MINIMIZE DUST FROM WIND AND EARTHWORK OPERATIONS.
8.

RS&H

RS&H, Inc.
13750 SAN PEDRO AVE, SUITE 300
SAN ANTONIO, TX 78232
(210) 224-2800 FAX (210) 545-3103
WWW.RSANDH.COM
REGISTERED FIRM NO: F-3401

SAN ANTONIO INTERNATIONAL AIRPORT
SAN ANTONIO, TEXAS

GA FIS TAXIWAY AND APRON IMPROVEMENTS

STATE OF TEXAS
AYDA S. GONZALEZ
96594
LICENSED PROFESSIONAL ENGINEER
7/25/14

REVISIONS

DATE ISSUED: JULY 2014
REVIEWED BY:
DRAWN BY:
DESIGNED BY:

RS&H PROJECT NUMBER
223-3267-004

© 2014 RS&H, INC.

SHEET TITLE

STORM WATER POLLUTION PREVENTION PLAN DETAILS

SHEET NUMBER

C452

ISSUED FOR BID
NOT FOR CONSTRUCTION

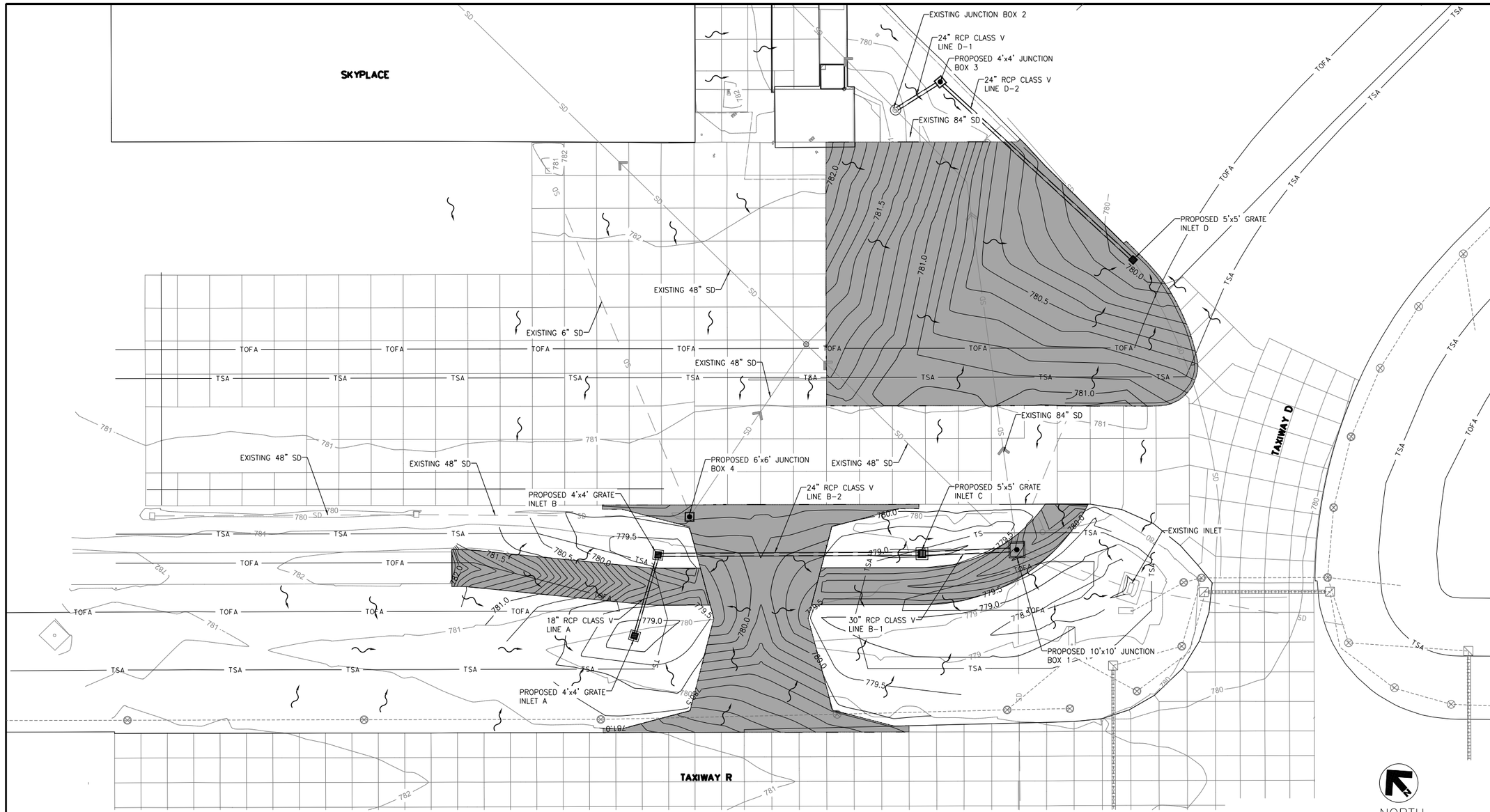

GENERAL NOTES:

1. EXISTING STORM DRAIN LINES WERE DERIVED FROM EXISTING AS-BUILTS AND ARE ONLY APPROXIMATE. CONTRACTOR TO FIELD VERIFY ACTUAL LOCATIONS.
2. SURVEY WAS PROVIDED BY VICKREY & ASSOCIATES, INC. (210) 349-3271.

LEGEND

- NEW PCC PAVEMENT
- SD — STORM DRAIN FROM AS-BUILTS
- SD — STORM DRAIN FROM SURVEY
- NEW STORM DRAIN
- NEW INLET
- NEW JUNCTION BOX
- FLOW ARROWS
- 780.0 — NEW MAJOR CONTOUR
- 780.5 — NEW MINOR CONTOUR

RS&H

Reynolds, Smith and Hills, Inc.
13750 SAN PEDRO AVE, SUITE 300
SAN ANTONIO, TX 78232
(210) 224-2800 FAX (210) 545-3103
WWW.RSANDH.COM
REGISTERED FIRM NO: F-3401

SAN ANTONIO INTERNATIONAL AIRPORT
SAN ANTONIO, TEXAS

SAN ANTONIO AIRPORT SYSTEM

GA FIS TAXIWAY AND APRON IMPROVEMENTS

STATE OF TEXAS
AYDA S. GONZALEZ
96594
LICENSED
PROFESSIONAL ENGINEER
7/25/14

REVISIONS

DATE ISSUED: JUNE 2014
REVIEWED BY: ASG
DRAWN BY: MO
DESIGNED BY: AR

RS&H PROJECT NUMBER
223-3267-004

© 2014 REYNOLDS, SMITH AND HILLS INC.

SHEET TITLE

GENERAL DRAINAGE PLAN

SHEET NUMBER

C500

ISSUED FOR BID
NOT FOR CONSTRUCTION

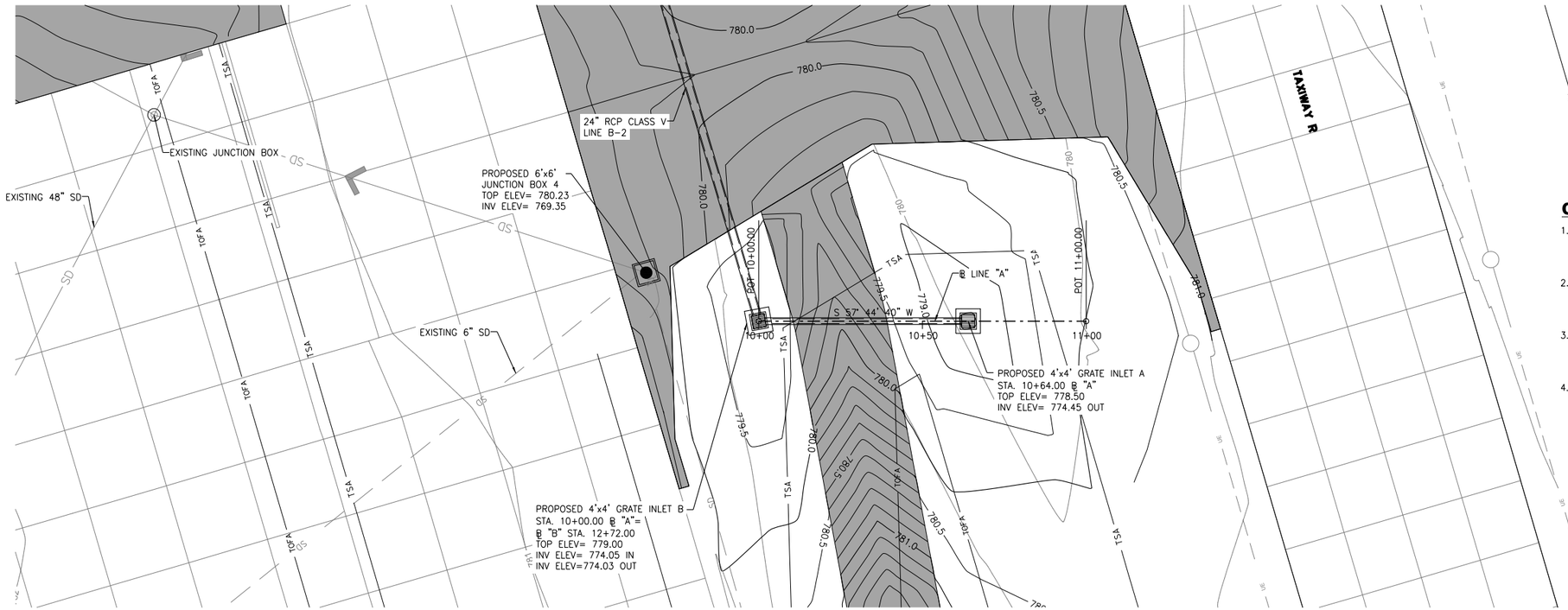

NORTH

20' 10' 0 20'

SCALE IN FEET

GENERAL NOTES:

1. EXISTING STORM DRAIN LINES WERE DERIVED FROM EXISTING AS-BUILT AND ARE ONLY APPROXIMATE. CONTRACTOR TO FIELD VERIFY ACTUAL LOCATIONS.
2. CONTRACTOR TO FURNISH AIRCRAFT RATED STORM DRAIN STRUCTURES, GRATES AND/OR CAST COVERS FOR GRATE INLET B AND JUNCTION BOX 4.
3. CONTRACTOR TO TIE IN ALL EXISTING AND ACTIVE STORM DRAIN LINES CONNECTING TO PROPOSED JUNCTION BOX 4.
4. SURVEY WAS PROVIDED BY VICKREY & ASSOCIATES, INC. (210) 349-3271.

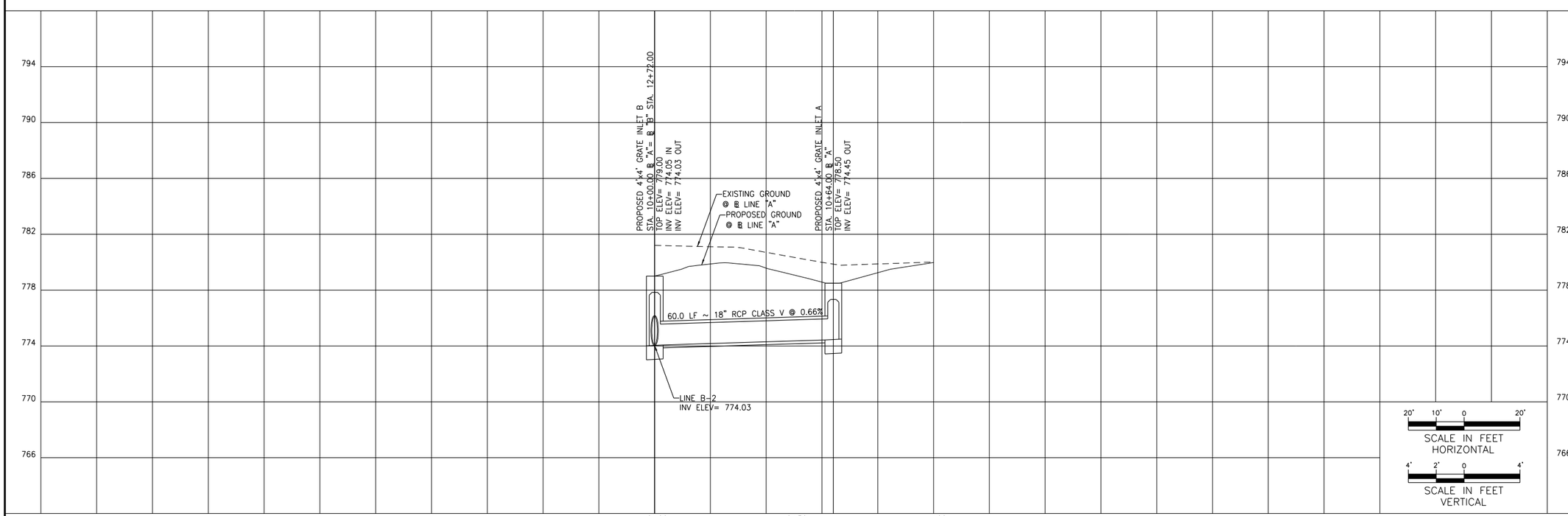

RS&H

Reynolds, Smith and Hills, Inc.
13750 SAN PEDRO AVE, SUITE 300
SAN ANTONIO, TX 78232
(210) 224-2800 FAX (210) 545-3103
WWW.RSANDH.COM
REGISTERED FIRM NO: F-3401

SAN ANTONIO INTERNATIONAL AIRPORT
SAN ANTONIO, TEXAS

SAN ANTONIO AIRPORT SYSTEM

GA FIS TAXIWAY AND APRON IMPROVEMENTS

STATE OF TEXAS
AYDA S. GONZALEZ
96594
LICENSED
PROFESSIONAL ENGINEER
7/25/14

REVISIONS

DATE ISSUED: JUNE 2014
REVIEWED BY: ASG
DRAWN BY: MO
DESIGNED BY: AR

RS&H PROJECT NUMBER
223-3267-004

© 2014 REYNOLDS, SMITH AND HILLS INC.

SHEET TITLE

STORM DRAIN LINE A PLAN & PROFILE

SHEET NUMBER

C501

ISSUED FOR BID
NOT FOR CONSTRUCTION

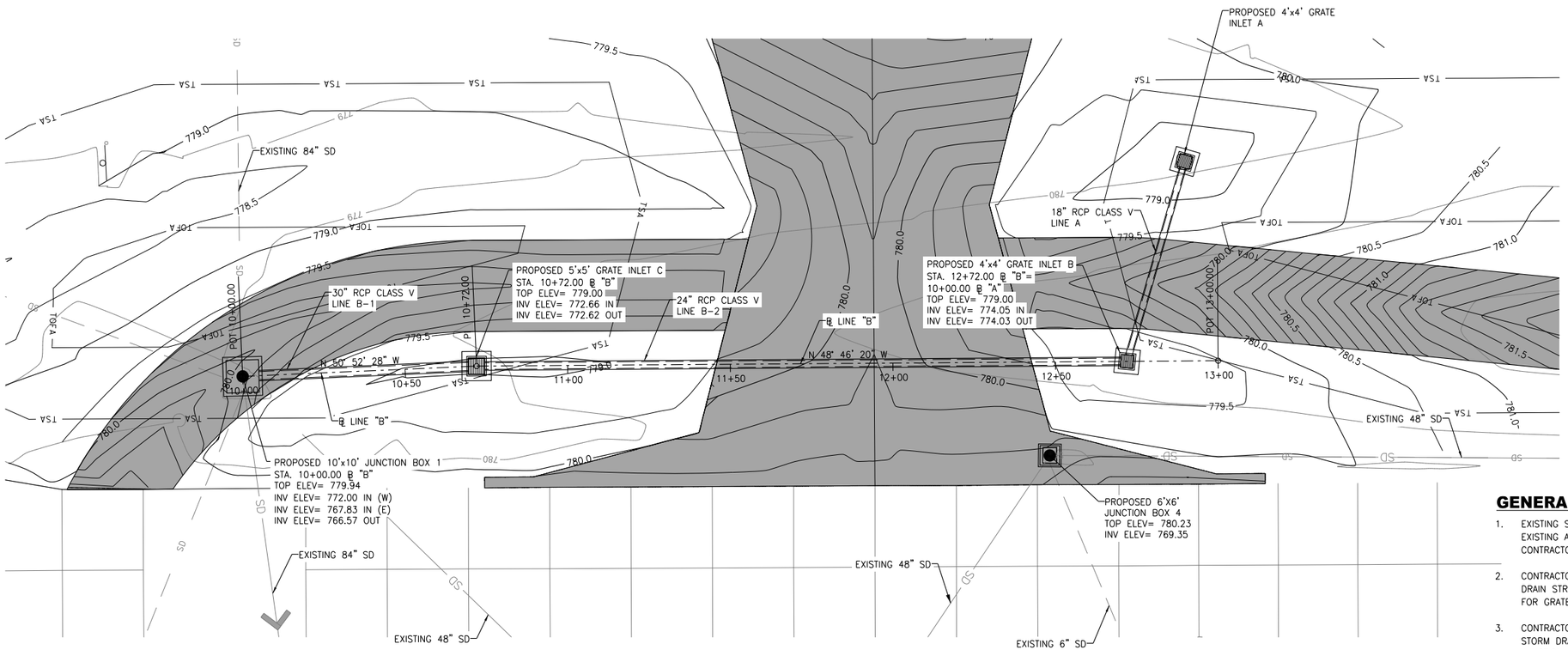

GENERAL NOTES:

1. EXISTING STORM DRAIN LINES WERE DERIVED FROM EXISTING AS-BUILT AND ARE ONLY APPROXIMATE. CONTRACTOR TO FIELD VERIFY ACTUAL LOCATIONS.
2. CONTRACTOR TO FURNISH AIRCRAFT RATED STORM DRAIN STRUCTURES, GRATES AND/OR CAST COVERS FOR GRATE INLETS B AND C.
3. CONTRACTOR TO TIE IN ALL EXISTING AND ACTIVE STORM DRAIN LINES CONNECTING TO PROPOSED JUNCTION BOX 1.
4. SURVEY WAS PROVIDED BY VICKREY & ASSOCIATES, INC. (210) 349-3271.

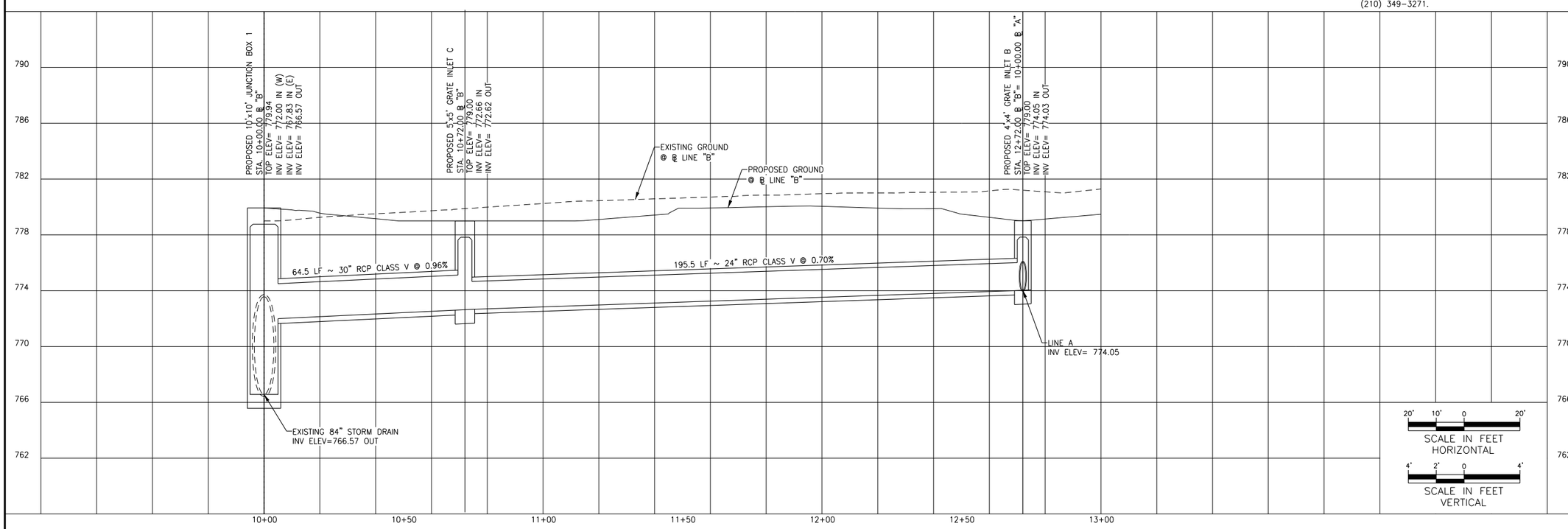

RS&H

Reynolds, Smith and Hills, Inc.
13750 SAN PEDRO AVE, SUITE 300
SAN ANTONIO, TX 78232
(210) 224-2800 FAX (210) 545-3103
WWW.RSANDH.COM
REGISTERED FIRM NO: F-3401

SAN ANTONIO INTERNATIONAL AIRPORT
SAN ANTONIO, TEXAS

GA FIS TAXIWAY AND APRON IMPROVEMENTS

STATE OF TEXAS
AYDA S. GONZALEZ
86594
LICENSED
PROFESSIONAL ENGINEER
7/25/14

REVISIONS

DATE ISSUED: JUNE 2014
REVIEWED BY: ASG
DRAWN BY: MO
DESIGNED BY: AR

RS&H PROJECT NUMBER
223-3267-004

© 2014 REYNOLDS, SMITH AND HILLS INC.

SHEET TITLE

STORM DRAIN LINE B PLAN & PROFILE

SHEET NUMBER

C502

ISSUED FOR BID
NOT FOR CONSTRUCTION

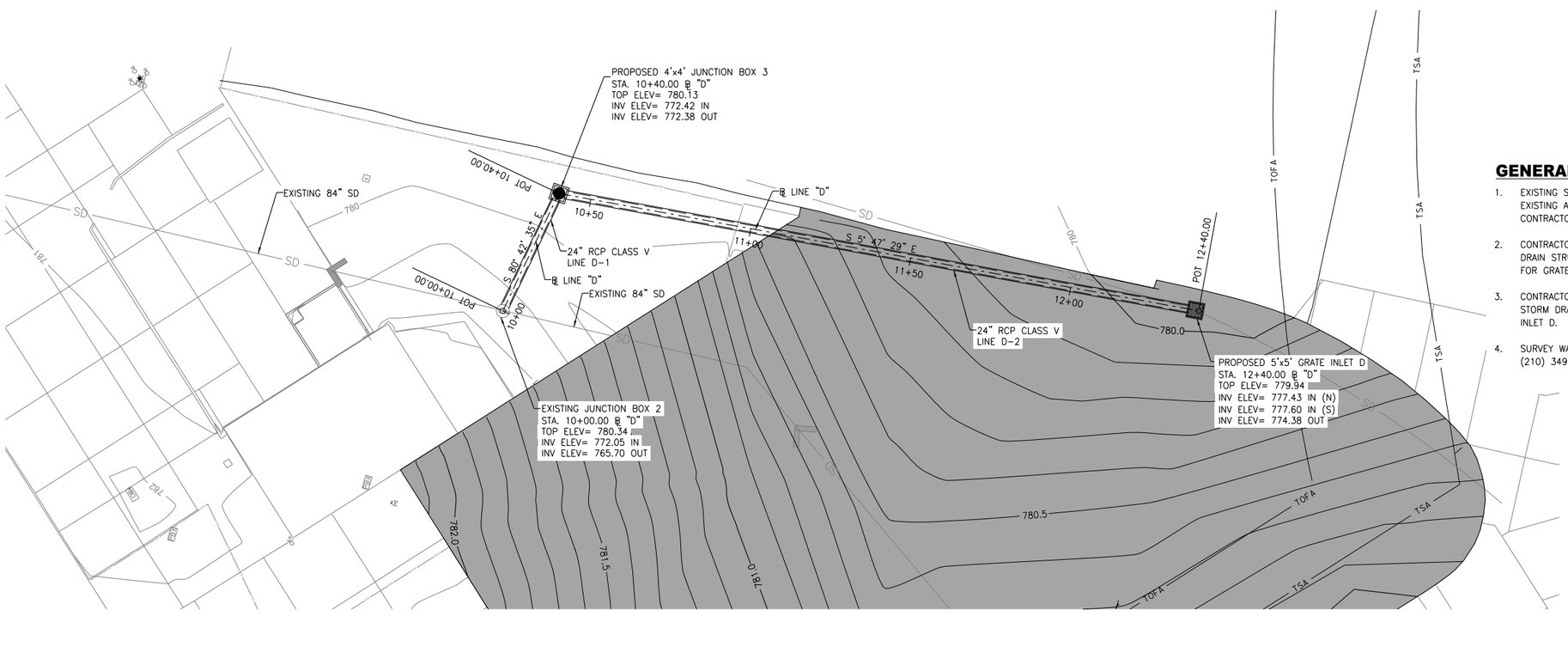

NORTH

20' 10' 0 20'

SCALE IN FEET

GENERAL NOTES:

1. EXISTING STORM DRAIN LINES WERE DERIVED FROM EXISTING AS-BUILT AND ARE ONLY APPROXIMATE. CONTRACTOR TO FIELD VERIFY ACTUAL LOCATIONS.
2. CONTRACTOR TO FURNISH AIRCRAFT RATED STORM DRAIN STRUCTURES, GRATES AND/OR CAST COVERS FOR GRATE INLET "D".
3. CONTRACTOR TO TIE IN ALL EXISTING AND ACTIVE STORM DRAIN LINES CONNECTING TO PROPOSED INLET D.
4. SURVEY WAS PROVIDED BY VICKREY & ASSOCIATES, INC. (210) 349-3271.

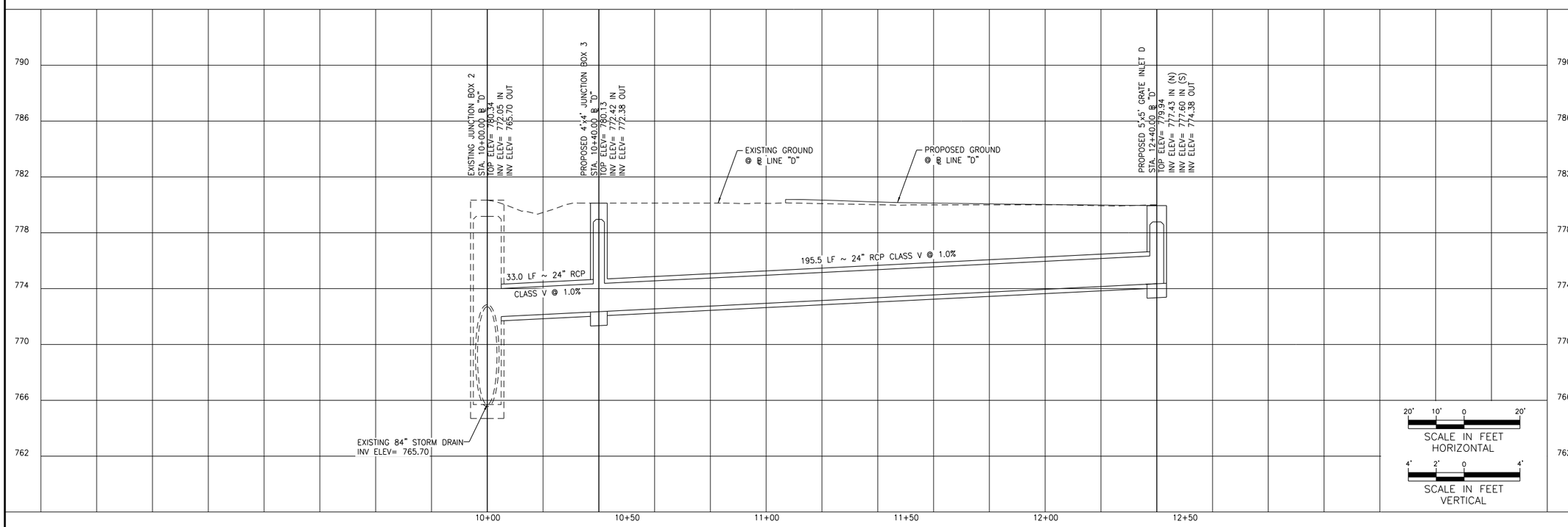

RS&H

Reynolds, Smith and Hills, Inc.
13750 SAN PEDRO AVE, SUITE 300
SAN ANTONIO, TX 78232
(210) 224-2800 FAX (210) 545-3103
WWW.RSANDH.COM
REGISTERED FIRM NO: F-3401

SAN ANTONIO INTERNATIONAL AIRPORT
SAN ANTONIO, TEXAS

SAN ANTONIO AIRPORT SYSTEM

GA FIS TAXIWAY AND APRON IMPROVEMENTS

STATE OF TEXAS
AYDA S. GONZALEZ
98594
LICENSED
PROFESSIONAL ENGINEER
7/25/14

REVISIONS

DATE ISSUED: JUNE 2014
REVIEWED BY: ASG
DRAWN BY: MO
DESIGNED BY: AR

RS&H PROJECT NUMBER
223-3267-004

© 2014 REYNOLDS, SMITH AND HILLS INC.

SHEET TITLE

STORM DRAIN LINE D PLAN & PROFILE

SHEET NUMBER

C503

ISSUED FOR BID
NOT FOR CONSTRUCTION

Precast Drainage Structures

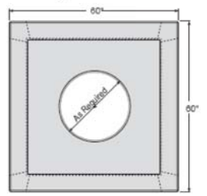

Top View

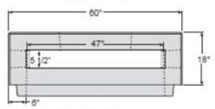

Front View

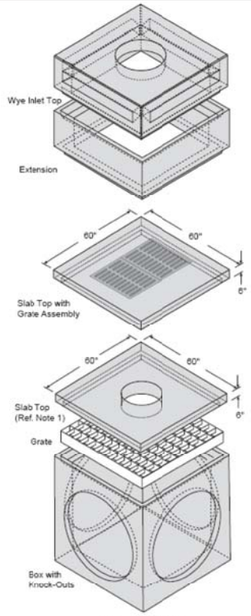

Isometric View

Item in Isometric View	Height (Inches)	Approx. Weight (Lbs.)
Wye Inlet Top	18	3,430
Extension	12 15 18 21 24	1,350 1,688 2,025 2,363 2,700
Slab Top	6	1,340
Grate	3 1/4	433
Box	Varies	

Note:
1.) Customer to specify opening size or cast iron ring and cover.

-No Scale-
All dimensions subject to allowable specification tolerances.

TITLE	PLANT	STATE	SECTION/PAGE	DATE	
Top Options for 4' x 4' Precast Box	Grand Prairie Houston	TX	9.2	08-15-06	Hanson

1 / C504 **4'x4' GRATE INLET & JUNCTION BOX**
SCALE: N.T.S.

Precast Drainage Structures

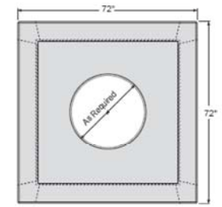

Top View

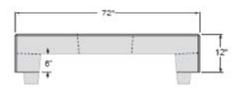

Front View

Item in Isometric View	Height (Inches)	Approx. Weight (Lbs.)
Wye Inlet Top	12"	
Slab Top	6	4,400
Grate	4 1/2"	850
Box	Varies	

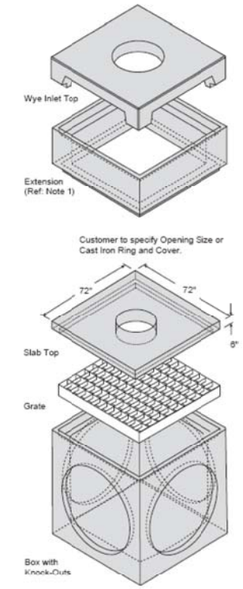

Isometric View

Note:
1.) For information on extensions contact your Hanson Representative.

-No Scale-
All dimensions subject to allowable specification tolerances.

TITLE	PLANT	STATE	SECTION/PAGE	DATE	
5' x 5' Precast Box	Grand Prairie	TX	9.3	08-15-06	Hanson

2 / C504 **5'x5' GRATE INLET**
SCALE: N.T.S.

Precast Drainage Structures

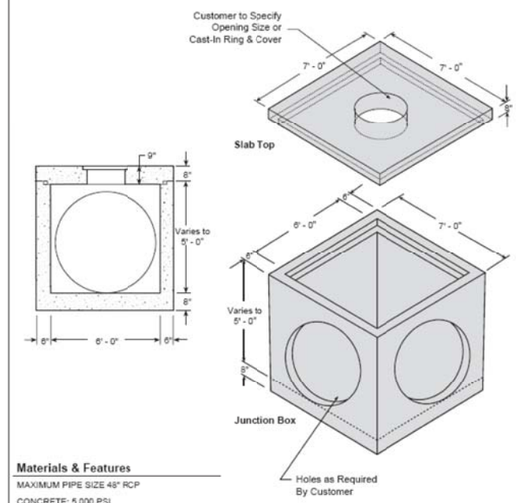

Materials & Features

MAXIMUM PIPE SIZE 48" RCP
CONCRETE: 5,000 PSI
REINFORCING: per ASTM A-615 or A-185
AIRCRAFT RATED
TOP SLAB WEIGHT: 5,600 Lbs.
JUNCTION BOX WEIGHT: 16,600 Lbs. (6' x 6' x 5')
EXTENSION SECTIONS AVAILABLE

-No Scale-
All dimensions subject to allowable specification tolerances.

TITLE	PLANT	STATE	SECTION/PAGE	DATE	
6' x 6' Standard Junction Box With Variable Depths	Grand Prairie Houston Waco	TX	9.4	08-15-06	Hanson

3 / C504 **6'x6' JUNCTION BOX**
SCALE: N.T.S.

Precast Drainage Structures

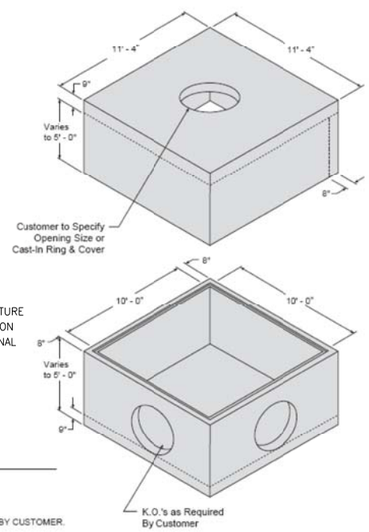

SEE FUEL-TRUCK STRUCTURE DESIGN CRITERIA NOTES ON THIS SHEET FOR ADDITIONAL REQUIREMENTS

Materials & Features

CONCRETE: 5,000 PSI
REINFORCING: GRADE 60.

CAST-IN RING AS SPECIFIED BY CUSTOMER.

BOTTOM WEIGHT:
2' ..... 23,000 Lbs.
3' ..... 27,250 Lbs.
4' ..... 31,500 Lbs.
5' ..... 35,800 Lbs.

TOP WEIGHT:
2' ..... 23,000 Lbs.
3' ..... 27,250 Lbs.
4' ..... 31,500 Lbs.
5' ..... 35,800 Lbs.

-No Scale-
All dimensions subject to allowable specification tolerances.

TITLE	PLANT	STATE	SECTION/PAGE	DATE	
10' x 10' Standard Junction Box With Variable Depths	Alvarado	TX	9.7	08-15-06	Hanson

4 / C504 **10'x10' JUNCTION BOX**
SCALE: N.T.S.

AIRCRAFT RATED

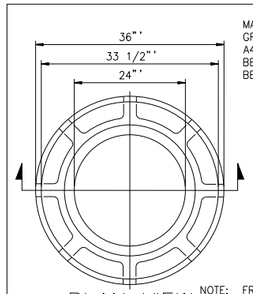

MATERIAL:
GRAY IRON, A.S.T.M. STD. SPEC. A48-83, CLASS 35B.
BEARING SURFACES SHALL BE MACHINE FINISHED.

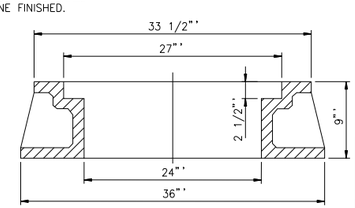

PLAN VIEW

NOTE: FRAME TO BE USED WITH COVER M AND COVER P. USE NEENAH R-3492, EJIW 1900 OR APPROVED EQUAL.

SECTION A-A

FRAME

AIRCRAFT RATED

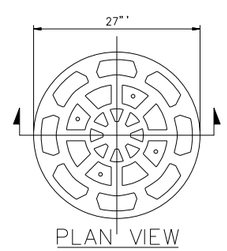

MATERIAL:
GRAY IRON, A.S.T.M. STD. SPEC. A48-83, CLASS 35B.
BEARING SURFACES SHALL BE MACHINE FINISHED.

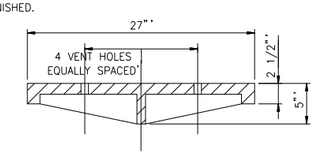

PLAN VIEW

SECTION B-B

NOTE: USE NEENAH R-3492, EJIW 1900 OR APPROVED EQUAL

COVER M

5 / C504 **JUNCTION BOX FRAME & COVER**
SCALE: N.T.S.

GENERAL NOTES:

1. CONTRACTOR TO USE HANSON PRECAST AIRCRAFT RATED STRUCTURES OR APPROVED EQUAL FOR INLETS B, C, D AND FOR JUNCTION BOX 4. SEE DETAIL 5 FOR JUNCTION BOX 1 AND DETAIL 1 FOR JUNCTION BOX 3, THIS SHEET.
2. CONTRACTOR TO COORDINATE WITH PRECAST STRUCTURE MANUFACTURER FOR JUNCTION BOX 1 TO ENSURE THE FUEL TRUCK DESIGN LOADING CRITERIA IS MET. SUBMIT SIGNED AND SEALED PRECAST SHOP DRAWINGS AND CALCULATIONS TO THE ENGINEER FOR APPROVAL.
3. CONTRACTOR TO USE AIRCRAFT RATED NEENAH FRAMES, GRATES AND/OR CAST LIDS OR APPROVED EQUAL FOR AIRCRAFT RATED AND FUEL TRUCK RATED STRUCTURES. GRATES SHALL BE SQUARE AND MATCH THE INLET OPENING.

FUEL-TRUCK STRUCTURE DESIGN CRITERIA NOTES:

FUEL-TRUCK LOAD DIAGRAM

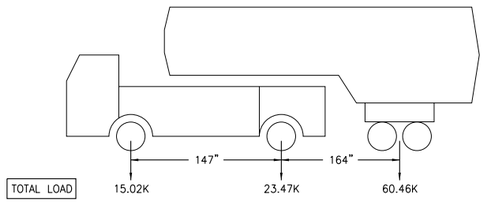

RS&H

Reynolds, Smith and Hills, Inc.
13750 SAN PEDRO AVE, SUITE 300
SAN ANTONIO, TX 78232
(210) 224-2800 FAX (210) 545-3103
WWW.RSANDH.COM
REGISTERED FIRM NO: F-3401

SAN ANTONIO INTERNATIONAL AIRPORT
SAN ANTONIO, TEXAS

GA FIS TAXIWAY AND APRON IMPROVEMENTS

STATE OF TEXAS
AYDA S. GONZALEZ
96594
LICENSED
PROFESSIONAL ENGINEER
7/25/14

FOR NOTES ONLY

REVISIONS

DATE ISSUED: JUNE 2014
REVIEWED BY: ASG
DRAWN BY: MO
DESIGNED BY: AR

RS&H PROJECT NUMBER
223-3267-004

© 2014 REYNOLDS, SMITH AND HILLS INC.

SHEET TITLE

STORM DRAIN DETAILS

SHEET NUMBER

C504

ISSUED FOR BID
NOT FOR CONSTRUCTION

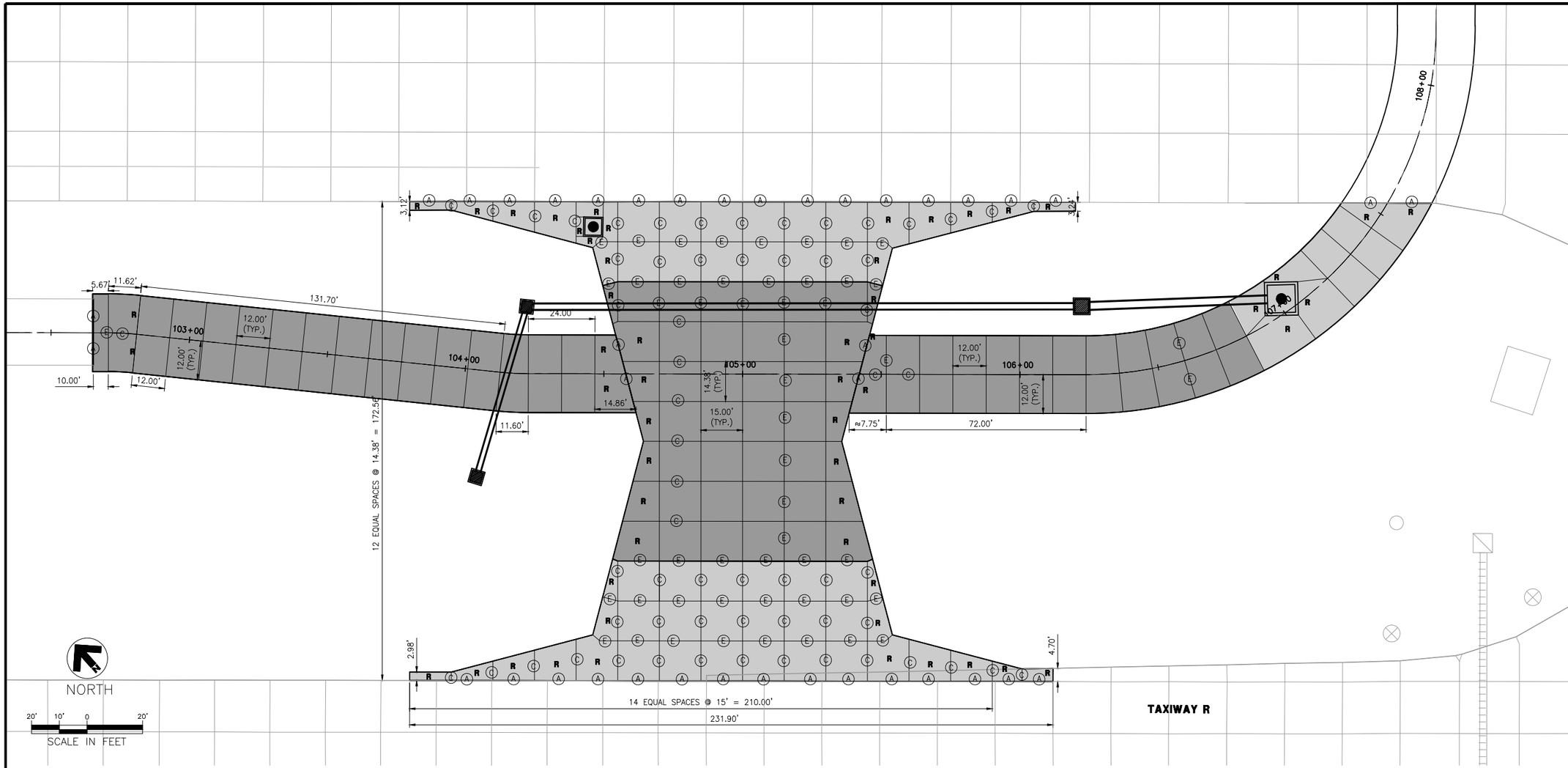

FIS TAXIWAY & PERIMETER ROAD JOINT LAYOUT PLAN

GENERAL NOTES:

1. SEE SHEETS C620–C621 FOR JOINT DETAILS.
2. REFER TO SHEETS C008–C014 FOR PHASING PLANS.

LEGEND

—— TSA ——	TAXIWAY SAFETY AREA
—— TOFA ——	TAXIWAY OBJECT FREE AREA
Ⓐ	PROPOSED TYPE A THICKENED EDGE EXPANSION JOINT
Ⓒ	PROPOSED TYPE C DOWELED CONTRACTION JOINT
Ⓔ	PROPOSED TYPE E DOWELED CONSTRUCTION JOINT
R	REINFORCED PCC PAVEMENT PANEL
	PCC PAVEMENT COMPLETED DURING PHASE 1C
	PCC PAVEMENT COMPLETED DURING PHASE 1D

RS&H

RS&H, Inc.
13750 SAN PEDRO AVE, SUITE 300
SAN ANTONIO, TX 78232
(210) 224-2800 FAX (210) 545-3103
WWW.RSANDH.COM
REGISTERED FIRM NO: F-3401

SAN ANTONIO INTERNATIONAL AIRPORT
SAN ANTONIO, TEXAS

GA FIS TAXIWAY AND APRON IMPROVEMENTS

STATE OF TEXAS
JOHN E. HIPPCHEN
113667
LICENSED PROFESSIONAL ENGINEER
7/25/14

REVISIONS

DATE ISSUED: JULY 2014
REVIEWED BY: JEH
DRAWN BY: RS
DESIGNED BY: RS

RS&H PROJECT NUMBER
223-3267-004

© 2014 RS&H, INC.

SHEET TITLE

JOINT LAYOUT PLAN (1 OF 2)

SHEET NUMBER

C600

ISSUED FOR BID
NOT FOR CONSTRUCTION

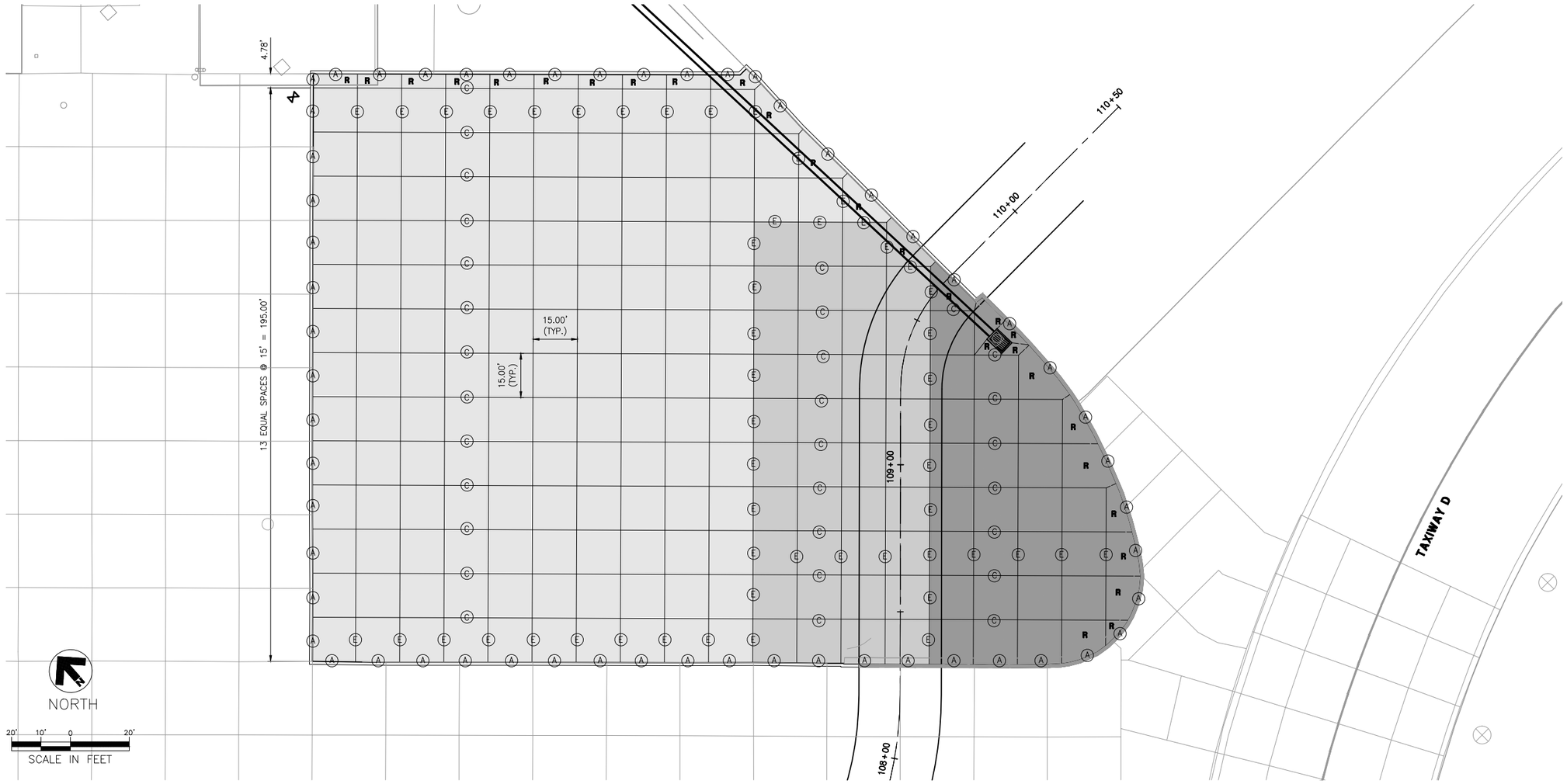

APRON JOINT LAYOUT PLAN

GENERAL NOTES:

1. SEE SHEETS C620–C621 FOR JOINT DETAILS.
2. REFER TO SHEETS C008–C014 FOR PHASING PLANS.

LEGEND

—— TSA ——	TAXIWAY SAFETY AREA
—— TOFA ——	TAXIWAY OBJECT FREE AREA
Ⓐ	PROPOSED TYPE A THICKENED EDGE EXPANSION JOINT
Ⓒ	PROPOSED TYPE C DOWELED CONTRACTION JOINT
Ⓔ	PROPOSED TYPE E DOWELED CONSTRUCTION JOINT
R	REINFORCED PCC PAVEMENT PANEL
	PCC PAVEMENT COMPLETED DURING PHASE 2A
	PCC PAVEMENT COMPLETED DURING PHASE 2B
	PCC PAVEMENT COMPLETED DURING PHASE 2C

RS&H

RS&H, Inc.
13750 SAN PEDRO AVE, SUITE 300
SAN ANTONIO, TX 78232
(210) 224-2800 FAX (210) 545-3103
WWW.RSANDH.COM
REGISTERED FIRM NO: F-3401

SAN ANTONIO INTERNATIONAL AIRPORT
SAN ANTONIO, TEXAS

GA FIS TAXIWAY AND APRON IMPROVEMENTS

STATE OF TEXAS
JOHN E. HIPPCHEN
113667
LICENSED
PROFESSIONAL ENGINEER
7/25/14

REVISIONS

DATE ISSUED: JULY 2014
REVIEWED BY: JEH
DRAWN BY: RS
DESIGNED BY: RS

RS&H PROJECT NUMBER
223-3267-004

© 2014 RS&H, INC.

SHEET TITLE

JOINT LAYOUT PLAN (2 OF 2)

SHEET NUMBER

C601

ISSUED FOR BID
NOT FOR CONSTRUCTION

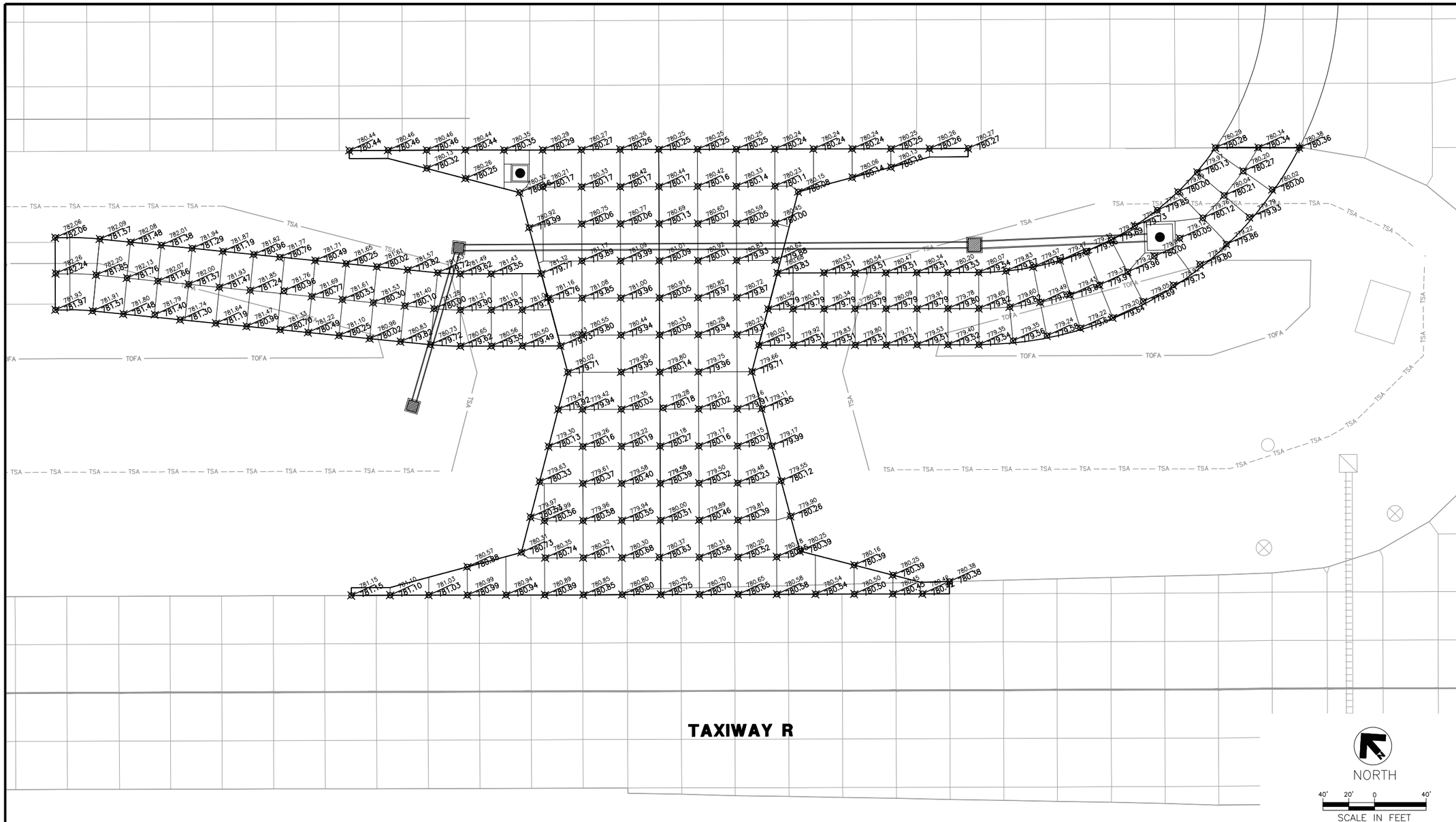

LEGEND

80.00 — EXISTING GROUND ELEVATION / PROPOSED GROUND ELEVATION

RS&H

RS&H, Inc.
13750 SAN PEDRO AVE, SUITE 300
SAN ANTONIO, TX 78232
(210) 224-2800 FAX (210) 545-3103
WWW.RSANDH.COM
REGISTERED FIRM NO: F-3401

SAN ANTONIO INTERNATIONAL AIRPORT
SAN ANTONIO, TEXAS

SAN ANTONIO INTERNATIONAL AIRPORT

GA FIS TAXIWAY AND APRON IMPROVEMENTS

STATE OF TEXAS
JOHN E. HIPPCHEN
113967
LICENSED
PROFESSIONAL ENGINEER
7/25/14

REVISIONS

DATE ISSUED: JULY 2014
REVIEWED BY:
DRAWN BY:
DESIGNED BY:

RS&H PROJECT NUMBER
223-3267-004

© 2014 RS&H, INC.

SHEET TITLE

CONCRETE JOINT AND SPOT ELEVATIONS (1 OF 2)

SHEET NUMBER

C602

ISSUED FOR BID
NOT FOR CONSTRUCTION

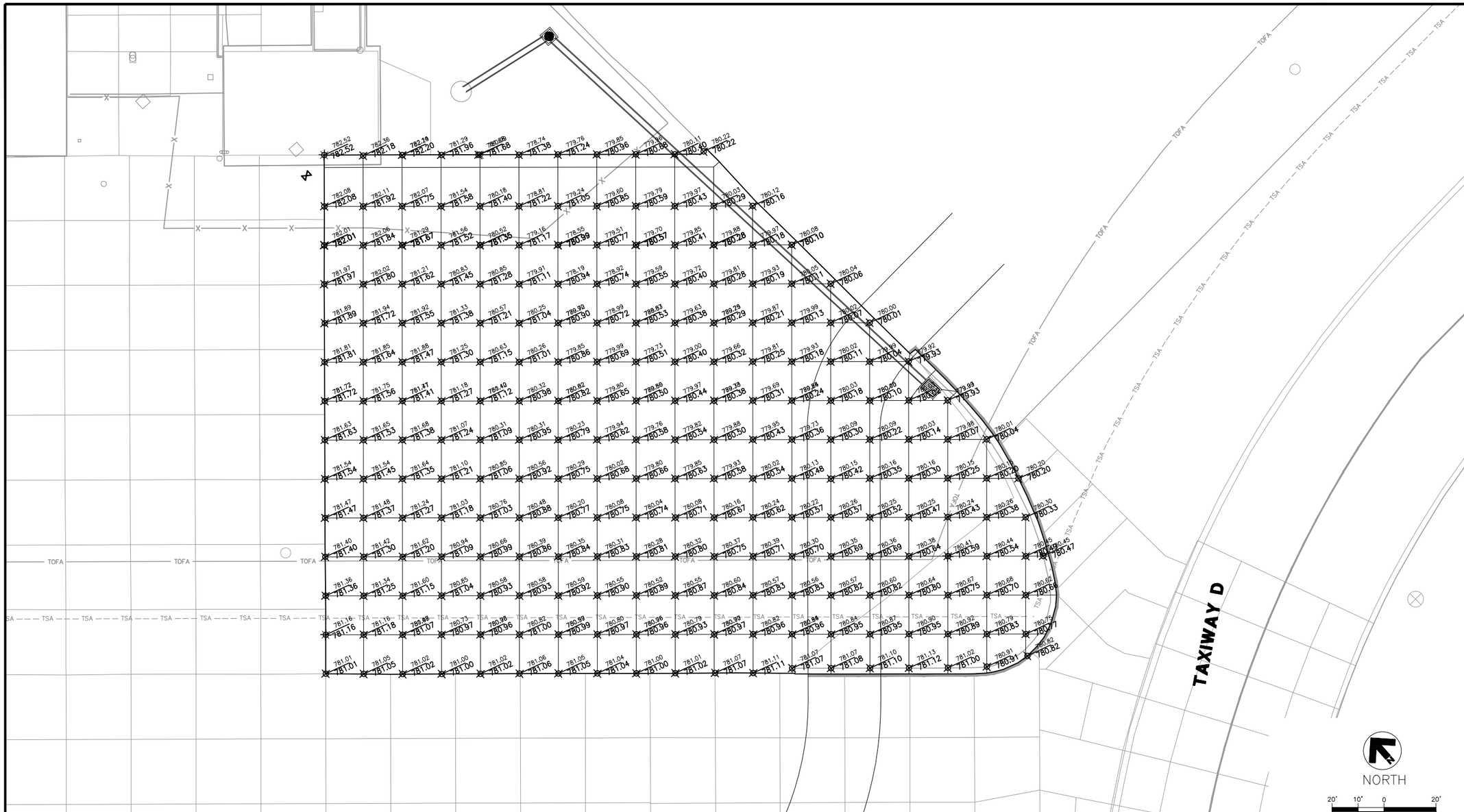

LEGEND

80.20 / 80.00 — EXISTING GROUND ELEVATION/ PROPOSED GROUND ELEVATION

RS&H

RS&H, Inc.
13750 SAN PEDRO AVE, SUITE 300
SAN ANTONIO, TX 78232
(210) 224-2800 FAX (210) 545-3103
WWW.RSANDH.COM
REGISTERED FIRM NO: F-3401

SAN ANTONIO INTERNATIONAL AIRPORT
SAN ANTONIO, TEXAS

SAN ANTONIO INTERNATIONAL AIRPORT

GA FIS TAXIWAY AND APRON IMPROVEMENTS

STATE OF TEXAS
JOHN E. HIPPCHEN
113667
LICENSED
PROFESSIONAL ENGINEER
7/25/14

REVISIONS

DATE ISSUED: JULY 2014
REVIEWED BY:
DRAWN BY:
DESIGNED BY:

RS&H PROJECT NUMBER
223-3267-004

© 2014 RS&H, INC.

SHEET TITLE

CONCRETE JOINT AND SPOT ELEVATIONS (2 OF 2)

SHEET NUMBER

C603

ISSUED FOR BID
NOT FOR CONSTRUCTION

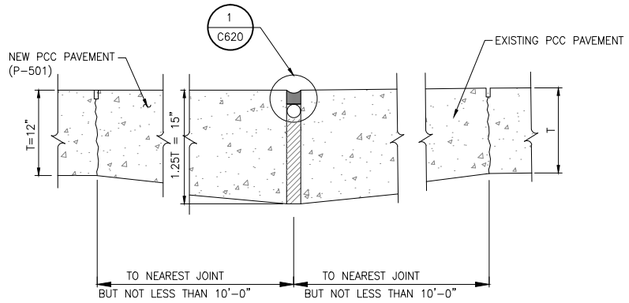

A TYPE A THICKENED EDGE EXPANSION JOINT DETAIL

SCALE: NTS

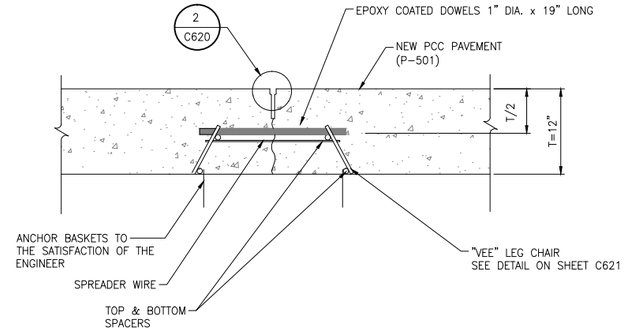

C TYPE C DOWELED CONTRACTION JOINT DETAIL

SCALE: NTS

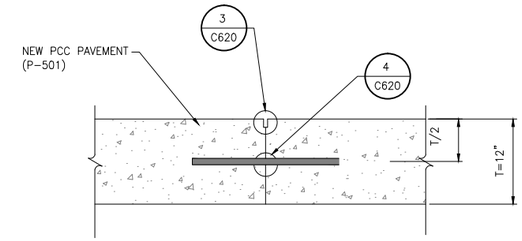

E TYPE E DOWELED CONSTRUCTION JOINT DETAIL

SCALE: NTS

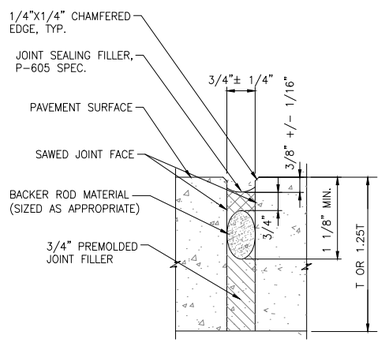

1 C620 EXPANSION JOINT

SCALE: NTS

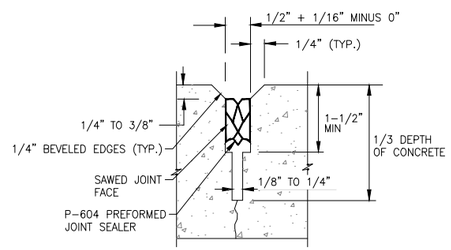

2 C620 CONTRACTION JOINT

SCALE: NTS

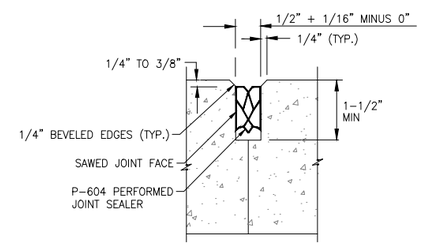

3 C620 CONSTRUCTION JOINT

SCALE: NTS

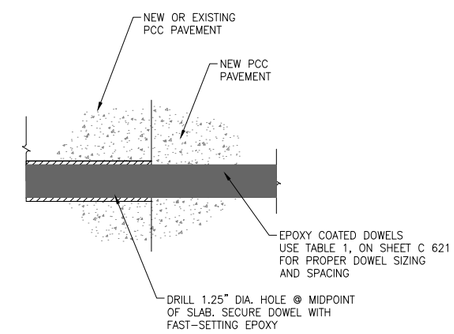

4 C620 DOWEL DETAIL

SCALE: NTS

NOTES:

1. ALL DOWELS USED FOR THIS PROJECT SHALL BE EPOXY COATED.
2. ALL MATERIALS AND WORK ASSOCIATED WITH NEW OR EXISTING JOINTS IS INCIDENTAL TO P-501.

RS&H

RS&H, Inc.
13750 SAN PEDRO AVE, SUITE 300
SAN ANTONIO, TX 78232
(210) 224-2800 FAX (210) 545-3103
WWW.RSANDH.COM
REGISTERED FIRM NO: F-3401

SAN ANTONIO
INTERNATIONAL AIRPORT
SAN ANTONIO, TEXAS

GA FIS TAXIWAY
AND APRON
IMPROVEMENTS

STATE OF TEXAS
JOHN E. HIPPCHEN
113667
LICENSED
PROFESSIONAL ENGINEER
7/25/14

REVISIONS

DATE ISSUED: JULY 2014
REVIEWED BY: JEH
DRAWN BY: RS
DESIGNED BY: RS

RS&H PROJECT NUMBER
223-3267-004

© 2014 RS&H, INC.

SHEET TITLE

JOINT DETAILS
(1 OF 2)

SHEET NUMBER

C620

ISSUED FOR BID
NOT FOR CONSTRUCTION

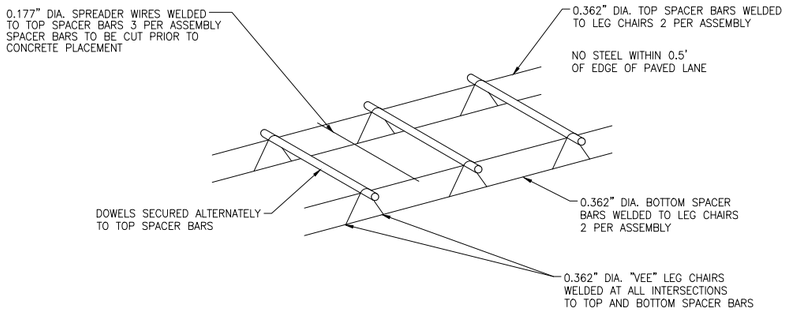

NOTES:
1. BASKET MUST BE FIRMLY ATTACHED TO EXISTING OR NEW BASE.
2. ALL WIRE SIZES SHOWN ARE MINIMUM SIZE.
3. DOWELS SHALL BE HELD FIRMLY IN THE ABOVE WELDED ASSEMBLY.
4. ALL DOWELS SHALL BE EPOXY COATED.

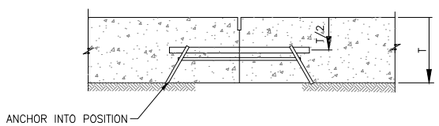

(1) FOR THIS PROJECT T=12" (APRON AND TAXIWAY CONNECTOR) AND T=8" (PERIMETER ROAD)

1 / C621 **TYPICAL DOWEL AND TIE BAR BASKET**
SCALE: NTS

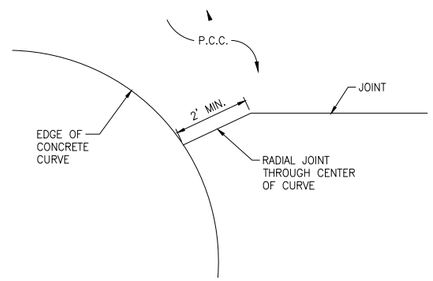

2 / C621 **TYPICAL JOINT AT CURVE**
SCALE: NTS

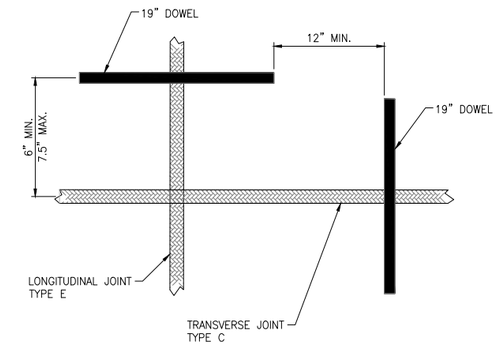

3 / C621 **POSITION OF DOWELS AT EDGE OF JOINT**
SCALE: NTS

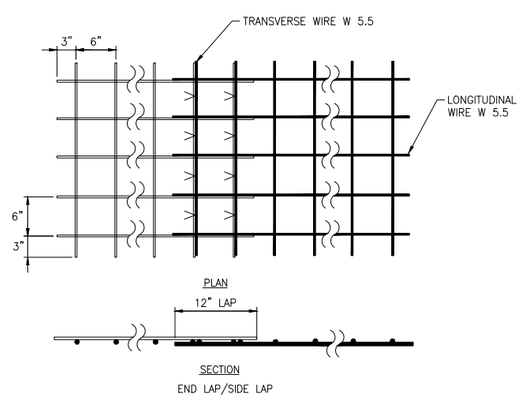

4 / C621 **WELDED WIRE FABRIC DETAILS**
SCALE: NTS

NOTES:
1. ALL IRREGULAR SHAPED SLABS SHALL BE REINFORCED.
2. ALL REINFORCEMENT SHALL BE INCIDENTAL TO THE INSTALLATION OF PCC PAVEMENT (P-501-8.1)
3. REINFORCEMENT SHALL BE PLACED T/3 + 1.5" FROM TOP OF PCC.

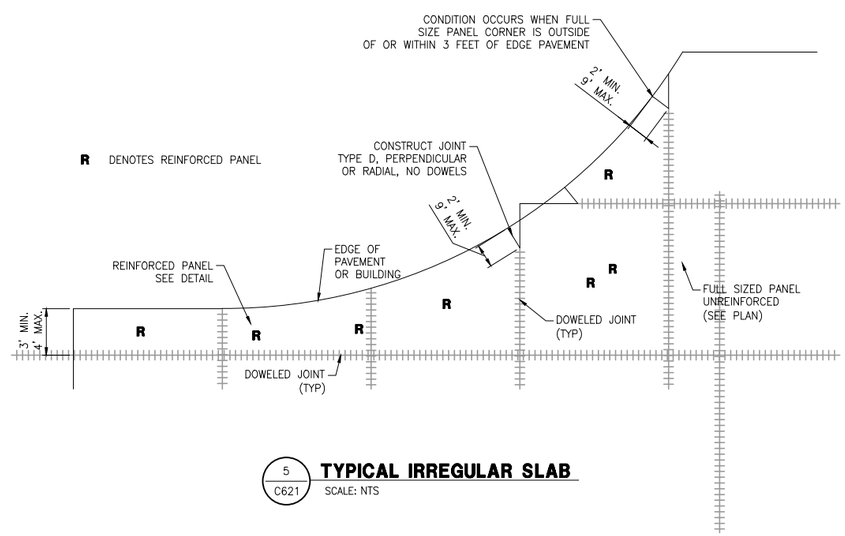

5 / C621 **TYPICAL IRREGULAR SLAB**
SCALE: NTS

DIMENSIONS AND SPACING OF STEEL DOWELS			
SLAB THICKNESS (T)	DIAMETER (d)	LENGTH (L)	SPACING
8"	1"	19"	12" O.C. MAX.
12"	1"	19"	12" O.C. MAX.

NOTES:
1. ALL DOWELS PLACED TO BE PARALLEL TO TOP OF PAVEMENT GRADES.
2. ALL DOWELS PLACED TO HAVE 50% OF LENGTH ACROSS JOINT LINES.
3. NO DOWELS SHALL BE PLACED MANUALLY IN PLASTIC CONCRETE.
4. ANY WELD ON DOWELS TO HAVE FIELD APPLIED EPOXY COATING APPLIED.
5. ALL DOWELS SHALL BE EPOXY COATED.

TABLE 1 - DIMENSIONS AND SPACING OF STEEL DOWELS

RS&H

RS&H, Inc.
13750 SAN PEDRO AVE, SUITE 300
SAN ANTONIO, TX 78232
(210) 224-2800 FAX (210) 545-3103
WWW.RSANDH.COM
REGISTERED FIRM NO: F-3401

SAN ANTONIO INTERNATIONAL AIRPORT SAN ANTONIO, TEXAS

GA FIS TAXIWAY AND APRON IMPROVEMENTS

STATE OF TEXAS
JOHN E. HIPPCHEN
113667
LICENSED
PROFESSIONAL ENGINEER
7/25/14

REVISIONS

DATE ISSUED: JULY 2014
REVIEWED BY: JEH
DRAWN BY: RS
DESIGNED BY: RS

RS&H PROJECT NUMBER
223-3267-004

© 2014 RS&H, INC.

SHEET TITLE

JOINT DETAILS (2 OF 2)

SHEET NUMBER

C621

ISSUED FOR BID
NOT FOR CONSTRUCTION

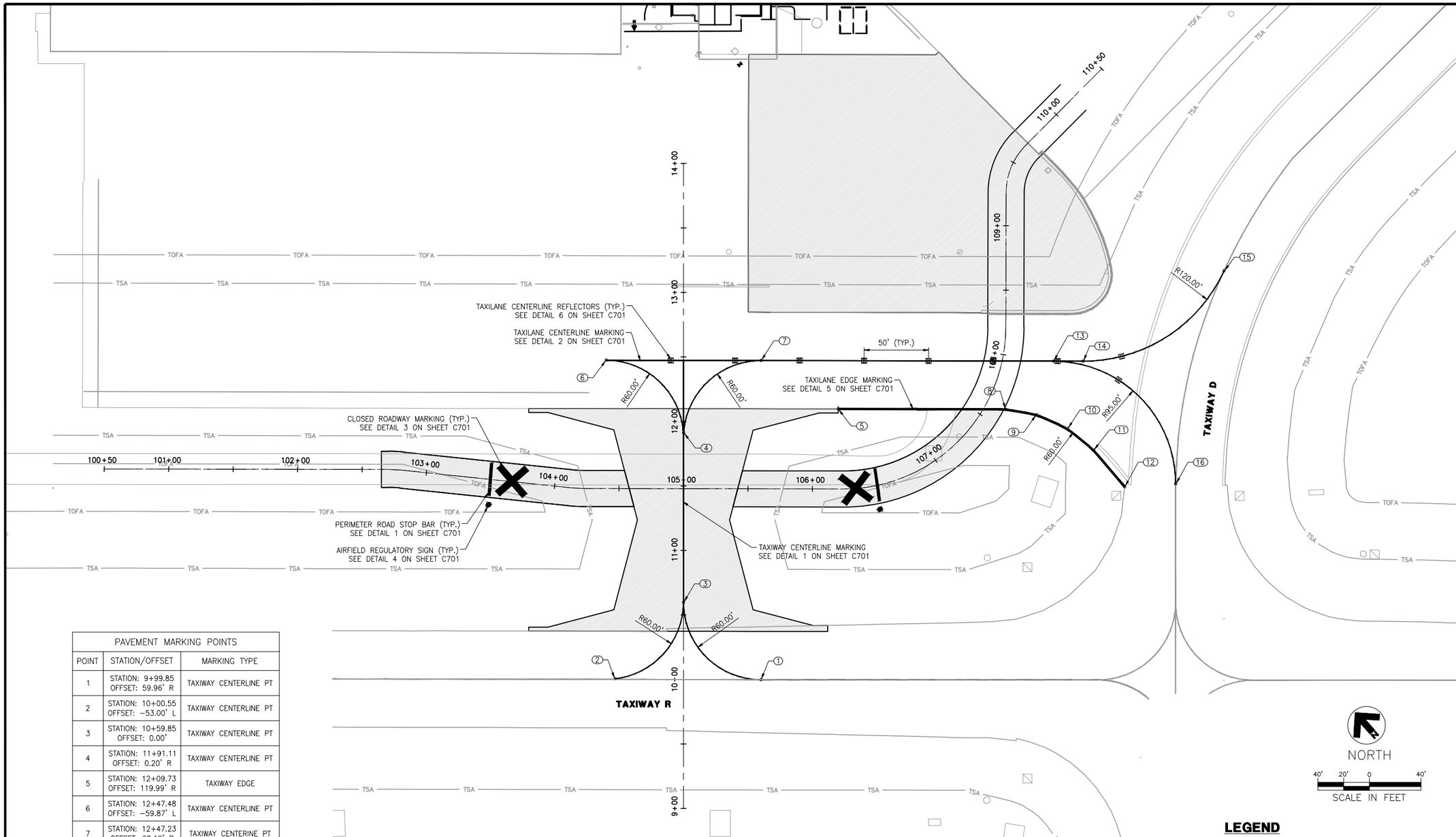

PAVEMENT MARKING POINTS		
POINT	STATION/OFFSET	MARKING TYPE
1	STATION: 9+99.85 OFFSET: 59.96' R	TAXIWAY CENTERLINE PT
2	STATION: 10+00.55 OFFSET: −53.00' L	TAXIWAY CENTERLINE PT
3	STATION: 10+59.85 OFFSET: 0.00'	TAXIWAY CENTERLINE PT
4	STATION: 11+91.11 OFFSET: 0.20' R	TAXIWAY CENTERLINE PT
5	STATION: 12+09.73 OFFSET: 119.99' R	TAXIWAY EDGE
6	STATION: 12+47.48 OFFSET: −59.87' L	TAXIWAY CENTERLINE PT
7	STATION: 12+47.23 OFFSET: 60.12' R	TAXIWAY CENTERINE PT
8	STATION: 12+09.45 OFFSET: 249.99' R	TAXIWAY EDGE
9	STATION: 12+05.30 OFFSET: 273.79' R	TAXIWAY EDGE
10	STATION: 11+94.60 OFFSET: 297.97' R	TAXIWAY EDGE
11	STATION: 11+77.81 OFFSET: 318.05' R	TAXIWAY EDGE
12	STATION: 11+49.40 OFFSET: 342.15' R	TAXIWAY EDGE
13	STATION: 12+46.77 OFFSET: 286.92' R	TAXILANE CENTERLINE PT
14	STATION: 12+46.73 OFFSET: 309.92' R	TAXILANE CENTERLINE PT
15	STATION: 13+16.72 OFFSET: 419.25' R	TAXILANE CENTERLINE PT
16	STATION: 11+51.72 OFFSET: 381.72' R	TAXILANE CENTERLINE PT

GENERAL NOTES:

1. PAVEMENT MARKING DETAILS SHALL CONFORM TO THE LATEST EDITION OF THE FEDERAL AVIATION ADMINISTRATION'S ADVISORY CIRCULAR AC-150/5340. IF A CONFLICT OCCURS BETWEEN THESE PLANS AND THE ADVISORY CIRCULAR, THE ADVISORY CIRCULAR SHALL TAKE PRECEDENCE.
2. PAVEMENT MARKINGS WITHIN TAXIWAY R AND TAXIWAY D OBJECT FREE AREAS SHALL BE DONE ON A PULL BACK BASIS. CONTRACTOR SHALL COORDINATE WITH AIRPORT OPERATIONS PRIOR TO INSTALLATION OF PAVEMENT MARKINGS.

NORTH

40' 20' 0 40'
SCALE IN FEET

LEGEND

NEW PCC PAVEMENT

TSA — TAXIWAY SAFETY AREA (TSA)

TOFA — TAXIWAY OBJECT FREE AREA (TOFA)

RS&H

RS&H, Inc.
13750 SAN PEDRO AVE, SUITE 300
SAN ANTONIO, TX 78232
(210) 224-2800 FAX (210) 545-3103
WWW.RSANDH.COM
REGISTERED FIRM NO: F-3401

SAN ANTONIO INTERNATIONAL AIRPORT
SAN ANTONIO, TEXAS

GA FIS TAXIWAY AND APRON IMPROVEMENTS

STATE OF TEXAS
JOHN E. HIPPCHEN
113667
LICENSED
PROFESSIONAL ENGINEER
7/25/14

REVISIONS

DATE ISSUED: JULY 2014
REVIEWED BY: NSG
DRAWN BY: ALL
DESIGNED BY: JEH

RS&H PROJECT NUMBER
223-3267-004

© 2014 RS&H, INC.

SHEET TITLE

PAVEMENT MARKING PLAN

SHEET NUMBER

C700

ISSUED FOR BID
NOT FOR CONSTRUCTION

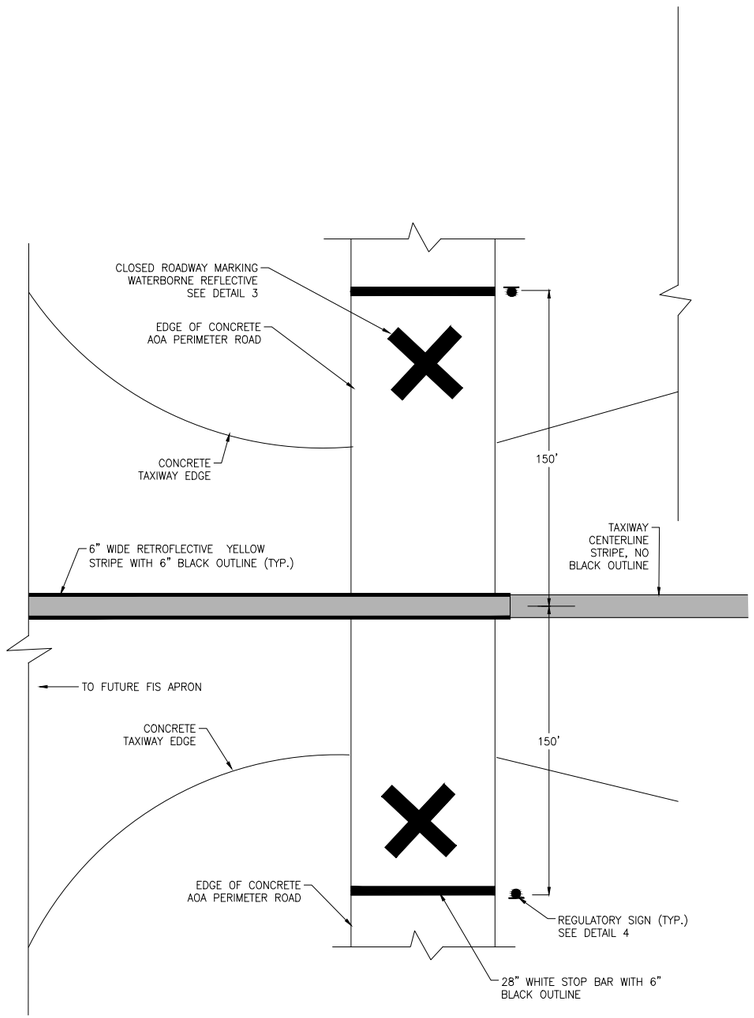

1 / C701 **AIRFIELD PERIMETER ROAD/TAXIWAY INTERSECTION**
SCALE: N.T.S.

NOTES:

1. DISTANCE MEASURED FOR STOP BAR IS USING ROADWAY ALIGNMENT

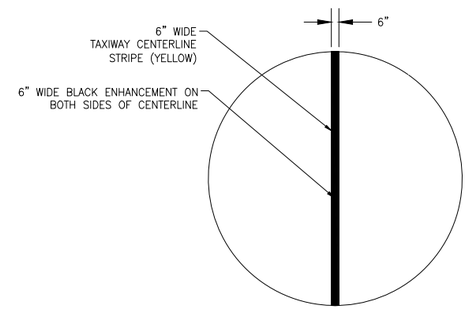

2 / C701 **TAXIWAY CENTERLINE MARKING**
SCALE: N.T.S.

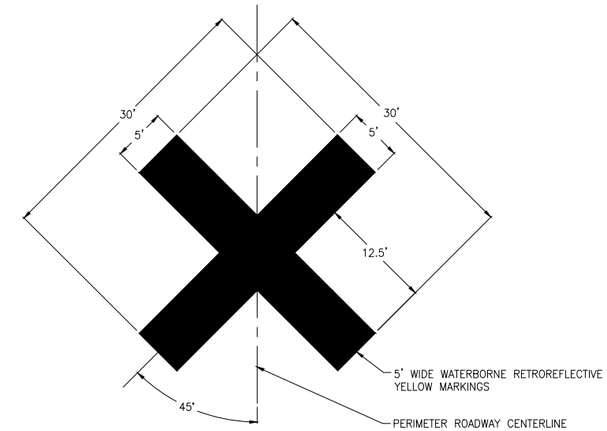

3 / C701 **ROADWAY MARKING DETAIL**
SCALE: N.T.S.

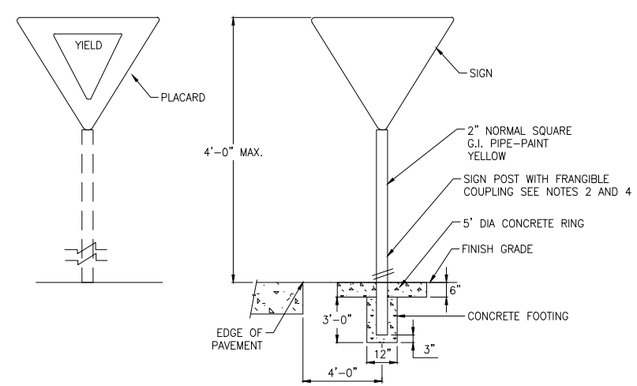

4 / C701 **AIRFIELD REGULATORY SIGN DETAIL (LOCATED AT TAXIWAY CROSSINGS)**
SCALE: N.T.S.

NOTES:

1. YIELD SIGN PLACARD SHALL BE CONTRACTOR INSTALLED.
2. SIGN POST AND STUB SHALL BE CONTRACTOR FURNISHED AND INSTALLED. ALL SIGNPOSTS SHALL BE TWO PIECE WITH FRANGIBLE COUPLING.
3. ALL GUIDANCE SIGNAGE SHALL BE IN ACCORDANCE WITH MANUAL ON TRAFFIC CONTROL DEVICES (MUTCD).
4. FRANGIBLE COUPLING FOR AIRFIELD REGULATORY SIGN MUST BE IN ACCORDANCE WITH AC 150/5220-23 " FRANGIBLE CONNECTION".

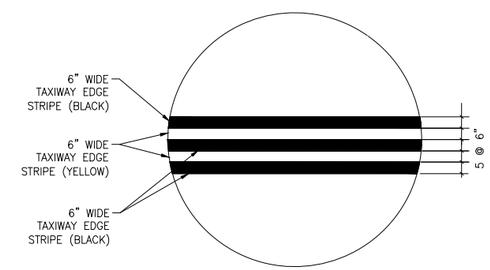

5 / C701 **CONTINOUS TAXIWAY EDGE LINE MARKING**
SCALE: N.T.S.

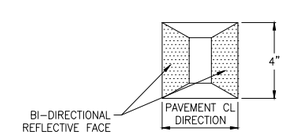

6 / C701 **TAXILANE REFLECTORS**
SCALE: N.T.S.

NOTES:

1. REFLECTORS SHALL BE GREEN AND CONFORM TO (L-853), TYPE I, STYLE II.

RS&H

RS&H, Inc.
13750 SAN PEDRO AVE, SUITE 300
SAN ANTONIO, TX 78232
(210) 224-2800 FAX (210) 545-3103
WWW.RSANDH.COM
REGISTERED FIRM NO: F-3401

SAN ANTONIO INTERNATIONAL AIRPORT SAN ANTONIO, TEXAS

GA FIS TAXIWAY AND APRON IMPROVEMENTS

STATE OF TEXAS
JOHN E. HIPPCHEN
113667
LICENSED PROFESSIONAL ENGINEER
7/25/14

REVISIONS

DATE ISSUED: JULY 2014
REVIEWED BY: NSG
DRAWN BY: ALL
DESIGNED BY: JEH

RS&H PROJECT NUMBER
223-3267-004

© 2014 RS&H, INC.

SHEET TITLE

PAVEMENT MARKING PLAN DETAILS

SHEET NUMBER

C701

ISSUED FOR BID
NOT FOR CONSTRUCTION

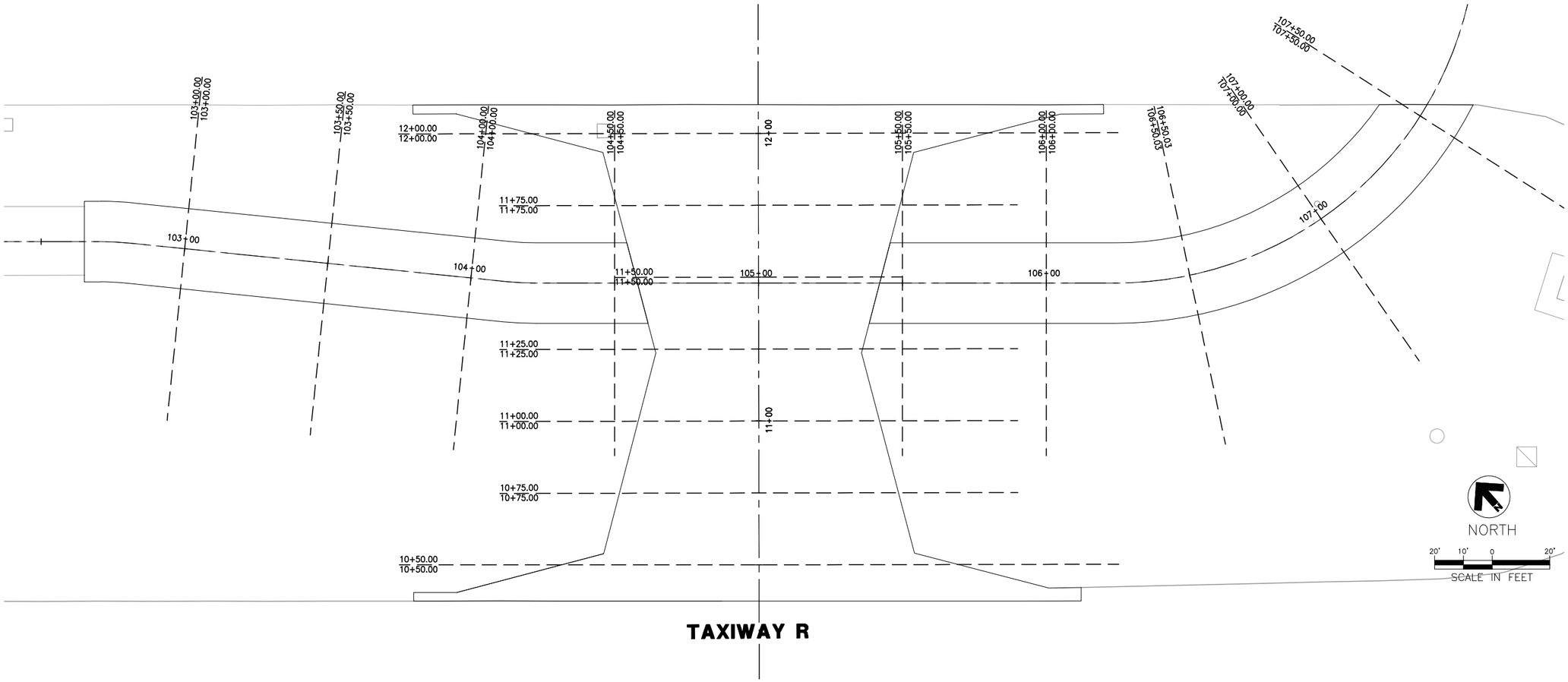

RS&H

RS&H, Inc.
13750 SAN PEDRO AVE, SUITE 300
SAN ANTONIO, TX 78232
(210) 224-2800 FAX (210) 545-3103
WWW.RSANDH.COM
REGISTERED FIRM NO: F-3401

SAN ANTONIO INTERNATIONAL AIRPORT
SAN ANTONIO, TEXAS

SAN ANTONIO INTERNATIONAL AIRPORT

GA FIS TAXIWAY AND APRON IMPROVEMENTS

STATE OF TEXAS
JOHN E. HIPPCHEN
113967
LICENSED
PROFESSIONAL ENGINEER
7/25/14

REVISIONS

DATE ISSUED: JULY 2014
REVIEWED BY: NSG
DRAWN BY: ALL
DESIGNED BY: JEH

RS&H PROJECT NUMBER
223-3267-004

© 2014 RS&H, INC.

SHEET TITLE

PERIMETER ROAD AND TAXIWAY CONNECTOR CROSS SECTION KEY PLAN

SHEET NUMBER

CX100

ISSUED FOR BID
NOT FOR CONSTRUCTION

103+00.00

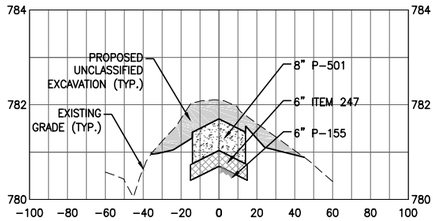

105+50.00

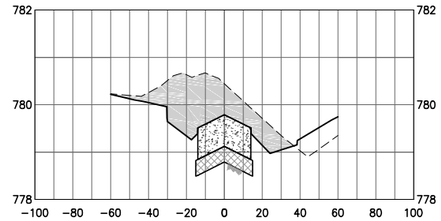

107+50.00

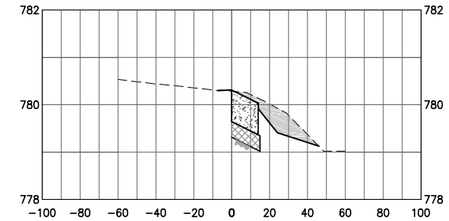

103+50.00

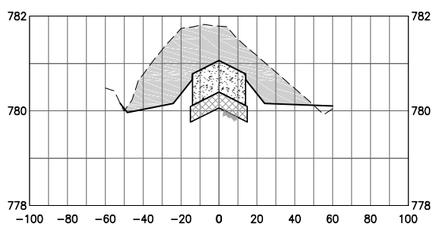

106+00.00

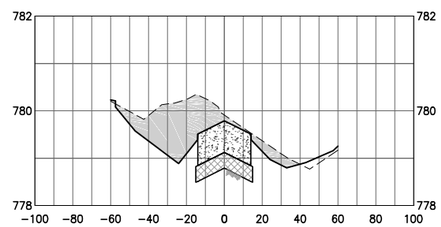

104+00.00

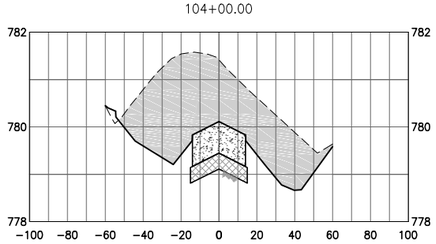

106+50.03

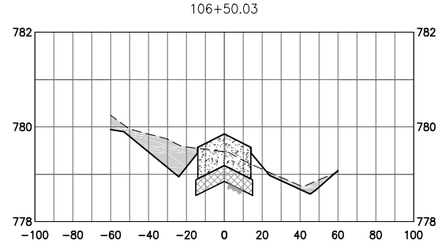

104+50.00

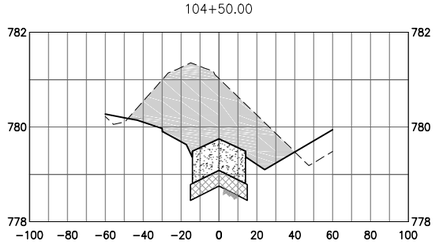

107+00.00

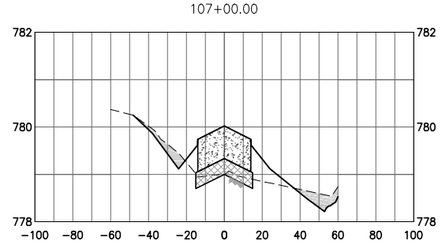

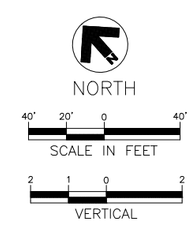

RS&H

RS&H, Inc.
13750 SAN PEDRO AVE, SUITE 300
SAN ANTONIO, TX 78232
(210) 224-2800 FAX (210) 545-3103
WWW.RSANDH.COM
REGISTERED FIRM NO: F-3401

SAN ANTONIO INTERNATIONAL AIRPORT
SAN ANTONIO, TEXAS

GA FIS TAXIWAY AND APRON IMPROVEMENTS

STATE OF TEXAS
JOHN E. HIPPCHEN
113667
LICENSED PROFESSIONAL ENGINEER
7/25/14

REVISIONS

DATE ISSUED: JULY 2014
REVIEWED BY: NSG
DRAWN BY: ALL
DESIGNED BY: JEH

RS&H PROJECT NUMBER
223-3267-004

© 2014 RS&H, INC.

SHEET TITLE

PERIMETER ROAD CROSS SECTIONS

SHEET NUMBER

CX101

ISSUED FOR BID
NOT FOR CONSTRUCTION

10+50.00

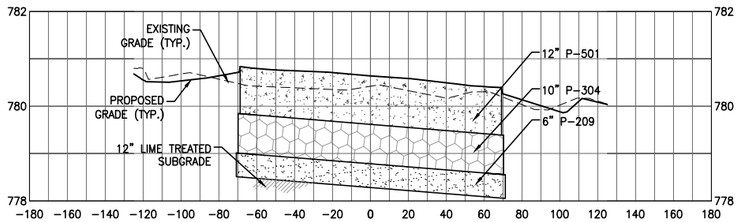

11+50.00

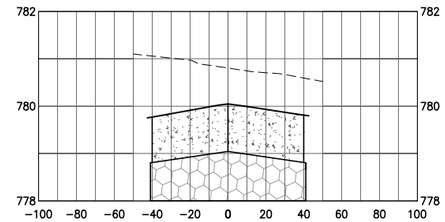

10+75.00

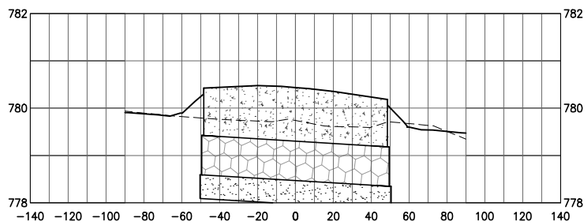

11+75.00

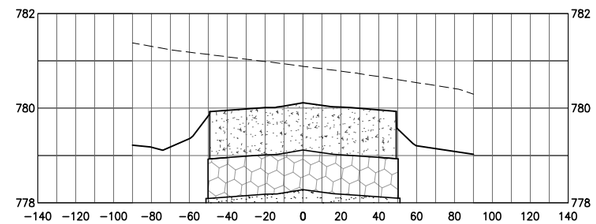

11+00.00

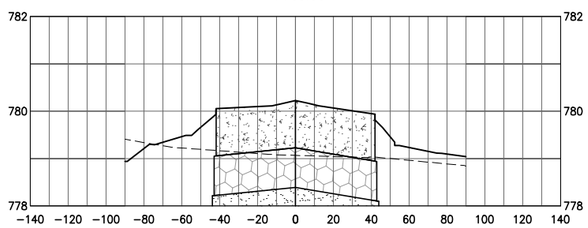

12+00.00

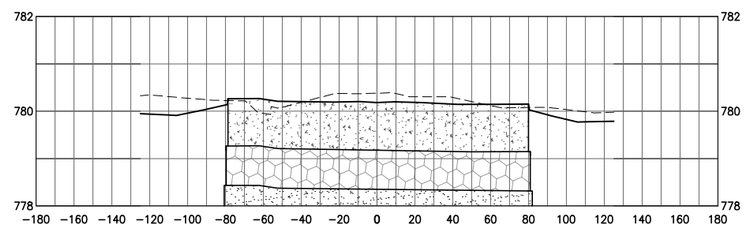

11+25.00

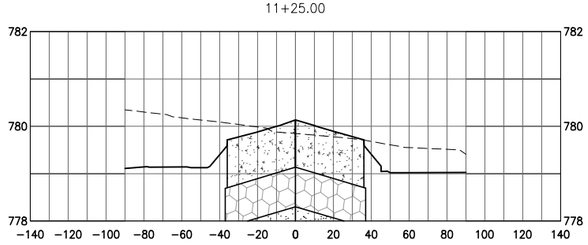

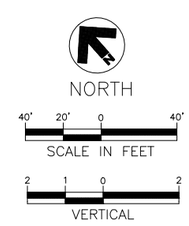

RS&H

RS&H, Inc.
13750 SAN PEDRO AVE, SUITE 300
SAN ANTONIO, TX 78232
(210) 224-2800 FAX (210) 545-3103
WWW.RSANDH.COM
REGISTERED FIRM NO: F-3401

SAN ANTONIO INTERNATIONAL AIRPORT
SAN ANTONIO, TEXAS

GA FIS TAXIWAY AND APRON IMPROVEMENTS

STATE OF TEXAS
JOHN E. HIPPCHEN
113667
LICENSED
PROFESSIONAL ENGINEER
7/25/14

REVISIONS

DATE ISSUED: JULY 2014
REVIEWED BY: NSG
DRAWN BY: ALL
DESIGNED BY: JEH

RS&H PROJECT NUMBER
223-3267-004

© 2014 RS&H, INC.

SHEET TITLE

TAXIWAY CONNECTOR CROSS SECTIONS

SHEET NUMBER

CX102

ISSUED FOR BID
NOT FOR CONSTRUCTION

GENERAL

1. ALL ELECTRICAL EQUIPMENT SHALL BE INSTALLED IN CONFORMANCE WITH NFPA 70 – NATIONAL ELECTRICAL CODE (NEC) MOST CURRENT ISSUE IN FORCE, THE RESPECTIVE EQUIPMENT MANUFACTURER'S DIRECTIONS AND ALL OTHER APPLICABLE LOCAL CODES, LAWS, ORDINANCES, AND REQUIREMENTS IN FORCE. ANY INSTALLATIONS WHICH VOID THE U.L. LISTING, ETL LISTING (OR OTHER THIRD PARTY LISTING) AND/OR THE MANUFACTURER'S WARRANTY OF A DEVICE WILL NOT BE PERMITTED.

2. THE CONTRACTOR SHALL KEEP A COPY OF THE LATEST NEC IN FORCE ON SITE AT ALL TIMES DURING CONSTRUCTION FOR USE AS A REFERENCE.

3. CONTRACTOR SHALL COORDINATE WORK AND ANY POWER OUTAGES AND/OR SHUT DOWN OF SYSTEMS WITH THE RESPECTIVE FACILITY OWNER PERSONNEL AND THE AIRPORT MANAGER/DIRECTOR. ONCE SHUT DOWN, THE CIRCUITS SHALL BE LABELED AS SUCH TO PREVENT ACCIDENTAL ENERGIZING OF THE RESPECTIVE CIRCUITS. ALL PERSONNEL SHALL FOLLOW U.S. DEPARTMENT OF LABOR OCCUPATIONAL SAFETY HEALTH ADMINISTRATION (OSHA) 29 CFR PART 1910 OCCUPATIONAL SAFETY & HEALTH STANDARDS FOR ELECTRICAL SAFETY AND LOCKOUT/TAGOUT PROCEDURES INCLUDING, BUT NOT LIMITED TO, 29 CFR SECTION 1910.147 THE CONTROL OF HAZARDOUS ENERGY (LOCKOUT/TAGOUT).

4. THE CONTRACTOR SHALL ASCERTAIN THAT ALL LIGHTING SYSTEM COMPONENTS FURNISHED, INCLUDING FAA APPROVED EQUIPMENT, ARE COMPATIBLE IN ALL RESPECTS WITH EACH OTHER AND THE REMAINDER OF THE NEW/EXISTING SYSTEM. ANY NON–COMPATIBLE COMPONENTS FURNISHED BY THIS CONTRACTOR SHALL BE REPLACED AT NO ADDITIONAL COST TO THE AIRPORT SPONSOR WITH A SIMILAR UNIT, APPROVED BY THE ENGINEER (DIFFERENT MODEL OR DIFFERENT MANUFACTURER) THAT IS COMPATIBLE WITH THE REMAINDER OF THE AIRPORT LIGHTING SYSTEM.

5. IN CASE THE CONTRACTOR ELECTS TO FURNISH AND INSTALL AIRPORT LIGHTING EQUIPMENT REQUIRING ADDITIONAL WIRING, TRANSFORMERS, ADAPTERS, MOUNTINGS, ETC. TO THOSE SHOWN ON THE DRAWINGS AND/OR LISTED IN THE SPECIFICATIONS, ANY COST FOR THESE ITEMS SHALL BE INCIDENTAL TO THE EQUIPMENT COST.

6. THE CONTRACTOR INSTALLED EQUIPMENT (INCLUDING FAA APPROVED) SHALL NOT GENERATE ANY ELECTROMAGNETIC INTERFERENCE IN THE EXISTING AND/OR NEW COMMUNICATIONS, WEATHER, AIR NAVIGATION, AND AIR TRAFFIC CONTROL EQUIPMENT. ANY EQUIPMENT GENERATING SUCH INTERFERENCE SHALL BE REPLACED BY THE CONTRACTOR AT NO ADDITIONAL COST WITH EQUIPMENT MEETING THE APPLICABLE SPECIFICATIONS AND NOT GENERATING ANY INTERFERENCE.

7. WHEN A SPECIFIC TYPE, STYLE, CLASS, ETC. OF FAA APPROVED EQUIPMENT IS SPECIFIED, ONLY THAT TYPE, STYLE, CLASS, WILL BE ACCEPTABLE, EVEN THOUGH EQUIPMENT OF OTHER TYPES, STYLES, CLASSES, ETC. MAY BE FAA APPROVED.

8. ANY AND ALL INSTRUCTIONS FROM THE ENGINEER TO THE CONTRACTOR REGARDING CHANGES IN, OR DEVIATIONS FROM, THE PLANS AND SPECIFICATIONS SHALL BE IN WRITING WITH COPIES SENT TO THE AIRPORT SPONSOR AND THE FAA FIELD OFFICE (ADO/AFO). THE CONTRACTOR SHALL NOT ACCEPT ANY VERBAL INSTRUCTIONS FROM THE ENGINEER REGARDING ANY CHANGES FROM THE PLANS AND SPECIFICATIONS.

9. A MINIMUM OF THREE COPIES OF THE INSTRUCTION BOOK SHALL BE SUPPLIED WITH EACH DIFFERENT TYPE OF EQUIPMENT. THE BOOKS DESCRIBING A MORE SOPHISTICATED TYPE OF EQUIPMENT, SUCH AS REGULATORS, PAPI, REIL, ETC. AS A MINIMUM SHALL CONTAIN THE FOLLOWING:

   A. A DETAILED DESCRIPTION OF THE OVERALL EQUIPMENT AND ITS INDIVIDUAL COMPONENTS.

   B. THEORY OF OPERATION, INCLUDING THE FUNCTION OF EACH COMPONENT.

   C. INSTALLATION INSTRUCTIONS.

   D. START–UP INSTRUCTIONS.

   E. PREVENTATIVE MAINTENANCE REQUIREMENTS.

   F. CHART FOR TROUBLESHOOTING.

   G. COMPLETE POWER AND CONTROL DETAILED WIRING DIAGRAM(S), SHOWING EACH CONDUCTOR/CONNECTION/COMPONENT – "BLACK" BOXES ARE NOT ACCEPTABLE. THE DIAGRAM OR THE NARRATIVE SHALL SHOW VOLTAGES/CURRENTS/WAVE SHAPES AT STRATEGIC LOCATIONS TO BE USED WHEN CHECKING AND/OR TROUBLE–SHOOTING THE EQUIPMENT. WHEN THE EQUIPMENT HAS SEVERAL MODES OF OPERATION, SUCH AS SEVERAL BRIGHTNESS STEPS, THESE PARAMETERS SHALL BE INDICATED FOR ALL THE DIFFERENT MODES.

   H. PARTS LIST WHICH WILL INCLUDE ALL MAJOR AND MINOR COMPONENTS, SUCH AS RESISTORS, DIODES, ETC. IT SHALL INCLUDE A COMPLETE NOMENCLATURE OF EACH COMPONENT AND, IF APPLICABLE, THE NAME OF ITS MANUFACTURER AND THE CATALOG NUMBER.

   I. SAFETY INSTRUCTIONS.

POWER AND CONTROL

1. PROVIDE ENGRAVED LEGEND PLATES FOR ALL ELECTRICAL EQUIPMENT TO IDENTIFY FUNCTION, CIRCUIT VOLTAGE, AND PHASE. WHERE THE EQUIPMENT CONTAINS FUSES, ALSO IDENTIFY THE FUSE OR FUSE LINK AMPERE RATING. WHERE THE EQUIPMENT DOES NOT HAVE SUFFICIENT AREA TO INSTALL LEGEND PLATES, THE LEGEND PLATES SHALL BE INSTALLED ON THE WALL NEXT TO THE UNIT. LEGEND PLATES SHALL BE WEATHERPROOF ADHESIVE AND MACHINE SCREWS. LEGEND PLATES SHALL HAVE 1 INCH WHITE LETTERING ON BLACK BACKGROUND. FURNISH ADDITIONAL LEGEND PLATES WHERE REQUIRED BY CODE.

2. COLOR CODE ALL PHASE WIRING BY THE USE OF COLORED WIRE INSULATION AND/OR COLORED TAPE. WHERE TAPE IS USED, THE WIRE INSULATION SHALL BE BLACK. BLACK AND RED SHALL BE USED FOR SINGLE–PHASE, THREE WIRE SYSTEMS; AND BLACK, RED, AND BLUE SHALL BE USED FOR THREE–PHASE SYSTEMS. NEUTRAL CONDUCTORS, SIZE NO. 6 AWG OR SMALLER, SHALL BE IDENTIFIED BY A CONTINUOUS WHITE OR NATURAL GRAY OUTER FINISH ALONG ITS ENTIRE LENGTH. NEUTRAL CONDUCTORS, SIZE NO. 6 AWG OR LARGER, SHALL BE IDENTIFIED EITHER BY A CONTINUOUS WHITE OR NATURAL GRAY OUTER FINISH ALONG ITS ENTIRE LENGTH OR BY THE USE OF WHITE TAPE AT ITS TERMINATIONS AND INSIDE ACCESSIBLE WIREWAYS. INSULATED GROUND CONDUCTORS SHALL HAVE GREEN COLORED INSULATION FOR ALL CONDUCTOR SIZES (AWG OR KCMIL).

3. ALL BRANCH CIRCUIT CONDUCTORS CONNECTED TO A PARTICULAR PHASE SHALL BE IDENTIFIED WITH THE SAME COLOR. THE COLOR CODING SHALL BE EXTENDED TO THE POINT OF UTILIZATION.

4. IN CONTROL WIRING, THE SAME COLOR SHALL BE USED THROUGHOUT THE SYSTEM FOR THE SAME FUNCTION, SUCH AS 10%, 30%, 100% BRIGHTNESS CONTROL, ETC.

5. LOW VOLTAGE (600 V) AND HIGH VOLTAGE (5,000 V) CONDUCTORS SHALL BE INSTALLED IN SEPARATE WIREWAYS AND CONDUITS.

6. ALL POWER AND CONTROL CIRCUIT CONDUCTORS SHALL BE COPPER; ALUMINUM SHALL NOT BE ACCEPTED. THIS INCLUDES WIRE, CABLE, BUSSES, TERMINALS, SWITCH/PANEL COMPONENTS, ETC.

7. NEATLY LACE WIRING IN DISTRIBUTION PANELS, WIREWAYS, SWITCHES AND JUNCTION/PULL BOXES.

8. THE MINIMUM SIZE OF PULL/JUNCTION BOXES, REGARDLESS OF THE QUANTITY AND THE SIZE OF THE CONDUCTORS SHOWN, SHALL BE AS FOLLOWS:

   A. IN STRAIGHT PULLS THE LENGTH OF THE BOX SHALL NOT BE LESS THAN EIGHT TIMES THE TRADE DIAMETER OF THE LARGER CONDUIT. THE TOTAL AREA (INCLUDING THE CONDUIT CROSS–SECTIONAL AREA) OF A BOX END SHALL BE AT LEAST 3 TIMES GREATER THAN THE TOTAL TRADE CROSS–SECTIONAL AREA OF THE CONDUITS TERMINATING AT THE END.

   B. IN ANGLE OR 'U' PULLS THE DISTANCE BETWEEN EACH CONDUIT ENTRY INSIDE THE BOX AND THE OPPOSITE WALL OF THE BOX SHALL NOT BE LESS THAN SIX TIMES THE TRADE DIAMETER OF THE CONDUIT. THIS DISTANCE SHALL BE INCREASED FOR ADDITIONAL ENTRIES BY THE AMOUNT OF THE SUM OF THE DIAMETERS OF ALL OTHER CONDUIT ENTRIES ON THE SAME WALL OF THE BOX. THE DISTANCE BETWEEN CONDUIT ENTRIES ENCLOSING THE SAME CONDUCTOR SHALL NOT BE LESS THAN SIX TIMES THE TRADE DIAMETER OF THE LARGEST CONDUIT.

8. A RUN OF CONDUIT BETWEEN TERMINATIONS AT EQUIPMENT ENCLOSURES, SQUARE DUCTS AND PULL/JUNCTION BOXES, SHALL NOT CONTAIN MORE THAN THE EQUIVALENT OF FOUR QUARTER BENDS (360 DEGREES TOTAL), INCLUDING THOSE BENDS LOCATED IMMEDIATELY AT THE TERMINATIONS. CAST, CONDUIT TYPE OUTLETS SHALL NOT BE TREATED AS PULL/JUNCTION BOXES.

9. EQUIPMENT CABINETS SHALL NOT BE USED AS PULL/JUNCTION BOXES. ONLY WIRING TERMINATING AT THE EQUIPMENT SHALL BE BROUGHT INTO THESE ENCLOSURES.

10. SPLICES AND JUNCTION POINTS SHALL BE PERMITTED ONLY IN JUNCTION BOXES, DUCTS EQUIPPED WITH REMOVABLE COVERS, AND AT EASILY ACCESSIBLE LOCATIONS.

11. CIRCUIT BREAKERS IN POWER DISTRIBUTION PANEL(S) SHALL BE THERMAL–MAGNETIC MOLDED CASE, PERMANENT TRIP WITH 100 AMPERE, MINIMUM, FRAME.

12. DUAL LUGS SHALL BE USED WHERE TWO WIRES, SIZE NO. 6 OR LARGER, ARE TO BE CONNECTED TO THE SAME TERMINAL.

13. ALL INTERIOR WALL MOUNTED EQUIPMENT ENCLOSURES SHALL BE MOUNTED ON HOT DIPPED GALVANIZED STEEL STRUT SUPPORT, OR STAINLESS STEEL STRUT SUPPORT, WITH CORROSION RESISTANT HARDWARE.

14. SUPPORT FOR EXTERIOR MOUNTED EQUIPMENT SHALL USE HOT DIPPED GALVANIZED STEEL HARDWARE. PROVIDE ZINC RICH PAINT APPLIED TO FIELD CUTS OF GALVANIZED STEEL SUPPORT TO MINIMIZE THE POTENTIAL FOR CORROSION PER THE RESPECTIVE STRUT SUPPORT MANUFACTURER'S RECOMMENDATIONS.

15. CONDUITS FOR ELECTRIC SERVICE ENTRANCE AND FEEDERS SHALL BE AS DETAILED HEREIN ON THE PLANS. WHERE GALVANIZED RIGID STEEL CONDUIT IS SPECIFIED IT SHALL HAVE THREADED FITTINGS. SET SCREW TYPE FITTINGS WILL NOT BE ACCEPTABLE. CONDUITS FOR UNDERGROUND APPLICATIONS SHALL BE AS DETAILED HEREIN. CONDUITS FOR GROUND ELECTRODE CONDUCTORS OR INDIVIDUAL GROUNDING CONDUCTORS SHALL BE SCHEDULE 40 OR SCHEDULE 80 PVC.

16. PROVIDE LIQUID TIGHT FLEXIBLE METAL CONDUIT AT CONNECTIONS TO EQUIPMENT SUBJECT TO VIBRATION OR WHERE FLEXIBILITY IS REQUIRED. LIQUID TIGHT FLEXIBLE METAL CONDUIT AND ASSOCIATED FITTINGS SHALL BE U.L. LISTED TO MEET THE REQUIREMENTS OF NEC 350.6, SUITABLE FOR GROUNDING, SUNLIGHT RESISTANT, AND RESISTANT TO OIL, GASOLINE, AND GREASE. LIQUID TIGHT FLEXIBLE METAL CONDUIT THAT IS USED FOR FLEXIBILITY (INCLUDING CONNECTIONS TO MOTORS, TRANSFORMERS, & CONSTANT CURRENT REGULATORS) SHALL REQUIRE AN EXTERNAL BONDING JUMPER OR INTERNAL EQUIPMENT GROUNDING CONDUCTOR PER NEC 350.60. DO NOT INSTALL LIQUID TIGHT FLEXIBLE METAL CONDUIT THAT IS NOT UL LISTED. CONFIRM LIQUID TIGHT FLEXIBLE METAL CONDUIT BEARS THE UL LABEL PRIOR TO INSTALLING.

17. UNLESS OTHERWISE SHOWN ALL EXPOSED CONDUITS SHALL BE RUN PARALLEL TO OR AT RIGHT ANGLES WITH THE LINES OF THE STRUCTURES.

18. ALL STEEL CONDUITS, FITTINGS, NUTS, BOLTS, ETC., SHALL BE GALVANIZED.

19. USE CONDUIT BUSHINGS AT EACH CONDUIT TERMINATIONS, WHERE NO. 4 AWG OR LARGER UNGROUND WIRE IS INSTALLED, USE INSULATED BUSHINGS.

20. USE DOUBLE LOCK NUTS AT EACH CONDUIT TERMINATION.

21. WRAP ALL PRIMARY AND SECONDARY POWER TRANSFORMER CONNECTIONS WITH SUFFICIENT LAYERS OF INSULATING TAPE (3M SCOTCH 23 ALL–VOLTAGE SPLICING TAPE, 3M SCOTCH 130C LINERLESS RUBBER SPLICING TAPE, OR APPROVED EQUAL) AND COVER WITH VINYL ELECTRICAL TAPE (3M SCOTCH 88 VINYL ELECTRICAL TAPE OR APPROVED EQUAL) FOR FULL VALUE OF CABLE INSULATION VOLTAGE.

22. UNLESS OTHERWISE NOTED, ALL INDOOR SINGLE CONDUCTOR CONTROL WIRING SHALL BE NO. 12 AWG. COPPER MINIMUM.

23. THE FOLLOWING SHALL APPLY TO CONTRACTOR–FURNISHED ENCLOSURES:

   A. ALL COMPONENTS SHALL BE MOUNTED IN DUST PROOF ENCLOSURE(S) WITH VERTICALLY HINGED COVERS.

   B. THE ENCLOSURE(S) SHALL HAVE AMPLE SPACE FOR THE CIRCUIT COMPONENTS, TERMINAL BLOCKS, AND INCOMING AND INTERNAL WIRING.

   C. ALL INCOMING/OUTGOING WIRING SHALL BE TERMINATED AT TERMINAL BLOCKS.

   D. EACH TERMINAL ON TERMINAL BLOCKS AND ON CIRCUIT COMPONENTS SHALL BE CLEARLY IDENTIFIED.

   E. ALL CONTROL CONDUCTOR TERMINATIONS SHALL BE OF THE OPEN–EYE CONNECTOR/SCREW TYPE. SOLDERED, CLOSED–EYE TERMINATIONS, OR TERMINATIONS WITHOUT CONNECTORS ARE NOT ACCEPTABLE.

   F. WHEN THE ENCLOSURE COVER IS OPENED, ALL CIRCUIT COMPONENTS, WIRING, AND TERMINALS SHALL BE EXPOSED AND ACCESSIBLE WITHOUT REMOVAL OF ANY PANELS, COVERS, ETC., EXCEPT THOSE COVERING HIGH VOLTAGE COMPONENTS.

   G. ACCESS TO, OR REMOVAL OF A CIRCUIT COMPONENT OR TERMINAL BLOCK WILL NOT REQUIRE THE REMOVAL OF ANY OTHER CIRCUIT COMPONENT OR TERMINAL BLOCK.

   H. EACH CIRCUIT COMPONENT SHALL BE CLEARLY IDENTIFIED INDICATING ITS CORRESPONDING NUMBER SHOWN ON THE DRAWINGS AND ITS FUNCTION.

   I. A COMPLETE WIRING DIAGRAM (NOT A SCHEMATIC DIAGRAM) SHALL BE MOUNTED ON THE INSIDE OF THE COVER. THE DIAGRAM SHALL REPRESENT EACH CONDUCTOR BY A SEPARATE LINE.

   J. THE DIAGRAM SHALL IDENTIFY EACH CIRCUIT COMPONENT AND NUMBERING AND COLOR OF EACH INTERNAL CONDUCTOR AND TERMINAL.

   K. ALL WIRING SHALL BE NEATLY TRAINED AND LACED.

   L. MINIMUM WIRE SIZE SHALL BE NO. 12 AWG. UNLESS OTHERWISE NOTED ON THE PLANS.

24. FURNISH & INSTALL A WEATHERPROOF WARNING LABEL FOR EACH METER SOCKET, SERVICE DISCONNECT, SAFETY SWITCH, CUTOUT, PANELBOARD, & CONTROL PANEL TO WARN PERSON OF POTENTIAL ELECTRIC ARC FLASH HAZARDS, PER THE REQUIREMENTS OF NEC 110.16 "FLASH PROTECTION".

AIRFIELD LIGHTING

1. UNLESS OTHERWISE NOTED, ALL UNDERGROUND AIRFIELD LIGHTING SERIES CIRCUIT CONDUCTORS WHETHER DEB OR IN DUCT/CONDUIT SHALL BE FAA APPROVED 5000 VOLT L–824 TYPE C. INSULATION VOLTAGE AND SIZE SHALL BE AS SPECIFIED.

2. NO COMPONENTS OF PRIMARY CIRCUIT SUCH AS CABLE, CONNECTORS AND TRANSFORMERS SHALL BE BROUGHT ABOVE GROUND AT EDGE LIGHTS, SIGNS, REIL, ETC.

3. THERE SHALL BE NO EXPOSED POWER/CONTROL CABLES BETWEEN THE POINT WHERE THEY LEAVE THE UNDERGROUND (DEB OR L–867 BASES) AND WHERE THEY ENTER THE EQUIPMENT (SUCH AS TAXIWAY SIGNS, PAPI, REIL, ETC.) ENCLOSURES. THESE CABLES SHALL BE ENCLOSED IN RIGID CONDUIT OR IN FLEXIBLE, WATERTIGHT CONDUIT WITH BREAKABLE COUPLING(S) AT THE GRADE OR THE HOUSING COVER, AS SHOWN IN APPLICABLE DETAILS.

4. THE JOINTS OF THE L–823 PRIMARY CONNECTORS SHALL BE WRAPPED WITH AT LEAST ONE LAYER OF RUBBER OR SYNTHETIC RUBBER TAPE AND ONE LAYER OF PLASTIC TAPE, ONE–HALF LAPPED, EXTENDING AT LEAST 1–1/2 INCHES ON EACH SIDE OF THE JOINT, AS SHOWN IN APPLICABLE DETAILS.

5. THE CABLE ENTRANCE INTO THE FIELD–ATTACHED L–823 CONNECTORS SHALL BE ENCLOSED BY HEAT–SHRINKABLE TUBING WITH CONTINUOUS INTERNAL ADHESIVE, AS SHOWN IN APPLICABLE DETAILS.

6. L–823 TYPE II, TWO–CONDUCTOR SECONDARY SHALL BE CLASS 'A' (FACTORY MOLDED)

7. THERE SHALL BE NO SPLICES IN THE SECONDARY CABLE(S) WITHIN THE STEMS OF A RUNWAY/TAXIWAY EDGE/THRESHOLD LIGHTING FIXTURE AND THE WIREWAYS LEADING TO TAXIWAY SIGNS AND PAPI/REIL EQUIPMENT.

8. ELECTRICAL INSULATING GREASE SHALL BE APPLIED WITHIN THE L–823, SECONDARY, TWO CONDUCTOR CONNECTORS TO PREVENT WATER ENTRANCE. THESE CONNECTORS SHALL NOT BE TAPED.

9. A SLACK OF THREE (3') FEET, MINIMUM, SHALL BE PROVIDED IN THE PRIMARY CABLE AT EACH TRANSFORMER/CONNECTOR TERMINATION. AT STAKE–MOUNTED LIGHTS, THE SLACK SHALL BE LOOSELY COILED IMMEDIATELY BELOW THE ISOLATION TRANSFORMER.

10. DIRECTION OF PRIMARY CABLES SHALL BE IDENTIFIED BY COLOR CODING AS FOLLOWS: WHEN FACING LIGHT WITH BACK OF PAVEMENT, CABLE TO THE LEFT IS CODED RED AND CABLE TO THE RIGHT IS CODED BLUE. THIS APPLIES TO STAKE MOUNTED LIGHTS AND BASE MOUNTED LIGHTS WHERE THE BASE HAS ONLY ONE ENTRANCE.

11. L–867 BASES SHALL BE SIZE B, 24" DEEP, CLASS I, UNLESS OTHERWISE NOTED.

12. BASE MOUNTED FRANGIBLE COUPLINGS SHALL NOT HAVE WEEP HOLES TO THE OUTSIDE. PLUGGED UP HOLES SHALL NOT BE ACCEPTABLE. IT SHALL BE A 1/4" DIAMETER, MINIMUM, OR EQUIVALENT OPENING FOR DRAINAGE FROM THE SPACE AROUND THE SECONDARY CONNECTOR INTO THE L–867 BASE.

13. THE ELEVATION OF THE FRANGIBLE COUPLING GROOVE SHALL NOT EXCEED 1–1/2" ABOVE THE EDGE OF THE COVER IN CASE OF BASE MOUNTED COUPLINGS, OR THE TOP OF THE STAKE IN CASE OF STAKE MOUNTED COUPLINGS.

14. WHERE THE FRANGIBLE COUPLING IS NOT AN INTEGRAL PART OF THE LIGHT FIXTURE STEM OR MOUNTING LEG, A BEAD OF SILICON SEAL SHALL BE APPLIED COMPLETELY AROUND LIGHT STEM OR WIREWAY AT FRANGIBLE COUPLING TO PROVIDE A WATERTIGHT SEAL.

15. PLASTIC LIGHTING FIXTURE COMPONENTS, SUCH AS LAMP HEADS, STEMS, FRANGIBLE COUPLINGS, BASE COVERS, BRACKETS, STAKES, SHALL NOT BE ACCEPTABLE.

16. THE TOLERANCE FOR THE HEIGHT OF RUNWAY/TAXIWAY EDGE LIGHTS SHALL BE: ±1 INCH. IN CASE OF STAKE MOUNTED LIGHTS, THE SPECIFIED LIGHTING FIXTURE HEIGHT SHALL BE MEASURED BETWEEN THE TOP OF THE STAKE AND THE TOP OF THE LENS. IN CASE OF BASE MOUNTED LIGHTS, THE SPECIFIED LIGHTING FIXTURE HEIGHT SHALL BE MEASURED BETWEEN THE TOP OF BASE FLANGE AND THE TOP OF THE LENS, THUS INCLUDING THE BASE COVER, THE FRANGIBLE COUPLING, THE STEM, THE LAMP HOUSING AND THE LENS.

17. THE TOLERANCE FOR THE LATERAL SPACING (LIGHT LANE TO RUNWAY/TAXIWAY CENTERLINE) OF RUNWAY/TAXIWAY EDGE LIGHT SHALL BE ±1 INCH. THIS ALSO APPLIES AT INTERSECTIONS TO LATERAL SPACING BETWEEN LIGHTS OF A RUNWAY/TAXIWAY AND THE INTERSECTING RUNWAY/TAXIWAY.

18. ENTRANCES INTO L–867 BASES SHALL HAVE CONDUIT TO INTERFACE TO L–867 BASE HUBS, AND SHALL BE PLUGGED FROM THE INSIDE WITH DUCT SEAL.

19. GALVANIZED/PAINTED EQUIPMENT/COMPONENT SURFACES SHALL NOT BE DAMAGED BY DRILLING, FILING, ETC. DRAIN HOLES IN METAL TRANSFORMER HOUSINGS SHALL BE MADE BEFORE GALVANIZING.

20. CABLE/SPLICE/DUCT MARKERS SHALL BE PRECAST CONCRETE OF THE SIZE SHOWN. LETTERS/NUMBERS/ARROWS FOR THE LEGEND TO BE IMPRESSED INTO THE TOPS OF THE MARKERS SHALL BE PRE–ASSEMBLED AND SECURED IN THE MOLD BEFORE THE CONCRETE IS POURED. LEGEND INSCRIBED BY HAND IN WET CONCRETE SHALL NOT BE ACCEPTABLE.

21. ALL UNDERGROUND CABLE RUNS SHALL BE IDENTIFIED BY CABLE MARKERS AT EACH CHANGE OF DIRECTION OF THE CABLE RUN. CABLE MARKERS SHALL BE INSTALLED ABOVE THE CABLE.

22. LOCATIONS OF ALL DEB UNDERGROUND CABLE SPLICE/CONNECTIONS, EXCEPT THOSE AT ISOLATION TRANSFORMERS, SHALL BE IDENTIFIED BY SPLICE MARKER. SPLICE MARKERS SHALL BE INSTALLED ABOVE THE CABLE.

23. THERE SHALL BE NO SPLICES BETWEEN THE ISOLATION TRANSFORMERS. L–823 CONNECTORS ARE ALLOWED AT TRANSFORMER CONNECTIONS ONLY, UNLESS OTHERWISE SHOWN.

24. APPLY AN OXIDE INHIBITING, ANTI–SEIZING COMPOUND TO ALL SCREWS, NUTS AND FRANGIBLE COUPLING THREADS.

25. CONCRETE USED FOR SLABS, FOOTINGS, BACKFILL AROUND TRANSFORMER HOUSINGS, MARKERS, ETC. SHALL BE 3500 PSI, AIR–ENTRAINED.

26. ALL POWER AND CONTROL CABLES IN MAN/HAND HOLES SHALL BE TAGGED. CABLE ID TAG TO BE ATTACHED AT BOTH ENDS TO THE CABLE BY THE USE OF UV RESISTANT PLASTIC STRAPS. MINIMUM OF TWO TAGS SHALL BE PROVIDED ON EACH CABLE IN A MAN/HAND HOLE–ONE AT THE CABLE ENTRANCE AND ONE AT THE CABLE EXIT.

27. THE LOCATION, SIZE AND TYPE OF MATERIAL OF EXISTING UNDERGROUND AND/OR ABOVEGROUND UTILITIES INDICATED ON THE PLANS IS NOT REPRESENTED AS BEING ACCURATE, SUFFICIENT OR COMPLETE. NEITHER THE OWNER NOR THE ENGINEER ASSUMES ANY RESPONSIBILITY WHATEVER IN RESPECT TO ACCURACY, COMPLETENESS, OR SUFFICIENCY OF THE INFORMATION. THERE IS NO GUARANTEE EITHER EXPRESSED OR IMPLIED, THAT THE LOCATION, SIZE AND TYPE OF MATERIAL OF EXISTING UNDERGROUND UTILITIES INDICATED ARE REPRESENTATIVE OF THOSE TO BE ENCOUNTERED IN THE CONSTRUCTION. IT SHALL BE THE CONTRACTOR'S RESPONSIBILITY TO DETERMINE THE ACTUAL LOCATION OF ALL SUCH FACILITIES, INCLUDING SERVICE CONNECTIONS TO UNDERGROUND UTILITIES. PRIOR TO CONSTRUCTION, THE CONTRACTOR SHALL NOTIFY THE UTILITY COMPANIES OF HIS OPERATIONAL PLANS AND SHALL OBTAIN FROM THE RESPECTIVE UTILITY COMPANIES DETAILED INFORMATION AND ASSISTANCE RELATIVE TO THE LOCATION OF THE LOCATION OF THEIR FACILITIES AND THE WORKING SCHEDULE OF THE COMPANIES FRO REMOVAL OR ADJUSTMENT WHERE REQUIRED. IN THE EVENT AN UNEXPECTED UTILITY INTERFERENCE IS ENCOUNTERED DURING CONSTRUCTION, THE CONTRACTOR SHALL IMMEDIATELY NOTIFY THE UTILITY COMPANY OF JURISDICTION. THE OWNER'S REPRESENTATIVE AND/OR THE RESIDENT ENGINEER SHALL ALSO BE IMMEDIATELY NOTIFIED. ANY DAMAGE TO SUCH MAINS AND SERVICES SHALL BE RESTORED TO SERVICE AT ONCE AND PAID FOR BY THE CONTRACTOR AT NO ADDITIONAL COST TO THE CONTRACT. ALL UTILITY CABLES AND LINES SHALL BE LOCATED BY THE RESPECTIVE UTILITY. ALSO CONTACT AIRPORT DIRECTOR/MANAGER AND AIRPORT PERSONNEL FOR ASSISTANCE IN LOCATING UNDERGROUND AIRPORT CABLES AND/OR UTILITIES. ALSO COORDINATE WORK WITH ALL ABOVE GROUND UTILITIES.

28. WHEN PREPARING CABLE FOR SPLICES, THE CONTRACTOR SHALL USE A CABLE STRIPPER/PENCLLIER WHENEVER CABLE CONNECTIONS ARE MADE.

GROUNDING

1. GROUND ALL NON–CURRENT–CARRYING METAL PARTS OF ELECTRICAL EQUIPMENT BY USING CONDUCTORS SIZED AND ROUTED PER NFPA 70 (NEC) 2008, ARTICLE 250.

2. ALL GROUND CONNECTIONS TO GROUND RODS, BUSSES, PANELS, ETC., SHALL BE MADE WITH PRESSURE TYPE SOLDERLESS LUGS AND GROUND CLAMPS. SOLDERED OR BOLT AND WASHER TYPE CONNECTIONS ARE NOT ACCEPTABLE. CLEAN ALL METAL SURFACES BEFORE MAKING GROUND CONNECTIONS. EXOTHERMIC WELDS ARE THE PREFERRED METHOD OF CONNECTION TO A GROUND ROD.

3. TOPS OF GROUND RODS SHALL BE 6 INCHES BELOW GRADE.

4. THE RESISTANCE TO GROUND OF THE VAULT GROUNDING SYSTEM WITH THE COMMERCIAL POWER LINE NEUTRAL DISCONNECTED SHALL NOT EXCEED 10 OHMS.

5. THE RESISTANCE TO GROUND OF THE COUNTERPOISE SYSTEM, OR AT ISOLATION LOCATIONS, SUCH AS AIRPORT BEACON SHALL NOT EXCEED 25 OHMS.

RS&H

RS&H, Inc.
13750 SAN PEDRO AVE, SUITE 300
SAN ANTONIO, TX 78232
(210) 224-2800 FAX (210) 545-3103
WWW.RSANDH.COM
REGISTERED FIRM NO: F-3401

SAN ANTONIO INTERNATIONAL AIRPORT
SAN ANTONIO, TEXAS

GA FIS TAXIWAY AND APRON IMPROVEMENTS

STATE OF TEXAS
CRAIG A. TWIBELL
114144
LICENSED PROFESSIONAL ENGINEER
7/25/14

REVISIONS

DATE ISSUED: JULY 2014
REVIEWED BY: CAT
DRAWN BY: RS
DESIGNED BY: RS

RS&H PROJECT NUMBER
223-3267-004

© 2014 RS&H, INC.

SHEET TITLE

ELECTRICAL NOTES

SHEET NUMBER

E001

ISSUED FOR BID
NOT FOR CONSTRUCTION

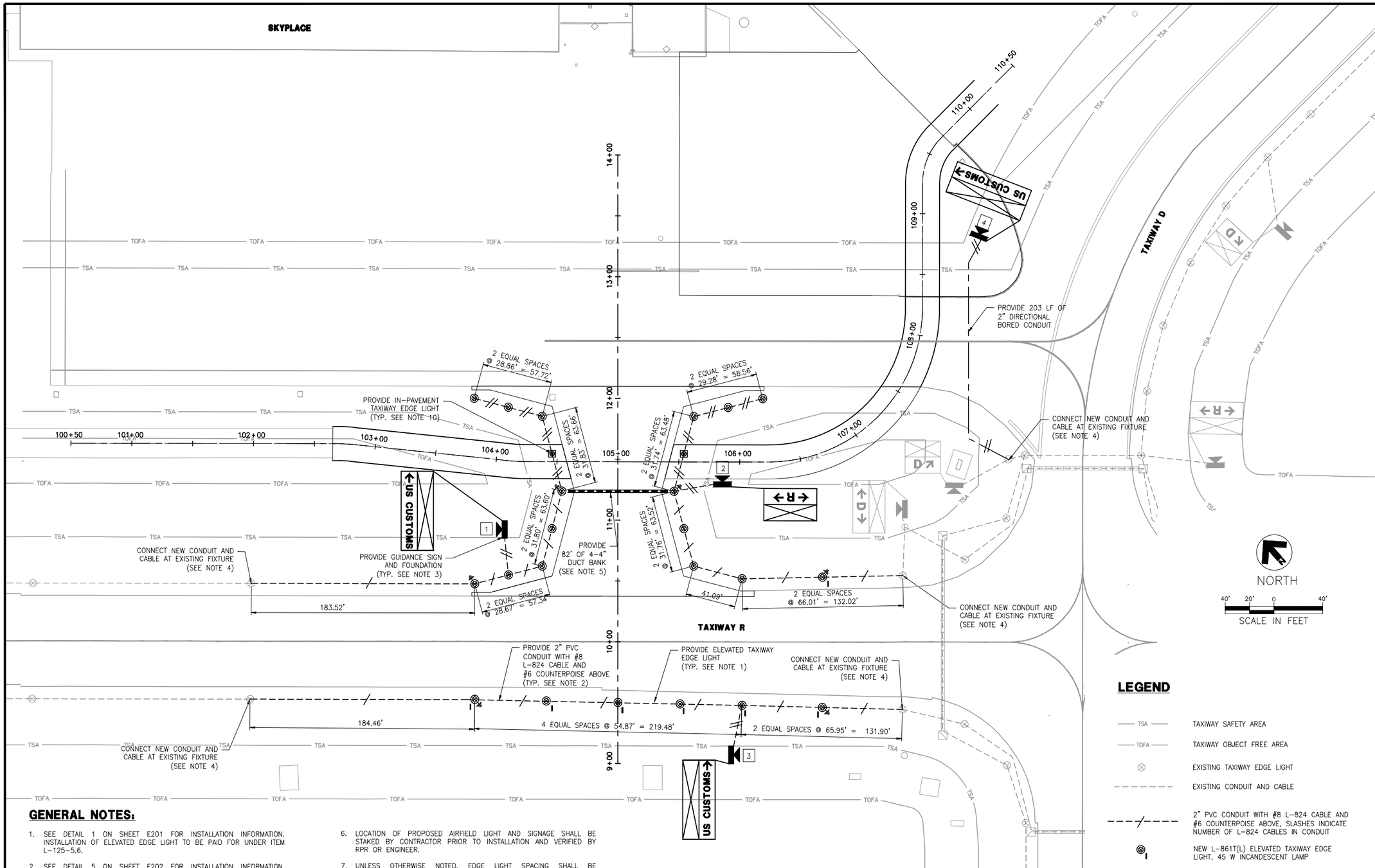

GENERAL NOTES:

1. SEE DETAIL 1 ON SHEET E201 FOR INSTALLATION INFORMATION. INSTALLATION OF ELEVATED EDGE LIGHT TO BE PAID FOR UNDER ITEM L-125-5.6.
2. SEE DETAIL 5 ON SHEET E202 FOR INSTALLATION INFORMATION. CONDUIT TO BE PAID UNDER ITEM L-110-5.1. CABLE TO BE PAID FOR UNDER ITEM L-108-5.1, COUNTERPOISE TO BE PAID FOR UNDER ITEM L-108-5.2.
3. SEE DETAILS ON SHEET E203 FOR INSTALLATION INFORMATION AND LOCATION. TO BE PAID UNDER ITEM L-125-5.3.
4. SPLICE PROPOSED CIRCUIT WITH EXISTING CIRCUIT AND CONNECT PROPOSED CONDUIT TO EXISTING LIGHT BASE. PROTECT EXISTING LIGHT BASE, EXISTING CONDUITS AND CIRCUITS.
5. NEW 4-WAY 4" CONCRETE ENCASED DUCT BANK WITH #8 5KV CABLE. CONCRETE ENCASED DUCT BANK TO BE PAID UNDER L-110-5.2. CABLE TO BE PAID UNDER ITEM L-108-5.1. COUNTERPOISE TO BE PAID FOR UNDER ITEM L-108-5.2.
6. LOCATION OF PROPOSED AIRFIELD LIGHT AND SIGNAGE SHALL BE STAKED BY CONTRACTOR PRIOR TO INSTALLATION AND VERIFIED BY RPR OR ENGINEER.
7. UNLESS OTHERWISE NOTED, EDGE LIGHT SPACING SHALL BE SYMMETRICAL ABOUT CENTERLINE AND ALIGNED WITH LIGHTS DIRECTLY ACROSS PAVEMENT PERPENDICULAR TO TAXIWAY CENTERLINE. ALL EDGE LIGHTS SHALL BE 10' FROM THEORETICAL PAVEMENT EDGE.
8. REFER TO CIVIL SHEETS FOR PAVEMENT LIMITS AND MARKINGS, SHEET C200 AND C700.
9. GROUND RODS AND TERMINATIONS ARE TO BE INCLUDED IN THE COST FOR THE COUNTERPOISE PAY ITEM.
10. SEE DETAIL 3 ON SHEET E201 FOR INSTALLATION INFORMATION.

LEGEND

TSA	TAXIWAY SAFETY AREA
TOFA	TAXIWAY OBJECT FREE AREA
	EXISTING TAXIWAY EDGE LIGHT
	EXISTING CONDUIT AND CABLE
	2" PVC CONDUIT WITH #8 L-824 CABLE AND #6 COUNTERPOISE ABOVE, SLASHES INDICATE NUMBER OF L-824 CABLES IN CONDUIT
	NEW L-861T(L) ELEVATED TAXIWAY EDGE LIGHT, 45 W INCANDESCENT LAMP
	NEW L-861T(L) ELEVATED TAXIWAY EDGE LIGHT
	NEW L-852T(L) IN-PAVEMENT TAXIWAY EDGE LIGHT
	3/4" DIA. X 10' GROUND ROD
3	NEW SINGLE FACE GUIDANCE SIGN ON NEW FOUNDATION. '3' INDICATES SIGN IDENTIFICATION NUMBER AS SHOWN
X-Y"	NEW CONCRETE ENCASED DUCT BANK, SIZE AND QUANTITY AS INDICATED. "X" INDICATES NUMBER OF DUCTS, "Y" INDICATES SIZE

RS&H

RS&H, Inc.
13750 SAN PEDRO AVE, SUITE 300
SAN ANTONIO, TX 78232
(210) 224-2800 FAX (210) 545-3103
WWW.RSANDH.COM
REGISTERED FIRM NO: F-3401

SAN ANTONIO INTERNATIONAL AIRPORT
SAN ANTONIO, TEXAS

GA FIS TAXIWAY AND APRON IMPROVEMENTS

STATE OF TEXAS
CRAIG A. TWIBELL
114144
LICENSED
PROFESSIONAL ENGINEER
7/25/14

REVISIONS

DATE ISSUED: JULY 2014
REVIEWED BY: CAT
DRAWN BY: RS
DESIGNED BY: RS

RS&H PROJECT NUMBER
223-3267-004

© 2014 RS&H, INC.

SHEET TITLE

LIGHTING AND SIGNAGE PLAN

SHEET NUMBER

E200

ISSUED FOR BID
NOT FOR CONSTRUCTION

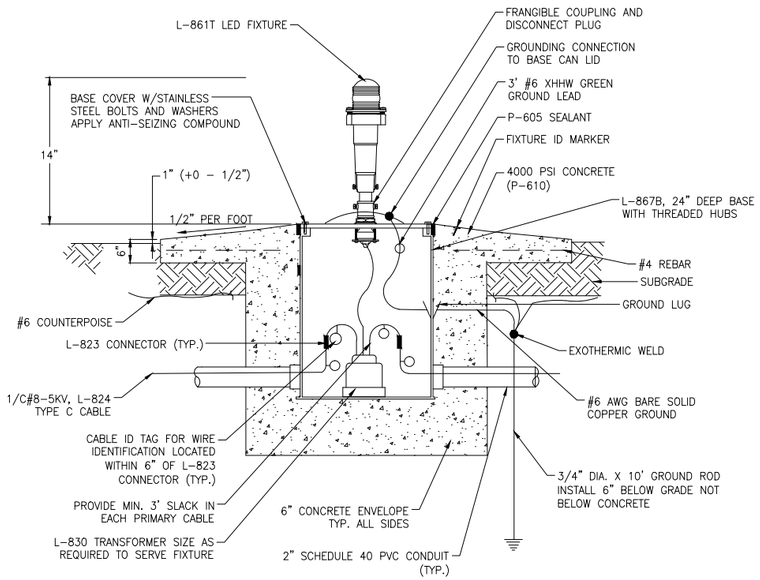

1 / E201 **ELEVATED TAXIWAY EDGE LIGHT DETAIL**

SCALE: NTS

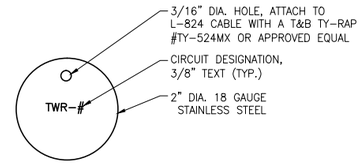

CABLE ID TAG NOTES:

1. ALL CABLES SHALL BE TAGGED IN EACH MANHOLE, HANDHOLE OR BASE CAN. EACH CABLE SHALL HAVE TWO TAGS, ONE NEAR EACH ENTRY. INSTALL TAG IMMEDIATELY AFTER CABLE IS PULLED.
2. CABLE CIRCUIT IDENTIFICATION: TWR - TAXIWAY R

2 / E201 **CABLE ID TAG DETAIL**

SCALE: NTS

GROUND ROD NOTES:

1. TYPE AND MINIMUM NUMBER OF GROUND RODS SHALL BE AS SPECIFIED ON THE PLAN.
2. INSTALL GROUND ROD AT MAXIMUM 500' SPACING. USE GROUND ROD TO TERMINATE THE COUNTERPOISE AT BOTH ENDS OF DUCT.
3. COST OF GROUND RODS IS INCIDENTAL TO THE ASSOCIATED ITEMS REQUIRING GROUNDING UNLESS OTHERWISE SPECIFIED.
4. RESISTANCE TO GROUND OF THE GROUNDING SYSTEM SHALL NOT EXCEED 25 OHMS.

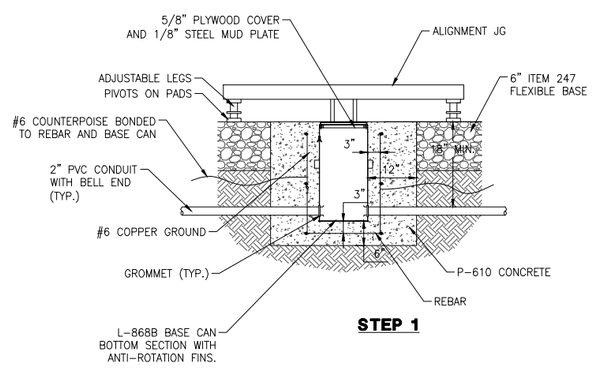

STEP 1

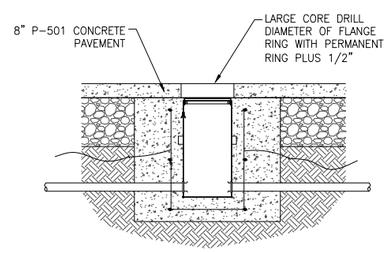

STEP 2

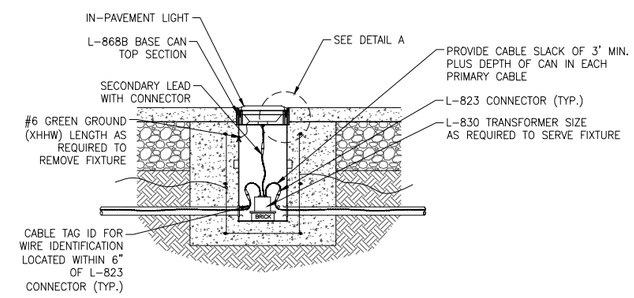

STEP 3

3 / E201 **IN-PAVEMENT LIGHT DETAIL**

SCALE: NTS

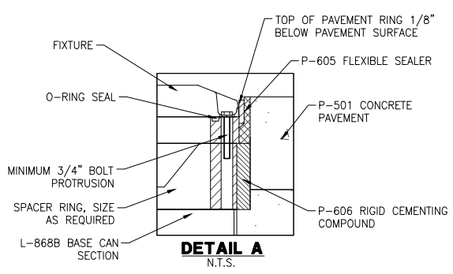

DETAIL A

N.T.S.

NOTES:

1. VIBRATE CONCRETE BACKFILL TO ENSURE THERE ARE NO VOIDS.
2. APPLY AN ANTI-SEIZING COMPOUND BEFORE TIGHTENING ALL BOLTS TO THE TORQUE SPECIFIED BY THE MANUFACTURER. ALL BOLTS SHALL BE STAINLESS STEEL.
3. ADJUST FLANGE RING SUCH THAT BOLT HOLES ARE LOCATED TO ALLOW FOR THE SEMI FLUSH LIGHT FIXTURE LIGHT BEAM CENTERLINE TO BE ON A LINE PARALLEL WITH THE CENTER LINE AT THE FIXTURE LOCATION.
4. TIGHTEN ALL BOLTS TO THE TORQUE SPECIFIED BY THE MANUFACTURERS. DO NOT REUSE SHIPPING BOLTS TO INSTALL FIXTURE COMPONENTS.
5. CONDUIT SHALL NOT EXTEND INTO LIGHT BASE MORE THAN 1-INCH.

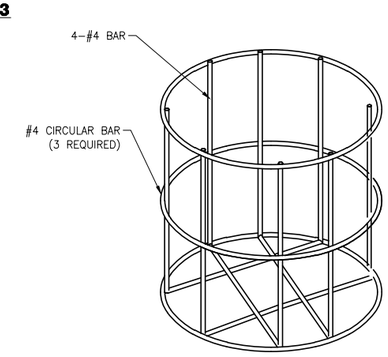

RS&H

RS&H, Inc.
13750 SAN PEDRO AVE, SUITE 300
SAN ANTONIO, TX 78232
(210) 224-2800 FAX (210) 545-3103
WWW.RSANDH.COM
REGISTERED FIRM NO: F-3401

SAN ANTONIO INTERNATIONAL AIRPORT
SAN ANTONIO, TEXAS

SAN ANTONIO INTERNATIONAL AIRPORT

GA FIS TAXIWAY AND APRON IMPROVEMENTS

STATE OF TEXAS
CRAIG A. TWIBELL
114144
LICENSED
PROFESSIONAL ENGINEER
7/25/14

REVISIONS

DATE ISSUED: JULY 2014
REVIEWED BY: CAT
DRAWN BY: RS
DESIGNED BY: RS

RS&H PROJECT NUMBER
223-3267-004

© 2014 RS&H, INC.

SHEET TITLE

TAXIWAY EDGE LIGHT DETAILS

SHEET NUMBER

E201

ISSUED FOR BID
NOT FOR CONSTRUCTION

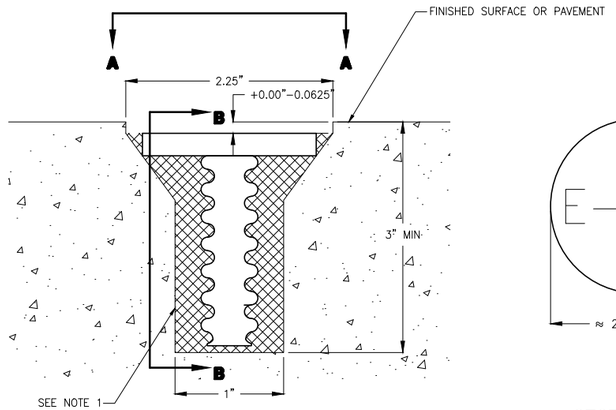

SECTION A-A
N.T.S.

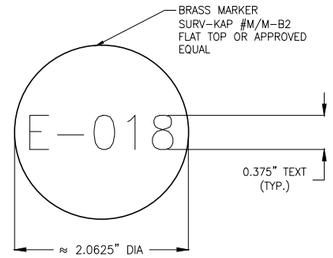

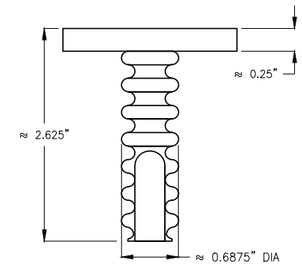

SECTION B-B
N.T.S.

1 / E202 ID MARKER DETAIL FOR LIGHT FIXTURE, MANHOLE, ETC.

SCALE: NTS

ID MARKER NOTES:

1. CLEAN HOLE WITH WIRE BRUSH AND DRY COMPRESSED AIR IMMEDIATELY PRIOR TO PLACING THE P-606. THE P-606 FILL TUBE SHALL BE KEPT WITHIN 1/8" OF THE BOTTOM OF THE DRILLED HOLE DURING FILLING TO PREVENT AIR ENTRAPMENT. INSTALL MARKER AND ROTATE 1/4 TURN. VOLUME OF P-606 USED SHALL BE SUFFICIENT TO ALLOW A SMALL AMOUNT TO SQUEEZE OUT EVENLY AROUND THE PERIMETER OF THE MARKER TOP. ANY OVER OR UNDER POURS SHALL BE CORRECTED IMMEDIATELY.
2. INSTALLATION OF ID MARKERS AND STAMPING OF ID'S ARE INCIDENTAL TO FIXTURE, DUCT, HANDHOLE/MANDHOLE, CABLE, ETC., PAY ITEMS.
3. THE P-606 SHALL BE COMPATIBLE WITH THE TYPE OF PAVEMENT AND ENVIRONMENT IN WHICH IT IS BEING USED. THE MARKER MAY BE PLACED IN WET CONCRETE AS IT IS BEING INSTALLED.

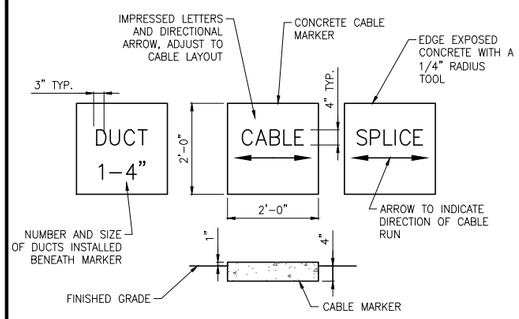

MARKER NOTES:

1. CABLE MARKERS SHALL BE PLACED AT CHANGES OF DIRECTION.
2. COST OF CONCRETE MARKERS IS INCIDENTAL TO THE ASSOCIATED ITEMS OF DUCT OR CABLE.
3. CONCRETE MARKERS SHALL HAVE LETTERS 4" HIGH, 3" WIDE WITH WIDTH OF STROKE 1/2" AND 1/4" DEEP. ALL LETTERS, NUMBERS AND ARROWS TO BE IMPRESSED.

2 / E202 CABLE AND DUCT MARKER DETAIL

SCALE: NTS

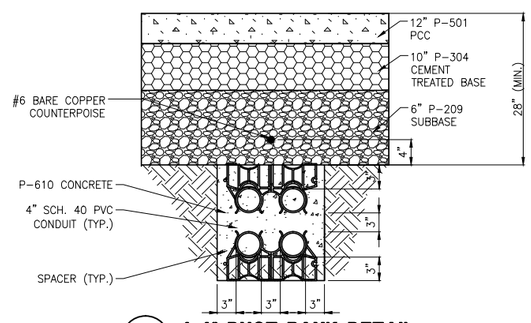

3 / E202 4-4" DUCT BANK DETAIL

SCALE: NTS

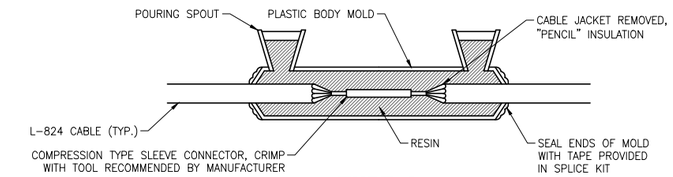

TYPE A
FOR SPLICES IN HOMERUNS AND FOR EXTENSIONS TO EXISTING CABLE ONLY

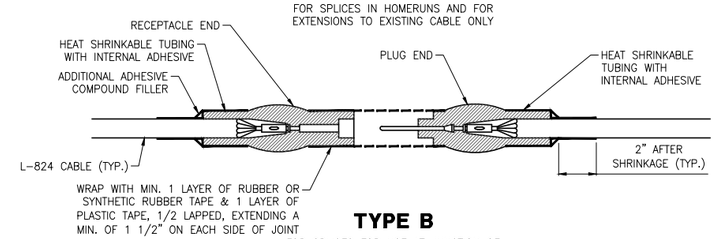

TYPE B
FOR SPLICES FOR USE AT JUNCTION OF HOMERUN W/ LOOP CIRCUIT

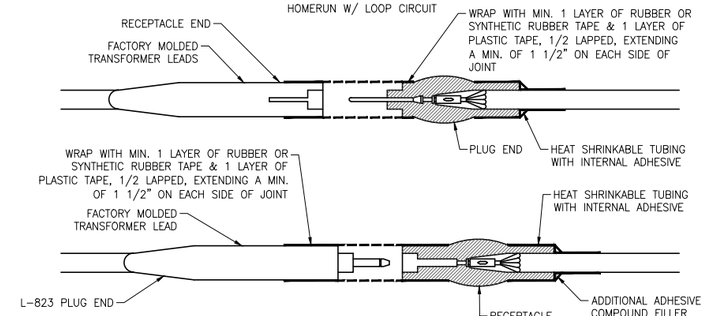

TYPE C
FOR SPLICES AT LIGHTS

CABLE SPLICE NOTES:

1. INSIDE DIAMETER OF CONNECTOR SHALL PROPERLY MATCH THE OUTSIDE DIAMETER OF CABLE.
2. CONNECTION OF CONDUCTORS MUST BE MADE BY USING CRIMP CONNECTORS AND A CRIMPING TOOL APPROVED BY THE CONNECTOR/LUG MANUFACTURER. THE TOOL MUST PRODUCE A COMPLETE CRIMP BEFORE IT CAN BE REMOVED. THE CRIMPING TOOL USED MUST BE LITSED BY THE L-823 KIT MANUFACTURER. MAKE THE NUMBER AND TYPE OF CRIMPS PER THE KIT MANUFACTURER'S INSTRUCTIONS.

4 / E202 CABLE SPLICE DETAIL

SCALE: NTS

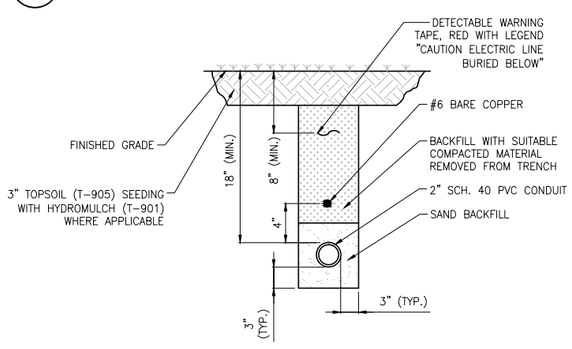

5 / E202 2" CONDUIT TRENCH DETAIL

SCALE: NTS

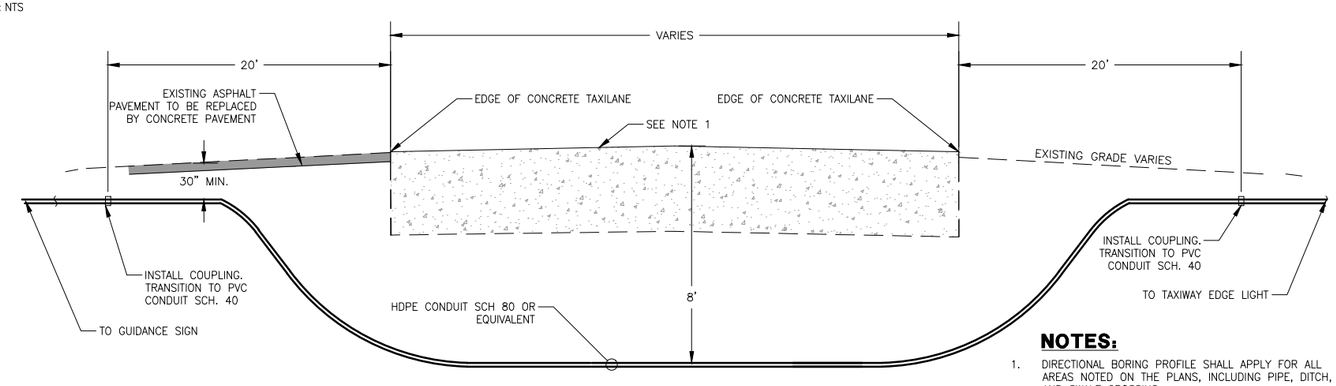

NOTES:

1. DIRECTIONAL BORING PROFILE SHALL APPLY FOR ALL AREAS NOTED ON THE PLANS, INCLUDING PIPE, DITCH, AND SWALE CROSSING.

6 / E202 DIRECTIONAL DRILLED CONDUIT DETAIL

SCALE: NTS

RS&H

RS&H, Inc.
13750 SAN PEDRO AVE, SUITE 300
SAN ANTONIO, TX 78232
(210) 224-2800 FAX (210) 545-3103
WWW.RSANDH.COM
REGISTERED FIRM NO: F-3401

SAN ANTONIO INTERNATIONAL AIRPORT
SAN ANTONIO, TEXAS

GA FIS TAXIWAY AND APRON IMPROVEMENTS

STATE OF TEXAS
CRAIG A. TWIBELL
114144
LICENSED PROFESSIONAL ENGINEER
7/25/14

REVISIONS

DATE ISSUED: JULY 2014
REVIEWED BY: CAT
DRAWN BY: RS
DESIGNED BY: CAT

RS&H PROJECT NUMBER
223-3267-004

© 2014 RS&H, INC.

SHEET TITLE

MISC. ELECTRICAL DETAILS

SHEET NUMBER

E202

ISSUED FOR BID
NOT FOR CONSTRUCTION

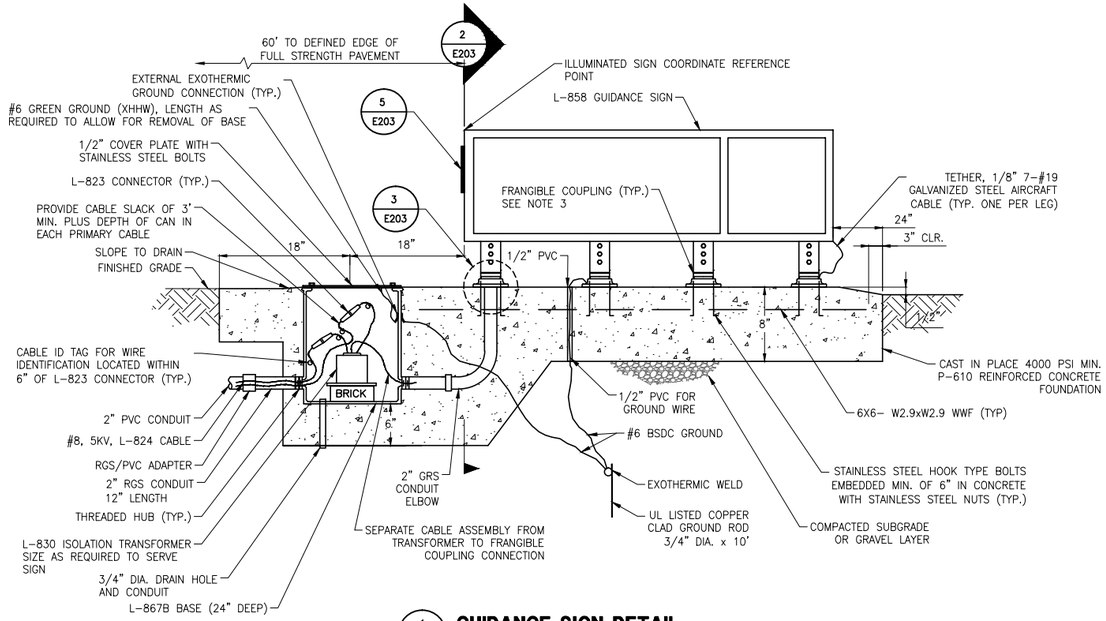

1 E203 **GUIDANCE SIGN DETAIL**
SCALE: NTS

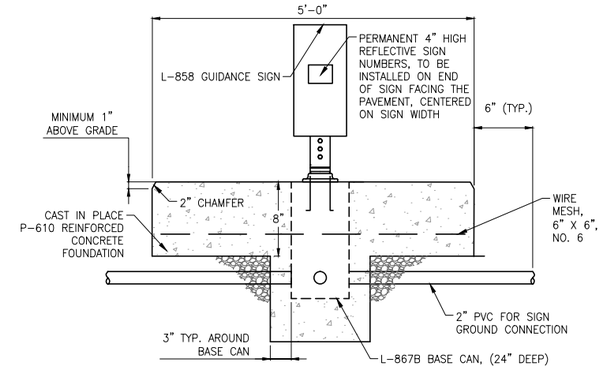

2 E203 **GUIDANCE SIGN - SIDE VIEW**
SCALE: NTS

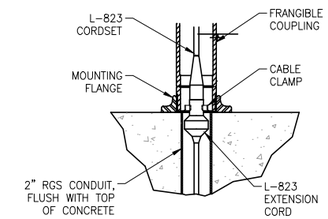

3 E203 **POWER LEG MOUNTING DETAIL**
SCALE: NTS

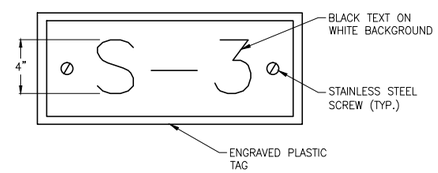

5 E203 **GUIDANCE SIGN ID TAG DETAIL**
SCALE: NTS

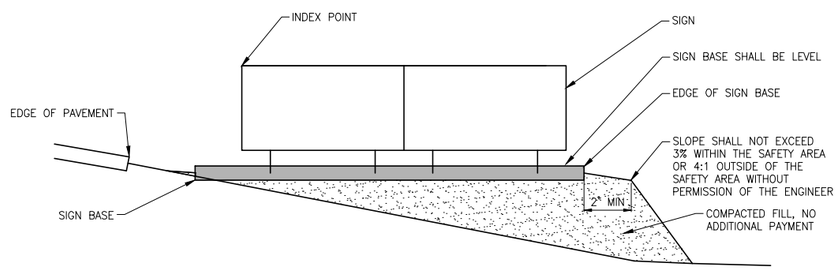

4 E203 **SIGN BASE GRADING AND FILL DETAIL**
SCALE: NTS

SIGN PANEL COLOR SCHEDULE

TYPE	COLOR SCHEDULE	SYMBOL
L-858	BLACK INSCRIPTION ON YELLOW BACKGROUND	← R →
L-858	BLACK INSCRIPTION ON YELLOW BACKGROUND	← US CUSTOMS

GUIDANCE SIGN SCHEDULE

SIGN NO.	SIZE	STYLE	CLASS	MODULE	LEGEND		CIRCUIT NO.	LOCATION	
					FRONT	BACK		NORTHING	EASTING
1	3	2	1	5	← US CUSTOMS	–	TWR	13744658.71	2137921.47
2	3	2	1	2	← R →	–	TWR	13744558.67	2138083.79
3	3	2	1	5	US CUSTOMS →	–	TWR	13744383.39	2137932.63
4	3	2	1	5	US CUSTOMS ↗	–	TWR	13744570.72	2138374.92

GUIDANCE SIGN NOTES:

1. DO NOT CONNECT COUNTERPOISE ABOVE CONDUIT LEADING TO SIGN TO THE BASE CAN. CONNECT COUNTERPOISE TO SEPARATE GROUND ROD.
2. THE CONTRACTOR SHALL BE RESPONSIBLE FOR SUPPLYING ALL GUIDANCE SIGNS, CABLE, CONDUITS, TRANSFORMERS, AND MISCELLANEOUS ITEMS REQUIRED FOR COMPLETE INSTALLATION OF THE SIGNS.
3. SIGNS SHALL BE ORIENTED SO THAT THE SIGN FACE IS PERPENDICULAR TO THE CENTERLINE OF THE TAXIWAY OR RUNWAY.
4. ALL DISTURBED AREAS SHALL BE TOPSOILED AND MULCH SEEDED. THESE QUANTITIES ARE CONSIDERED INCIDENTAL AND ARE TO BE INCLUDED IN THE CONTRACTOR'S GUIDANCE SIGN UNIT PRICE.
5. FOUNDATIONS AND BASE CANS ARE CONSIDERED INCIDENTAL AND ARE TO BE INCLUDED IN THE CONTRACTOR'S GUIDANCE SIGN UNIT PRICE.
6. CONTRACTOR SHALL PROVIDE GUIDANCE SIGNS WITH LED LAMPS.
7. THE DETAILS SHOWN ON THIS SHEET PROVIDE THE MINIMUM REQUIREMENTS FOR SIGNS. THE CONTRACTOR SHALL USE STANDARDS APPLICABLE FOR THE PARTICULAR SIGN MANUFACTURER IF MORE STRINGENT.
8. PRIOR TO ORDERING SIGN ID TAG, COORDINATE WITH THE OWNER FOR THE EXACT DESIGNATION OF EACH SIGN.
9. SIGNS SHALL BE SET 1" MAX ABOVE FINISH GRADE. CONTRACTOR SHALL GRADE AROUND SIGNS AS REQUIRED TO PREVENT SILT/DIRT INFILTRATION AND MAINTAINING THE 1" MAX ELEVATION ABOVE FINISH GRADE. NO SEPARATE PAYMENT SHALL BE MADE.
10. VERIFY GUIDANCE SIGN ID NUMBER WITH AIRPORT PRIOR TO MANUFACTURING ID TAG.

RS&H

RS&H, Inc.
13750 SAN PEDRO AVE, SUITE 300
SAN ANTONIO, TX 78232
(210) 224-2800 FAX (210) 545-3103
WWW.RSANDH.COM
REGISTERED FIRM NO: F-3401

SAN ANTONIO INTERNATIONAL AIRPORT
SAN ANTONIO, TEXAS

GA FIS TAXIWAY AND APRON IMPROVEMENTS

STATE OF TEXAS
CRAIG A. TWIBELL
114144
LICENSED PROFESSIONAL ENGINEER
7/25/14

REVISIONS

DATE ISSUED: JULY 2014
REVIEWED BY: CAT
DRAWN BY: RS
DESIGNED BY: RS

RS&H PROJECT NUMBER
223-3267-004

© 2014 RS&H, INC.

SHEET TITLE

TAXIWAY GUIDANCE SIGN DETAILS AND SCHEDULE

SHEET NUMBER

E203

ISSUED FOR BID
NOT FOR CONSTRUCTION