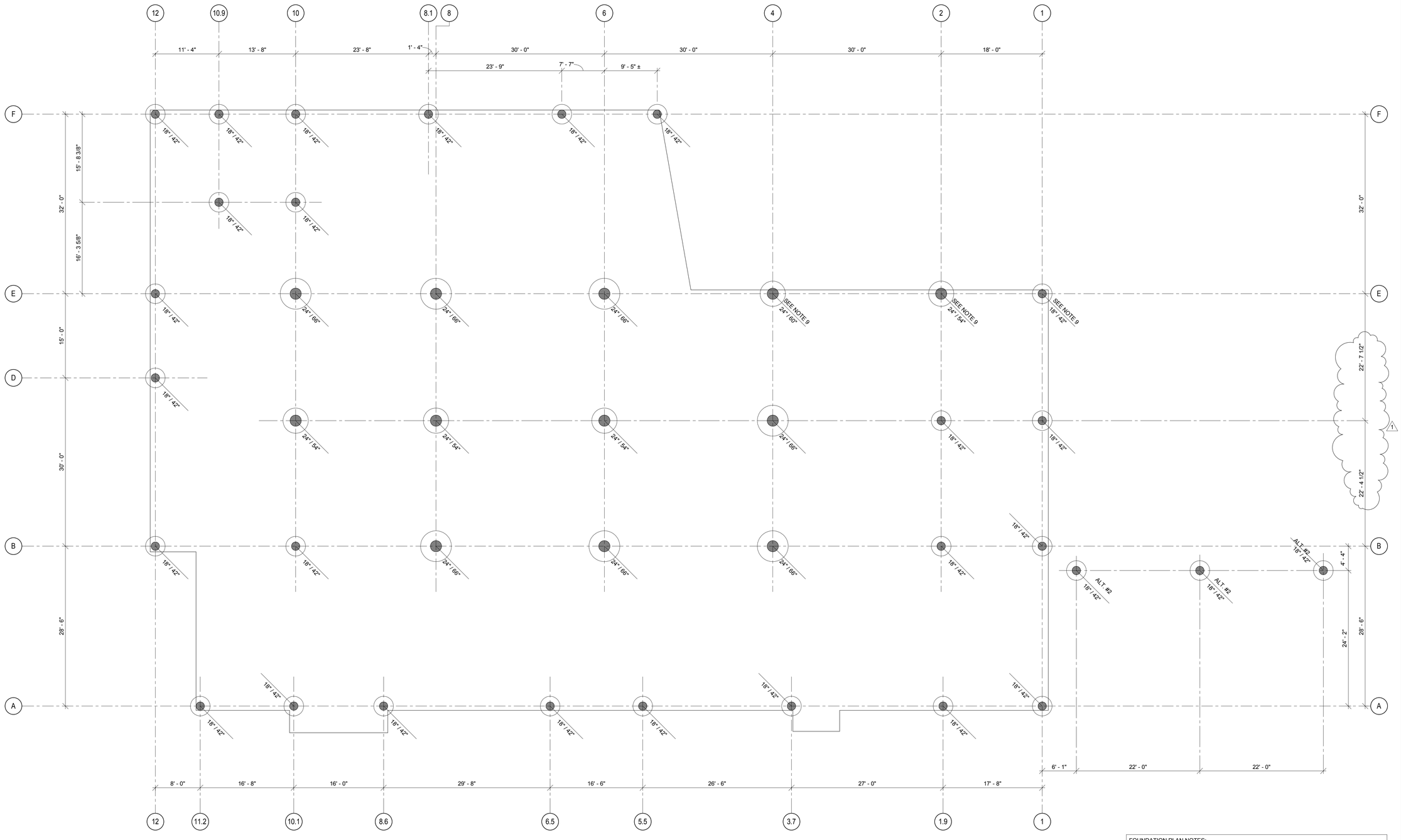

LEGEND:

NOTES
18"/36"

SCHEDULED SHAFT/BELL DIAMETER
SEE DETAIL 1 / S4.2 FOR ADD'L INFO

FOUNDATION PLAN NOTES:

1. REF. ARCH'L/MEP FOR FLOOR DRAINS AND SLAB SLOPES TO DRAINS.
2. REF. ARCH'L FOR TOOLED JOINTS AT ALL EXTERIOR SLABS.
3. SEE SHEET S7.1 FOR CONCRETE BEAM SCHEDULE.
4. SAW CUT TOPPING SLAB PER DETAI4 / SOGT TYPICAL
5. SEE DETAIL 3 / SOGT FOR TYPICAL GRADE BEAM AND REINFORCING REQUIREMENTS AT PLUMBING PENETRATIONS THROUGH GRADE BEAMS.
6. — — — — - DENOTES BRACING, REF. ELEVATION VIEW AS NOTED ON PLAN.
7. SEE DETAIL 1 / S4.2 FOR TYPICAL DRILLED PIER DETAIL.
8. PIER WAS DESIGNED FOR ADDITIONAL 75 KIPS FOR FUTURE EXPANSION.

LPA
t. 210.829.1730
e. lpa@lpainc.com
p. 210.829.1737
w. oculpa.com
114 East Cevallos Street
San Antonio, Texas 78204

Alpha Consulting Engineers F-1010
10/17/2014
STATE OF TEXAS
THOMAS C. HAMER
114739
LICENSED
PROFESSIONAL ENGINEER

ALPHA
Consulting Engineers, Inc.
STRUCTURAL ENGINEERS
13300 OLD BLANCO RD, SUITE 326
SAN ANTONIO, TEXAS 78216
TEL: (210) 227-3647
www.alphaconsultingengineers.com

DISTRICT 2 BRANCH LIBRARY

U.S. HWY 87, SAN ANTONIO, TEXAS 78222

Developed for
CITY OF SAN ANTONIO

This and all other project documents and all ideas, designs, arrangements and plans indicated or represented by these documents, are the property of LPA, Inc. (LPA) and cannot be used for any purpose or project except by written agreement with LPA and Client. LPA's design plans furnished hereunder are prepared for use only in connection with the project intended as not only existing but astronomically prone at the time of preparation of the plans and specifications. LPA and LPA's Consultants in the maximum legal extent shall not be responsible for any deficiencies between project density or indirectly from project document misuse.

Project documents describe design intent of work and are not a guarantee of existing conditions. Client, LPA and LPA's Consultants make no representations or warranties as to the accuracy or completeness of the project documents or their fitness for any particular purpose or application, nor are they responsible for any deficiencies between project density or indirectly from project document misuse.

© Copyright 2014

Revision		Date
1	Addendum #01	11/07/2014

Submittal	Date

Job. No.	132231
Date	09-08-14
Checked by	TCH
Scale	As indicated

PIER PLAN

S2.1

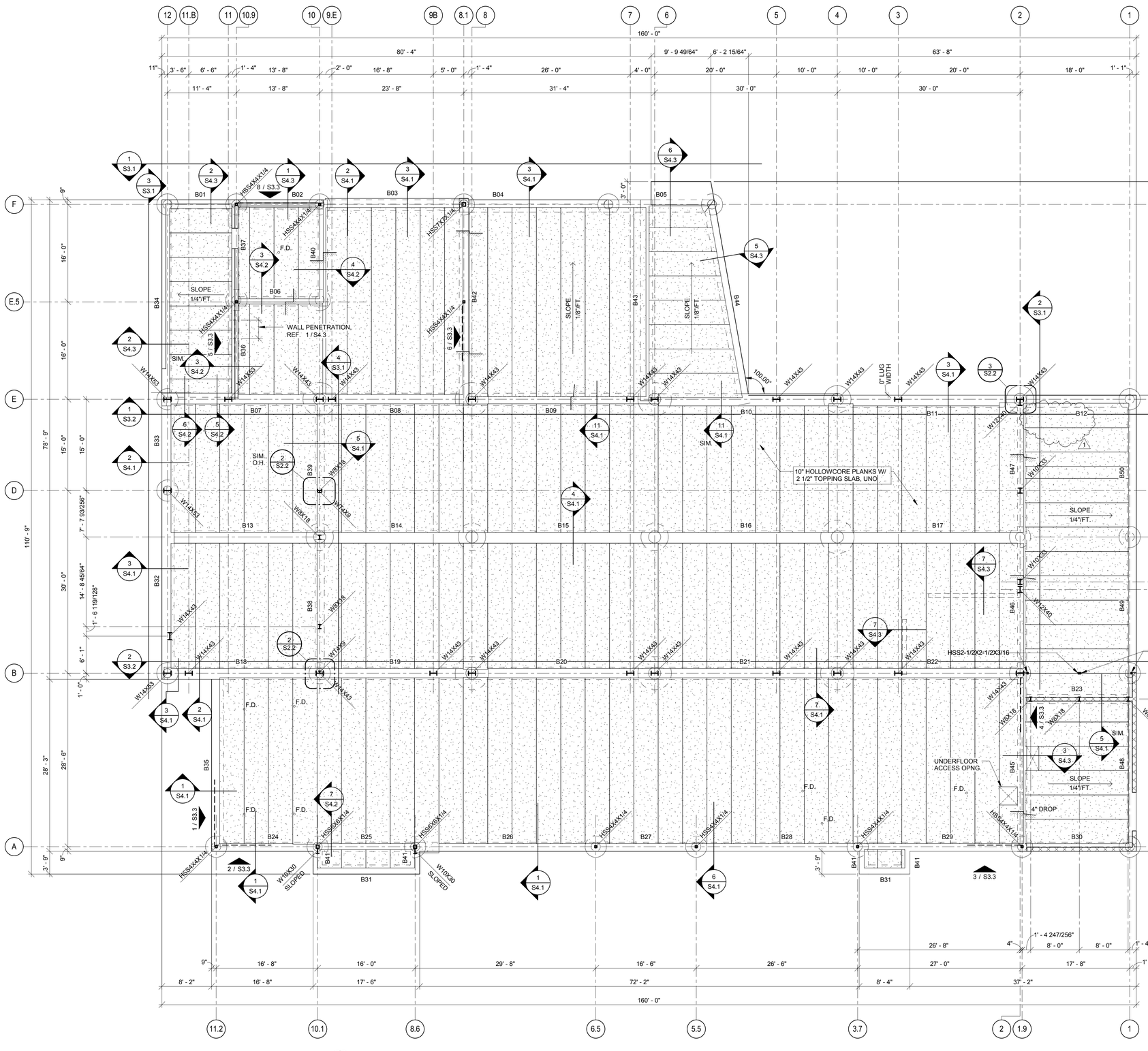

1 FOUNDATION FRAMING PLAN - BASE BID
SCALE : 1/8" = 1'-0"

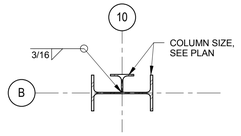

NOTE:
1. SEE SPEC'S FOR WELD FINISH. WELD IS EXPOSED.
2. WELD TO BE CONTINOUS

2 DETAIL PLAN
SCALE : 3/4" = 1'-0"

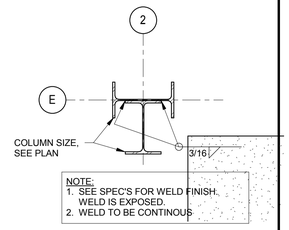

NOTE:
1. SEE SPEC'S FOR WELD FINISH. WELD IS EXPOSED.
2. WELD TO BE CONTINOUS

3 DETAIL PLAN
SCALE : 3/4" = 1'-0"

FOUNDATION PLAN NOTES:

1. REF. ARCHL/MEP FOR FLOOR DRAINS AND SLAB SLOPES TO DRAINS.
2. REF. ARCHL FOR TOOLED JOINTS AT ALL EXTERIOR SLABS.
3. SEE SHEET S7.1 FOR CONCRETE BEAM SCHEDULE.
4. SAW CUT TOPPING SLAB PER DETAI/4 / SOGT TYPICAL
5. SEE DETAIL 3 / SOGT FOR TYPICAL GRADE BEAM AND REINFORCING REQUIREMENTS AT PLUMBING PENETRATIONS THROUGH GRADE BEAMS.
6. - - - - - DENOTES BRACING, REF. ELEVATION VIEW AS NOTED ON PLAN.
7. SEE DETAIL 1 / S4.2 FOR TYPICAL DRILLED PIER DETAIL.
8. PIER WAS DESIGNED FOR ADDITIONAL 75 KIPS FOR FUTURE EXPANSION.

LPA
t. 210.829.1730
e. lpa@lpainc.com
p. 210.829.1737
w. oculpa.com
114 East Cevallos Street
San Antonio, Texas 78204

Alpha Consulting Engineers F-1010
10/17/2014
STATE OF TEXAS
THOMAS C. HAMER
114739
LICENSED
PROFESSIONAL ENGINEER

ALPHA
Consulting Engineers, Inc.
STRUCTURAL ENGINEERS
13300 OLD BLANCO RD, SUITE 326
SAN ANTONIO, TEXAS 78216
TEL: (210) 227-3647
www.alphaconsultingengineers.com

DISTRICT 2 BRANCH LIBRARY

U.S. HWY 87, SAN ANTONIO, TEXAS 78222

Developed for CITY OF SAN ANTONIO

This and all other project documents and all ideas, designs, arrangements, and plans indicated, represented, or embodied in any of these documents, whether or not patented or patentable, are the property of LPA, Inc. ("LPA") and subsidiaries and affiliates, and shall not be used by any person except by express written agreement with LPA and Client. LPA hereby grants limited rights (but only those rights that are expressly stated herein) to Client (or recipient, if not Client) to use the documents, but only upon full performance by Client of its obligations to LPA and LPA's Consultants to the maximum legal extent permitted by applicable law. Client (or recipient, if not Client) and LPA's Consultants shall be third party beneficiaries of the preceding sentence, with the right of direct enforcement against Client (or recipient, if not Client).

Project documents describe design intent of work and are not intended to be construction means, methods, techniques, sequences or procedures. LPA and LPA's Consultants make no representations or warranties regarding the documents and are not responsible for any discrepancies between project documents and existing conditions.

© Copyright 2014

Revision		Date
1	Addendum #01	11/07/2014

Submittal	Date

Job. No.	132231
Date	09-08-14
Checked by	TCH
Scale	As indicated

FOUNDATION FRAMING PLAN - BASE BID

S2.2

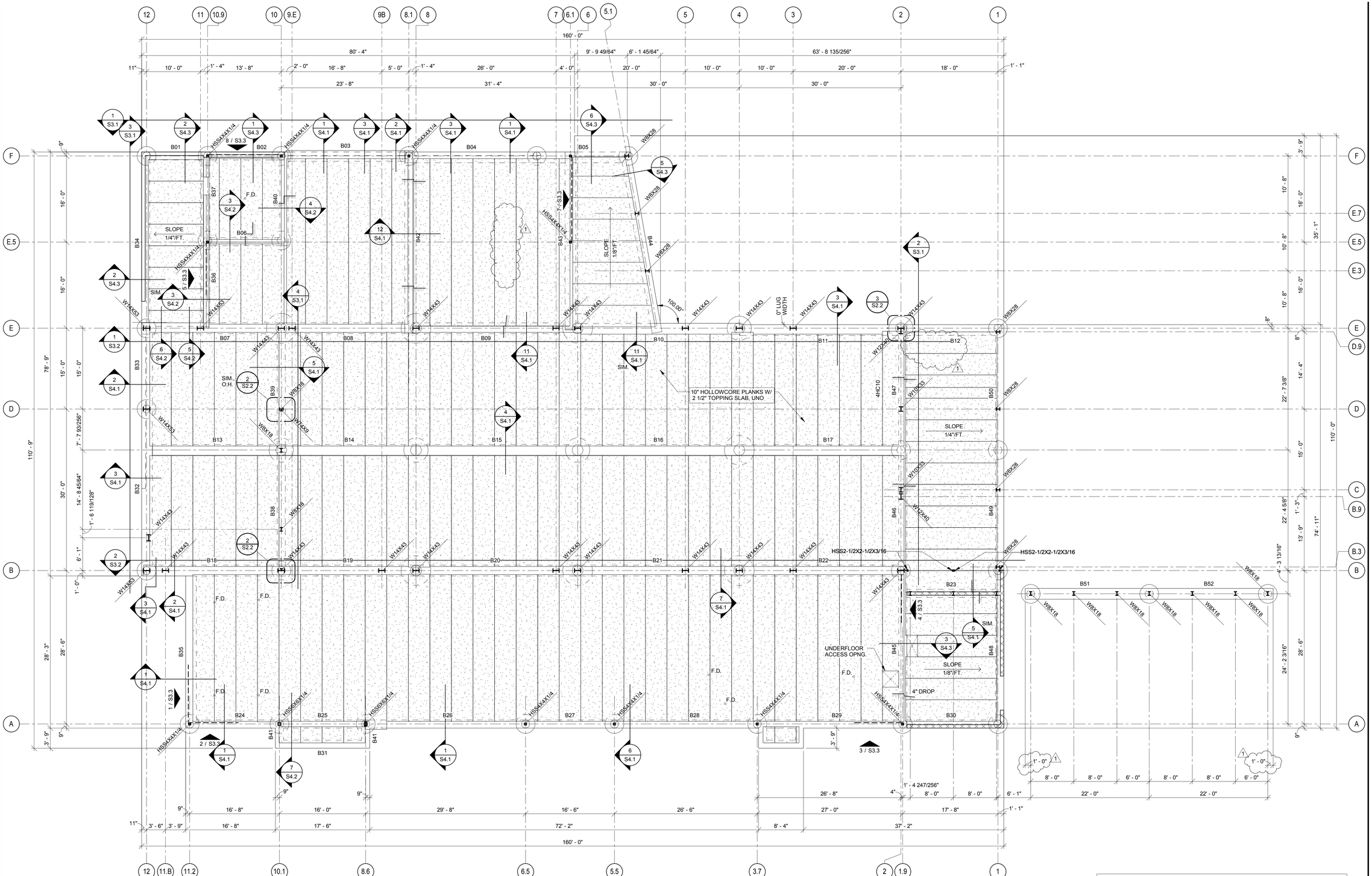

1 FOUNDATION FRAMING PLAN - ALTERNATES

SCALE : 1/8" = 1'-0"

FOUNDATION PLAN NOTES:

1. REF. ARCH'L/MEP FOR FLOOR DRAINS AND SLAB SLOPES TO DRAINS.
2. REF. ARCH'L FOR TOOLED JOINTS AT ALL EXTERIOR SLABS.
3. SEE SHEET S7.1 FOR CONCRETE BEAM SCHEDULE.
4. SAW CUT TOPPING SLAB PER DETAI4 / SOGT TYPICAL
5. SEE DETAIL 3 / SOGT FOR TYPICAL GRADE BEAM AND REINFORCING REQUIREMENTS AT PLUMBING PENETRATIONS THROUGH GRADE BEAMS.
6. ▬▬▬▬ - DENOTES BRACING, REF. ELEVATION VIEW AS NOTED ON PLAN.
7. SEE DETAIL 1 / S4.2 FOR TYPICAL DRILLED PIER DETAIL.
8. PIER WAS DESIGNED FOR ADDITIONAL 75 KIPS FOR FUTURE EXPANSION.

LPA
t. 210.829.1730
e. lpa@lpainc.com
p. 210.829.1737
w. oculpa.com
114 East Cevallos Street
San Antonio, Texas 78204

Alpha Consulting Engineers F-1010
10/17/2014
STATE OF TEXAS
THOMAS C. HAMER
114739
LICENSED
PROFESSIONAL ENGINEER

ALPHA
Consulting Engineers, Inc.
STRUCTURAL ENGINEERS
13300 OLD BLANCO RD, SUITE 326
SAN ANTONIO, TEXAS 78216
TEL: (210) 227-3647
www.alphaconsultingengineers.com

DISTRICT 2 BRANCH LIBRARY

U.S. HWY 87, SAN ANTONIO, TEXAS 78222

Developed for CITY OF SAN ANTONIO

This and all other project documents and all ideas, designs, arrangements, and plans indicated or represented by these documents, are the property of LPA, Inc. ("LPA") and cannot be used for any purpose not agreed to in writing by LPA and Client. LPA hereby gives formal notice that any such unauthorized use is strictly prohibited. Use (including but not only unauthorized reproduction or transmittal) by and/or on behalf of any person or entity other than LPA and Client. LPA hereby gives formal notice that any such unauthorized use is strictly prohibited. Use (including but not only unauthorized reproduction or transmittal) by and/or on behalf of any person or entity other than LPA and LPA's Consultants for the purposes illegal or not expressly permitted by written agreement between LPA and Client is strictly prohibited. LPA shall not be responsible for any modifications to these documents made by anyone other than LPA, or for any reuse of these documents for other projects, or for any other use or reuse of these documents by anyone other than LPA and LPA's Consultants under any circumstances.

Project documents describe design intent of work and are not to be used for construction purposes without the seal and LPA's Consultants' seals on approved shop drawings, specifications, addenda, and change orders. LPA and LPA's Consultants are not responsible for any discrepancies between project documents and contractor's working drawings.

© Copyright 2014

Revision	Date
1 Addendum #01	11/07/2014

Submittal	Date

Job. No.	132231
Date	09-08-14
Checked by	TCH
Scale	As indicated

FOUNDATION FRAMING PLAN - ALTERNATES

S2.2A

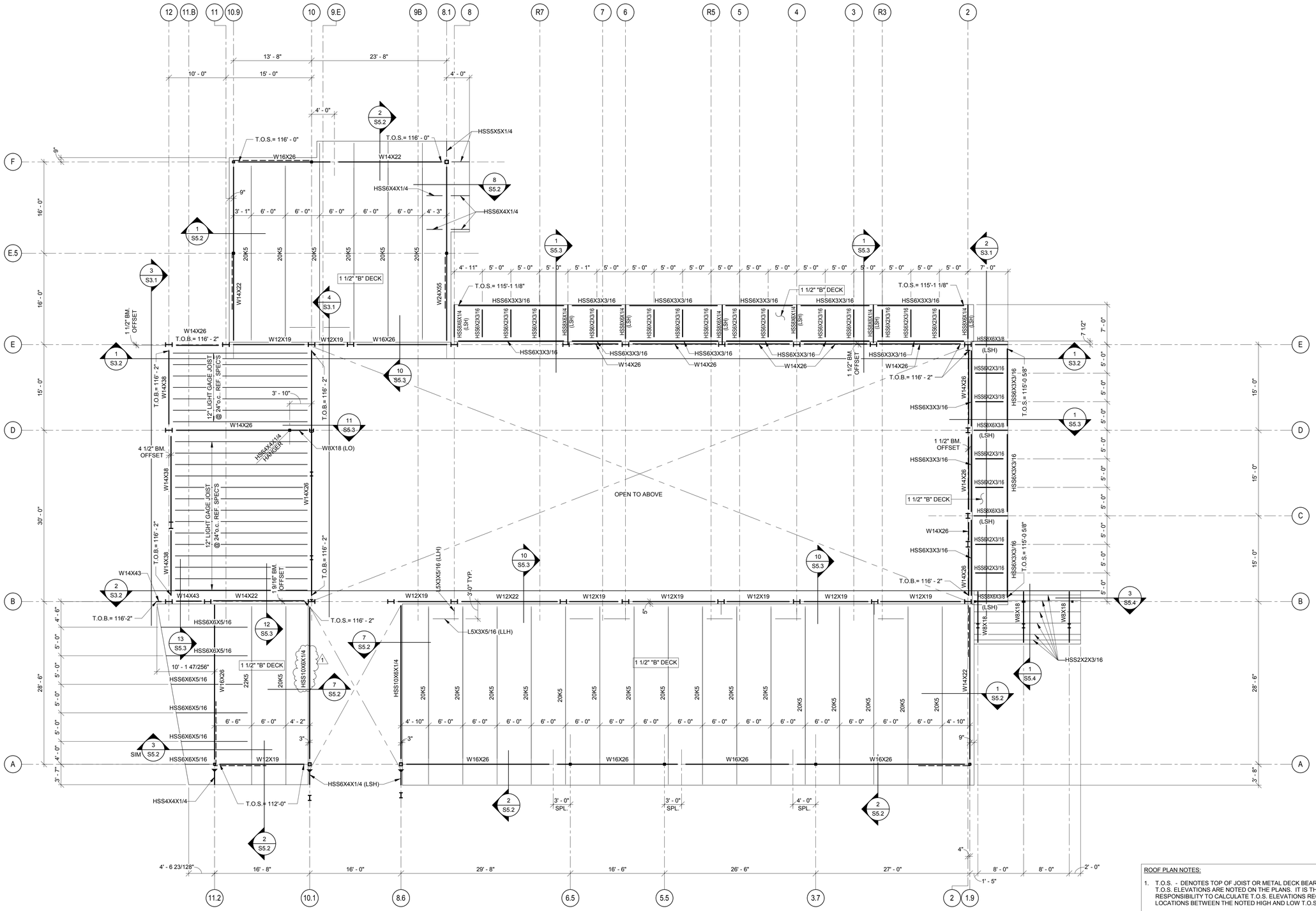

1 LOW ROOF FRAMING PLAN - BASE BID

SCALE : 1/8" = 1'-0"

PRICING NOTE:
PROVIDE AN ADDITIONAL 1.3 TONS OF WIDE FLANGES TO SUPPORT ARCHITECTURAL FINISHES.

ROOF PLAN NOTES:

1. T.O.S. - DENOTES TOP OF JOIST OR METAL DECK BEARING ELEVATION. HIGH AND LOW T.O.S. ELEVATIONS ARE NOTED ON THE PLANS. IT IS THE CONTRACTOR'S RESPONSIBILITY TO CALCULATE T.O.S. ELEVATIONS REQUIRED AT INTERMEDIATE LOCATIONS BETWEEN THE NOTED HIGH AND LOW T.O.S. ELEVATIONS.
2. CASTELLATED BEAMS ARE BASE BID ALT. #3 REPLACE CB24x31 W/ W24x55
3. "SPL" - DENOTES BEAM SPLICE LOCATION, SEE DETAIL 6 / S5.1
4. SEE DETAIL 8 / S5.1 FOR TYPICAL BEAM TO COLUMN CONNECTION.
5. SEE DETAIL 9 / S5.1 FOR TYPICAL WF TO WF BEAM CONNECTION.
6. "SP" DESIGNATION ON JOISTS DENOTES LOADING. SEE PLAN FOR ADDITIONAL CONCENTRATED LOAD. (TYP. UNIFORM LOAD = 20 PSF DL + 20 PSF LL)
7. ★ - DENOTES REQUIRED BOTTOM FLANGE BRACE, SEE DETAIL 7 / S5.1
8. ▶——— - DENOTES FULL MOMENT CAPACITY BEAM TO COLUMN CONNECTION,
9. – – – – - DENOTES BRACING, REF. ELEVATION VIEW AS NOTED ON PLAN.
10. T.O.W. - DENOTES TOP OF WALL ELEVATION.

LPA
t. 210.829.1730
e. lpa@lpainc.com
p. 210.829.1737
w. oculpa.com
114 East Cevallos Street
San Antonio, Texas 78204

Alpha Consulting Engineers F-1010
10/17/2014
STATE OF TEXAS
THOMAS C. HAMER
114739
LICENSED
PROFESSIONAL ENGINEER

ALPHA
Consulting Engineers, Inc.
STRUCTURAL ENGINEERS
13300 OLD BLANCO RD, SUITE 326
SAN ANTONIO, TEXAS 78216
TEL: (210) 227-3647
www.alphaconsultingengineers.com

DISTRICT 2 BRANCH LIBRARY

U.S. HWY 87, SAN ANTONIO, TEXAS 78222

Developed for CITY OF SAN ANTONIO

This and all other project documents and all ideas, sketches, and designs, incorporated herein, are the property of LPA and shall remain the property of LPA. Any reproduction, in whole or in part, of any of the foregoing is prohibited without the written consent of LPA and Client. LPA hereby grants limited license that any prospective bidder may, upon request, view the documents pertinent to not only bidding, but applicable bids all LPA and LPA's Consultants to this maximum legal extent of LPA's and LPA's Consultants's liability, and that any other person or entity may not rely on the foregoing directly or indirectly from project document review.

Project documents describe design intent of work and are not to be used as construction documents. Client and LPA and LPA's Consultants make no representation or warranty of any kind to any person or entity, and are not responsible for any discrepancies between project documents and existing conditions.

© Copyright 2014

Revision	Date
1 Addendum #01	11/07/2014

Submittal	Date

Job. No.	132231
Date	09-08-14
Checked by	TCH
Scale	As indicated

LOW ROOF FRAMING PLAN - BASE BID

S2.3

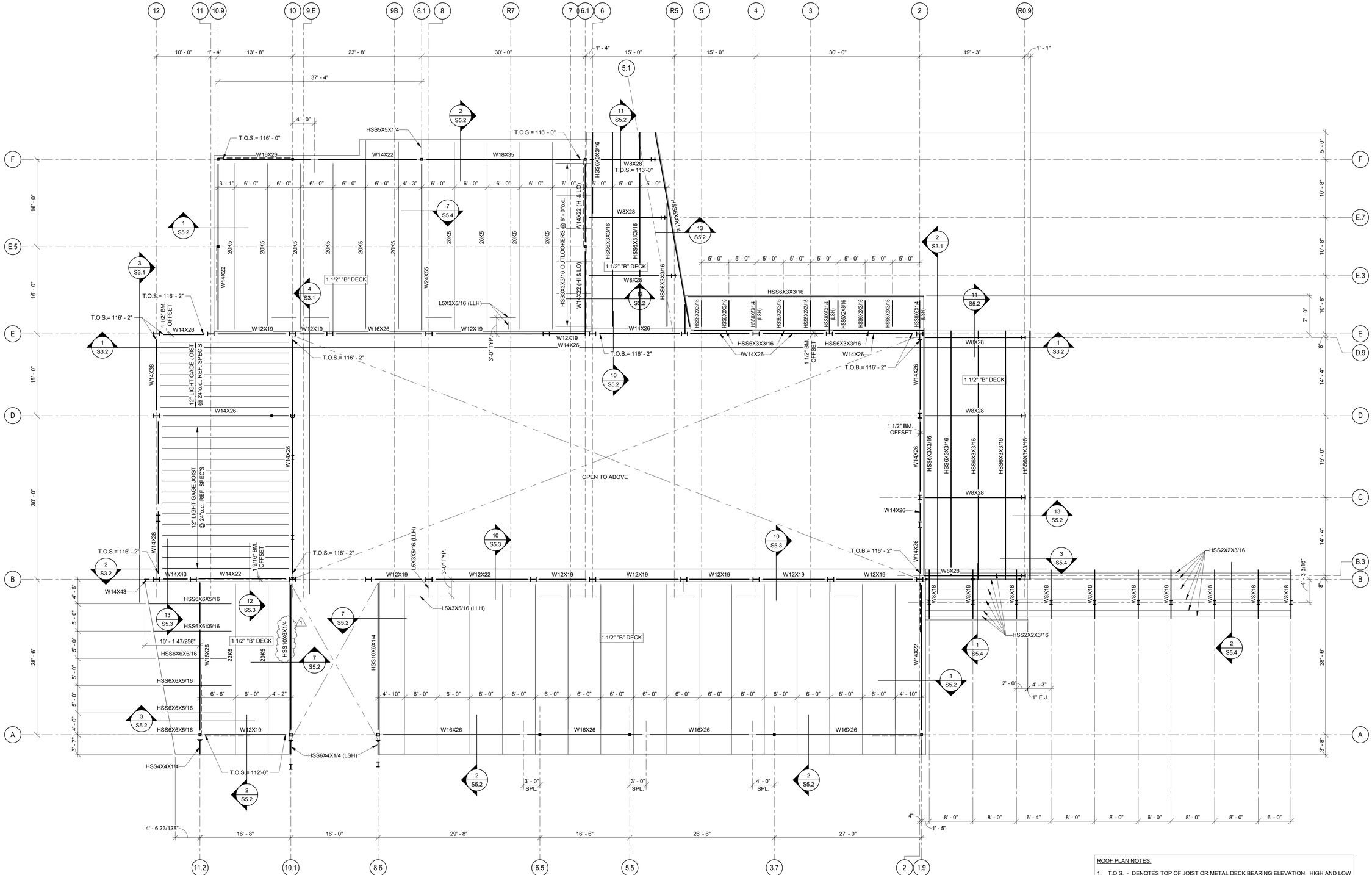

1 LOW ROOF FRAMING PLAN - ALTERNATES

SCALE : 1/8" = 1'-0"

ROOF PLAN NOTES:

1. T.O.S. - DENOTES TOP OF JOIST OR METAL DECK BEARING ELEVATION. HIGH AND LOW T.O.S. ELEVATIONS ARE NOTED ON THE PLANS. IT IS THE CONTRACTOR'S RESPONSIBILITY TO CALCULATE T.O.S. ELEVATIONS REQUIRED AT INTERMEDIATE LOCATIONS BETWEEN THE NOTED HIGH AND LOW T.O.S. ELEVATIONS.
2. CASTELLATED BEAMS ARE BASE BID ALT. #3 REPLACE CB24x31 W/ W24x55
3. "SPL." - DENOTES BEAM SPLICE LOCATION, SEE DETAIL 6 / S5.1
4. SEE DETAIL 8 / S5.1 FOR TYPICAL BEAM TO COLUMN CONNECTION.
5. SEE DETAIL 9 / S5.1 FOR TYPICAL WF TO WF BEAM CONNECTION.
6. "SP" DESIGNATION ON JOISTS DENOTES LOADING. SEE PLAN FOR ADDITIONAL CONCENTRATED LOAD. (TYP. UNIFORM LOAD = 20 PSF DL + 20 PSF LL)
7. ★ - DENOTES REQUIRED BOTTOM FLANGE BRACE, SEE DETAIL 7 / S5.1
8. ▶——— - DENOTES FULL MOMENT CAPACITY BEAM TO COLUMN CONNECTION,
9. — — — — - DENOTES BRACING, REF. ELEVATION VIEW AS NOTED ON PLAN.
10. T.O.W. - DENOTES TOP OF WALL ELEVATION.

LPA
t. 210.829.1730
e. lpa@painc.com
p. 210.829.1737
w. oculpa.com
114 East Cevallos Street
San Antonio, Texas 78204
Alpha Consulting Engineers F-1010
10/17/2014
STATE OF TEXAS
THOMAS C. HAMER
114739
LICENSED
PROFESSIONAL ENGINEER
ALPHA
Consulting Engineers, Inc.
STRUCTURAL ENGINEERS
13300 OLD BLANCO RD, SUITE 326
SAN ANTONIO, TEXAS 78216
TEL: (210) 227-3647
www.alphaconsultingengineers.com

DISTRICT 2 BRANCH LIBRARY

U.S. HWY 87, SAN ANTONIO, TEXAS 78222

Developed for CITY OF SAN ANTONIO

This and all other project documents and all ideas, sketches, and designs incorporated herein, as instruments of service, are the property of LPA and are not to be used in whole or in part, for any other project without the written authorization of LPA and LPA's consultants. Reproduction of LPA and Client, LPA Among given limited notice that any reproduction of LPA and LPA's consultants' documents is not only unlawful, but automatically binds all parties to a contract for the use of such documents by LPA and LPA's consultants to the maximum legal extent allowable by law. Client and contractor are solely responsible for any discrepancies between project documents and existing conditions.

© Copyright 2014

Revision	Date
1 Addendum #01	11/07/2014

Submittal	Date

Job. No.	132231
Date	09-08-14
Checked by	Checker
Scale	As indicated

LOW ROOF FRAMING PLAN - ALTERNATES

S2.3A

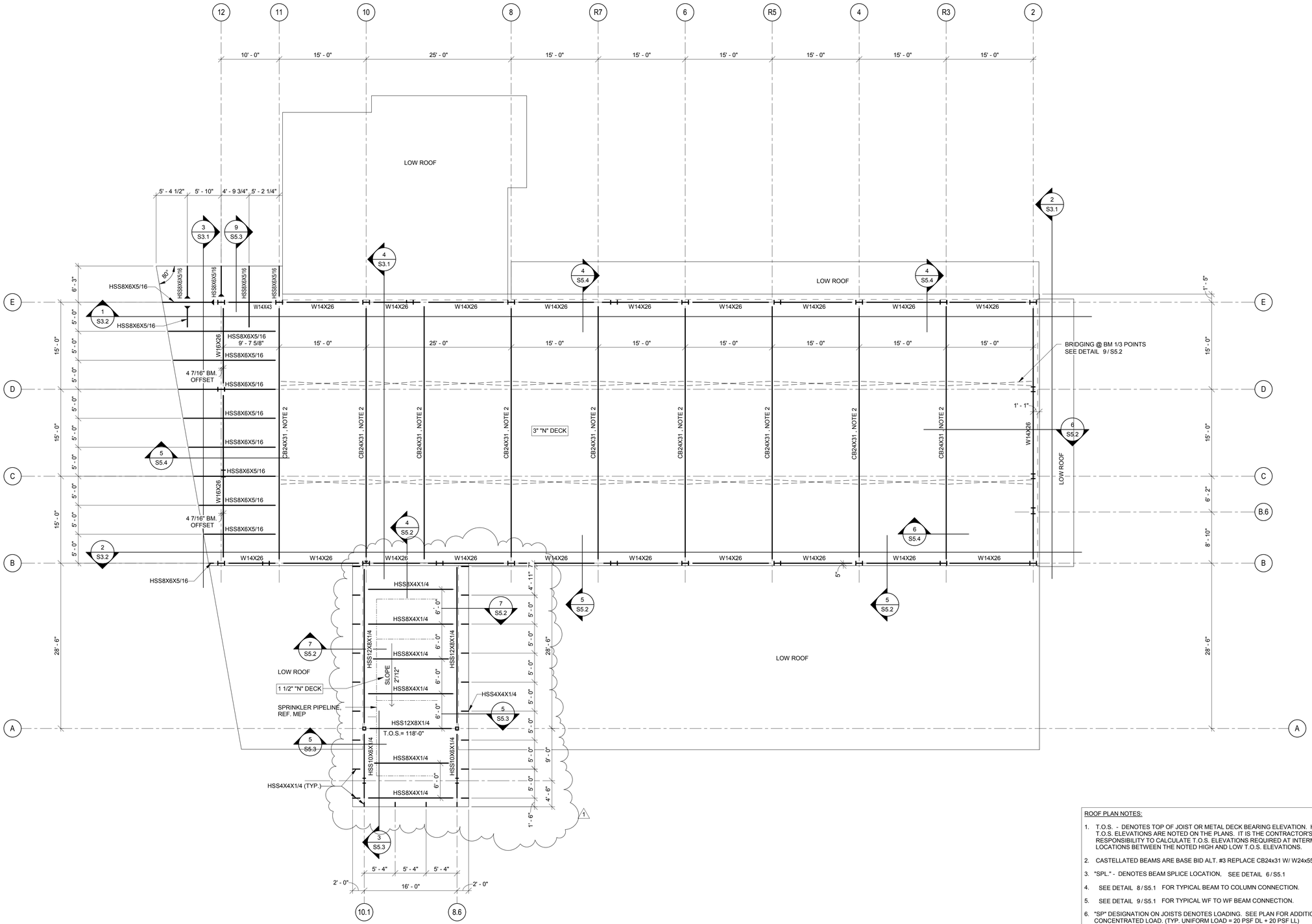

1 HIGH ROOF FRAMING PLAN

SCALE : 1/8" = 1'-0"

ROOF PLAN NOTES:

1. T.O.S. - DENOTES TOP OF JOIST OR METAL DECK BEARING ELEVATION. HIGH AND LOW T.O.S. ELEVATIONS ARE NOTED ON THE PLANS. IT IS THE CONTRACTOR'S RESPONSIBILITY TO CALCULATE T.O.S. ELEVATIONS REQUIRED AT INTERMEDIATE LOCATIONS BETWEEN THE NOTED HIGH AND LOW T.O.S. ELEVATIONS.
2. CASTELLATED BEAMS ARE BASE BID ALT. #3 REPLACE CB24x31 W/ W24x55
3. "SPL." - DENOTES BEAM SPLICE LOCATION, SEE DETAIL 6 / S5.1
4. SEE DETAIL 8 / S5.1 FOR TYPICAL BEAM TO COLUMN CONNECTION.
5. SEE DETAIL 9 / S5.1 FOR TYPICAL WF TO WF BEAM CONNECTION.
6. "SP" DESIGNATION ON JOISTS DENOTES LOADING. SEE PLAN FOR ADDITIONAL CONCENTRATED LOAD. (TYP. UNIFORM LOAD = 20 PSF DL + 20 PSF LL)
7. ★ - DENOTES REQUIRED BOTTOM FLANGE BRACE, SEE DETAIL 7 / S5.1
8. ▶——— - DENOTES FULL MOMENT CAPACITY BEAM TO COLUMN CONNECTION,
9. — — — - DENOTES BRACING, REF. ELEVATION VIEW AS NOTED ON PLAN.
10. T.O.W. - DENOTES TOP OF WALL ELEVATION.

LPA
t. 210.829.1730
e. lpa@lpainc.com
p. 210.829.1737
w. oculpa.com
114 East Cevallos Street
San Antonio, Texas 78204

Alpha Consulting Engineers F-1010
10/17/2014
STATE OF TEXAS
THOMAS C. HAMER
114739
LICENSED
PROFESSIONAL ENGINEER

ALPHA
Consulting Engineers, Inc.
STRUCTURAL ENGINEERS
13300 OLD BLANCO RD, SUITE 326
SAN ANTONIO, TEXAS 78216
TEL: (210) 227-3647
www.alphaconsultingengineers.com

DISTRICT 2 BRANCH LIBRARY

U.S. HWY 87, SAN ANTONIO, TEXAS 78222

Developed for CITY OF SAN ANTONIO

This and all other project documents and all ideas, designs, arrangements, proportionals, details, and estimates, and designs incorporated herein, are the property of LPA, Inc. (LPA) and should be returned to LPA upon request. Any reproduction of these documents without written permission from LPA and Client, LPA hereby gives limited notice that any such use, reproduction, or distribution of documents not sealed, signed, and dated by LPA, or documents marked preliminary, is not only unlawful, but potentially binds all parties who use, reproduce, or distribute such documents to LPA and LPA's Consultants to the assumed legal extent of such unlawful use, reproduction, or distribution. LPA and LPA's Consultants make no representations regarding the suitability of these documents for any other purpose than the intended building identified or indirectly from project/document release.

Project documents describe designs intent of work and are not intended to be used as construction documents. LPA and LPA's Consultants make no representations regarding the suitability of these documents for any purpose, or responsibility for any discrepancies between project documents and building conditions.

© Copyright 2014

Revision	Date
1 Addendum #01	11/07/2014

Submittal	Date

Job. No.	132231
Date	09-08-14
Checked by	TCH
Scale	As indicated

HIGH ROOF FRAMING PLAN

S2.4

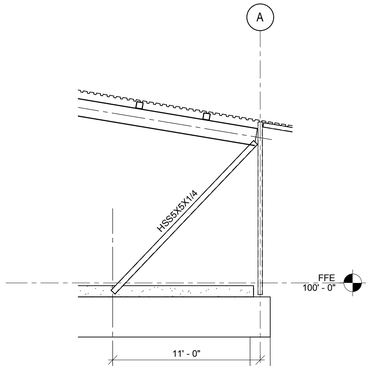

1 BRACE 1
SCALE : 3/16" = 1'-0"

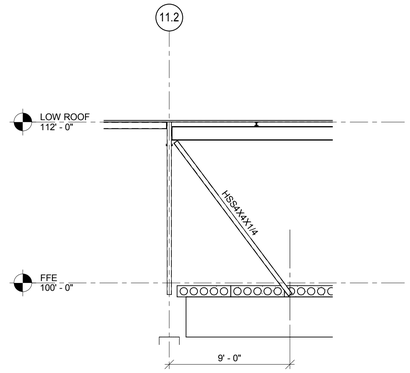

2 BRACE 2
SCALE : 3/16" = 1'-0"

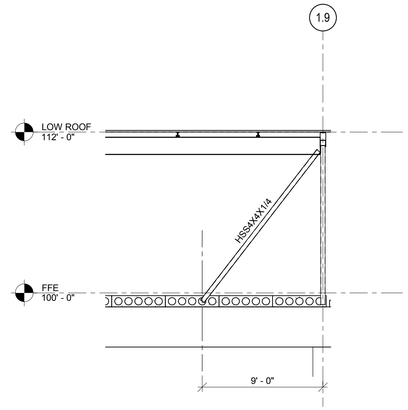

3 BRACE 3
SCALE : 3/16" = 1'-0"

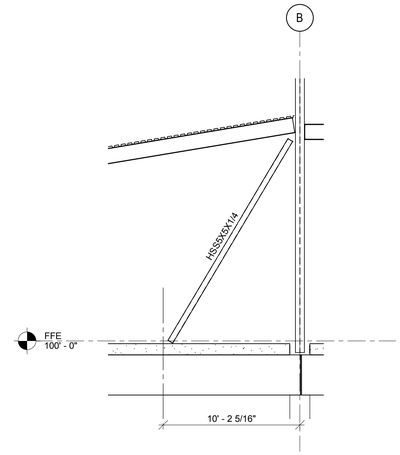

4 BRACE 4
SCALE : 3/16" = 1'-0"

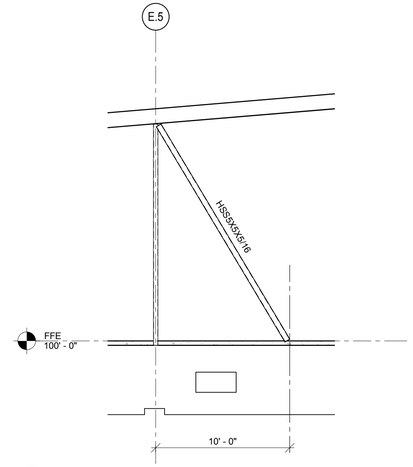

5 BRACE 5
SCALE : 3/16" = 1'-0"

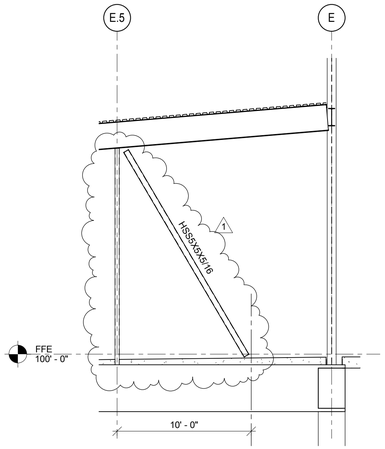

6 BRACE 8
SCALE : 3/16" = 1'-0"

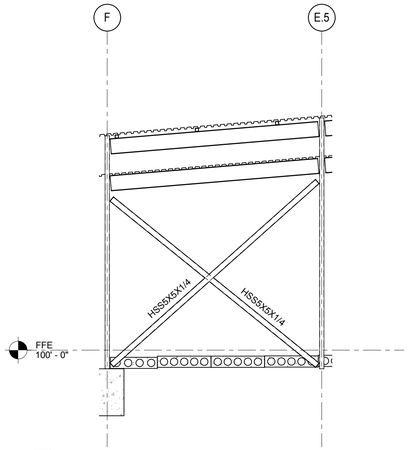

7 BRACE 9
SCALE : 3/16" = 1'-0"

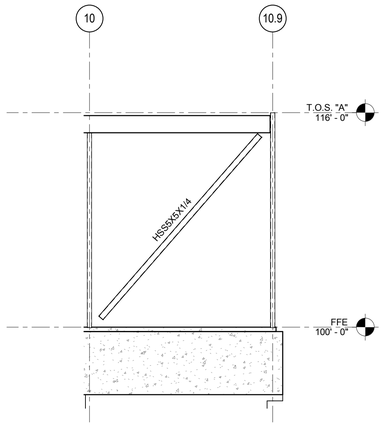

8 BRACE 6
SCALE : 3/16" = 1'-0"

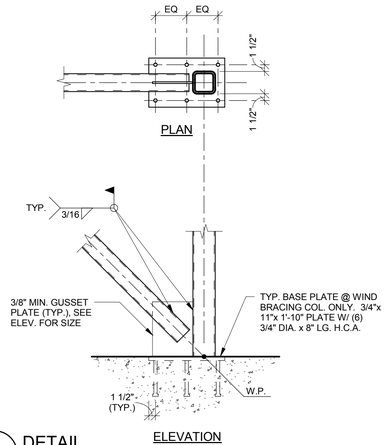

9 DETAIL
SCALE : 3/4" = 1'-0"

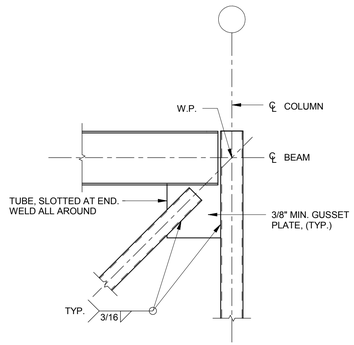

12 DETAIL
SCALE : 3/4" = 1'-0"

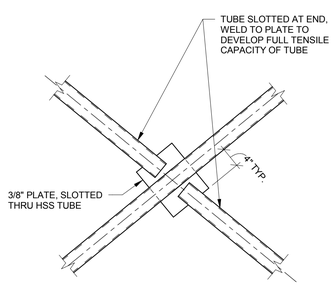

13 DETAIL
SCALE : 3/4" = 1'-0"

LPA
t. 210.829.1730
e. lpa@lpainc.com
p. 210.829.1737
w. oculpa.com
114 East Cevallos Street
San Antonio, Texas 78204

Alpha Consulting Engineers F-1010
10/17/2014
STATE OF TEXAS
THOMAS C. HAMER
114739
LICENSED
PROFESSIONAL ENGINEER

ALPHA
Consulting Engineers, Inc.
STRUCTURAL ENGINEERS
13300 OLD BLANCO RD, SUITE 326
SAN ANTONIO, TEXAS 78216
TEL: (210) 227-3647
www.alphaconsultingengineers.com

DISTRICT 2 BRANCH LIBRARY

U.S. HWY 87, SAN ANTONIO, TEXAS 78222

Developed for CITY OF SAN ANTONIO

This and all other project documents and all ideas, designs, and designs incorporated herein, as an instrument of service, are the property of LPA and/or its consultants, as the legal owner of the copyright in and to the same. LPA and/or its consultants retain all common law, statutory and other reserved rights, including the copyright thereto. LPA and Client, LPA's client and/or its consultants, LPA and Client, LPA's client and/or its consultants, and/or LPA and Client, LPA's client and/or its consultants may rely upon the accuracy of the documents prepared by LPA and/or LPA's Consultants to the extent permitted by law but without liability or obligation to LPA and/or LPA's Consultants. LPA and/or LPA's Consultants do not warrant, guarantee, or represent the accuracy of the documents to any other entity or person, regardless of the form of use, including, but not limited to, reliance by others, and any such use or reliance is at the user's sole risk and without liability or legal exposure to LPA and/or LPA's Consultants. LPA and/or LPA's Consultants do not warrant, guarantee, or represent the accuracy of the documents to any other entity or person, regardless of the form of use, including, but not limited to, reliance by others, and any such use or reliance is at the user's sole risk and without liability or legal exposure to LPA and/or LPA's Consultants.

Project documents describe design intent of work and are not a warranty of existing conditions. Contractor is responsible for verifying existing conditions and dimensions and shall notify LPA and/or LPA's Consultants of any discrepancies between project documents and existing conditions.

© Copyright 2014

Revision		Date
1	Addendum #01	11/07/2014

Submittal	Date

Job. No.	132231
Date	09-08-14
Checked by	TCH
Scale	As indicated

BRACE ELEVATIONS AND DETAILS

S3.3

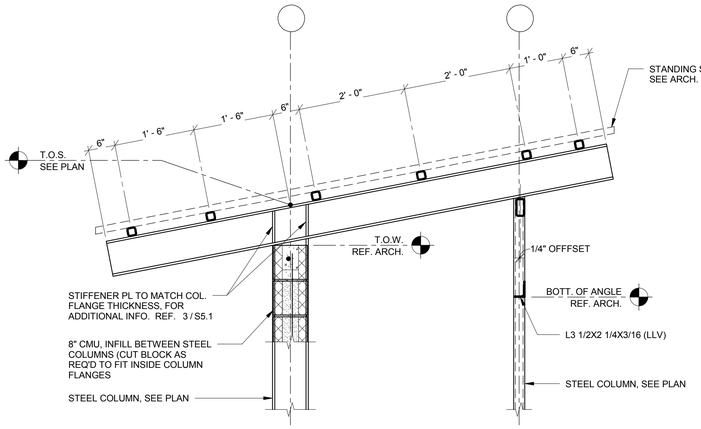

1 SECTION
SCALE : 3/4" = 1'-0"

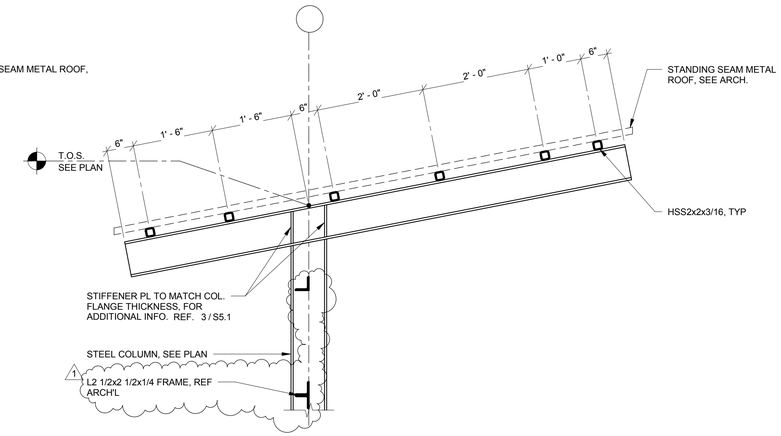

2 SECTION
SCALE : 3/4" = 1'-0"

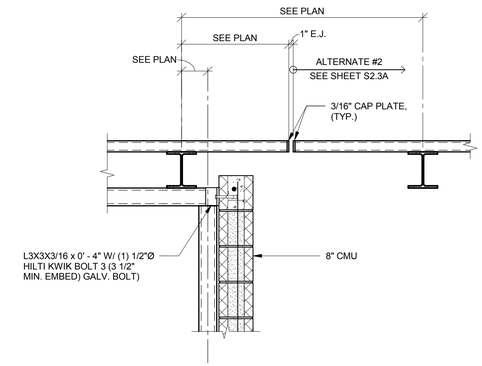

3 SECTION
SCALE : 3/4" = 1'-0"

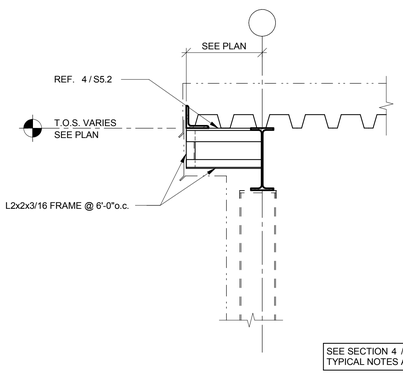

SEE SECTION 4 / S5.2 FOR TYPICAL NOTES AND DETAILS

4 SECTION
SCALE : 3/4" = 1'-0"

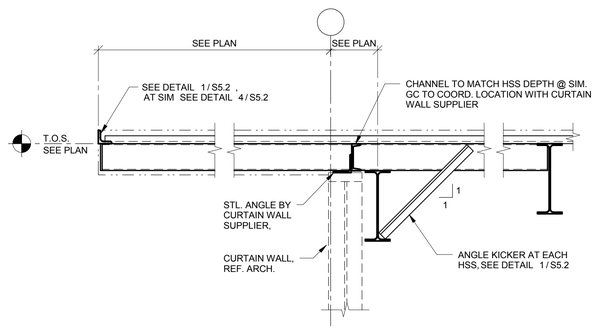

5 SECTION
SCALE : 3/4" = 1'-0"

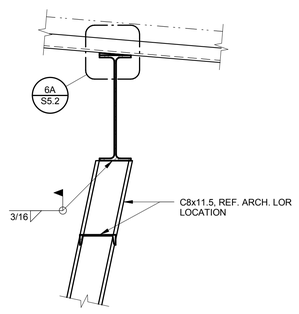

6 SECTION
SCALE : 3/4" = 1'-0"

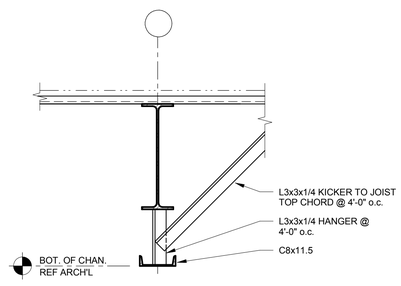

7 SECTION
SCALE : 3/4" = 1'-0"

OCO LPA
t. 210.829.1730
e. lpa@painc.com
p. 210.829.1737
w. ocolpa.com
114 East Cevallos Street
San Antonio, Texas 78204

Alpha Consulting Engineers F-1010
10/17/2014
STATE OF TEXAS
THOMAS C. HAMER
114739
LICENSED
PROFESSIONAL ENGINEER

ALPHA
Consulting Engineers, Inc.
STRUCTURAL ENGINEERS
13300 OLD BLANCO RD, SUITE 326
SAN ANTONIO, TEXAS 78216
TEL: (210) 227-3647
www.alphaconsultingengineers.com

DISTRICT 2 BRANCH LIBRARY

U.S. HWY 87, SAN ANTONIO, TEXAS 78222

Developed for CITY OF SAN ANTONIO

This and all other project documents and all ideas, designs, arrangements and plans indicated or represented by these documents, including but not limited to, the architectural, mechanical, electrical, structural, civil, landscape and other designs, plans and specifications, are the property of LPA, Inc. (LPA) and pursuant to agreement, may not be used by any person or entity other than LPA and Client. LPA hereby gives limited notice that any such use, if not authorized by a written agreement between LPA and Client, LPA hereby gives limited notice that any such use, if not authorized by a written agreement between LPA and Client, LPA hereby gives limited notice that any such use, if not only unlawful, but nevertheless, binds all such users to a royalty payment to LPA, and that LPA and LPA's Consultants to the maximum legal extent will be held harmless for any reuse of these documents by others or for any other purpose not intended by the author, or for any modifications made to any such document without the express written consent of LPA, Inc. and LPA's Consultants.

Project documents describe design intent of work and are not intended to be construction means and methods. LPA and LPA's Consultants make no representations as to the suitability of these documents for construction, nor responsible for any discrepancies between project documents and applicable building conditions.

© Copyright 2014

Revision	Date
1 Addendum #01	11/07/2014

Submittal	Date

Job. No.	132231
Date	09-08-14
Checked by	Checker
Scale	3/4" = 1'-0"

SECTIONS AND DETAILS

S5.4