City of San Antonio

ADDENDUM II

SUBJECT: Request for Qualifications for License of Sports Fields at Old Spanish Trail Park, (RFQ 16-046, 6100007078), Scheduled to Close: March 18, 2016; Date of Issue: February 17, 2016

FROM: Denise D. Gallegos, C.P.M., CPPB
Procurement Administrator

DATE: March 10, 2016

THIS NOTICE SHALL SERVE AS ADDENDUM NO. II - TO THE ABOVE REFERENCED REQUEST FOR QUALIFICATIONS

QUESTIONS SUBMITTED IN ACCORDANCE WITH SECTION 007, PRE-SUBMITTAL CONFERENCE:

Question 1: Can we get a map of current irrigation pipes (as-builds) in case we would like to propose future improvements for seeding, etc.?
Response 1: The project has not been finalized yet, and the as-builds will be received after the project is finalized. In lieu of as-builds, please refer to the Design Plan sheets for the irrigation (C23.01-C23.24 irrigation design plans *Not As-Builds*) which are attached to the RFQ. The Design Plan is close but not exact as there may have been a field change since the design.

Question 2: Can we get a copy of the current electricity bills / as-builds for existing trail lighting?
Response 2: We do not have a copy of the contractor's current electricity bills. In lieu of electricity bills, please refer to the Electrical Design Plan sheets for the trail (C23.25-C28.06 Electrical Design Plans *Not As-Builds*) which are attached to the RFQ.

Question 3: How can we get information on or a description of the surface that was laid in the playing fields? Was there a base, aggregate or sand laid down?
Response 3: At this time, we do not have a Geotechnical Report which would contain this information. We may provide it at a later date.

Denise D. Gallegos, C.P.M., CPPB
Procurement Administrator
Finance Department – Purchasing Division

Design Plan for Irrigation

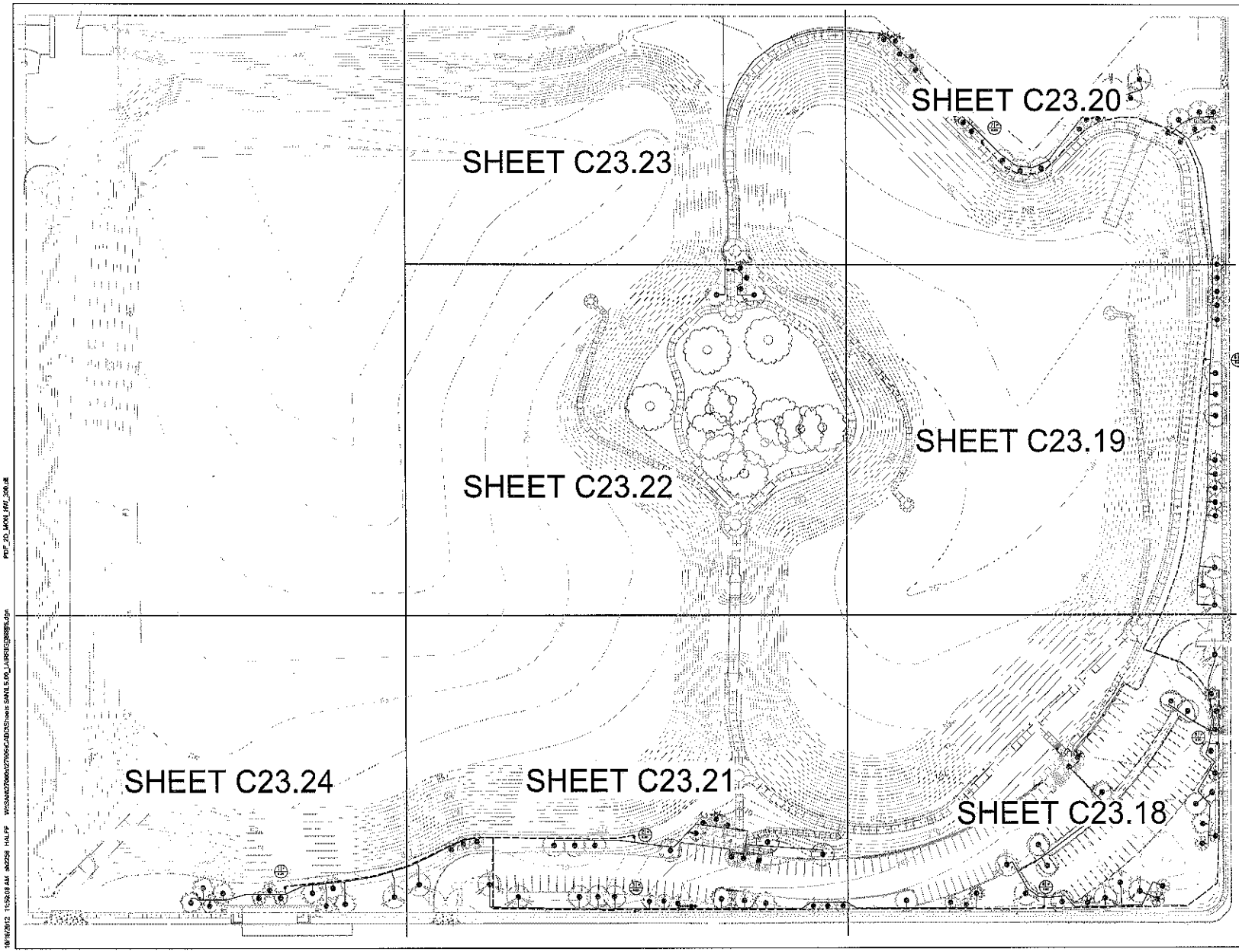

BEXAR COUNTY
FLOOD CONTROL DIVISION

NO.	DATE	DESCRIPTION	DWG	CHK

REVISIONS

LAGUNE PLACE PHASE III RSRF - BA-2

IRRIGATION PLAN ORIENTATION SHEET

HALFF

200 EAST SONTERRA BLVD., SUITE 230
SAN ANTONIO, TEXAS 78258-3331
TEL (215) 798-1895
FAX (215) 798-1896
TBPE FIRM REGISTRATION #312

DGN: TLF		SHEET NO.	C23.17
CHK DGN: TLF			
DWG:	STATE	COUNTY	
CHK DWG:	TEXAS	BEXAR	17 OF 31

10/18/2012 11:50:08 AM ab2258 HALFF W:\SAN\27000s\27905\CADD\Sheets SANL5.00_LAIRRIG\[illegible].dgn PDF_20_MON_HW_300.pdf

MATCHLINE SHEET C23.19

MATCHLINE SHEET C23.21

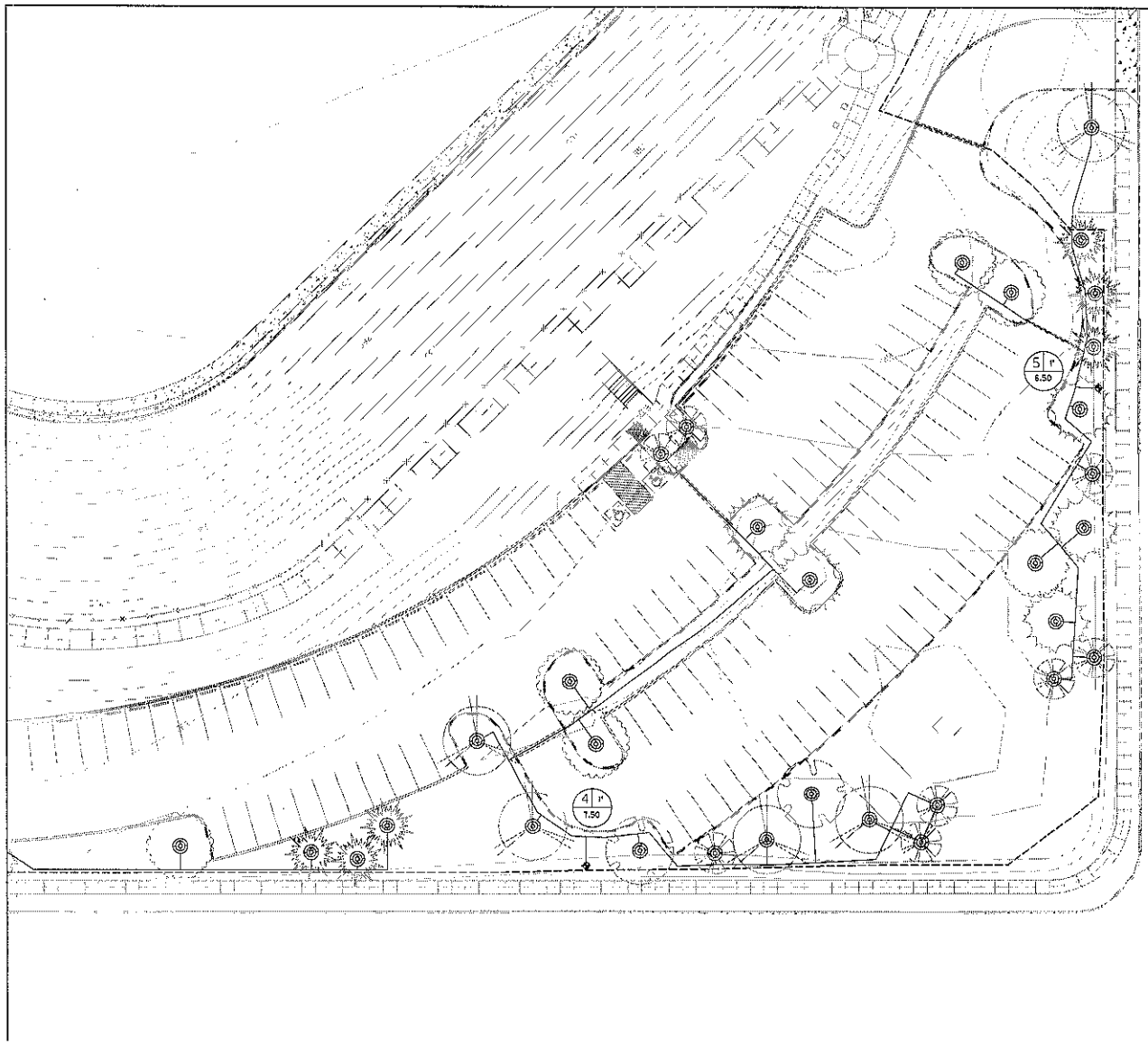

0' 20' 40'
1" = 40'

IRRIGATION LEGEND

- NETAFIM MODEL TLDL-9-18 TREE DRIP RING
- HUNTER I-CORE IC-1200-PP CONTROLLER W/ SOLAR SYNC WEATHER SENSOR.
- HUNTER ICV SERIES ELECTRIC REMOTE CONTROL VALVE W/ ACCU-SYNC AS-ADJ ADJUSTABLE PRESSURE REGULATOR. SIZE AS INDICATED ON PLAN.
- 2" WATER METER (BY OTHERS)
- 2" NIBCO T-113-K ISOLATION GATE VALVE
- 2" WILKINS SERIES "S" Y-STRAINER VALVE
- 2" FEBCO SERIES 856 DOUBLE CHECK BACKFLOW PREVENTION DEVICE
- 2" HUNTER ICV MASTER VALVE
- 3" MAINLINE PIPING SDR 21, CLASS 200 PVC PIPE
- SDR 21, CLASS 200 PVC LATERAL PIPE SIZE AS INDICATED ON PLAN
- PIPE SLEEVES SCHEDULE 40 PVC SLEEVE SIZED 2" LARGER THAN PIPE SIZE

STATION NO. — X | 02 — VALVE SIZE
18.0 — GALLONS PER MINUTE

NOTES:

1. SEE SHEET C23.25 FOR IRRIGATION NOTES.
2. SEE SHEET C23.31 FOR IRRIGATION DETAILS.

BEXAR COUNTY
FLOOD CONTROL DIVISION

NO	DATE	DESCRIPTION	DRN	CHK

REVISIONS

LAGRE PLACE PHASE III BWP - SA-2

IRRIGATION PLAN

HALFF

700 EAST SONTERRA BLVD., SUITE 230
SAN ANTONIO, TEXAS 78258-3831
TEL (210) 795-1800
FAX (210) 795-1896
TBPE FIRM REGISTRATION #312

DG'D: TLF		SHEET NO.	C23.18
CHK DGN: TLF			
DWG:	STATE	COUNTY	
CHK DWG:	TEXAS	BEXAR	18 OF 31

12/18/2012 11:56:16 AM #n2259 HALFF W:\SAN\27000\27966\CAD\Sheets SAN\LS-IrrLARRIPE\C23.18.dgn PDF_2D_MON_HW_300.pltt

MATCHLINE SHEET C23.20

MATCHLINE SHEET C23.22

MATCHLINE SHEET C23.18

0' 20' 40'
1" = 40'

IRRIGATION LEGEND

- NETAFIM MODEL TLDI-9-18 TREE DRIP RING
- HUNTER I-CORE IC-1200-PP CONTROLLER W/ SOLAR SYNC WEATHER SENSOR.
- HUNTER ICV SERIES ELECTRIC REMOTE CONTROL VALVE W/ ACCU-SYNC AS-ADJ ADJUSTABLE PRESSURE REGULATOR. SIZE AS INDICATED ON PLAN.
- 2" WATER METER (BY OTHERS)
- 2" NIBCO T-113-K ISOLATION GATE VALVE
- 2" WILKINS SERIES "S" Y-STRAINER VALVE
- 2" FEBCO SERIES 850 DOUBLE CHECK BACKFLOW PREVENTION DEVICE
- 2" HUNTER ICV MASTER VALVE
- 3" MAINLINE PIPING SDR 21, CLASS 200 PVC PIPE
- SDR 21, CLASS 200 PVC LATERAL PIPE SIZE AS INDICATED ON PLAN
- PIPE SLEEVES SCHEDULE 40 PVC SLEEVE SIZED 2" LARGER THAN PIPE SIZE

STATION NO. — VALVE SIZE
X 1½ 15.0
GALLONS PER MINUTE

NOTES:

1. SEE SHEET C23.25 FOR IRRIGATION NOTES.
2. SEE SHEET C23.31 FOR IRRIGATION DETAILS.

BEXAR COUNTY
FLOOD CONTROL DIVISION

NO	DATE	DESCRIPTION	DWN	CHK
		REVISIONS		

IRRIGATION PLAN

HALFF
200 EAST BONTERRA BLVD., SUITE 230
SAN ANTONIO, TEXAS 78258-7001
TEL (210) 798-1995
FAX (210) 798-1997
TBPE FIRM REGISTRATION #312

DSN: TLF	SHEET NO. C23.19		
CHK: TLF			
DWG:	STATE	COUNTY	
CHG: DWG:	TEXAS	BEXAR	19 OF 31

10/10/2012 11:50:19 AM an2339 HALFF W:\SAN\27800\027800\CADD\Sheets SAN\L5.02_LARRIGQ2000.dgn PDF_2D_MON_HW_300.pit

MATCHLINE SHEET C23.23

MATCHLINE SHEET C23.19

N

0' 20' 40'

1" = 40'

IRRIGATION LEGEND

- NETAFIM MODEL TLDL-9-18 TREE DRIP RING
- HUNTER I-CORE IC-1200-PP CONTROLLER W/ SOLAR SYNC WEATHER SENSOR.
- HUNTER ICV SERIES ELECTRIC REMOTE CONTROL VALVE W/ ACCU-SYNC AS-ADJ ADJUSTABLE PRESSURE REGULATOR. SIZE AS INDICATED ON PLAN.
- 2" WATER METER (BY OTHERS)
- 2" NIBCO T-113-K ISOLATION GATE VALVE
- 2" WILKINS SERIES "S" Y-STRAINER VALVE
- 2" FEBCO SERIES 850 DOUBLE CHECK BACKFLOW PREVENTION DEVICE
- 2" HUNTER ICV MASTER VALVE
- 3" MAINLINE PIPING SDR 21, CLASS 200 PVC PIPE
- SDR 21, CLASS 200 PVC LATERAL PIPE SIZE AS INDICATED ON PLAN
- PIPE SLEEVES SCHEDULE 40 PVC SLEEVE SIZED 2" LARGER THAN PIPE SIZE

STATION NO. — VALVE SIZE — GALLONS PER MINUTE

NOTES:

1. SEE SHEET C23.25 FOR IRRIGATION NOTES.
2. SEE SHEET C23.31 FOR IRRIGATION DETAILS.

BEXAR COUNTY
FLOOD CONTROL DIVISION

NO	DATE	DESCRIPTION	DWG	CHK

REVISIONS

LACROSS FLOOD PHASE III DRAFT - SAWS

IRRIGATION PLAN

HALFF

200 EAST CONTERRA BLVD., SUITE 230
SAN ANTONIO, TEXAS 78232-7021
TEL (210) 798-1905
FAX (210) 798-1906
TBPE FIRM REGISTRATION #312

DSN: TLF		SHEET NO.	C23.20
DR: TLF			
CHKD:	STATE	COUNTY	
DWG:	TEXAS	BEXAR	20 OF 31

10/18/2012 11:50:25 AM an2298 HALFF W:\SAN\2200\C2100\CADD\Sheets SAN\L5\D_LARTRG\C23\C23.dgn PDF_2D_MOM_HW_300.pltt

MATCHLINE SHEET C23.22

MATCHLINE SHEET C23.24

MATCHLINE SHEET C23.18

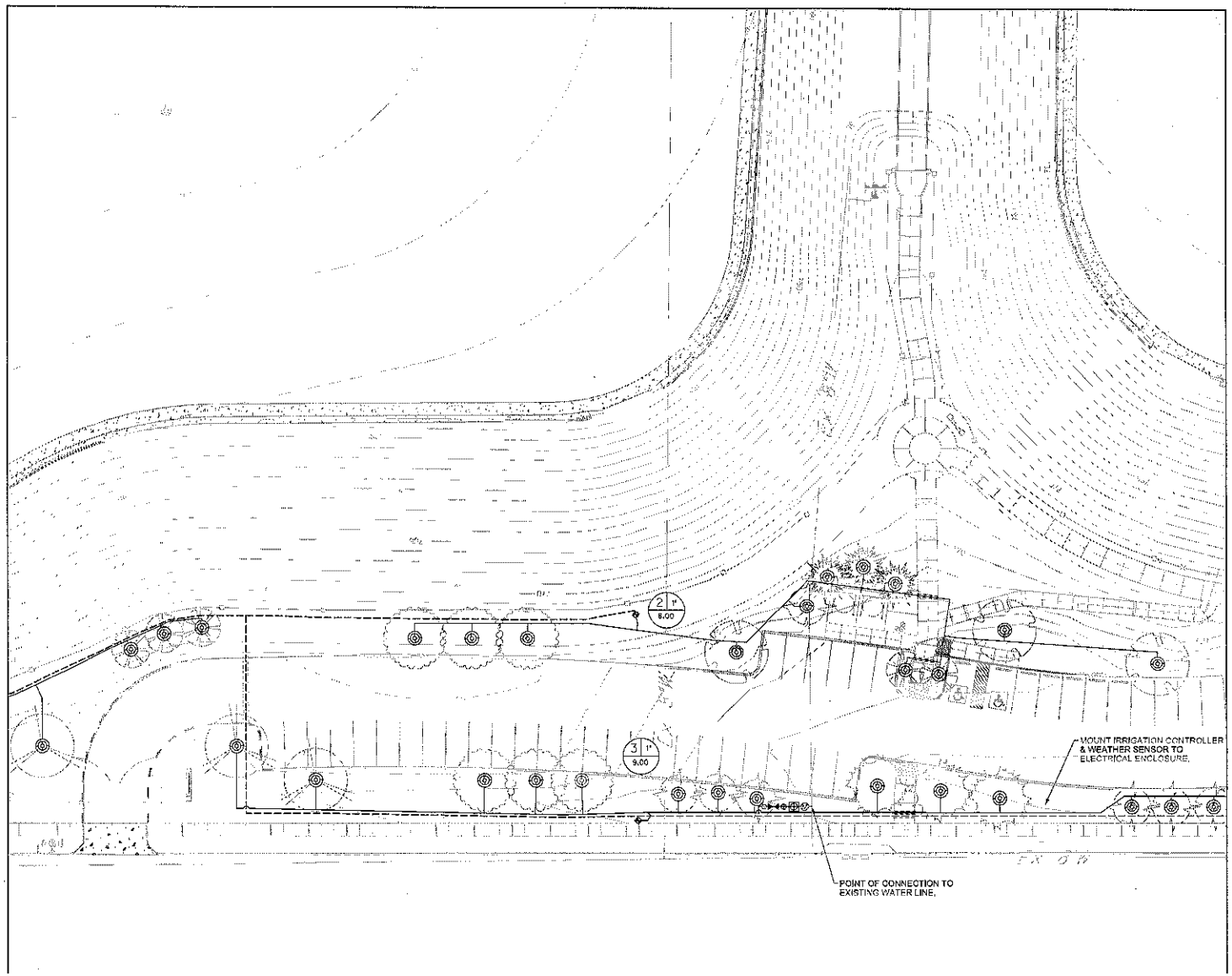

N

0' 20' 40'

1" = 40'

IRRIGATION LEGEND

- NETAFIM MODEL TLOL-0-18 TREE DRIP RING
- HUNTER I-CORE IC-1200-PP CONTROLLER W/ SOLAR SYNC WEATHER SENSOR.
- HUNTER ICV SERIES ELECTRIC REMOTE CONTROL VALVE W/ ACCU-SYNC AS-ADJ ADJUSTABLE PRESSURE REGULATOR. SIZE AS INDICATED ON PLAN.
- 2" WATER METER (BY OTHERS)
- 2" MIRCO T-113-K ISOLATION GATE VALVE
- 2" WILKINS SERIES "S" Y-STRAINER VALVE
- 2" FEBCO SERIES 850 DOUBLE CHECK BACKFLOW PREVENTION DEVICE
- 2" HUNTER ICV MASTER VALVE
- 3" MAINLINE PIPING SDR 21, CLASS 200 PVC PIPE
- SDR 21, CLASS 200 PVC LATERAL PIPE SIZE AS INDICATED ON PLAN
- PIPE SLEEVES SCHEDULE 40 PVC SLEEVE SIZED 2" LARGER THAN PIPE SIZE

STATION NO. — VALVE SIZE — GALLONS PER MINUTE

NOTES:
1. SEE SHEET C23.26 FOR IRRIGATION NOTES.
2. SEE SHEET C23.31 FOR IRRIGATION DETAILS.

10-15-12

BEXAR COUNTY
FLOOD CONTROL DIVISION

NO.	DATE	DESCRIPTION	DWG	CHK
		REVISIONS		

1 INCH = PLACE PHASE III SCALE - SAME

IRRIGATION PLAN

HALFF

200 EAST BONTERRA BLVD., SUITE 230
SAN ANTONIO, TEXAS 78258-3991
TEL (210) 798-1905
FAX (210) 798-1936
TBPE FIRM REGISTRATION #312

DGN: TLF		SHEET NO.	C23.21
CHK: TLF			
DWG:	STATE	COUNTY	
CHK:	TEXAS	BEXAR	21 OF 31

10/15/2012 11:35:01 AM ar0258 HALFF W:\SAN\27000\27905\ACAD\Sheets SAN\LS\IA_LA\IRRIG\27905.dgn PDF_20_MON_HW_300.dll

MATCHLINE SHEET C23.23

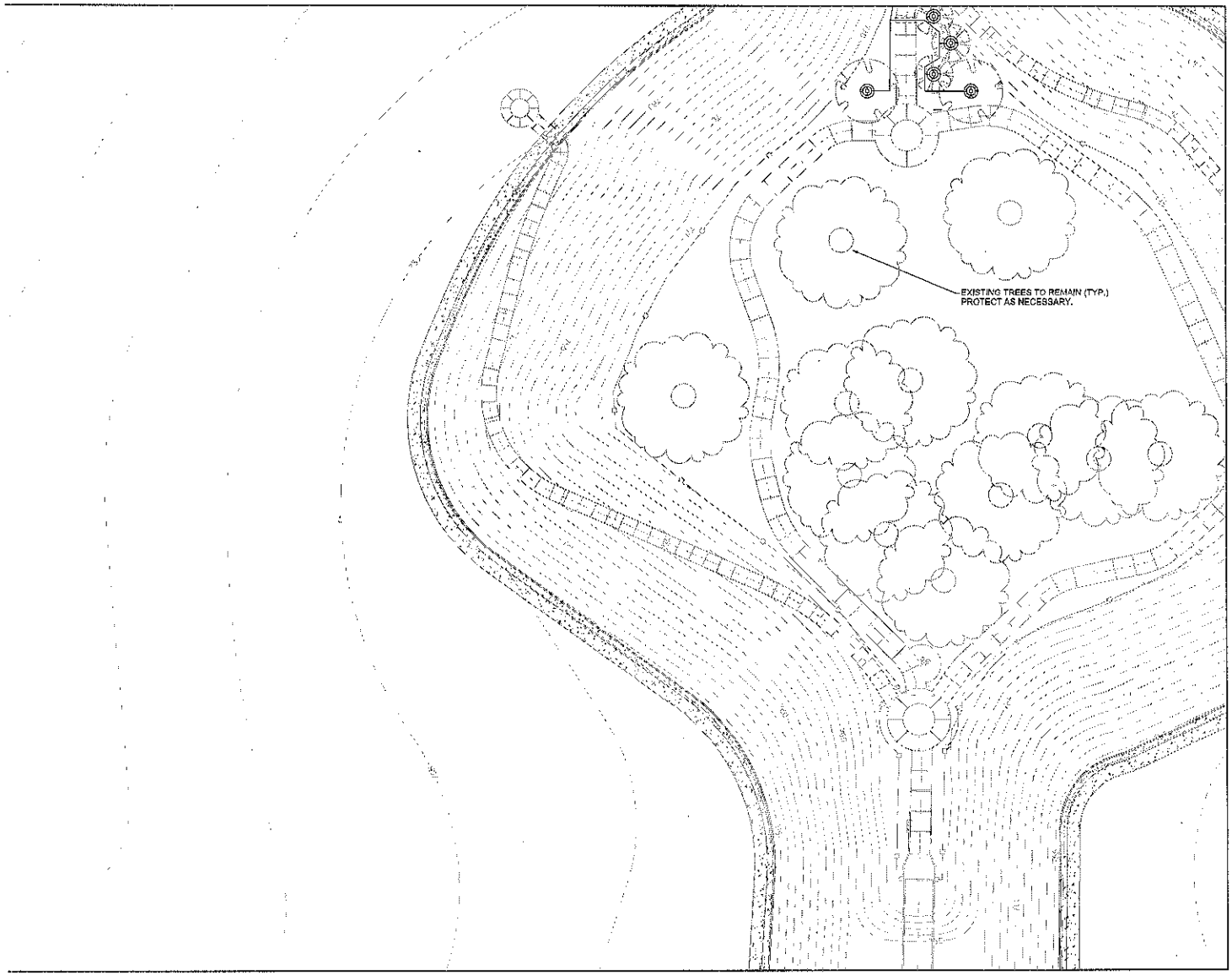

MATCHLINE SHEET C23.21

MATCHLINE SHEET C23.19

N

0' 20' 40'
1" = 40'

IRRIGATION LEGEND

- NETAFIM MODEL TLDL-9-18 TREE DRIP RING
- HUNTER I-CORE IC-1200-PP CONTROLLER W/ SOLAR SYNC WEATHER SENSOR.
- HUNTER ICV SERIES ELECTRIC REMOTE CONTROL VALVE W/ ACCU-SYNC AS-ADJ ADJUSTABLE PRESSURE REGULATOR. SIZE AS INDICATED ON PLAN.
- 2" WATER METER (BY OTHERS)
- 2" NIBCO T-113-K ISOLATION GATE VALVE
- 2" WILKINS SERIES "S" Y-STRAINER VALVE
- 2" FEBCO SERIES 850 DOUBLE CHECK BACKFLOW PREVENTION DEVICE
- 2" HUNTER ICV MASTER VALVE
- 3" MAINLINE PIPING SDR 21, CLASS 200 PVC PIPE
- SDR 21, CLASS 200 PVC LATERAL PIPE SIZE AS INDICATED ON PLAN
- PIPE SLEEVES SCHEDULE 40 PVC SLEEVE SIZED 2" LARGER THAN PIPE SIZE

STATION NO. — VALVE SIZE
GALLONS PER MINUTE

NOTES:
1. SEE SHEET C23.25 FOR IRRIGATION NOTES.
2. SEE SHEET C23.31 FOR IRRIGATION DETAILS.

BEXAR COUNTY
FLOOD CONTROL DIVISION

NO	DATE	DESCRIPTION	DWG	CHK

REVISIONS

LADONE PLACE PHASE III RSWF - BW2

IRRIGATION PLAN

HALFF

300 EAST SONTERRA BLVD., SUITE 230
SAN ANTONIO, TEXAS 78258-3900
TEL (210) 798-1855
FAX (210) 798-1896
TBPE FIRM REGISTRATION #312

DSN: TLF		SHEET NO.	C23.22
CHK: TLF			
DWG:	STATE	COUNTY	
CHK: DWG:	TEXAS	BEXAR	22 OF 31

TLF 6/2/2012 11:50:35 AM sh2258 HALFF W:\SAN\0700\002700\CAD\Sheets SAN\L5.05_LARGE\C23B\B\E.dgn PDF_2D_MDM_HW_360.dll

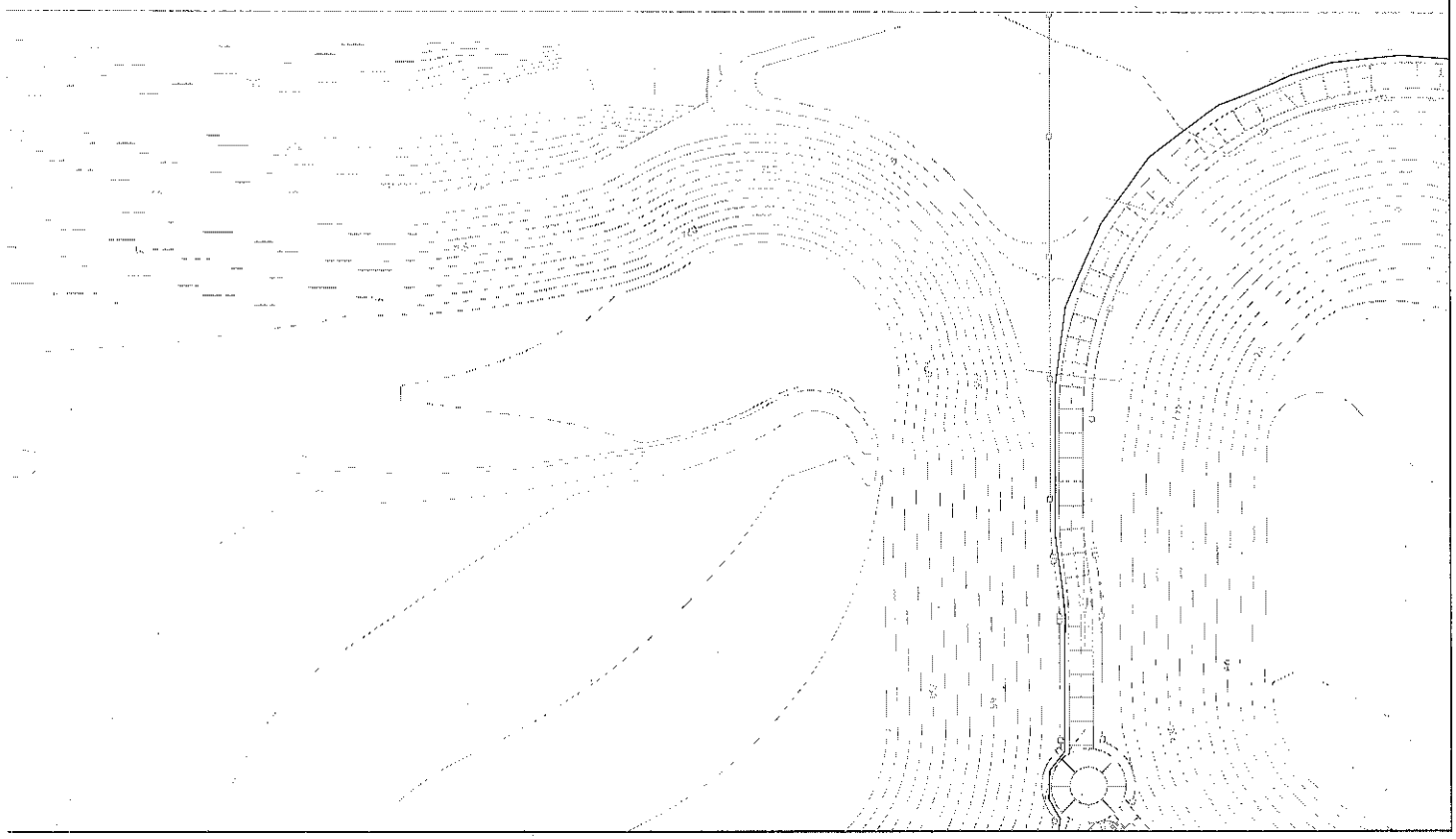

0' 20' 40'
1" = 40'

IRRIGATION LEGEND

- NETAFIM MODEL TLDL-9-18 TREE DRIP RING
- HUNTER I-CORE IC-1200-PP CONTROLLER W/ SOLAR SYNC WEATHER SENSOR.
- HUNTER ICV SERIES ELECTRIC REMOTE CONTROL VALVE W/ ACCU-SYNC AS-ADJ ADJUSTABLE PRESSURE REGULATOR. SIZE AS INDICATED ON PLAN.
- 2" WATER METER (BY OTHERS)
- 2" NIBCO T-113-K ISOLATION GATE VALVE
- 2" WILKINS SERIES "S" Y-STRAINER VALVE
- 2" FEBCO SERIES 850 DOUBLE CHECK BACKFLOW PREVENTION DEVICE
- 2" HUNTER ICV MASTER VALVE
- 3" MAINLINE PIPING SDR 21, CLASS 200 PVC PIPE
- SDR 21, CLASS 200 PVC LATERAL PIPE SIZE AS INDICATED ON PLAN
- PIPE SLEEVES SCHEDULE 40 PVC SLEEVE SIZED 2" LARGER THAN PIPE SIZE

STATION NO. — VALVE SIZE — 1½ — 18.0 — GALLONS PER MINUTE

NOTES:

1. SEE SHEET C23.25 FOR IRRIGATION NOTES.
2. SEE SHEET C23.31 FOR IRRIGATION DETAILS.

BEXAR COUNTY
FLOOD CONTROL DIVISION

NO.	DATE	DESCRIPTION	DWG	CHK

REVISIONS

LADDIE PLACE PHASE III BOX F - SH-2

IRRIGATION PLAN

HALFF

300 EAST SONTERRA BLVD., SUITE 230
SAN ANTONIO, TEXAS 78258-3981
TEL (210) 798-1895
FAX (210) 798-1896
TBPE FIRM REGISTRATION #312

DGN: TLF		SHEET NO.	C23.23
CHK DGN: TLF			
DWG:	STATE	COUNTY	
CHK DWG:	TEXAS	BEXAR	23 OF 31

10/15/2012 11:50:38 AM sh2258 HALFF W:\SAN\27000s\27905\CADD\Sheets SAN\L5.06_LAIRRIGCONNOTES.dgn PDF_2D_MON_HW_300.pit

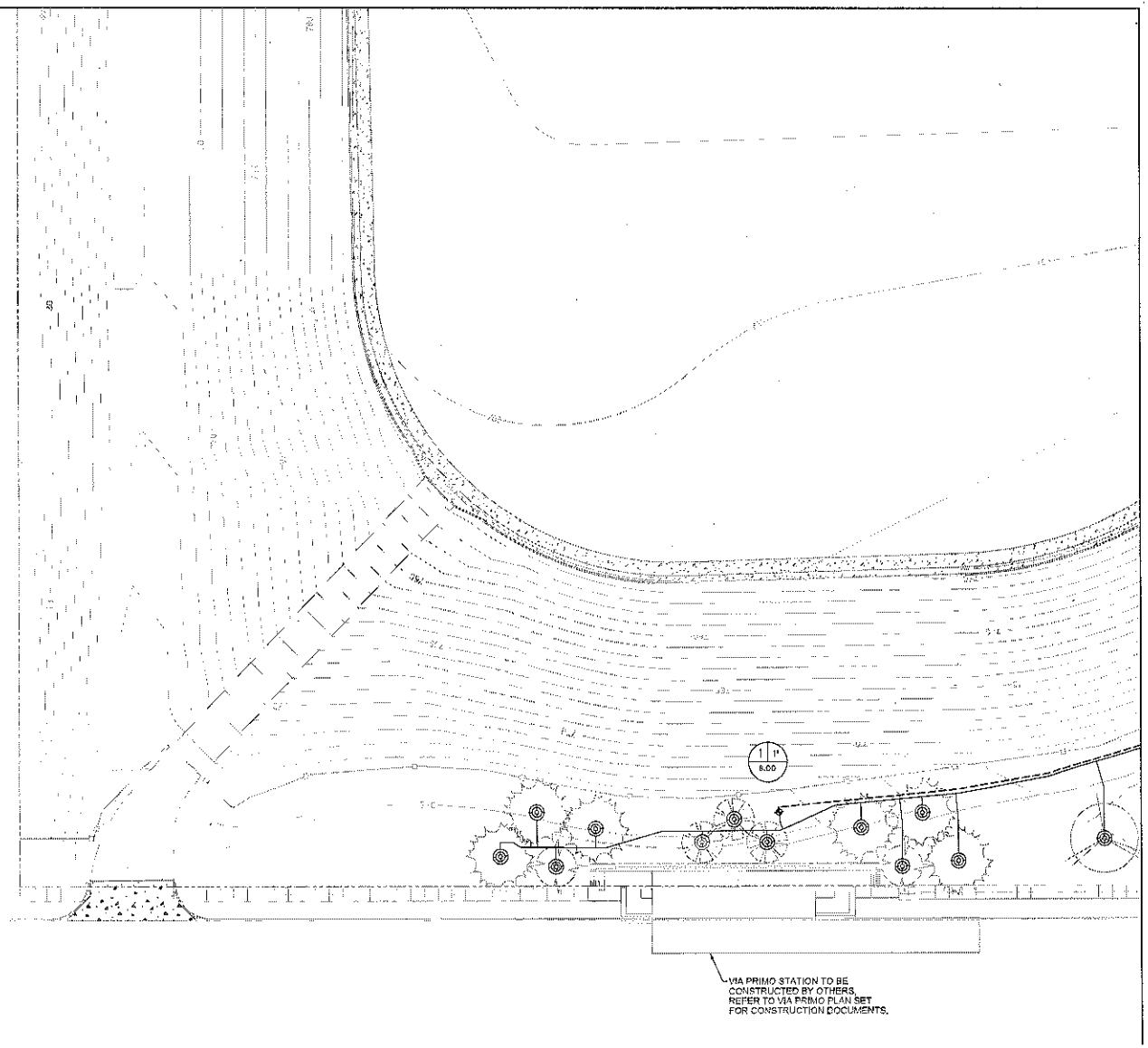

MATCHLINE SHEET C23.21

N

0' 20' 40'

1" = 40'

IRRIGATION LEGEND

- NETAFIM MODEL TLDL-0-18 TREE DRIP RING
- HUNTER I-CORE IC-1200-PP CONTROLLER W/ SOLAR SYNC WEATHER SENSOR.
- HUNTER ICV SERIES ELECTRIC REMOTE CONTROL VALVE W/ ASCM-SYNC AS-ADJ ADJUSTABLE PRESSURE REGULATOR. SIZE AS INDICATED ON PLAN.
- 2" WATER METER (BY OTHERS)
- 2" NIBCO T-113-K ISOLATION GATE VALVE
- 2" WILKINS SERIES "S" Y-STRAINER VALVE
- 2" FEBCO SERIES 860 DOUBLE CHECK BACKFLOW PREVENTION DEVICE
- 2" HUNTER ICV MASTER VALVE
- 3" MAINLINE PIPING SDR 21, CLASS 200 PVC PIPE
- SDR 21, CLASS 200 PVC LATERAL PIPE SIZE AS INDICATED ON PLAN
- PIPE SLEEVES SCHEDULE 40 PVC SLEEVE SIZED 2" LARGER THAN PIPE SIZE

STATION NO. — VALVE SIZE

X | VA | 18.0

GALLONS PER MINUTE

NOTES:

1. SEE SHEET C23.25 FOR IRRIGATION NOTES.
2. SEE SHEET C23.31 FOR IRRIGATION DETAILS.

10-16-12

BEXAR COUNTY
FLOOD CONTROL DIVISION

NO.	DATE	DESCRIPTION	DWN	CHK

REVISIONS

LACOSTE PLACE PHASE 1B RESERVE - SAWS

IRRIGATION PLAN

HALFF

300 EAST SONTERRA BLVD., SUITE 230
SAN ANTONIO, TEXAS 78258-3991
TEL (210) 705-1895
FAX (210) 705-1896
TBPE FIRM REGISTRATION #312

DSN: TLF		SHEET NO.	C23.24
CHK DSN: TLF			
DWG:	STATE	COUNTY	
CHK DWG:	TEXAS	BEXAR	24 OF 31

10/18/2012 11:50:43 AM sbc2550 HALFF W:\SAN\C70\06\027905\CADD\Sheets\SAN\LS 07_LARRIS\C23\C23-25.dgn PDF_2D_MON_HW_300.pdf

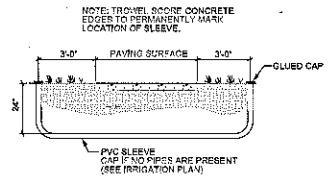

IRRIGATION SLEEVE DETAIL 3

SCALE: NTS

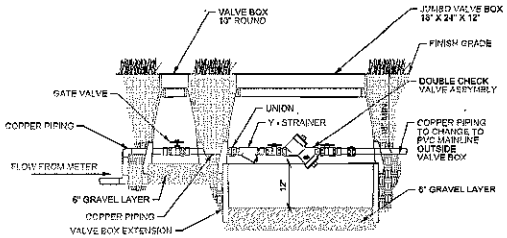

DOUBLE CHECK VALVE ASSEMBLY, Y-STRAINER & ISOLATION VALVE 5

SCALE: NTS

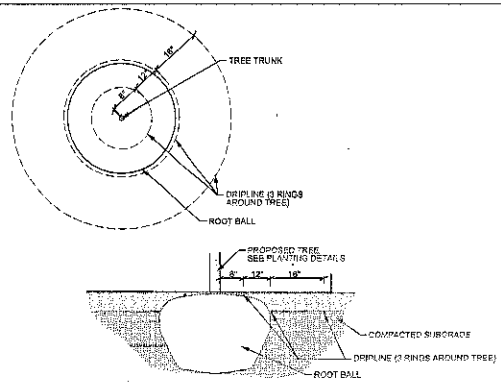

TREE DRIP LINE IRRIGATION DETAIL 2

SCALE: NTS

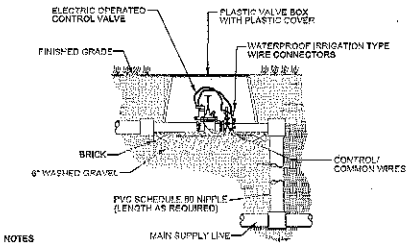

NOTES

1. ALL WIRE TO BE INSTALLED PER LOCAL CODE.
2. TAPE AND BUNDLE WIRE EVERY TEN FEET.
3. PROVIDE EXPANSION COILS AT EACH WIRE CONNECTION IN VALVE BOX. WRAP AROUND 1/2" PIPE 15 TIMES.
4. COMPACT SOIL AROUND VALVE BOX TO SAME DENSITY AS UNDISTURBED ADJ. SOIL.
5. INSTALL VALVES IN CLOSE PROXIMITY TO ADJACENT WALKS WHERE POSSIBLE
6. ORIENT RECTANGULAR VALVE BOXES PARALLEL TO ADJACENT WALKS, CURBS, ETC.
7. INSTALLATION OF BALL VALVES WILL BE SIMILAR TO INSTALLATION FOR CONTROL VALVES.

ELECTRONIC CONTROL VALVE DETAIL 4

SCALE: NTS

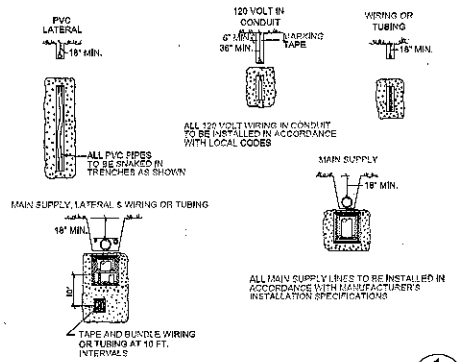

TRENCHING DETAIL 1

SCALE: NTS

10-16-12

BEXAR COUNTY
FLOOD CONTROL DIVISION

NO	DATE	DESCRIPTION	DWG	CHK
		REVISIONS		

LARGE PLACE PHASE III 2007 - 9A.3

IRRIGATION DETAILS

HALFF

350 EAST SONTERRA BLVD., SUITE 230
SAN ANTONIO, TEXAS 78258-3991
TEL (210) 798-1865
FAX (210) 798-1880
TBPE FIRM REGISTRATION #312

DSN: TLF		SHEET NO.	C23.31
CHK DSN: TLF			
DWG:	STATE	COUNTY	
CHK DWG:	TEXAS	BEXAR	31 OF 31

10/16/2012 11:51:38 AM 8/7/2012 HALFF W:\SAN\27000\0\27970\CADD\Sheets SANILE.BF_LARRIGCHB\PLS_27970.dgn PDF_3D_NON_IRR_300.pdf

Electrical Design Plan

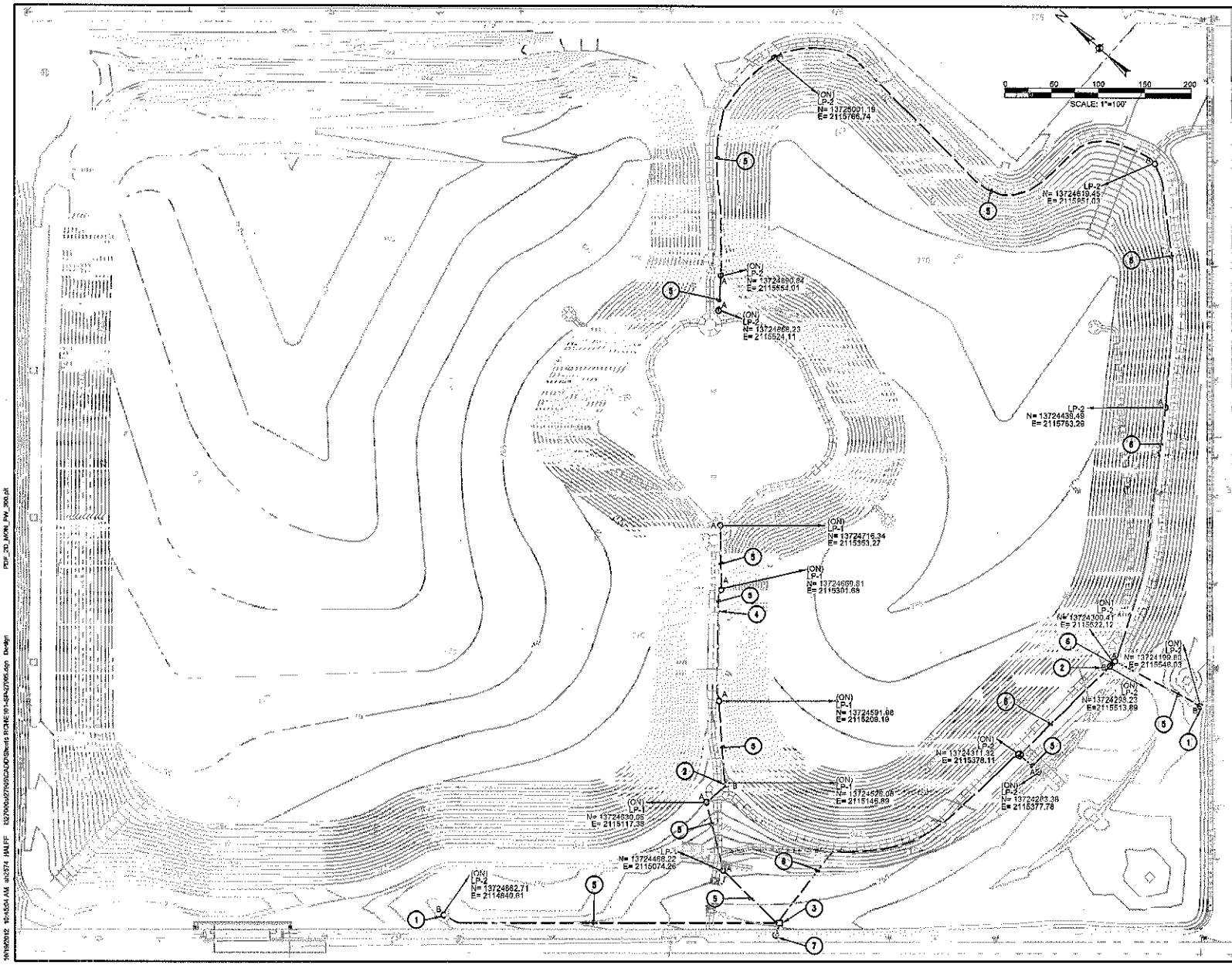

GENERAL ELECTRICAL NOTES

A. REFERENCE C24.02, C24.03 AND C24.04 FOR ELECTRICAL NOTES, SYMBOLS, AND SCHEDULES.

LEGEND NOTES

1. INSTALL WELL LIGHT 3 FT. FROM BASE OF SIGN ON CENTER. TILT FIXTURE 15 DEGREES IN WELL TOWARDS SIGN TO ILLUMINATE FACE OF SIGN.
2. INSTALL WELL LIGHT 18 INCHES FROM BASE OF SIGN ON CENTER. TILT FIXTURE 5 DEGREES IN WELL TOWARDS SIGN TO ILLUMINATE FACE OF SIGN.
3. PROPOSED LOCATION FOR PAD MOUNTED ELECTRICAL SERVICE EQUIPMENT ENCLOSURE
4. CONDUIT TO RUN ALONG UNDERSIDE OF BRIDGE HERE REFER TO C27.11 FOR ATTACHMENT DETAILS.
5. 2 #10, 1 #10G, IN 3/4" C
6. 2 #8, 1 #10G, IN 1" C
7. PROPOSED LOCATION OF CONNECTION TO ELECTRIC UTILITY.

LEGEND:

OA	BOLLARD LIGHT. REFER TO LIGHT FIXTURE SCHEDULE
OB	WELL LIGHT. REFER TO LIGHT FIXTURE SCHEDULE
—	ELECTRICAL CONDUIT

STATE OF TEXAS
PHILLIP R. APPLEBAUM
68404
REGISTERED PROFESSIONAL ENGINEER
10-18-2012

The seal appearing on this document was authorized by PHILLIP R. APPLEBAUM, PE# 68404 on 10-18-2012. Alteration of a sealed document without proper notification to the responsible engineer is an offense under the Texas Engineering Practice Act. The record copy of this drawing is on file at the offices of Halff Associates, Texas 75081, TBPE FIRM #F-312

BEXAR COUNTY
FLOOD CONTROL DIVISION

NO.	DATE	DESCRIPTION	DWG	CHK
		REVISIONS		

TASSLE FLOOD PHASE II RSWP - SA3

ELECTRICAL SITE PLAN

HALFF
300 EAST SONTERRA BLVD., SUITE 230
SAN ANTONIO, TEXAS 78258-3991
TEL (210) 706-1906
FAX (210) 706-1906
TBPE FIRM REGISTRATION #312

DSN: HL & RR		SHEET NO.	C24.01
CHK: RJB			
DWG:	STATE	COUNTY	
CHK:	TEXAS	BEXAR	1 OF 5

10/18/2012 10:45:04 AM ak2574 HALFF 102700\027\50\CAD\Sheets RCNE101-SPA27095.dgn Dwg\
PDF_2D_MON_FM_300.pll

PANELBOARD SCHEDULE: "LP"

DESIGNATION	FEEDER NO.	POLES & AMPS	LOAD VA LTG.	LOAD VA RECPT.	LOAD VA OTHER	CK	PH	CK	LOAD VA LTG.	LOAD VA RECPT.	LOAD VA OTHER	POLES & AMPS	FEEDER NO.	DESIGNATION
TRAIL LIGHTING	2	1/20	200			1	A	2						
TRAIL LIGHTING	2	1/20	410			3	C	4						
						5	A	6						
						7	C	8						
						9	A	10						
						11	C	12						

CATEGORY	CONN. LOAD KVA	CONN. LOAD AMPS	DESIGN LOAD DIV.	DESIGN LOAD KVA	DESIGN LOAD AMPS
LIGHTING:	0.6	2.5	1.25	0.8	3.2
RECEPTACLE:	0.0	0.0	1.00	0.0	0.0
MOTORS:	0.0	0.0	1.00	0.0	0.0
FESTIVAL RECEPTACLES.:	0.0	0.0	1.00	0.0	0.0
ELECTRIC HEATING:	0.0	0.0	1.00	0.0	0.0
WATER HEATING:	0.0	0.0	1.00	0.0	0.0
TOTAL:	0.6	2.5		0.8	3.2

MOUNTING:	SURFACE
VOLTS:	120/240
PHASE/WIRE:	1/3
MAINS SIZE:	60A
MAINS TYPE:	60A
BUSS TYPE:	COPPER
BRKR TYPE:	BOLT-ON
A.I.C. (RMS):	22,000A
A Phase	0.2Connected Kva
C Phase	0.4Connected Kva

REMARKS SEE PLAN FOR FEEDER DETAILS

FEEDER NO.:
1= 2 #10, 1 #10G, IN 3/4" C
2= 2 #8, 1 #10G, IN 1" C

A.I.C RATINGS ESTIMATED BASED ON EQUIPMENT LOCATION / CALCULATED LOAD / EQUIPMENT SIZE; COORDINATE AND VERIFY ACTUAL SHORT-CIRCUIT AVAILABLE THROUGH NEW SERVICE EQUIPMENT WITH ELECTRIC UTILITY CO. (REF. GENERAL ELECTRICAL NOTES, THIS SHEET).

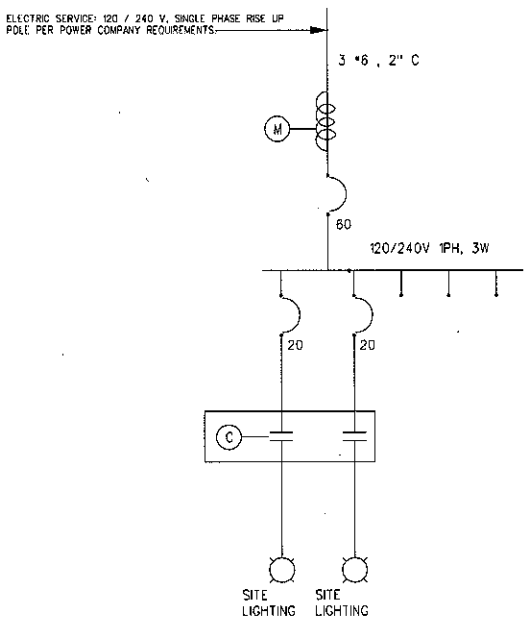

02 ONE LINE DIAGRAM
NO SCALE

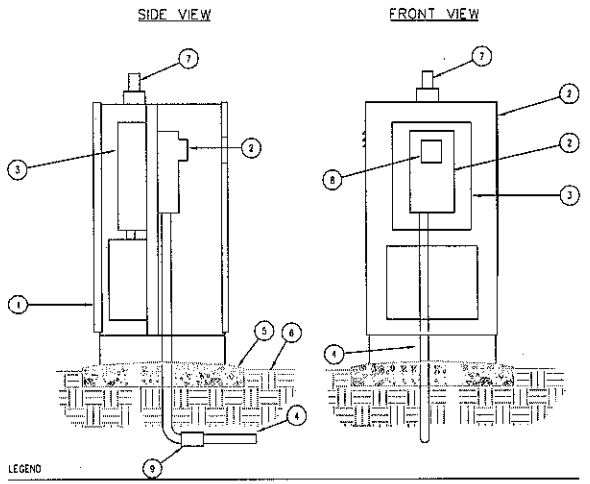

LEGEND

1. EQUIPMENT ENCLOSURE: MILBANK MODEL CP3B-110A22SL1 RING TYPE OR RINGLESS DEPENDING ON UTILITY REQUIREMENTS WITH 8"x8" METER VIEWING WINDOW OR APPROVED EQUAL.
2. UTILITY CO. METER ENCLOSURE.
3. PANEL AND LIGHTING CONTACTOR.
4. CONDUIT FOR UTILITY CO. SERVICE.
5. POURED CONCRETE BASE - 6" MIN. THICKNESS - EXTEND 6" BEYOND OUTSIDE DIMENSIONS OF ENCLOSURE WITH 1/2X SLOPE FOR DRAINAGE.
6. FINISH GRADE.
7. PHOTOCELL.
8. METER READING WINDOW.
9. COUPLING AT 90 DEGREE ELBOW

01 EQUIPMENT ENCLOSURE
SCALE: N.T.S.

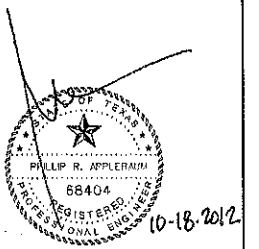

The seal appearing on this document was authorized by PHILLIP R. APPLEBAUM, PE# 68404 on 10-18-2012. Alteration of a sealed document without proper notification to the responsible engineer is an offense under the Texas Engineering Practice Act. The record copy of this drawing is on file at the offices of Halff Associates, Texas 75081, TBPE FIRM #F-312

BEXAR COUNTY
FLOOD CONTROL DIVISION

NO	DATE	DESCRIPTION	DWN	CHK

LADDER FLAT PHASE BRSWF - 9x6

ELECTRICAL NOTES AND SCHEDULES

HALFF
300 EAST SONTERRA BLVD., SUITE 230
SAN ANTONIO, TEXAS 78258-3991
TEL (210) 798-1885
FAX (210) 798-1801
TBPE FIRM REGISTRATION #312

DSN: H.A.R.
DRN:
CHK: R.J.B.
DWG:

SHEET NO. C24.02

STATE	COUNTY
TEXAS	BEXAR

2 OF 5

10/18/2012 10:44:04 AM en3574 HALFF ec27009a\27969\CAD\Sheets RCH\E201-SN-27969.dgn Dwg\n PDF_2D_MON_PN_300.dll

LIGHT FIXTURE SCHEDULE			
TYPE	MANUFACTURER / CAT. NO.	LAMPS	DESCRIPTION AND REMARKS
A	KIM VRB1C-20L-3K	LED (IES TYPE V)	ROUND BOLLARD WITH DOMED TOP, VANDAL RESISTANT, CONCRETE SHAFT
B	KIM 6360-NF-70PMH-LT10-PL10	70W PMH	COOL LENS WELL LIGHT, NARROW FLOOD OPTICS, PRISMATIC LENS, FIXTURE TO TILT UP TO 15 DEGREES WITHIN WELL

Reset Form

KIM LIGHTING

Cool-Lens Well Light 6360

Pulse Start Metal Halide / High Pressure Sodium

revision 2/13/11 • 6360.pdf

Type:
Job:
Fixture Catalog number:

6360 / / / /
Fixture | Optics | Lamp Mask (See page 2) | Optional Primary Lens (See page 3) | Optional Secondary Lens (See page 4)

Approvals:

Date:
Page: 1 of 5

Specifications

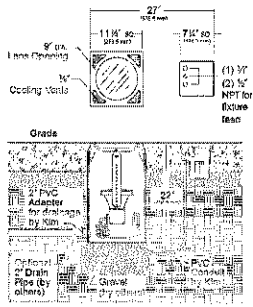

Hubbell Lighting, Inc.

Lamp Housing: Die cast free flang housing with porcelain enamel base coated. 40V radio noise. Corrosion compound clear glass lens.

Reflector: Spun specular Alzak® aluminum. Available in spot or narrow flood beam spreads. Easily removed for PAR lamps if desired.

Gasketing: Silicone gaskets used throughout.

Fixture Cord: 6' long #16-3 with 200°C silicone wire leads protected by a 200°C teflon braided sleeve water resistant cord approved for outdoor use. Provided to fixture through silicone grommet.

Support Brackets: Cast bronze fixture support ring with stainless steel support brackets and hardware.

Well: 12¾" diameter x 40½" wall x 20" depth hybrid PVC pipe. Lens frame adapter constructed from high temperature, SMC compression molded, fiberglass impregnated, heavy wall composite. Charcoal gray.

Lens Frame: One piece cast bronze, natural finish. Four captive ⅜" thumbscrew stainless steel hex socket cap screws. ⅜" wide integral cooling vents on each corner meet ADA requirements.

Primary Lens: Tempered clear glass lens 9" dia. x ¾" thick, flush with lens frame, slightly recessed.

Optional Low-Temperature Secondary Lens: Constructed of borosilicate glass with a hard, fire uniform dichroic coating. Reflects infrared (heat) away from the recessed primary lens, but transmits visible rays through. See page 5 - Lens Temperature Chart.

Optional Slip-Resistant Primary Lens: Tempered clear glass lens with four ⅜" wide impregnate radial rings, flush with lens frame, slightly recessed.

Ballast: High power factor -20°F starting, mounted on tray. 120 volt line 347 volt chamber.

Ballast Box: High temperature, SMC compression molded fiberglass impregnated heavy wall construction. Wall separates ballast chamber from splice compartment, yellow zone 32 cu.in., provided, one-spline plugs to and from ballast chamber. Conduit entry two ¾" NPT for through wiring, one ¾" NPT for fixture supply.

Ballast Cover: Cast bronze, natural finish. Four captive, hardened stainless steel hex socket cap screws.

Listings and Ratings		
UL or UL 1598[1]	–	25C Ambient
IP68 Rated	CE	IND 9001:2000

[1] Details for wet locations

© 2011 KIM LIGHTING INC. • P.O. BOX 51265, CITY OF INDUSTRY, CA 91716-1265 • TEL: 626-968-7888 • FAX: 626-968-5698

KIM LIGHTING

VRB1C LED Round Bollard

Single Function, Vandal-Resistant, Concrete Shaft

revision 9/29/11 • kl_vrb1cled_spec.pdf

Type:
Job:
Catalog number:

VRB1C / / / /
Fixture | Electrical Module | Top Cap Finish | Concrete Shaft Finish | Option
(See page 2)

Approvals:

Date:
Page: 1 of 2

Specifications

VRB-LED Models
10 - 20 Diodes

VRB1C - Single Function Luminaire (Concrete Shaft)
Maximum weight: 115 lb

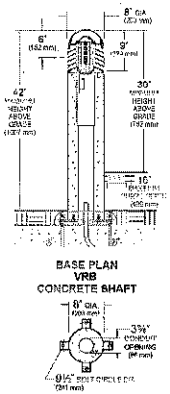

Hubbell Lighting, Inc.

Domed Top Cap: One-piece die-cast aluminum ⅛" minimum thickness, tapped to housing, concealed (or removal keyhole) bolts. For relamping access, allen screws shall not require complete removal.

Louvers: Aluminum die-cast with vertical support ribs at 90° intervals. Horizontal louver blades shall have a 1¾" depth, a 65° inclined plane and provide light source cutoff above horizontal. Louver assembly shall be secured to shaft by tamper-resistant screws.

Lamp Enclosure: One-piece tempered molded glass with internal flutes and full gasketing at bottom edge.

Socket: Porcelain medium base socket rated 90V for LED and incandescent. Plastic socket for fluorescent.

Fixture Hood: Allows for through wiring mount and shows the lamp enclosure.

Electronic Module: All electrical components are either UL or ETL recognized, mounted on a single plate and factory provided with quick disconnect plugs. Driver is rated for -40°F starting and has an 0-10V dimming interface for multi level illumination options.

Optical Module: Pure LED sculpted with a directional optic for maximum beam angle projecting through louver dark shielding. LED boards to be mounted to an anodized heat sinking heat sink extrusion. (Type I) two 10 LED boards for a total of 10 LED. (Type II) four 5 LED boards for a total of 20 LED. (Type III) four 5 LED boards for a total of 20 LED. Available in 3000K and 4100K color temperature.

Anchor Bolts: Four ½" x 12" + 2" hot dipped galvanized, each with five nuts, washers and a 12" power board template.

Material: Cement shall conform to current specifications for "Portland Cement" ASTM C150, Type I or II. Aggregates shall meet current requirements of "Specifications for Concrete Aggregates" ASTM C33. Water shall be mean and free from deleterious amounts of alkali, oil, acids, alkalies or organic materials. Wire for reinforcement shall conform to ASTM A185. Steel for hugs and plates shall conform to ASTM A36, or A283 grade D.

Surface: Medium sand blasted with anti-graffiti water repellent coatings. Available colors are Charcoal, Brown, Natural Clay or White. Integral in concrete mix.

Cure and Strength: Allow for completion of the hydration process and result in a 28 day compressive strength of not less than 4,500 psi.

Manufacture: Fiberglass molds used to insure uniform parts. Mold parting lines may be slightly visible in finished parts.

Anchorage: Blue steel mounting base for installation on four 16" x 10" + 2" zinc electroplated U-hook anchor bolts. Each anchor bolt is supplied with five nuts, two washers, and a rigid precast bound template.

Shipment: Palletized with adequate hold-downs to prevent load movement in transit. Palette.

Finish: TGIC thermoset polyester powder coat paint, 2.5 mil nominal thickness, applied over a titanated phosphate conversion coating. 2000 hour salt spray test exceeding rating. Standard colors are Black, Dark Bronze, Light Gray, Stealth Gray™, Platinum Silver, or White. Custom colors are available.

CAUTION: Fixtures must be grounded in accordance with national, state and/or local codes. Failure to do so may result in serious personal injury.

Listings and Ratings	
UL or ETL to UL Standards 1598 & 8750[1]	25C Ambient
IP68 Rated	P67 = Fully Gasketed[2]

[1] Details for wet locations
[2] Dark Sky Legislation Compliant

© 2011 KIM LIGHTING • P.O. BOX 51265, CITY OF INDUSTRY, CA 91716-1265 • TEL: 626-968-7888 • FAX: 626-968-5698

TEXAS REGISTERED PROFESSIONAL ENGINEER
PHILLIP R. APPLEBAUM
68404
10-18-2012

The seal appearing on this document was authorized by PHILLIP R. APPLEBAUM, PE# 68404 on 10-18-2012. Alteration of a sealed document without proper notification to the responsible engineer is an offense under the Texas Engineering Practice Act. The record copy of this drawing is on file at the offices of Halff Associates, Texas 75081, TBPE FIRM #F-312

BEXAR COUNTY
FLOOD CONTROL DIVISION

NO.	DATE	DESCRIPTION	DWN	CHK
		REVISION		

FARRIS FLACE ROAD IS ROUTE - BAD

ELECTRICAL NOTES AND SCHEDULES

HALFF
200 EAST SONTERRA BLVD., SUITE 250
SAN ANTONIO, TEXAS 78258-3391
TEL (210) 798-1895
FAX (210) 798-1896
TBPE FIRM REGISTRATION #312

DGN: HL & RS		SHEET NO.	C24.03
CHL CODE: RLB			
DWG:	STATE	COUNTY	
CHL DWG:	TEXAS	BEXAR	3 OF 5

10/18/2012 8:42:00 AM ak2574 HALFF PDF: 20_MON_FN_390.plt
PC:\Users\Public\Documents\Hubbell\KIM\CAD\Standards\PCW\E200-EN-27996.sgn Design