PRELIMINARY ENGINEERING REPORT
FOR

HARRY WURZBACH
TAPS MEMORIAL BLVD
PRELIMINARY ENGINEERING REPORT

Prepared for:

City of San Antonio

STATE OF TEXAS
MICHAEL C. RIOJAS
69690
REGISTERED PROFESSIONAL ENGINEER

The seal appearing on this document was authorized by MICHAEL C. RIOJAS P.E. 69690, on 10/29, 2013.

FORT SAM HOUSTON
TAPS Memorial Blvd

Prepared by:

S&B INFRASTRUCTURE, LTD.
Engineering Management Technology

Contract No. 40 - 05010 Harry Wurzbach TAPS Memorial Blvd

Draft Submittal

TABLE OF CONTENTS

Page

Section 1 **INTRODUCTION**…….…….. 1

1.1 Introduction / Background …….… 1

1.2 Scope of Project ……..……..…. 1

Section 2 **ANALYSIS OF EXISTING CONDITIONS**…… 3

2.1 Project Location …… 3

2.2 Existing Roadway Geometry and typical cross sections… 3

2.3 Traffic Engineering Study…… 3

2.4 Existing Alternative Transportation Modes……. 4

2.5 Existing Intersection and Roadway Lighting……. 5

2.6 Development in Project Area…… 5

2.7 Americans with Disabilities Act (ADA)……. 8

Section 3 **DRAINAGE** …… 9

Section 4 **DESIGN CRITERIA** ……. 10

4.1 Roadway Design Criteria ….…….……. 10

Typical Section

4.2 Traffic Design Criteria……. 10

4.3 Bicycle / Pedestrian Facilities…….. 11

4.4 School Requirements, Signs & Pavement Marking…….. 11

4.5 Design Alternatives …….…….…... 11

4.6 Construction Sequencing..…….…….…... 12

4.7 Right-Of-Way ……..…….…... 12

4.8 Preliminary Cost Estimate…….…….…... 13

Appendix A Project Location Map

Appendix B Existing/Proposed Typical Sections

Appendix C Existing Site Photos

Appendix D Drainage Report

Appendix E Traffic Analysis Report

Appendix F Design Summary Report (DSR)

Appendix G Bicycle Route Location Map

Appendix H Bus Route Location Map

Appendix I Preliminary Cost Estimate

1.0 INTRODUCTION

1.1 Introduction / Background

Over the last decade, the City of San Antonio has steadily grown in population. According to the recent U.S. Census data, San Antonio is now the second largest city in Texas with population of over 1.3 million. San Antonio's growth is a result of the creation of jobs to the area. One major job creator was the recommendations of the Defense Base Realignment and Closure Commission, which recommended and expansion of Fort Sam Houston by over 12,500 personnel and 46,000 military medical training students to the area. Currently, infrastructure improvements are being made to accommodate the growth at Fort Sam Houston East Gate along Interstate Highway 35. Harry Wurzbach/TAPS Memorial Boulevard which connects to the Fort Sam Houston north gate continues to experience delays due to installation's population growth. Harry Wurzbach/TAPS Memorial Boulevard connects Fort Sam Houston to Interstate Highway 410.

The Harry Wurzbach/TAPS Memorial Boulevard project is approximately 3.6 miles in length, from the Fort Sam Houston Installation Gate to IH410. The project is consistent with the San Antonio Bexar County Metropolitan Mobility Plan "Mobility 2035", but due to funding constraints the project remains unfunded. The project is also consistent with the San Antonio-Bexar County MPO Bicycle Master Plan which will be incorporated into the proposed construction plans. In 2011, a Programming Assessment was completed for Harry Wurzbach in order to secure funding for the approximate $67,000,000 construction cost. The project has not received funding to date.

The adjoining land usage along Harry Wurzbach consists of commercial development, residential, multifamily residential development, public library, churches, golf course, cemeteries and schools which all generate pedestrian traffic. Pedestrian facilities along the route vary from ADA compliant to none at all. The majority of the facility lacks compliant pedestrian facilities and connectivity to the transit system. This project will provide for ADA compliant pedestrian facilities with connectivity to the transit stops.

The City of San Antonio has two projects along the route under construction. The final configuration includes the two projects on Harry Wurzbach and have been incorporated into the schematic. The locations are at the intersection at Burr Road and from south of Winans intersection to north of the Rittiman intersection.

1.2 Scope of Project

The City of San Antonio has identified the need to improve mobility on Harry Wurzbach.

The project tasks to be performed consist of:

- Preliminary Engineering Report (PER)
- Preliminary engineering design (schematic layout)
- Field surveying
- Traffic Study Analysis

Preliminary construction cost estimates

Preliminary hydrology and hydraulic studies

Design Summary Report (DSR)

Bicycle and Pedestrian Facilities (ADA Compliance)

Drainage Analysis

Retaining Walls

2.0 ANALYSIS OF EXISTING CONDITIONS

2.1 Project Location

The project is located on the Northeast side of San Antonio in Bexar County, Texas. The project borders the eastern city limits of Terrell Hills and northwestern portion of Fort Sam Houston. The project length is approximately 3.6 miles long and starts at the Fort Sam Houston Scott Road gate and proceeds north and terminates at IH 410. This project provides a second direct access route from an interstate highway to Fort Sam Houston and the Fort Sam Houston National Cemetery. The route is also known as "TAPS Memorial Boulevard".

Major cross-streets include Rittiman Road, Austin Highway and Eisenhauer Road. Austin Highway does not have direct access to Harry Wurzbach. Austin Highway traffic must use Eisenhauer Road or private commercial driveways to access Harry Wurzbach. Rittiman Road and Eisenhauer Road have signalized intersections. Additional signalized intersections along Harry Wurzbach are at Lowes/HEB driveway (providing access to Austin Highway), Burr Road, Winans Rd (additional gate to Fort Sam Houston), Urban Crest Drive/Oakwell Court, Oakwell Farms Parkway and at Garner Middle School entrance.

The City of San Antonio is currently constructing improvements at two locations Harry Wurzbach at Burr and Harry Wurzbach at Rittiman. Both of these projects have been incorporated in the project schematic.

2.2 Existing Roadway Geometry and Typical Cross Sections

Currently, Harry Wurzbach is a four lane divided and undivided roadway with two twelve foot lanes in each direction. The roadway has a shoulder on the north bound lane from Fort Sam Houston Scott Gate to Rittimam and no shoulders for the rest of the project. The undivided section is from Fort Sam Houston Scott Gate to Rittiman Road. The divided section is from Rittiman Road to IH410. The divided section median varies from a raised median to depressed median and does incorporate left turn lanes at major intersections.

Harry Wurzbach's horizontal and vertical alignments alignment meets the 45 mph design speed and current AASHTO, guidelines. The curve between Oakwell Farms Parkway and Cripple Creek on the north end of the project incorporates super elevation in the cross slope when a normal crown will surface. The super elevation is creating water runoff and ponding issue at the right-of-way line.

2.3 Traffic Engineering Study

The separate traffic engineering report is included in Appendix E of this report.

2.4 Existing Alternative Transportation Modes

The alternate modes of transportation on Harry Wurzbach currently provides for pedestrian, transit and bicycle. The level of accommodation for the various modes varies though out the project.

Pedestrian facilities along the project vary greatly. There are no sidewalks from Fort Sam Houston Scott Gate to Rittiman Road. Pedestrian must walk along the grass slopes or the northbound shoulder. From Rittiman to Lynn Batts Lane sidewalks are limited to areas in front of newer commercial developments and do not provide continuous connectivity. From Lynn Batts Lane to the end of the project, there is a continuous sidewalk on the west side of the roadway but it does not meet current ADA requirements. On the east side of the road from Oakwell Farms Parkway to the end of the project, the City of San Antonio has constructed ADA compliant sidewalks to provide connectivity to Garner Middle School.

VIA Metropolitan Transit (VIA) operates two bus routes along Harry Wurzbach. Together routes 647 and 509 provide transit service for the entire project length. VIA has approximately 35 bus stop locations along Harry Wurzbach. Among the 35 bus stops, 13 have shelters with slabs for transit wheel chair ramps.

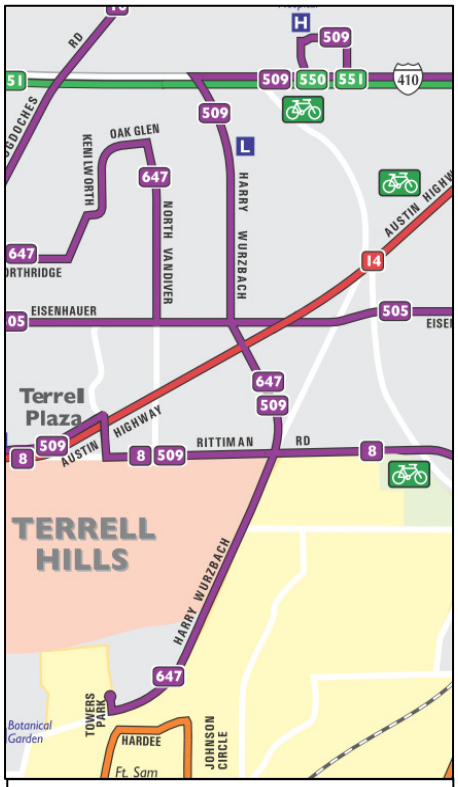

VIA System Map Excerpt along Harry Wurzbach

There are no dedicated bicycle facilities along Harry Wurzbach. Bicycle facilities along Harry Wurzbach are limited to joint usage of the vehicle travel lanes. Bicyclist use the shoulder between Rittiman and Harry Wurzbach for bicycling and very often are traveling in the wrong direction of traffic as shown in the photo to the right.

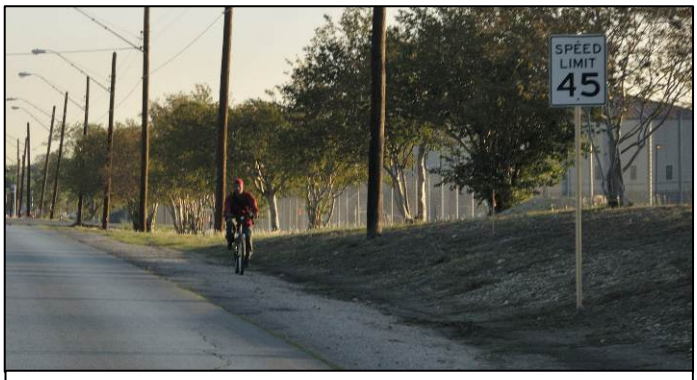

Photo of Bicyclist riding against Traffic on Harry Wurzbach

2.5 Existing Intersection and Roadway Lighting

There is continuous street lighting along the Harry Wurzbach route. The method of lighting varies with roadway section type. The undivided section from the Fort Sam Houston Scott gate to just south of Rittiman, lighting consists of long arm luminaries mounted on wood poles along the east side of the roadway at approximately 120' intervals.

The divided section of Harry Wurzbach lighting generally consists of dual long arm luminaries mounted on wood poles at approximately 170 intervals in the roadway median. An exception to the median poles in the divided section is from Northeast Parkway close to Eisenhauer Rd, where the short arm lighting is mounted on power poles along each side of the roadway at the right of way line.

Additional safety lighting is not placed at the signalized intersections.

2.6 Development in Project Area

The development along Harry Wurzbach consists of commercial development, industrial, residential, multi-family residential development, public library, churches, golf course, cemeteries, schools and military facilities.

From the Fort Sam Houston gate to Rittiman, the develop is military facilities, school, single family residential, multi-family residential, Fort Sam Houston golf course and the historic Fort Sam Houston National Cemetery.

From Rittiman to Eisenhauer Road the develop is more commercial and industrial with single and multi-family residential. Significant commercial development is located at Austin Highway.

From Eisenhauer Road to IH410, the adjoining development is predominately single family residential.
The commercial development along this section consists of planned unit development. St Pius X Catholic Church and school, Garner Middle School and Oakwell Library are all boardering Harry Wurzbach.

The following four images show the City of San Antonio zoning for properties along Harry Wurzbach from the northern end of the project at IH410 and proceed to the southern end of the project at Fort Sam Houston Scott Gate.

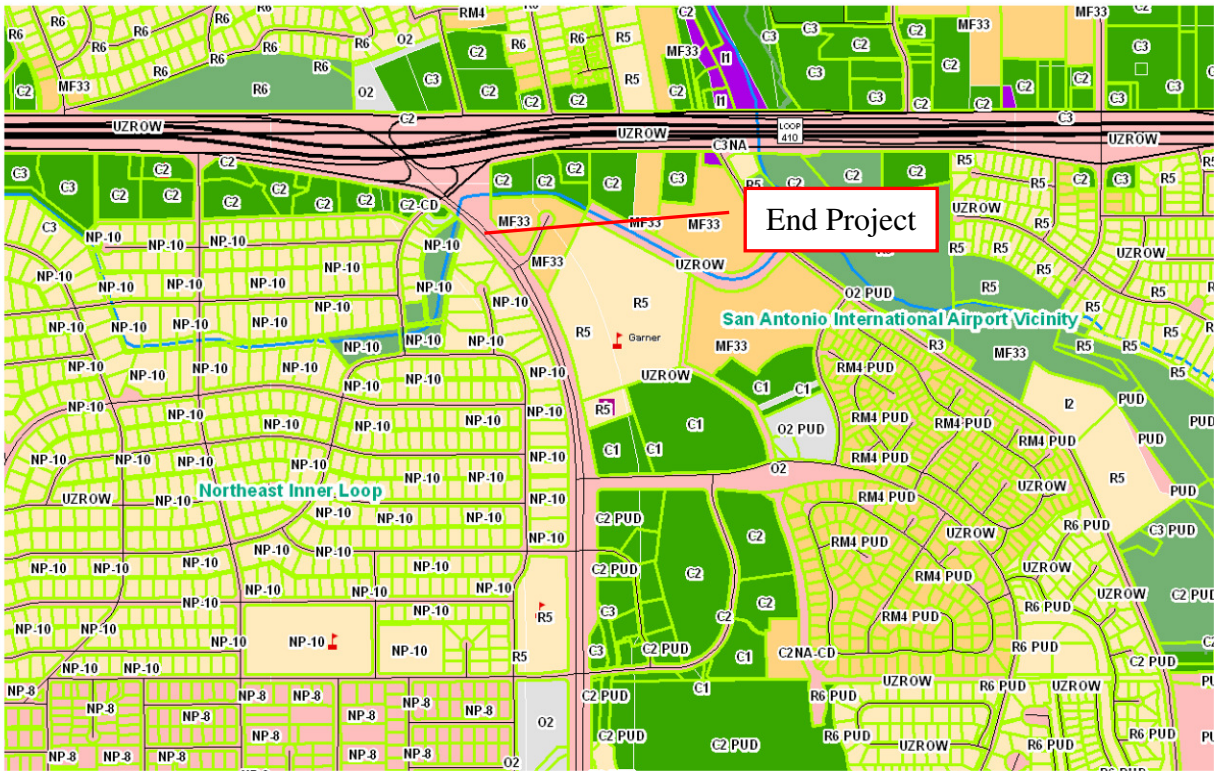

City of San Antonio Zoning along Harry Wurzbach Image 1 of 4

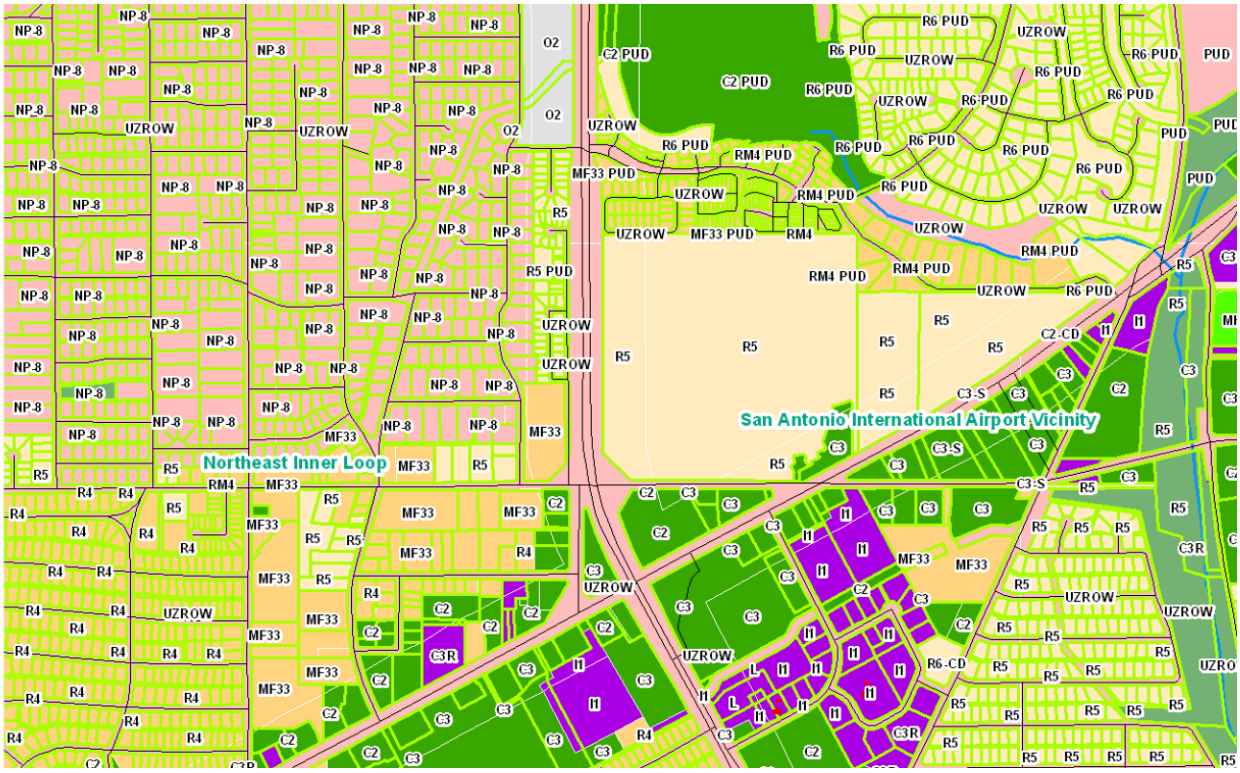

City of San Antonio Zoning along Harry Wurzbach Image 2 of 4

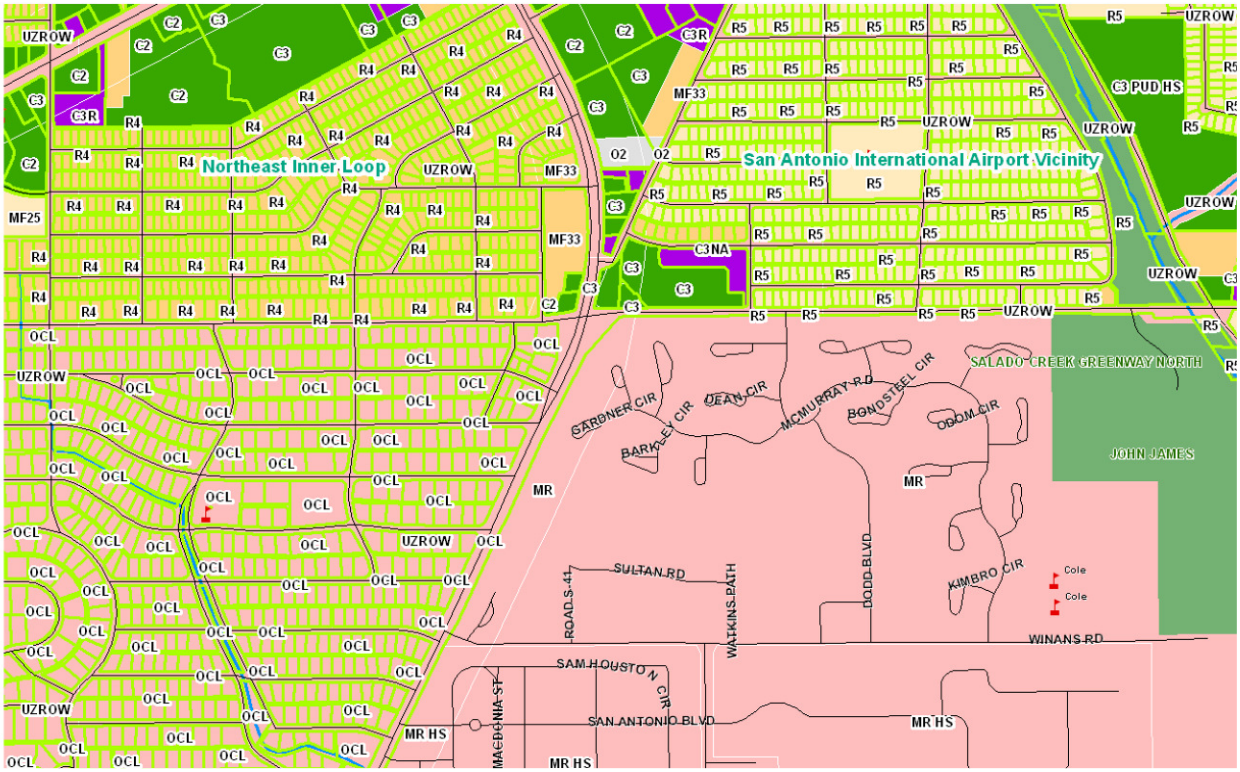

City of San Antonio Zoning along Harry Wurzbach Image3 of 4

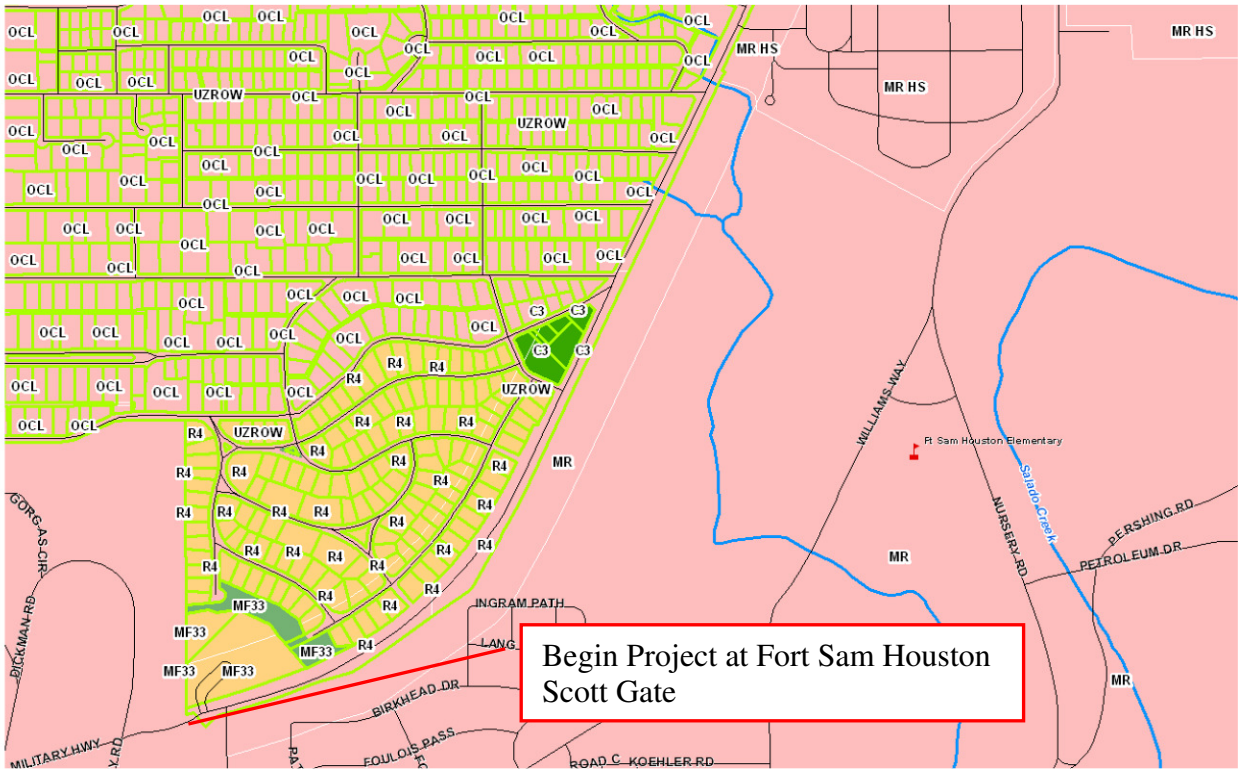

City of San Antonio Zoning along Harry Wurzbach Image 4 of 4

2.7 Americans with Disabilities Act (ADA)

ADA complaint facilities along Harry Wurzbach are limited to newer developed areas and new roadway upgrades. The City of San Antonio has constructed ADA compliant sidewalks to provide connectivity to Garner Middle School on the east side of Harry Wurzbach from Oakwell Farms Parkway to the end of the project. From Lynn Batts Lane to the end of the project, there is a continuous sidewalk on the west side of the roadway but it does not meet current ADA requirements. The project is in need of continuous ADA compliant facilities for pedestrians and transit users.

3.0 DRAINAGE

A drainage study for Harry Wurzbach was performed for the schematic designs and included in Appendix D.

4.0 ROADWAY DESIGN

4.1 Roadway Design Criteria

Harry Wurzbach is designated as a secondary arterial type A on the City of San Antonio Major Thoroughfare Plan and an Urban Principal Arterial on the San Antonio-Bexar County Metropolitan Planning Organization functional classification map. Harry Wurzbach is eligible for future federal funding and, in order, to maximize the funding opportunities and the design criteria will also meet federal funding requirements.

The design criteria will is based on the following:
American Association of State Highway and Transportation Officials 2004
City Of San Antonio Design Guidance Manual 2012
TxDOT Hydraulic Manual 2011
San Antonio Unified Development Code 2010

A Design Summary Report with the roadway design criteria used for the project is included in Appendix D. Harry Wurzbach will have two 12' lanes in each direction at a minimum. Turn lanes will be provide at intersections as recommended in the traffic analysis. In addition to the two vehicular lanes in each direction, a 5' bicycle lane will be added. The divided median will be maintained as much as possible. The design speed for Harry Wurzbach will be 45 mph. Sidewalks will be placed on both sides of the roadway and parking will not be incorporated into the proposed roadway section. Following is the typical section to be used for northern end of the project, which maintains the depressed median.

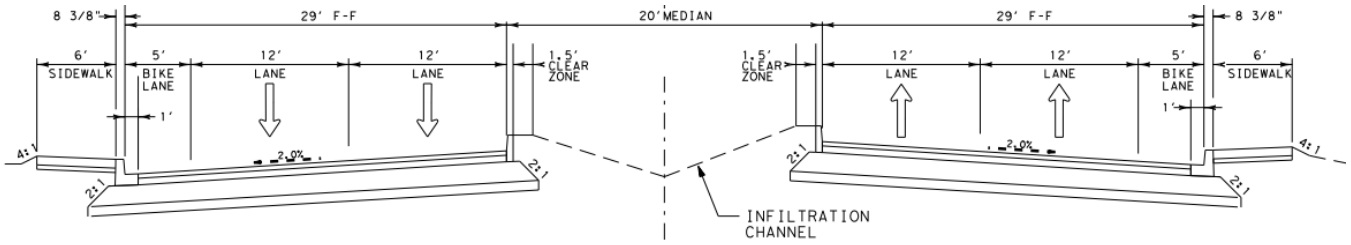

Depressed Median Section

See Appendix B for the proposed typical sections for the project length.

4.2 Traffic Design Criteria

Traffic engineering analysis and design parameters are included in the "Traffic Engineering Study" for Harry Wurzbach are included in Appendix E of this report.

4.3 Bicycle / Pedestrian Facilities

Harry Wurzbach will follow the Complete Streets design concepts and enable safe and convenient access for all users, including pedestrians, bicyclists, transit riders and vehicular riders. The sidewalks, bike lanes and vehicular lanes provide connectivity to all modes of transportation.

Sidewalks will be included on both sides of Harry Wurzbach. Right of Way width restrictions require the sidewalk to be adjoining to the back of curb. A wider 6' sidewalk will be used as per the Unified Development Code. To maintain consistency for pedestrian usage thoughout the project, a 6' sidewalk will be used in areas, where the sidewalk is separated from the back of curb. In front of schools, walking can be a social activity for students and a wider sidewalk is being placed along school walking routes. There are two schools adjoining Harry Wurzbach, Saint Pius Catholic School and Garner Middle School. A wider 8' sidewalk will be placed from Urban Crest/Oakwell Court to Garner Middle School on the west side of the road and from Urban Crest/Oakwell Court to Cripple Creek street. These limits of the wider sidewalk will also include the Oakwell Library location.

The San Antonio Bexar County Metropolitan Planning Organization (MPO) Bicycle Master Plan titled "City of San Antonio 2011 Bicycle Master Plan" has designated Harry Wurzbach as part of the bicycle network. The plan calls for Harry Wurzbach to be implemented with bicycle lanes. A section of Harry Wurzbach, from Rittiman Road to Burr Road is designated as a Tier 2 Priority Project.

To comply with the Master Plan, Harry Wurzbach will incorporate 5' bicycle lanes on both sides of the roadway through the length of the project for the entire length.

4.4 School Requirements, Signing and Pavement Markings

The two schools that adjoin Harry Wurzbach are Saint Pius Catholic School and Garner Middle School. Both schools have 20 mph school zones on Harry Wurzbach. The speed transition from the Harry Wurzbach posted speed limit of 45 mph is greater than 15 mph, therefore in accordance with Texas Administrative Code Title 43, Part 1, Chapter 25, Subchapter B, Section 25.23 a school buffer zone should be established to reduce the speed operating speed to 35mph prior to the 20 mph school zone. The buffer zone will be in operation for the same period as the school zones to allow motorist to travel at 45 mph when the school zones are not in effect.

Pavement marking for the school zones and crosswalks will established in addition to the normal roadway pavement marking for the roadway vehicular traffic and bicycle lanes.

4.5 Design Alternatives

The Eisenhauer Road intersection is over-capacity and functioning at a level of service F. The five-legged intersection and heavy left-turn movements observed, create excessive traffic delays for Harry Wurzbach. The proposed alternative incorporated into the schematic creates an underpass at Eisenhauer Road. The close proximity to the Austin Highway Underpass allows for the depressed grades to continue under Eisenhauer Road. This alternative will require ramps to be constructed south

of Austin Highway. The Austin Highway bridge outside spans will need to be removed and retaining wall to be placed in order for the ramps to remain within the existing right-of-way. The northbound exit ramp will continue past Austin Highway to provide access to Eisenhauer Road. The northbound ramp will continue back to Harry Wurzbach as an entrance ramp. The southbound exit ramp from Harry Wurzbach to Eisenhauer will align with the existing Old Harry Wurzbach alignment, providing continuity to Austin Highway. This alternative will allow for free flow of traffic along Harry Wurzbach through the Eisenhauer intersection.

4.6 **Construction Sequencing**

The construction of Harry Wurzbach is broken into logical sections. The sections are follows:

- Section 1 - South of Project at Fort Sam Houston Gate to South of Lyman Drive.
- Section 2 - South of Lyman Drive through Rittiman Road to south of Brynes Street.
- Section 3 - South of Brynes Street through Austin Highway and Eisenhauer Road to North of Eisenhauer Road.
- Section 4 - North of Eisenhauer Road to North End of Project just south of IH410.

Section 2 from South of Lyman Drive through Rittiman Road to south of Brynes Street, is currently under construction by the City of San Antonio. This section was not included in the PER and design schematic.

Section 3, from south of Brynes Street to North of Eisenhauer Road, should be the City of San Antonio's ***next priority section*** due to the traffic impacts this intersection has on the entire corridor. This section would include the construction of the Eisenhauer Road underpass, modification of the Austin Highway bridge and construction of ramps and access roads. The construction of the Eisenhauer Road underpass will be accomplished utilizing a multi-phase traffic control plan with multiple detours. The first phase of construction will consist of constructing the north bound ramp and access road, south bound ramp from Austin Highway and the modifications at Austin Highway. The second phase will be to construct the Eisenhauer Road bridge using multiple detours. The next phase will be the excavation and construction of the mainlanes under Eisenhauer and the remainder of the retaining walls. The final phase will be completing the final roadways and access roads, traffic signals, sidewalks and striping.

Section 4 from north of Eisenhauer Road to North End of Project just south of IH410, will be constructed in half sections throughout its project limits. The existing roadway will be used for two-way traffic while the new section is constructed. The new half section will be used with two way traffic while the remainder of the roadway is completed.

Section 1 from the south end of the project at Fort Sam Houston Gate to South of Lyman Drive, will also be constructed in half sections. Each half section will have two way traffic while the other half is completed. The final phase will consist of constructing medians, sidewalks and driveways as well as the final asphalt surface course.

4.7 Right-of-Way

The existing Harry Wurzbach right-of-way with varies from 95.23 feet at its narrowest section to 239.19 feet at its widest section. In order to accommodate the typical sections shown in the schematic

drawings, additional right of way will be required. A total of six parcels totaling 0.913 acres of additional right-of-way needed. Following is a summary of the parcels needed:

- Parcel 1 is on the west right-of-way line, between Terrell Rd and Elizabeth Rd. is an average of 13.2 feet wide and is needed to accommodate the new sidewalks and back slopes. Parcel 1 is residential property and totals 0.071 acres.
- Parcel 2 is on the west right-of-way line, between Tuttle Rd and Garraty Rd. is an average of 2.8 feet wide and is needed to accommodate the new sidewalks and back slopes. Parcel 2 is residential property and totals 0.009 acres.
- Parcel 3 is on the west right-of-way line, between Tuttle Rd and Garraty Rd. is an average of 2.8 feet wide and is needed to accommodate the new sidewalks and back slopes. Parcel 2 is residential property and totals 0.013 acres.
- Parcel 4 is on the west right-of-way line, between Sumner and Austin Highway is an average of 20 feet wide is needed to move the existing drainage channel to accommodate the new entrance ramp from Austin Highway. Parcel 4 is commercial property and totals 0.441 acres.
- Parcel 5 is on the east right-of-way line, between Northest Parkway and Austin Highway, is an average of 15 feet wide and is need to accommodate the new exit ramp to Austin Highway. Parcel 5 is commercial property and totals 0.298 acres.
- Parcel 6 is on the east right-of-way line between Austin Highway and Eisenhauer Road, is an average of 15 feet wide and is needed to accommodate the new access road between Austin Highway and Eisenhauer Road. Parcel 5 is commercial property and totals 0.081 acres.

4.8 Preliminary Cost Estimates

Preliminary construction cost estimates have been developed for the project based on the logical sections discussed in section 4.6 Construction Sequencing. The estimates for each section are as follows:

- Section 1 - South of Project at Fort Sam Houston Gate to South of Lyman Drive- Estimated construction cost is $24,902,000.
- Section 2 - South of Lyman Drive through Rittiman Road to south of Brynes Street - No estimate developed this section is currently under construction.
- Section 3 - South of Brynes Street through Austin Highway and Eisenhauer Road to North of Eisenhauer Road - Estimated construction cost is $22,861,000.
- Section 4 - North of Eisenhauer Road to North End of Project just south of IH410 - Estimated construction cost is $17,877,000.

The total preliminary construction estimate for Harry Wurzbach is $65,640,000. The preliminary construction cost estimates are included in Appendix I.

APPENDIX A

Project Location Map

END PROJECT
@ IH410

MacArthur Park

410

368

Sunset Memorial Gardens

Agudas Achim Memorial Gardens

Northridge Park

Haskin Pk

35

Wishire Terrace Park

Walzem Creek

RITTIMAN RD

RAILROAD

James Park

ALAMO HEIGHTS
Pop 6,502

TERRELL HILLS
Pop 4,592

Fort Sam Houston National Cemetery

HEIGHTS CITY

368

WURZBACH

PACIFIC

SALADO CREEK

HARRY

FORT SAM HOUSTON

University of The Incarnate Word

RIVER

Brackenridge Park

San Antonio Country Club

Belmeade Pk

UNION

San Antonio Botanical Garden

Brooke Army Medical Center

Mahnke Park

78

BEGIN PROJECT
FORT SAM HOUSTON
GATE

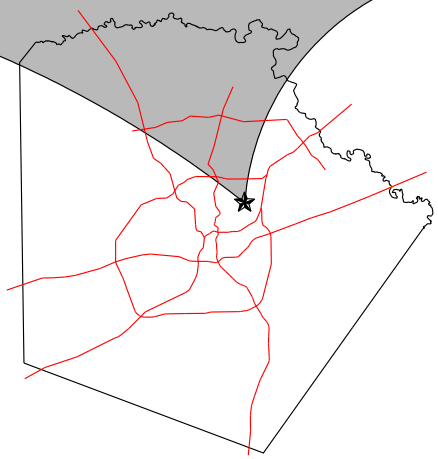

S&B INFRASTRUCTURE, LTD.
Engineering Management Technology

LOCATION MAP
HARRY WURZBACH

DRAWN BY: BP	DATE:	SCALE: 1" = 3500'
CHECKED BY: MCR	DATE:	PROJECT NO:
APPROVED BY:	DATE:	

FED. RD. DIV. NO.	FEDERAL AID PROJECT NO.	SHEET NO.
6		1

STATE	DIST.	COUNTY
TEXAS	SAT	BEXAR

CONT.	SECT.	JOB	HIGHWAY NO.
			CS

N:\PROPOSAL\PU1679- SanAnt Wurzbach*Memorial\07 Graphics\HWURZTAPS-LOC.dgn

APPENDIX B

Existing / Proposed Typical Sections

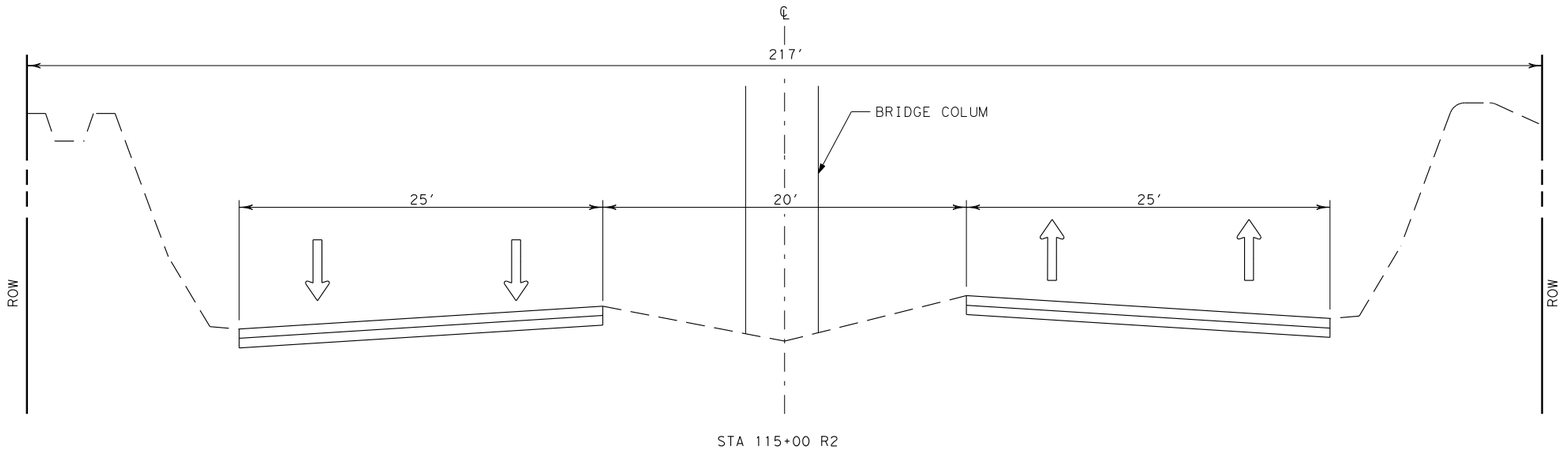

STA 115+00 R2

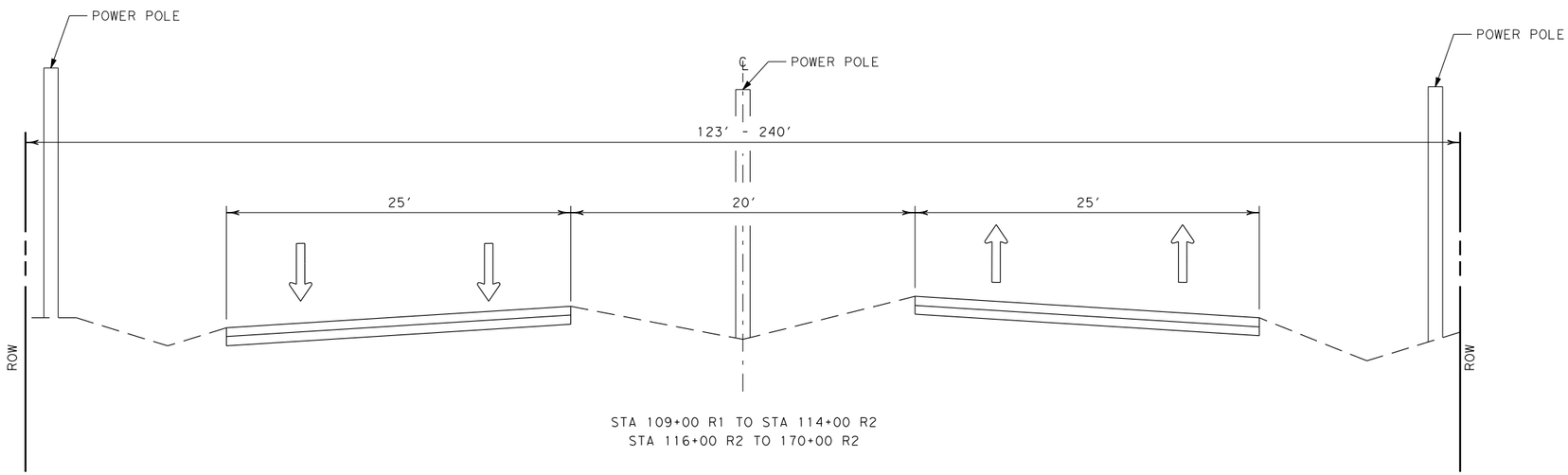

STA 109+00 R1 TO STA 114+00 R2
STA 116+00 R2 TO 170+00 R2

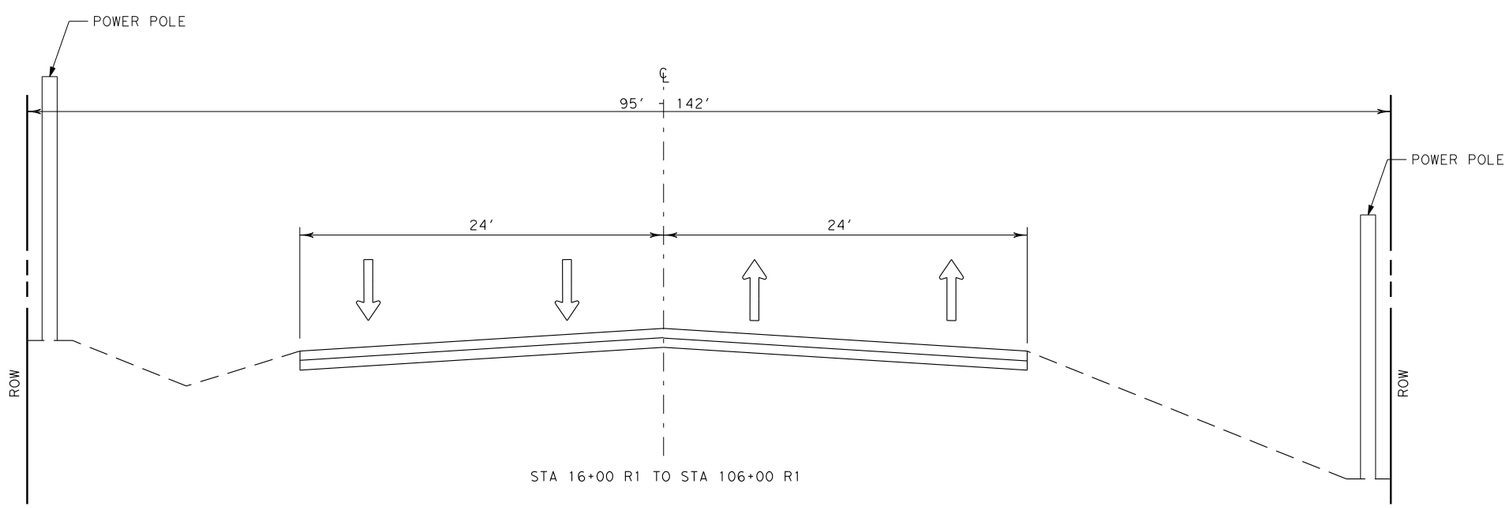

STA 16+00 R1 TO STA 106+00 R1

PRELIMINARY

SUBJECT TO REVISION

This document is released for the purpose of interim review only under the authority of:

EDUARDO A. CASTILLO

P.E. 98242 on 2/22/2011

It is not to be used for bidding, construction, or permit purposes.

REV. NO.	DATE	DESCRIPTION	BY

S&B INFRASTRUCTURE LTD.
Engineering • Management • Technology
TX PE FIRM # 1582
5805 CALLAGHAN RD.
SUITE 202
SAN ANTONIO, TX 78228
PHONE: 210.706.5800
FAX: 210.706.9233
WWW.SBINFRA.COM

CITY OF SAN ANTONIO
CAPITAL IMPROVEMENTS MANAGEMENT SERVICES DEPARTMENT

HARRY WURZBACH
TAPS MEMORIAL BLVD
EXISTING TYPICAL SECTION

SHEET 1 OF 2

95% SUBMITTAL	PROJECT NO.: U1679	DATE:2/22/2011
DRWN. BY:BRP	DSGN. BY:EAC / CHKD. BY:MCR	

2/22/2011 10:07:57 AM
n:\project\U1679\DESIGN\Dgn\1679SRTS01.dgn

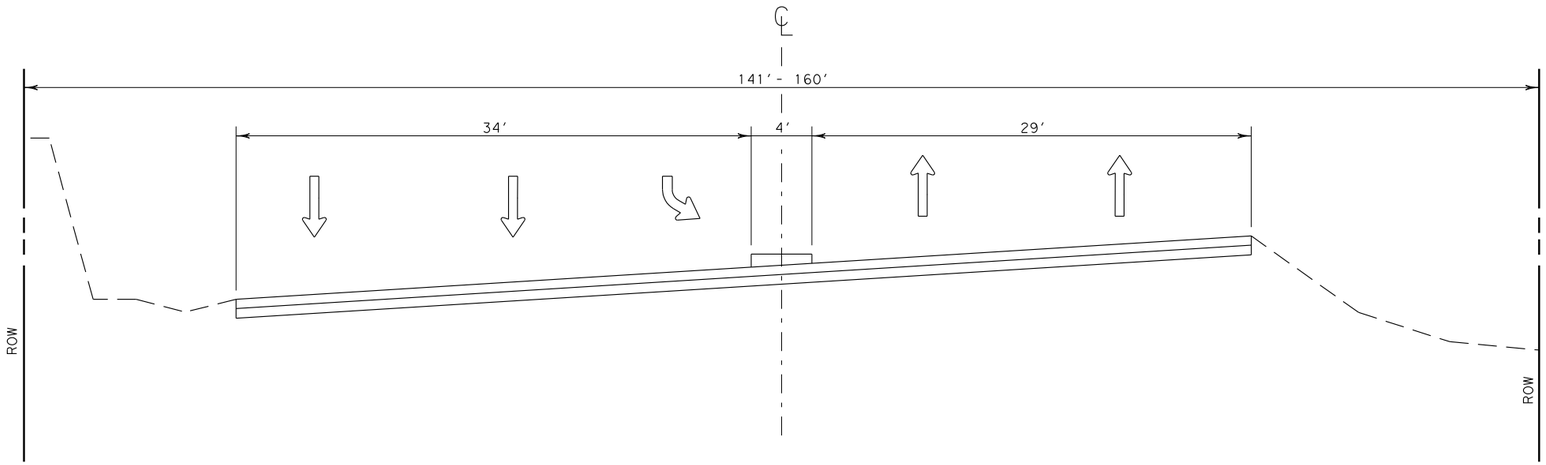

STA 188+00 R2 TO STA 193+00 R2

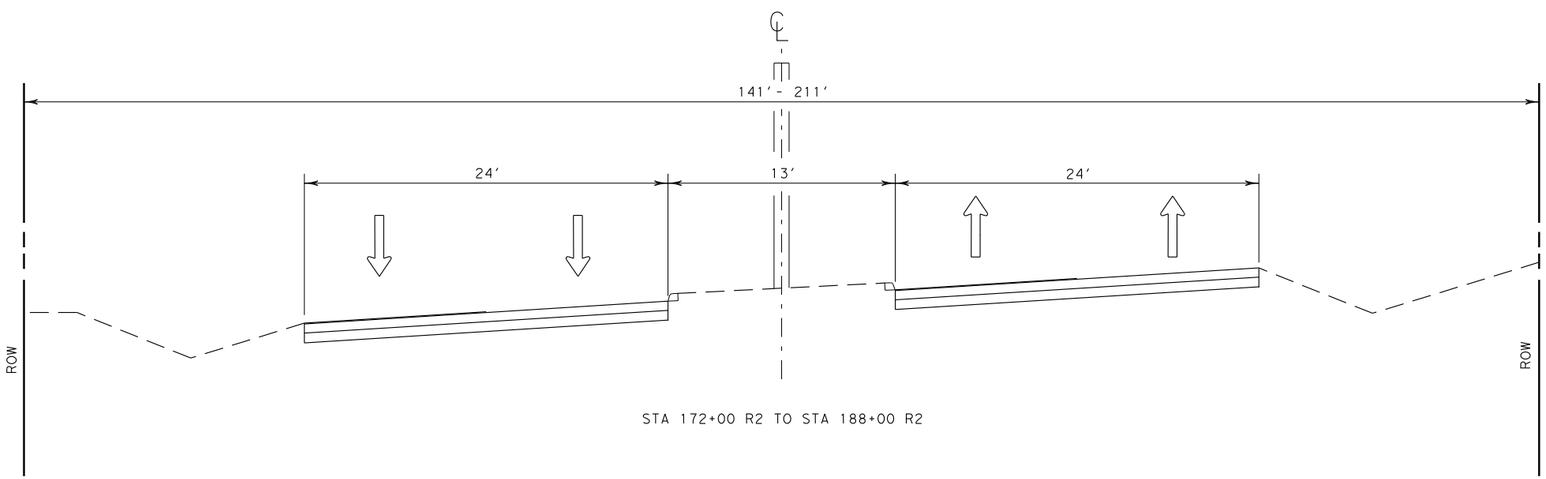

STA 172+00 R2 TO STA 188+00 R2

PRELIMINARY

SUBJECT TO REVISION

This document is released for the purpose of interim review only under the authority of:

EDUARDO A. CASTILLO

P.E. 98242 on 2/22/2011

It is not to be used for bidding, construction, or permit purposes.

REV. NO.	DATE	DESCRIPTION	BY

S&B INFRASTRUCTURE, LTD.
Engineering ◆ Management ◆ Technology
TX PE FIRM # 1582
5805 CALLAGHAN RD.
SUITE 202
SAN ANTONIO, TX 78228
PHONE: 210.706.5800
FAX: 210.706.9233
WWW.SBINFRA.COM

CITY OF SAN ANTONIO

CAPITAL IMPROVEMENTS MANAGEMENT SERVICES DEPARTMENT

HARRY WURZBACH
TAPS MEMORIAL BLVD
EXISTING TYPICAL SECTION

SHEET 2 OF 2

95% SUBMITTAL	PROJECT NO.: U1679		DATE:2/22/2011
DRWN. BY:BRP	DSGN. BY:EAC	CHKD. BY:MCR	

2/22/2011 10:08:21 AM
n:\project\U1679\DESIGN\Dgn\1679SRTS01.dgn

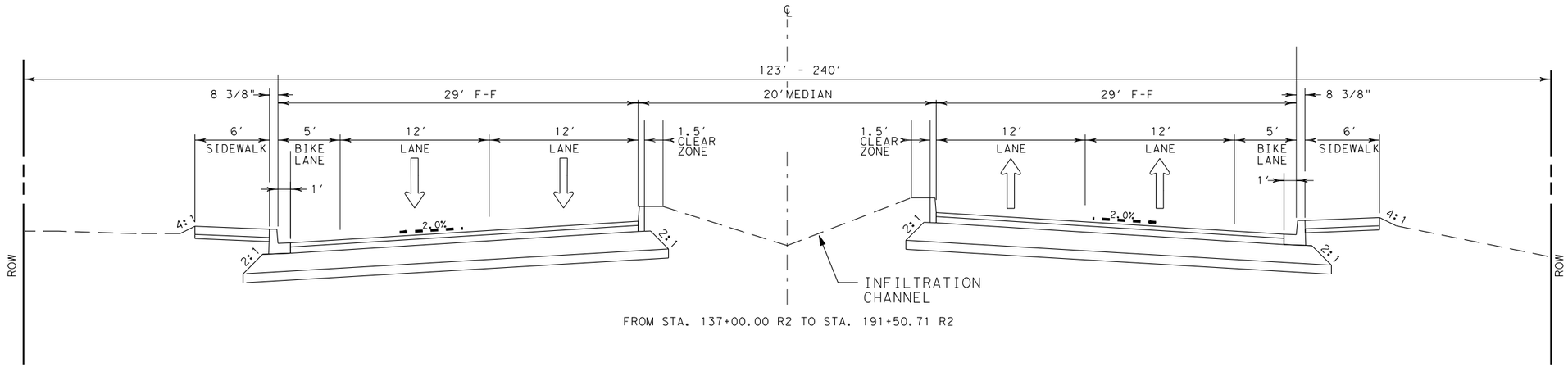

FROM STA. 137+00.00 R2 TO STA. 191+50.71 R2

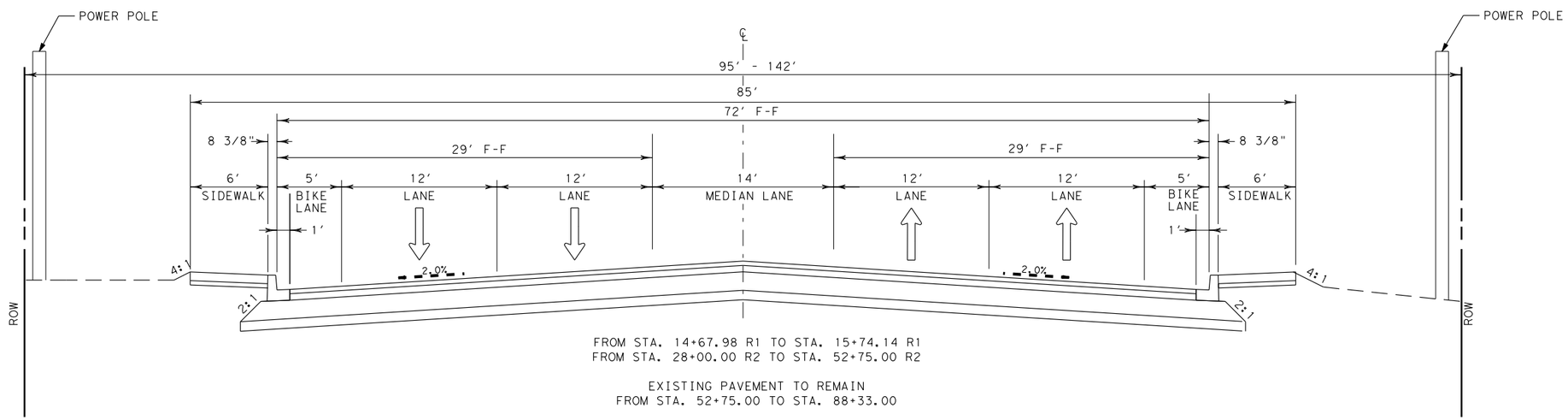

FROM STA. 14+67.98 R1 TO STA. 15+74.14 R1
FROM STA. 28+00.00 R2 TO STA. 52+75.00 R2

EXISTING PAVEMENT TO REMAIN
FROM STA. 52+75.00 TO STA. 88+33.00

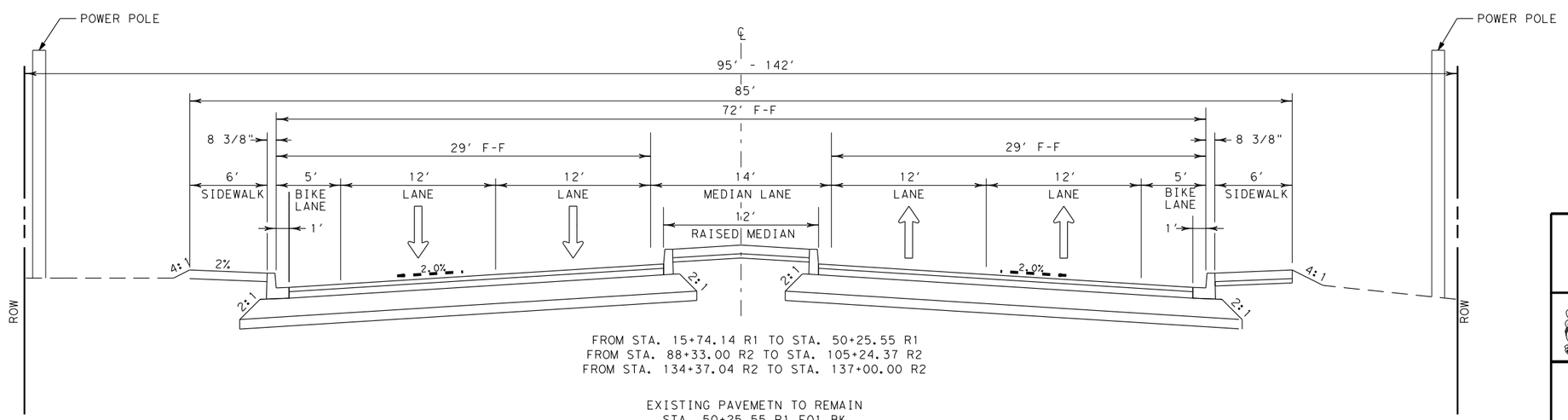

FROM STA. 15+74.14 R1 TO STA. 50+25.55 R1
FROM STA. 88+33.00 R2 TO STA. 105+24.37 R2
FROM STA. 134+37.04 R2 TO STA. 137+00.00 R2

EXISTING PAVEMETN TO REMAIN
STA. 50+25.55 R1 EQ1 BK
EQ1 AH STA. 16+00 R2 TO STA. 28+00 R2

TRANSITION PAVEMENT
STA. 14+67.68 R1 TO STA. 16+42.59 R1
STA. 50+96.14 R1 TO STA. 52+75.00 R1
STA. 88+32.95 R2 TO STA. 92+50.20 R2
STA. 105+24.37 R2 TO STA. 109+64.81 R2
STA. 129+88.91 R2 TO STA. 134+37.04 R2
STA. 135+40.00 R2 TO STA. 136+90.00 R2
STA . 117+00.00 R2 TO STA. 172+50.00 R2
STA. 189+50.00 R2 TO STA. 191+50.71 R2

PRELIMINARY
SUBJECT TO REVISION
This document is released for the purpose of interim review only under the authority of:
MICHAEL C. RIOJAS
P.E. 69690 on 6/12/2012
It is not to be used for bidding, construction, or permit purposes.

S&B INFRASTRUCTURE LTD.
Engineering • Management • Technology
TX PE FIRM # 1582
5805 CALLAGHAN RD.
SUITE 202
SAN ANTONIO, TX 78228
PHONE: 210.706.5800
FAX: 210.706.9233
WWW.SBINFRA.COM

CITY OF SAN ANTONIO
CAPITAL IMPROVEMENTS MANAGEMENT SERVICES DEPARTMENT

HARRY WURZBACH
TAPS MEMORIAL BLVD
PROPOSED TYPICAL SECTIONS

SHEET 1 OF 1

95% SUBMITTAL	PROJECT NO.: U1679		DATE:6/12/2012
DRWN. BY:BRP	DSGN. BY:EAC	CHKD. BY:MCR	

6/12/2012 11:45:53 AM
N:\project\u1810\Area300\DESIGN\Dgn\1810SRTS01.dgn

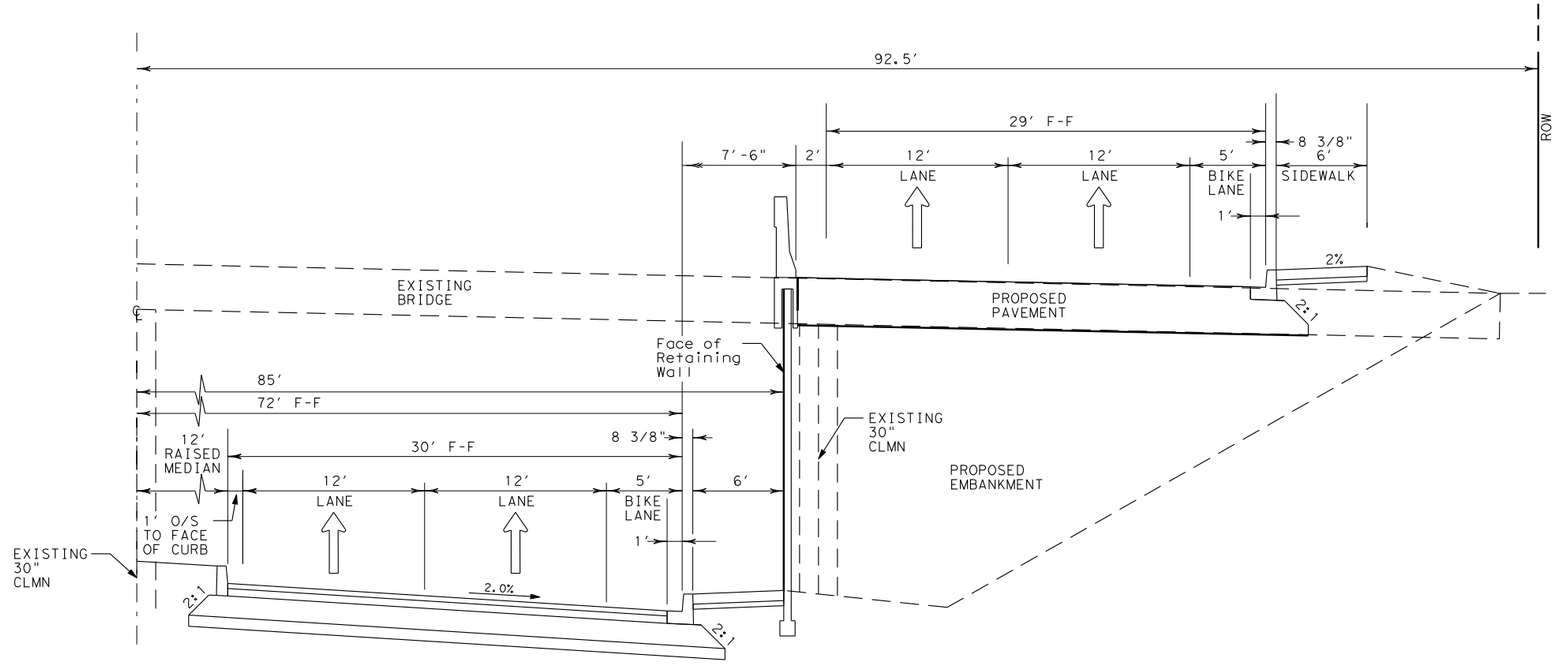

FROM STA. 105+24.37 R2 TO STA. 134+37.04 R2

TYPICAL SECTION
LEFT SIDE

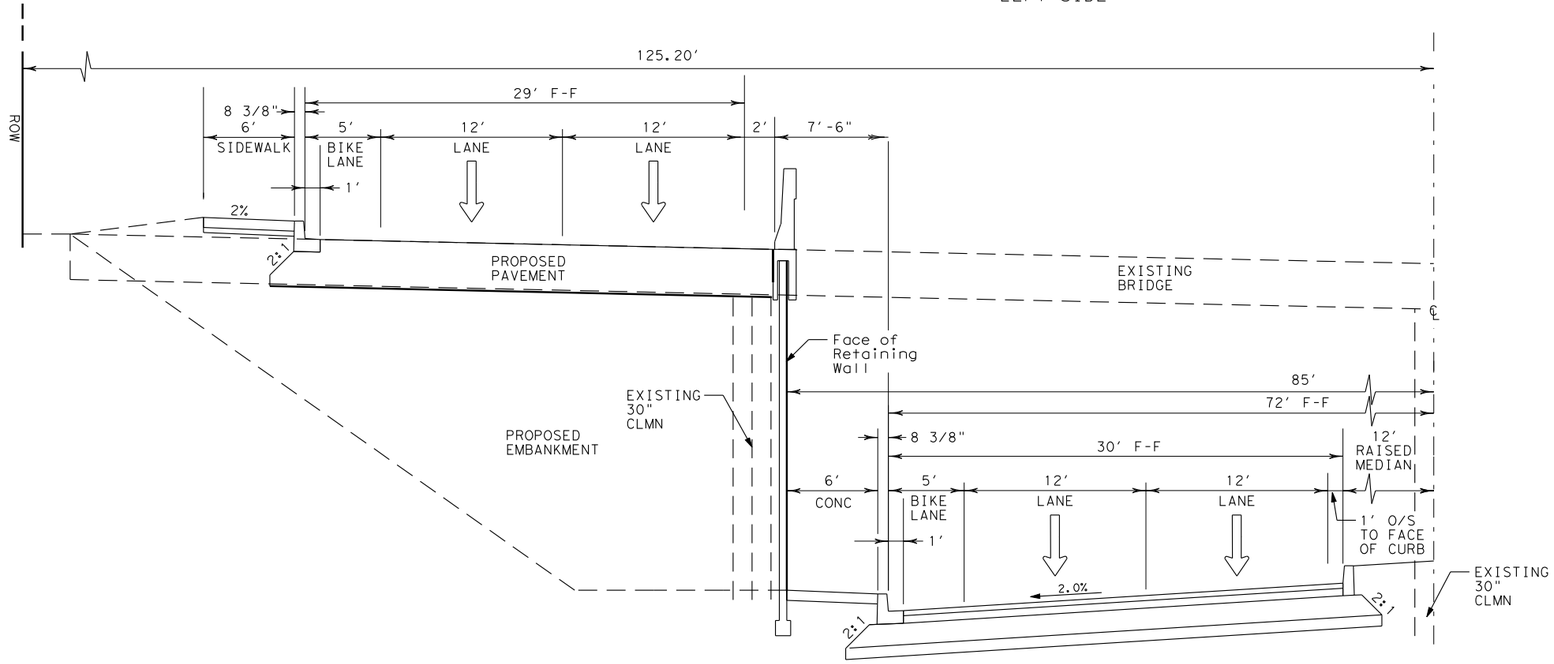

FROM STA. 105+24.37 R2 TO STA. 134+37.04 R2

TYPICAL SECTION
RIGHT SIDE

PRELIMINARY
SUBJECT TO REVISION
This document is released for the purpose of interim review only under the authority of:
MICHAEL C. RIOJAS
P.E. 69690 on 6/5/2012
It is not to be used for bidding, construction, or permit purposes.

REV. NO.	DATE	DESCRIPTION	BY

S&B INFRASTRUCTURE, LTD.
Engineering • Management • Technology TX PE FIRM # 1582
5805 CALLAGHAN RD. SUITE 202 SAN ANTONIO, TX 78228
PHONE: 210.706.5800 FAX: 210.706.9233 WWW.SBINFRA.COM

CITY OF SAN ANTONIO
CAPITAL IMPROVEMENTS MANAGEMENT SERVICES DEPARTMENT

HARRY WURZBACH
TAPS MEMORIAL BLVD
PROPOSED TYPICAL SECTIONS

SHEET 1 OF 1

95% SUBMITTAL	PROJECT NO.: U1679	DATE:6/5/2012
DRWN. BY:BRP	DSGN. BY:EAC CHKD. BY:MCR	

6/5/2012 3:42:13 PM
N:\project\u1810\Area300\DESIGN\Dgn\1810SRTS01.dgn

APPENDIX C

Existing Site Photos

IH410 - Harry Wurzbach Exit

IH410 Frontage Road at Harry Wurzbach

Harry Wurzbach at North End of Project

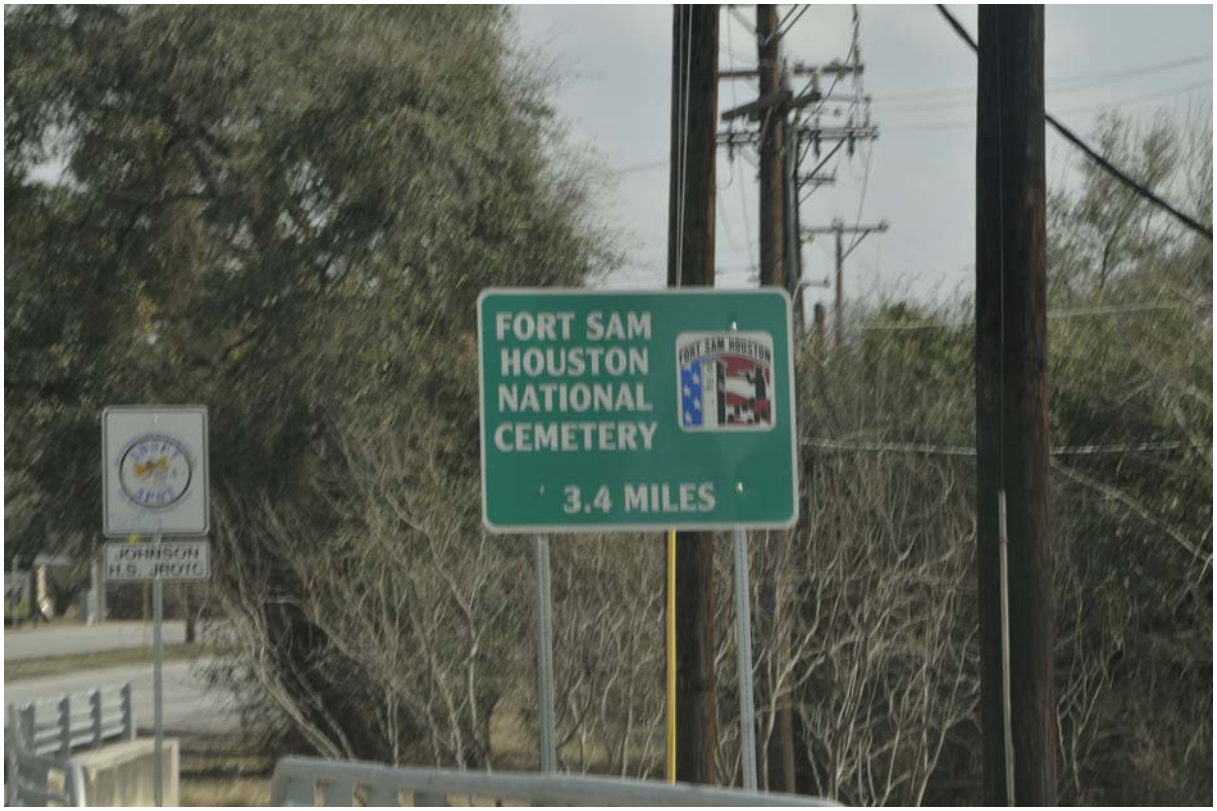

Harry Wurzbach National Cemetery Signage

Harry Wurzbach TAPS signage

Harry Wurzbach - No Sidwalks

Harry Wurzbach at Eisenhauer Rd

Harry Wurzbach at Austin Highway Underpass

Harry Wurzbach Side Ditch Drainage Structure

Harry Wurzbach Pedestrians No Sidewalks

Harry Wurzbach Non-ADA Compliant Sidewalk

Harry Wurzbach Pedestrian Path No Sidewalks

Harry Wurzbach Approaching Rittiman Rd

Harry Wurzbach Pedestrians BAMC Students

Harry Wurzbach at Cole High School Entrance

Harry Wurzbach Side Ditch Drainage in Terrell Hills

Harry Wurzbach Fort Sam Houston National Cemetery Entrance

Harry Wurzbach Fort Sam Houston National Cemetery Entrance

Harry Wurzbach Approaching Burr Rd

Harry Wurzbach Approaching Burr Rd.

Harry Wurzbach Fort Sam Houston Golf Club Entrance

Harry Wurzbach Fort Sam Houston Gate

Harry Wurzbach Vehicular Accident

APPENDIX D

Drainage Report

Storm Water Management Plan
(Preliminary Engineering Report)

Harry Wurzbach Road, Taps Memorial Parkway

August 23, 2012

DRAFT

Ernest Maestas, P.E.

S&B INFRASTRUCTURE

MAESTAS & ASSOCIATES, INC.

11550 IH 10 West, Suite 320
San Antonio, Texas
(210)366-1988 (210)366-1990(Fax)
TBPE Firm No. F-333

TABLE OF CONTENTS

Item	Page
Storm Water Management Plan	1
General	1
Design Criteria	2
Hydrology	2
Hydraulics	2
Adverse Impact Analysis	9

Appendix A – Overall Drainage Area Map

Appendix B – Interior Drainage Area MapsAppendix C – Existing Flows

Appendix D – Proposed Flows

Rational Method

DFIRM

TR-55

Appendix E – Hydraulic Conveyance

Appendix F – Cross Drainage Calculations

I. Storm Water Management Plan

A. General

Introduction

Existing Conditions:

The City of San Antonio Capital Improvements Management Services (CIMS) has proposed improvements to Harry Wurzbach /TAPS Memorial Blvd. from Fort Sam Houston Gate to IH 410. This project is approximately 3.8 miles long and is generally oriented from south to north. The terrain along the project is rolling with slopes that vary from 1% to 5%, but generally average in the 3% range.

The land use along this project is composed of commercial, residential, recreational, cemeteries and schools uses. Significant land uses include:

- Schools - John Garner Middle School and St. Pius X Catholic School
- Cemeteries- Sunset Memorial Park and Fort Sam Houston National Cemetery
- Recreational – Northwood Park, Fort Sam Houston Golf Course and Belmeade Park

City limits and Federal boundaries along the project limits include:

- City of San Antonio - Contained within City of San Antonio on both sides of project limits from Loop 410 south to Rittiman Road and west side of project limits from Burr Road south to Fort Sam Houston Gate.
- Fort Sam Houston – East side of project from Rittiman Road south
- Terrell Hills – West side of project from Rittiman Road to Burr Road

This project is located in the Salado Creek Watershed, west of the Salado Creek. Stormwater runoff for this project is based on nine (9) overall drainage areas that vary in size from 25 acres to 608 acres. These drainage areas flow to a series of culverts, listed in Table 1, then to the Salado Creek through a series of drainage channels, under storm sewers, or defined lows. The location of the project overall drainage areas are presented in Appendix A.

The Fort Sam Houston Tributary and the Tuttle Road Ditch a tributary to the Fort Sam Houston Tributary are included in the current DFIRM mapping. DFRIM mapping indicates that the 1% storm event flow for both of these tributaries over tops Harry Wurzbach/Taps Memorial Blvd.

This project is not located within a mandatory detention area. The existing roadway is mostly uncurbed with no sidewalks. Existing drainage is handled by as series of earthen bar ditches or concrete channels adjacent to the existing roadway.

Design Criteria

This project will be designed to comply with the UDC Storm Drainage Design Criteria as outlined below.

Inlets	25 YR
Culverts , Drainage Area <100 Ac	25 YR
Culverts, Drainage Area >100 Ac	100 YR
Trunklines	25 YR
Ponding Width	19 FT
Rainfall intensities	Bexar County
Minimum time of concentration	5 min.

Hydrology

Existing

The discharge calculations for drainage areas less than 200 acres will be calculated using Rational Method. For areas greater than 200 acres the NRCS TR 55 method will be used. For DFRIM study areas, DFRIM runoff rates, peak flows and water surface profiles for both of these tributaries, available on the San Antonio River Authority GIS web site, will be used for drainage calculations.

Proposed

All the project interior drainage areas are less than 100 acres and all systems runoff rates were calculated using the rational method. The location of the project interior drainage areas are presented in Appendix B.

Hydraulics

Existing Cross Drainage Facilities

A list of the existing cross drainage culverts by project stationing is presented in Table 1.

TABLE 1
Existing Drainage Culverts

Culvert	Station	Size	Location/Land mark
1	25+27.29	5' x 5' SBC	Fort Sam Houston Low
2	47+59.33	5' x 5' SBC	Fort Sam Houston Low
3	32+39.45	10' x 6' SBC	Tuttle Road Ditch
4	40+92.93	4 - 6' x 5' MBC	Fort Sam Houston Tributary
5	95+79.30	3' x 2' SBC	Apartment Complex
6	106+00.00	8' x 7' SBC	Drainage Ditch
7	114+77.81	24" RCP	Austin Hwy
8	124+09.52	4' x 3' SBC	Eisenhauer Road
9	152+74.78	2-6' x 5' MBC	Drainage Ditch
10	168+39.45	7' x 6' SBC	Drainage Ditch

Initial Storm Drainage System Layout

Seventeen storm sewer systems are proposed for this project with one or two that coincide with the cross drainage culverts. The location and number of proposed inlets have been placed according to the design criteria and are shown on the Schematic layout. The exact number will be determined in later stages of design. The location of inlets will be determined by the ponding width and the available location along the street that minimizes disturbance to utilities and conflicts with driveways.

The discharge calculations and storm sewer sizing calculations are shown in Appendix C.

Proposed Cross Drainage Facilities

A list of the proposed cross drainage culverts by project stationing is presented in Table 2.

TABLE 2

Proposed Drainage Culverts

Culvert	Station	Proposed Culvert Size	Design Storm	Remarks
1	25+32.70	10' x 5' SBC	4%	
2	47+55.88	9' x 5' SBC	4%	
3	32+42.00	3-10' x 5' MBC	1%	Tuttle Road Ditch, within designated FEMA Flood plain
4	40+75.00	8-10' x 7' MBC	1%	Fort Sam Houston Tributary, within designated FEMA flood plain
	95+79.30			Culvert discharges to apartment complex, culvert will be eliminated and flow diverted to Culvert 5.
5	106+14.82	3-8' x 5' MBC	1%	
	116+04	4' x 4' SBC	4%	Austin Hwy sag outfalls northeast on along north side of Austin Hwy to Eisenhauer Road, then east on Eisenhauer to the Salado Creek
	126+27.44	7' x 4' SBC	1%	Eisenhauer Road overpass. New culvert will be routed north along west side of Harry Wurzbach/Taps Memorial Blvd to Station 123+03, cross east under Harry Wurzbach/Taps Memorial Blvd, then south along eastside of Harry Wurzbach/Taps Memorial Blvd and discharge at location of original culvert.
6	152+73.00	5-10' x 5' MBC	1%	
7	168+38.73	10' x 6' SBC	4%	

Many of the existing culverts were installed on steep grades. The downstream sides of these culverts have significant scour holes. In addition upgrading this culverts to provide additional flow capacity, the culverts grades were flattened to reduce potential for scour on the downstream end. All culverts will be provided with baffle block or other types of channel stabilization to minimize scour downstream of the culverts. It should be noted that all of the proposed culverts will require regrading of the downstream channels. This channel grading will require coordination with Fort Sam Houston and other property owners.

Proposed Drainage Systems

System A: Station 19+07 to 25+25 - South of Belmeade Park to Culvert 1

Inlets: Inlets on Harry Wurzbach/Taps Memorial Blvd. will be curb inlets on grade.

Trunkline: Size is 24“ RCP.

Outfall: Outfall is proposed Culvert 1 (10’x 5’ SBC)

Area size: Drainage Area for System A is less than 100 acres and the proposed storm sewer facilities will be sized for the 25 year event.

System B: Station 25+25 to 35+39 - From Culvert 1 to north side of W Brandon Drive

Inlets: Inlets on Harry Wurzbach/Taps Memorial Blvd. will be curb inlets on grade with a pair of sag inlets at Station 29+74.59. Drop inlets or grate inlets will be provided at the end of W. Brandon Dr.

Trunkline: Size will vary from 24” RCP to 5’x 4' SBC.

Outfall: Outfall is proposed Culvert 1 (10’x 5’ SBC)

Area size: Drainage Areas for System B are less than 100 acres and the proposed storm sewer facilities will be sized for the 25 year event.

System C: Station 45+08 to 47+56 - From Medford Drive to the Culvert 2

Inlets: Inlets on Harry Wurzbach/Taps Memorial Blvd. will be curb inlets on grade. Drop inlets or grate inlets will be provided at the end of Medford Dr.

Trunkline: Size will vary from 24” RCP to 8' x 4' SBC.

Outfall: Outfall is proposed Culvert 2 (9’x 5’ SBC)

Area size: Drainage Areas for System C are less than 100 acres and the proposed storm sewer facilities will be sized for the 25 year event.

System D: Station 47+56 to 17+54 - From Culvert 2 to Raphail Drive

Inlets: Inlets on Harry Wurzbach/Taps Memorial Blvd. will be curb inlets on grade with a pair of sag inlets at Station 48+09.51. Curb inlets or grate inlets will be provided on side streets at Raphail Dr.

Trunkline: Size will vary from 24” RCP to 42” RCP.

Outfall: Outfall is proposed Culvert 2 (9’x 5’ SBC)

Area size: Drainage Areas for System D are less than 100 acres and the proposed storm sewer facilities will be sized for the 25 year event.

System E/F: Station 21+00 to 32+42 - From south of Burr Road to Tuttle Road Ditch (Culvert 3)

Inlets: Inlets on Harry Wurzbach/Taps Memorial Blvd. will be curb inlets on grade. Curb inlets or grate inlets will be provided on side streets at Burr Rd, Terrell Rd and Elizabeth Rd. Drainage areas for Burr Rd, Terrell Rd. and Elizabeth Rd are designated as Areas E10-E40.

Trunkline: Size will vary from 24" RCP to 48" RCP.

Outfall: Outfall is proposed Culvert 3 (3-10'x 5' MBC)

Area size: Drainage Areas for System E and F are less than 100 acres and the proposed storm sewer facilities will be sized for the 25 year event.

System G: Station 32+42 to 36+42 - From Tuttle Road Ditch (Culvert 3) to Just North of Tuttle Road

Inlets: Inlets on Harry Wurzbach/Taps Memorial Blvd. will be curb inlets on grade with a pair of sag inlets at Station 33+10. Curb inlets or grate inlets will be provided at the side street of Tuttle Rd.

Trunkline: Size will vary from 24" RCP to 48" RCP.

Outfall: Outfall is proposed Culvert 3 (3-10'x 5' MBC)

Area size: Drainage Areas for System G are less than 100 acres and the proposed storm sewer facilities will be sized for the 25 year event.

System H: Station 39+24 to 40+75 – From south of Garraty Road intersection to Fort Sam Houston Tributary (Culvert 4)

Inlets: Inlets on Harry Wurzbach/Taps Memorial Blvd. will be curb inlets on grade with a pair of sag inlets at Station 40+44.68. Curb inlets or grate inlets will be provided at the side street of Garraty Rd.

Trunkline: Size is a 24" RCP

Outfall: Outfall is proposed Culvert 4 (8-10'x 7' MBC)

Area size: Drainage Areas for System H area less than 100 acres and the proposed storm sewer facilities will be sized for the 25 year event.

System I: Station 40+75 to 52+03 - From Ft. Sam Houston Tributary (Culvert 4) to alley north of Seford Drive

Inlets: Inlets on Harry Wurzbach/Taps Memorial Blvd. will be curb inlets on grade. Curb inlets or grate inlets will be provided at the side streets of Arvin Dr., Seford Dr, Fort Sam Houston Blvd and Austin Loop Dr.

Trunkline: Size will vary from 24" RCP to 42" RCP.

Outfall: Outfall is proposed Culvert 4 (8-10'x 7' MBC)

Area size: Drainage Areas for System I are less than 100 acres and the proposed storm sewer facilities will be sized for the 25 year event.

System J/K: Station 93+60 to 106+00 - From Timberlane to Culvert 5, north of Sumner Drive

Inlets: Inlets on Harry Wurzbach/Taps Memorial Blvd. will be curb inlets on grade. JK inlets will be grate inlets provided at the side streets of Timberlane Dr., Karen Ln., Olney Dr., and Summer Dr.

Trunkline: Size will vary from 24” RCP to 8 x 4 Box culvert .

Outfall: Outfall is proposed Culvert 5 (3-8’x 7’ MBC)

Area size: Drainage Areas for System J and K are less than 100 acres and the proposed storm sewer facilities will be sized for the 25 year event.

System K: Station 106+00 to 114+77 – Subset of system J/K from Culvert 5 to Austin Hwy.

Inlets: Inlets for System K will be culvert headwall at commercial areas on south side of Austin Hwy. Existing 7’ x 6’ SBC draining detention basin at HEB will not be routed or modified.

Trunkline: Open channel and 30" RCP

Outfall: Outfall is proposed Culvert 5 (3-8’ x 7’ MBC)

Area size: Drainage Areas for System K are less than 100 acres and the proposed storm sewer facilities will be sized for the 25 year event.

System L1: Station 108+47 to 123+25 - From 245-feet north of Culvert 5 to Eisenhauer Road

Inlets: Inlets on Harry Wurzbach/Taps Memorial Blvd. will be curb inlets on grade with sag inlets at Station 115+65.

Trunkline: Size will vary from 24” RCP to 6’ x 4’ SBC along north side of Austin Hwy and east on Eisenhauer Road, then east on Eisenhauer Rd.

Outfall: Newly constructed 4x4 box culvert, will go east on Austin Highway to Eisenhauer Road and then east on Eisenhauer Road to Salado Creek. The work will included placing the box culvert, patching and overlaying the street. Utility work will be necessary but is not included in the cost estimates. It was assumed that this outfall would not receive any additional flows from Austin Hwy or Eisenhauer Road.

Area size: Drainage Areas for System L1 are less than 100 acres and the proposed storm sewer facilities will be sized for the 25 year event.

System L2: Station 123+25 to 127+03 - From Eisenhauer Road north approximately 378-feet, then east across Harry Wurzbach/Taps Memorial Blvd, then south existing drainage swale on north side of Eisenhauer Road

Inlets: Inlets on Harry Wurzbach/Taps Memorial Blvd. will be curb inlets on grade.

Trunkline: Size will vary from 24"{ RCP to 7’ x 4’ SBC

Outfall: Concrete open channel on north side of Eisenhauer Road.

Area size: Drainage Areas for System L2 are less than 100 acres and the proposed storm sewer facilities will be sized for the 25 year event.

System M/N: Station 135+00 to 152+73 - FromThrush Garden to Culvert 6, south of Oakwell Ct.

Inlets: Inlets on Harry Wurzbach/Taps Memorial Blvd. will be curb inlets System M inlets will be grate inlets or drop inlets.

Trunkline: Size will vary from 24” RCP to 48” RCP along with open channel north of Dove Haven Dr.

Outfall: Outfall is proposed Culvert 6 (5-10’ x 5’ MBC)

Area size: Drainage Areas for System M and N are less than 100 acres and the proposed storm sewer facilities will be sized for the 25 year event.

System Q*: Station 152+73 to 159+20 - From Culvert 5 to north side of Oakswell Ct

Inlets: Inlets on Harry Wurzbach/Taps Memorial Blvd. will be curb inlets, drop inlets or grate inlets.

Trunkline: Size will vary from 24” RCP to 10' x 4' SBC

Outfall: Outfall is proposed Culvert 6 (5-10’ x 5’ MBC)

Area size: Drainage Areas for System Q* are less than 100 acres and the proposed storm sewer facilities will be sized for the 25 year event.

System Q: Station 162+90 to 168+39-From St. Pius X High School to Culvert 7, north of 5 Oaks Drive

Inlets: Inlets on Harry Wurzbach/Taps Memorial Blvd. will be curb inlets, drop inlets or grate inlets.

Trunkline: Size will vary from 24” RCP to 36” RCP

Outfall: Outfall is proposed Culvert 6 (5-10’ x 5’ MBC)

Area size: Drainage Areas for System Q are less than 100 acres and the proposed storm sewer facilities will be sized for the 25 year event.

System R: Station 168+39 to 188+89 - From Culvert 7, north of 5 Oak Drive to Cripple Creek Street

Inlets: Inlets on Harry Wurzbach/Taps Memorial Blvd. will be curb inlets or grate inlets.

Trunkline: Size will vary from 24” RCP to 36” RCP

Outfall: Outfall is proposed Culvert 7 (10’ x 7’ SBC)

Area size: Drainage Areas for System R are less than 100 acres and the proposed storm sewer facilities will be sized for the 25 year event.

System S: Station 166+32 to 181+37- From south side of 5 Oak Drive to Gardner Middle School

Inlets: Inlets on System S will be grate inlets or drop inlets.

Trunkline: Open channel

Outfall: Outfall is proposed Culvert 7 (10’ x 7’ SBC)

Area size: Drainage Areas for System S are less than 100 acres and the proposed storm sewer facilities will be sized for the 25 year event.

QAQC checklist items:

Initial Storm Drainage System Alternative

The proposed systems solutions are a storm sewer of the size shown on the schematic. Location will be adjusted as utility locations are verified in the field. Sizes of inlets, laterals and trunk lines will be adjusted in later stages of design.

Alternative system solutions

Alternative system solution were considered for the following locations:

1. System L1 (Austin Hwy) The existing and proposed road profiles at this location are approximately 20-feet below the adjacent properties and approximately 6-feet below the invert of Culvert 5 to the south. Upgrading or rerouting the existing storm sewer system on Austin Hwy will require cut in excess of 20-feet and will require construction within a heavily traveled roadway (Austin Hwy) and coordination with TxDOT. Consideration was given to using a pump station to drain this area and routing the force main north to Eisenhauer Road. At Eisenhauer Road a new outfall would be constructed within the ROW of Eisenhauer Road east to the Salado Creek. This alternative was ruled out because it did not eliminate the need for construction of a lengthy outfall to the Salaldo Creek.
2. At Station 96+75 an existing 3' x 2' SBC drains across Harry Wurzbach/Taps Memorial Blvd. This culvert current discharges directly to an existing apartment complex. A concrete wall and flume has been constructed on the downstream side of this culvert to redirect flow away for an existing apartment building unit and on to their driveway. We propose to eliminate this culvert and redirect the flow to Culvert 5.

No alternative system solutions were studied. The existing outfalls and project limits work well with the proposed systems shown. Adjustments will be made to the proposed alignments during design phases to accommodate utility, driveway, construction phasing and other issues

Hydraulic Calculations for initial Storm Drainage Layout

These calculations shown in the Appendix B were used to get the approximate sizes of the proposed systems. More detailed calculations will be performed in the later stages of design.

Floodplain analysis

The Fort Sam Houston Tributary and the Tuttle Road Ditch are included in the current DFRIM mapping and modeling on the SARA GIS website. Further analysis was not required for this project.

Erosion and Stabilization

All downstream outlets of the cross drainage culverts on this project will be stabilized using erosion matting, concrete riprap, rock riprap and baffle blocks.

Best Management Practices

The project area is significantly developed and the outfalls have been improved. There are no apparent locations where BMP's would be needed maintain current water quality. Permanent BMP's could be added within the project if desired.

Outlet and Outfall Stabilization Plan

All downstream outlets of the cross drainage culverts on this project will be stabilized using erosion matting, concrete riprap, rock riprap and baffle blocks.

Statement:

The watershed drained by the proposed storm sewer system is fully developed; therefore there will be no significant increase in runoff from this project. This project will improve the drainage along Harry Wurzbach Road by way of the addition of an underground storm sewer system. All cross drainage structures were analyzed and demonstrate no increase to water surface elevations upstream or downstream.

Regional Storm Water Management program Participation Form:

This form does not apply to a CIMS projects.

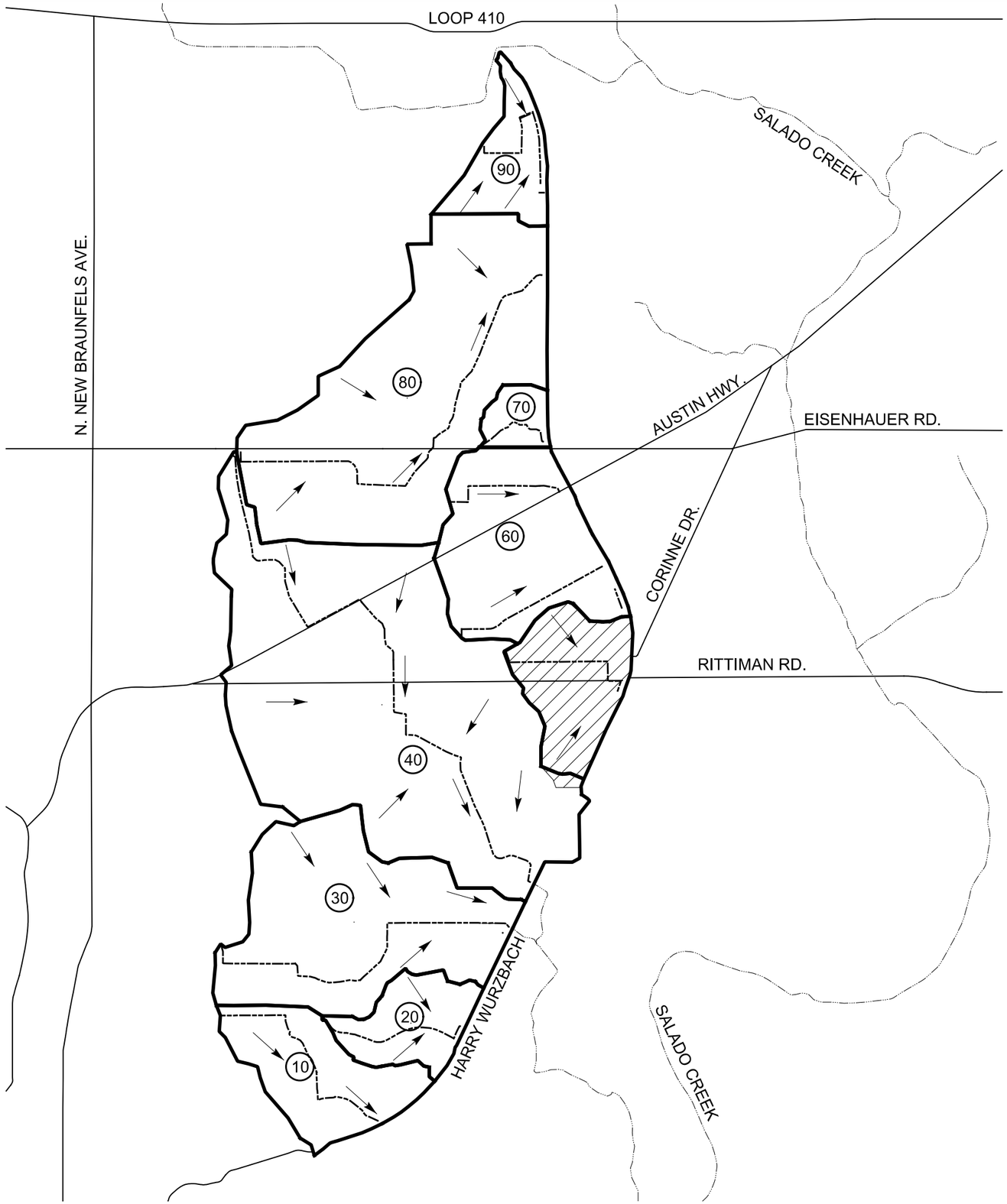

SCALE: 1" = 2000'

PLAN VIEW LEGEND

(40)	DRAINAGE AREAS
	DRAINAGE AREA BOUNDARIES
	FLOW PATH
	FLOW ARROWS
	THIS AREA NOT PART OF CONTRACT. SEE TxDOT PROJECT: RITTIMAN RD. & HARRY WURZBACH INTERSECTION PROJECT NO. 40-00015, CSJ 915-12-480 & 915-12-470

THIS DOCUMENT IS RELEASED FOR THE PURPOSE OF PRELIMINARY REVIEW UNDER THE AUTHORITY OF ERNEST T. MAESTAS, P.E. 52938 ON 8/10/2012 . IT IS NOT TO BE USED FOR CONSTRUCTION OR BIDDING PURPOSES.

MAESTAS & ASSOCIATES INC.
TBPE REGISTRATION No. : F-333
11550 I.H. 10 WEST
SUITE 320
SAN ANTONIO, TEXAS 78230
(210) 366-1988

CITY OF SAN ANTONIO
CAPITAL IMPROVEMENTS MANAGEMENT SERVICES DEPARTMENT

HARRY WURZBACH TAPS MEMORIAL BLVD.

APPENDIX A
OVERALL DRAINAGE AREA MAP

SHEET 1 OF 1

PER % SUBMITTAL	PROJECT NO.:	DATE: AUGUST 2, 2012
DRWN. BY: CG & KG	DSGN. BY: MJM & JPS / CHKD. BY: ETM	SHEET NO.: OF

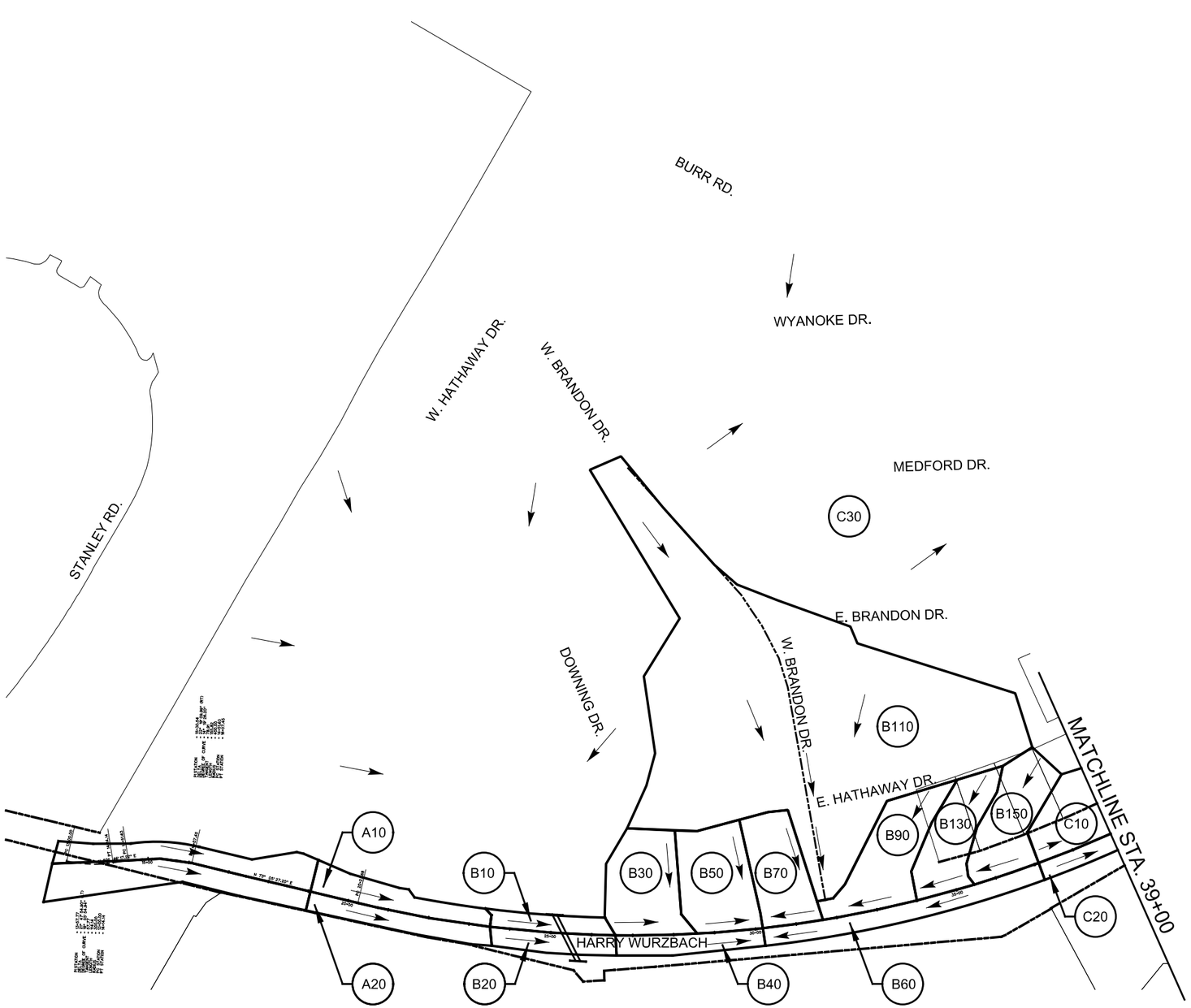

SCALE: 1" = 300'

PLAN VIEW LEGEND

A50	DRAINAGE AREAS
	DRAINAGE AREA BOUNDARIES
	APPARENT RIGHT OF WAY
	FLOW PATH
	FLOW ARROWS

THIS DOCUMENT IS RELEASED FOR THE PURPOSE OF PRELIMINARY REVIEW UNDER THE AUTHORITY OF ERNEST T. MAESTAS, P.E. 52938 ON 8/23/2012 . IT IS NOT TO BE USED FOR CONSTRUCTION OR BIDDING PURPOSES.

MAESTAS & ASSOCIATES INC.
TBPE REGISTRATION No. : F-333
11550 I.H. 10 WEST
SUITE 320
SAN ANTONIO, TEXAS 78230
(210) 366-1988

CITY OF SAN ANTONIO
CAPITAL IMPROVEMENTS MANAGEMENT SERVICES DEPARTMENT

HARRY WURZBACH TAPS MEMORIAL BLVD.

APPENDIX B
INTERIOR AREA DRAINAGE MAP

SHEET 1 OF 8

PER % SUBMITTAL	PROJECT NO.:_____		DATE: 8/23/2012
DRWN. BY: CG & KG	DSGN. BY: MJM & JPS	CHKD. BY: ETM	SHEET NO.: __OF__

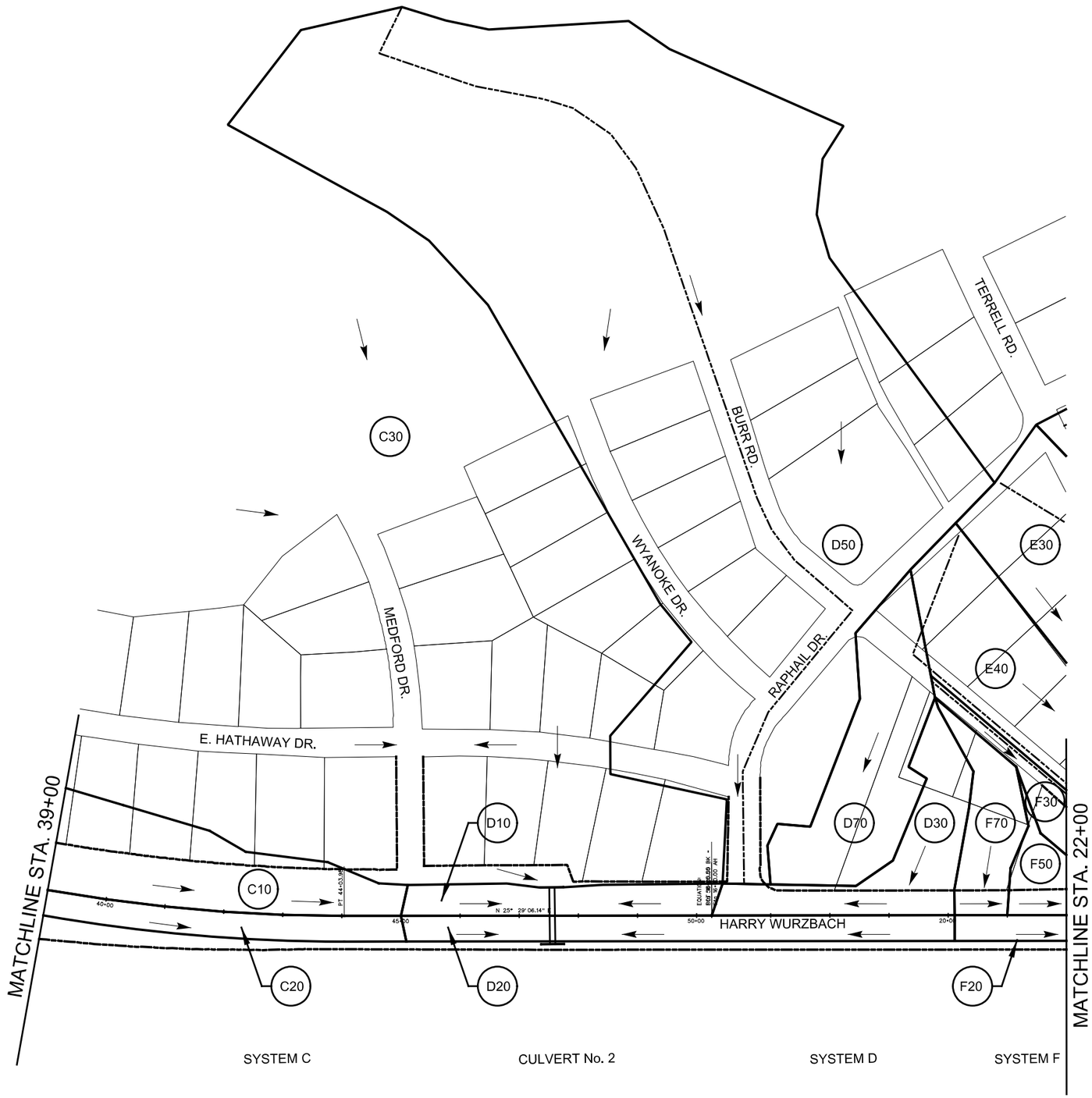

SCALE: 1" = 200'

PLAN VIEW LEGEND

A50	DRAINAGE AREAS
———	DRAINAGE AREA BOUNDARIES
— — —	APPARENT RIGHT OF WAY
- - - -	FLOW PATH
→	FLOW ARROWS

THIS DOCUMENT IS RELEASED FOR THE PURPOSE OF PRELIMINARY REVIEW UNDER THE AUTHORITY OF ERNEST T. MAESTAS, P.E. 52938 ON 8/23/2012 . IT IS NOT TO BE USED FOR CONSTRUCTION OR BIDDING PURPOSES.

MAESTAS & ASSOCIATES INC.
TBPE REGISTRATION No. : F-333
11550 I.H. 10 WEST
SUITE 320
SAN ANTONIO, TEXAS 78230
(210) 366-1988

CITY OF SAN ANTONIO
CAPITAL IMPROVEMENTS MANAGEMENT SERVICES DEPARTMENT

HARRY WURZBACH TAPS MEMORIAL BLVD.

APPENDIX B
INTERIOR DRAINAGE AREA MAP

SHEET 2 OF 8

PER % SUBMITTAL	PROJECT NO.:_____	DATE: 8/23/2012
DRWN. BY: CG & KG	DSGN. BY: MJM & JPS CHKD. BY: ETM	SHEET NO.: __OF__

SCALE: 1" = 200'

PLAN VIEW LEGEND

A50	DRAINAGE AREAS
———	DRAINAGE AREA BOUNDARIES
— — —	APPARENT RIGHT OF WAY
- - - - -	FLOW PATH
→	FLOW ARROWS

* E30 SPLIT INTO E30, E31 AT HARRY WURZBACH. THE FLOW IS EQUALLY SPLIT.

* E10 SPLIT INTO E10, E11 AT HARRY WURZBACH THE FLOW IS EQUALLY SPLIT.

* G30 SPLIT INTO G29, G30 AT HARRY WURZBACH THE FLOW IS EQUALLY SPLIT.

THIS DOCUMENT IS RELEASED FOR THE PURPOSE OF PRELIMINARY REVIEW UNDER THE AUTHORITY OF ERNEST T. MAESTAS, P.E. 52938 ON 8/23/2012 . IT IS NOT TO BE USED FOR CONSTRUCTION OR BIDDING PURPOSES.

MAESTAS & ASSOCIATES INC.
TBPE REGISTRATION No. : F-333
11550 I.H. 10 WEST
SUITE 320
SAN ANTONIO, TEXAS 78230
(210) 366-1988

CITY OF SAN ANTONIO
CAPITAL IMPROVEMENTS MANAGEMENT SERVICES DEPARTMENT

HARRY WURZBACH TAPS MEMORIAL BLVD.

APPENDIX B
INTERIOR AREA DRAINAGE MAP

SHEET 3 OF 8

PER % SUBMITTAL	PROJECT NO.:_____		DATE: 8/23/2012
DRWN. BY: CG & KG	DSGN. BY: MJM & JPS	CHKD. BY:_____ETM	SHEET NO.:__OF__

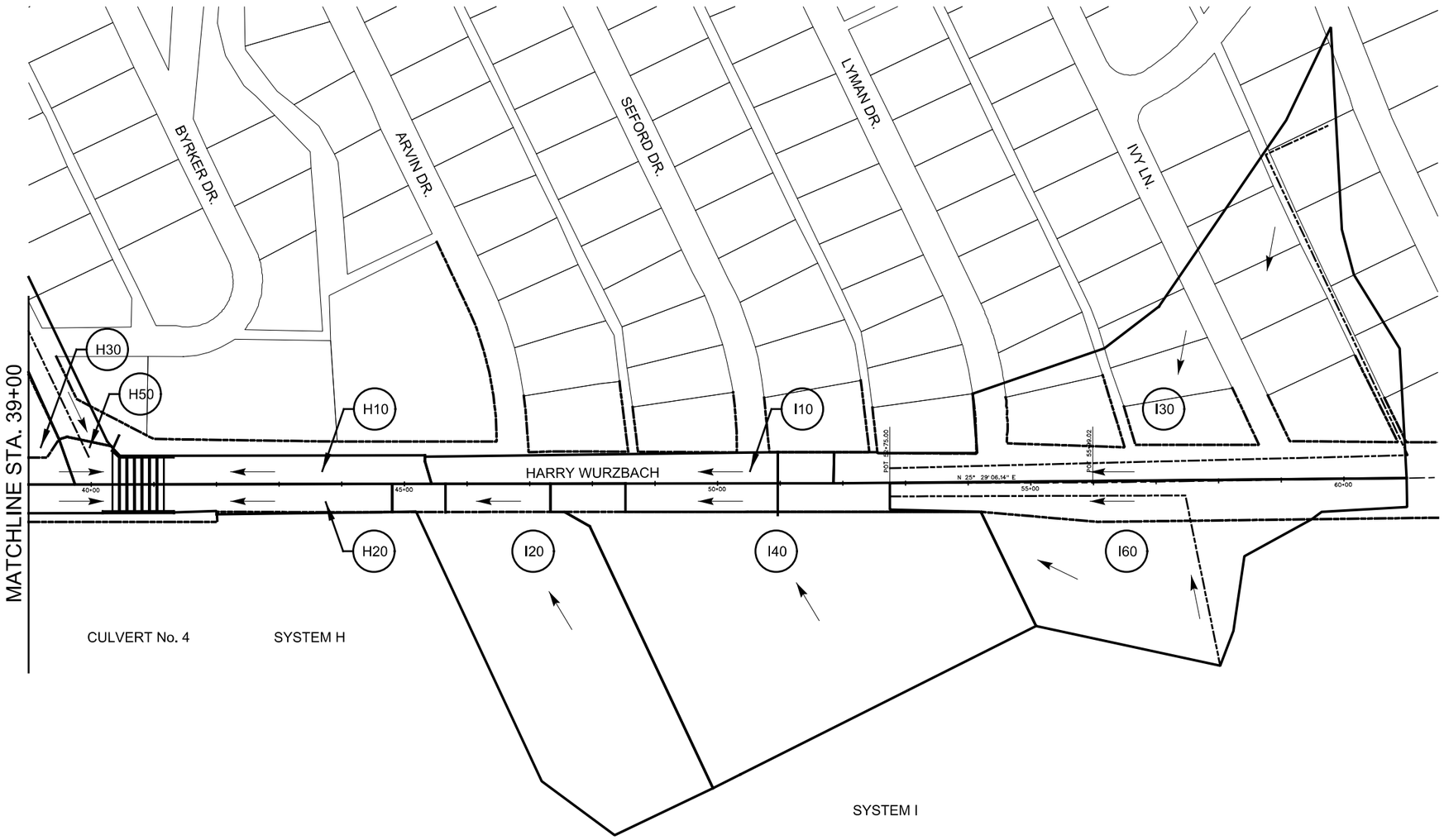

SCALE: 1" = 200'

PLAN VIEW LEGEND

A50	DRAINAGE AREAS
	DRAINAGE AREA BOUNDARIES
	APPARENT RIGHT OF WAY
	FLOW PATH
	FLOW ARROWS

THIS DOCUMENT IS RELEASED FOR THE PURPOSE OF PRELIMINARY REVIEW UNDER THE AUTHORITY OF ERNEST T. MAESTAS, P.E. 52938 ON 8/23/2012 . IT IS NOT TO BE USED FOR CONSTRUCTION OR BIDDING PURPOSES.

MAESTAS & ASSOCIATES INC.
TBPE REGISTRATION No. : F-333
11550 I.H. 10 WEST
SUITE 320
SAN ANTONIO, TEXAS 78230
(210) 366-1988

CITY OF SAN ANTONIO
CAPITAL IMPROVEMENTS MANAGEMENT SERVICES DEPARTMENT

HARRY WURZBACH TAPS MEMORIAL BLVD.

APPENDIX B
INTERIOR AREA DRAINAGE MAP

SHEET 4 OF 8

PER % SUBMITTAL	PROJECT NO.:_____		DATE: 8/23/2012
DRWN. BY: CG & KG	DSGN. BY: MJM & JPS	CHKD. BY:_____ETM	SHEET NO.:__OF__

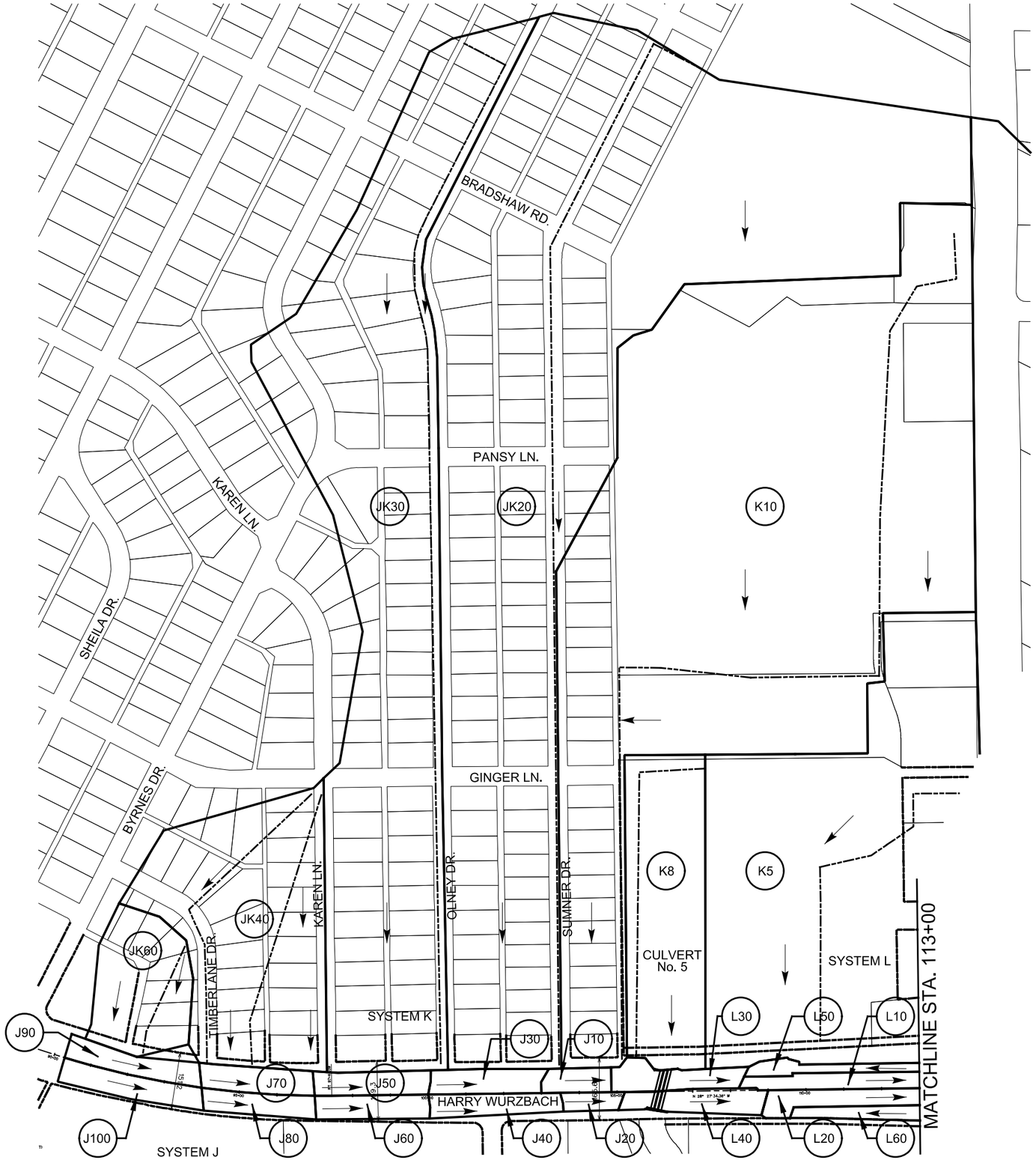

SCALE: 1" = 300'

PLAN VIEW LEGEND

A50	DRAINAGE AREAS
———	DRAINAGE AREA BOUNDARIES
— — —	APPARENT RIGHT OF WAY
- - - -	FLOW PATH
→	FLOW ARROWS

THIS DOCUMENT IS RELEASED FOR THE PURPOSE OF PRELIMINARY REVIEW UNDER THE AUTHORITY OF ERNEST T. MAESTAS, P.E. 52938 ON 8/23/2012 . IT IS NOT TO BE USED FOR CONSTRUCTION OR BIDDING PURPOSES.

MAESTAS & ASSOCIATES INC.
TBPE REGISTRATION No. : F-333
11550 I.H. 10 WEST
SUITE 320
SAN ANTONIO, TEXAS 78230
(210) 366-1988

CITY OF SAN ANTONIO
CAPITAL IMPROVEMENTS MANAGEMENT SERVICES DEPARTMENT

HARRY WURZBACH TAPS MEMORIAL BLVD.

APPENDIX B
INTERIOR AREA DRAINAGE MAP

SHEET 5 OF 8

PER % SUBMITTAL	PROJECT NO.:		DATE: 8/23/2012
DRWN. BY: CG & KG	DSGN. BY: MJM & JPS	CHKD. BY: ETM	SHEET NO.: OF

SCALE: 1" = 300'

PLAN VIEW LEGEND

A50	DRAINAGE AREAS
	DRAINAGE AREA BOUNDARIES
	APPARENT RIGHT OF WAY
	FLOW PATH
	FLOW ARROWS

THIS DOCUMENT IS RELEASED FOR THE PURPOSE OF PRELIMINARY REVIEW UNDER THE AUTHORITY OF ERNEST T. MAESTAS, P.E. 52938 ON 8/23/2012 . IT IS NOT TO BE USED FOR CONSTRUCTION OR BIDDING PURPOSES.

MAESTAS & ASSOCIATES INC.
TBPE REGISTRATION No. : F-333
11550 I.H. 10 WEST
SUITE 320
SAN ANTONIO, TEXAS 78230
(210) 366-1988

CITY OF SAN ANTONIO
CAPITAL IMPROVEMENTS MANAGEMENT SERVICES DEPARTMENT

HARRY WURZBACH TAPS MEMORIAL BLVD.

APPENDIX B
INTERIOR AREA DRAINAGE MAP

SHEET 6 OF 8

PER % SUBMITTAL	PROJECT NO.:_____		DATE: 8/23/2012
DRWN. BY: CG & KG	DSGN. BY: MJM & JPS	CHKD. BY: ETM	SHEET NO.:__OF__

SCALE: 1" = 300'

PLAN VIEW LEGEND

A50	DRAINAGE AREAS
———	DRAINAGE AREA BOUNDARIES
— — —	APPARENT RIGHT OF WAY
—·—·—	FLOW PATH
→	FLOW ARROWS

THIS DOCUMENT IS RELEASED FOR THE PURPOSE OF PRELIMINARY REVIEW UNDER THE AUTHORITY OF ERNEST T. MAESTAS, P.E. 52938 ON 8/23/2012 . IT IS NOT TO BE USED FOR CONSTRUCTION OR BIDDING PURPOSES.

MAESTAS & ASSOCIATES INC.
TBPE REGISTRATION No. : F-333
11550 I.H. 10 WEST
SUITE 320
SAN ANTONIO, TEXAS 78230
(210) 366-1988

CITY OF SAN ANTONIO
CAPITAL IMPROVEMENTS MANAGEMENT SERVICES DEPARTMENT

HARRY WURZBACH TAPS MEMORIAL BLVD.

APPENDIX B
INTERIOR AREA DRAINAGE MAP

SHEET 7 OF 8

PER % SUBMITTAL	PROJECT NO.:_____		DATE: 8/23/2012
DRWN. BY: CG & KG	DSGN. BY: MJM & JPS	CHKD. BY: ETM	SHEET NO.:__OF__

SCALE: 1" = 200'

PLAN VIEW LEGEND

A50	DRAINAGE AREAS
	DRAINAGE AREA BOUNDARIES
	APPARENT RIGHT OF WAY
	FLOW PATH
	FLOW ARROWS

DALEWOOD PL.

WYNDALE ST.

ROBIN REST DR.

CAVE LN.

LARAMIE DR.

OAK GLEN DR.

HARRY WURZBACH

CRIPPLE CREEK ST.

MATCHLINE STA. 168+00

OAKWELL FARMS PKWY.

SYSTEM S

SYSTEM R

CULVERT No. 7

P10 S20 S40 S60 R110 R90 R65 R80 S50 R70 R50 R55 R45 R60 S10 S30 R30 R10 R35 R40 R25 R20 R15

THIS DOCUMENT IS RELEASED FOR THE PURPOSE OF PRELIMINARY REVIEW UNDER THE AUTHORITY OF ERNEST T. MAESTAS, P.E. 52938 ON 8/23/2012 . IT IS NOT TO BE USED FOR CONSTRUCTION OR BIDDING PURPOSES.

MAESTAS & ASSOCIATES INC.
TBPE REGISTRATION No. : F-333
11550 I.H. 10 WEST
SUITE 320
SAN ANTONIO, TEXAS 78230
(210) 366-1988

CITY OF SAN ANTONIO

CAPITAL IMPROVEMENTS MANAGEMENT SERVICES DEPARTMENT

HARRY WURZBACH TAPS MEMORIAL BLVD.

APPENDIX B
INTERIOR AREA DRAINAGE MAP

SHEET 8 OF 8

PER % SUBMITTAL	PROJECT NO.:		DATE: 8/23/2012
DRWN. BY: CG & KG	DSGN. BY: MJM & JPS	CHKD. BY: ETM	SHEET NO.: OF

EXISTING DRAINAGE AREA FLOW CALCULATIONS

Area ID	Total Area	C_W	CA	Overland Flow			Time of concentration calculation												Time	Tc		I_{25}	Q_{25}	I_{100}	Q_{100}
							Reach 1		Reach 2		Reach 3		Reach 4		Reach 5		Reach 6								
	Acres			L	slope	T	Length	Vel	Length	Vel	Length	Vel	Length	Vel	Length	Vel	Length	Vel	minutes	minutes	hours	in/hr	cfs	in/hr	cfs
10	112	0.79	89	195	1.4%	18	1215	3	1575	6	270	10	2500	6	60	10	270	6	20	38	0.63	4.35	387	5.44	483
20	67	0.73	49	84	<1%	15	2437	6	242	6									7	22	0.37	5.89	290	7.61	375
30	273	0.65	179	300	0.7%	24	1255	4	1324	6	1324	6	3286	10					18	42	0.70				1495(1)
40	608	0.75	454	65	<2%	11	4590	5	617	10	593	6	5339	10					27	38	0.63				4200(1)
60	178	0.91	162	145	1.6%	16	2765	4											12	28	0.47	5.18	839	6.41	1037
70	25	0.82	21	300	7.0%	15	469	6	426	3	236	6							4	19	0.32	6.36	131	8.45	174
80	405	0.74	299	108	0.7%	16	650	5	622	4	250	6	1284	5					10	26	0.43		1709(2)		2568(2)
90	63	0.70	44	188	1.07%	19	809	5	1524	6									7	26	0.43	5.39	239	6.76	300

(1) FLOWS FROM DFIRM MAPPING DATA FROM SAN ANTONIO RIVER AUTHORITY GIS WEBSITE

(2) FLOW CALCULATED USING TR55

THIS DOCUMENT IS RELEASED FOR THE PURPOSE OF PRELIMINARY REVIEW UNDER THE AUTHORITY OF ERNEST T. MAESTAS, P.E. 52938 ON 8/23/2012 . IT IS NOT TO BE USED FOR CONSTRUCTION OR BIDDING PURPOSES.

MAESTAS & ASSOCIATES INC.
TBPE REGISTRATION No. : F-333
11550 I.H. 10 WEST
SUITE 320
SAN ANTONIO, TEXAS 78230
(210) 366-1988

CITY OF SAN ANTONIO

CAPITAL IMPROVEMENTS MANAGEMENT SERVICES DEPARTMENT

HARRY WURZBACH TAPS MEMORIAL BLVD.

APPENDIX C

EXISTING FLOW CALCULATIONS

SHEET 1 OF 1

PER % SUBMITTAL	PROJECT NO.:		DATE: 8/23/2012
DRWN. BY: CG & KG	DSGN. BY: MJM & JPS	CHKD. BY: ETM	SHEET NO.: OF

INTERIOR DRAINAGE AREA FLOW CALCULATIONS

Area ID	Total Area	C_W	CA	Overland Flow			Time of concentration calculation												Time	Tc	I_{25}	Q_{25}	I_{100}	Q_{100}
							Reach 1		Reach 2		Reach 3		Reach 4		Reach 5		Reach 6							
	Acres			L	slope	T	Length	Vel	Length	Vel	Length	Vel	Length	Vel	Length	Vel	Length	Vel	minutes	minutes	in/hr	cfs	in/hr	cfs
A10	1.3	0.89	1.16	300	4.8%	5	742	6											2	7	9.72	11	12.34	14
A20	1.39	0.97	1.35	300	4.8%	5	742	6											2	7	9.72	13	12.34	17
B10	0.29	0.95	0.28			5														5	11.10	3	13.54	4
B20	0.34	0.95	0.32			5														5	11.10	4	13.54	4
B30	1.02	0.70	0.71	209	6.5%	14	192	2											2	16	6.96	5	9.55	7
B40	0.41	0.95	0.39			5														5	11.10	4	13.54	5
B50	1.04	0.69	0.72	204	6.5%	14	144	2											1	15	7.20	5	10.00	7
B60	0.7	0.95	0.67			5														5	11.10	7	13.54	9
B70	0.84	0.69	0.58	240	6.50%	14	140	2											1	15	7.20	4	10.00	6
B90	10.4	0.64	6.66	84	1.00%	14	1200	6											3	17	6.74	45	9.15	61
B110	1.06	0.71	0.75	280	6.50%	15	230	2											2	17	6.74	5	9.15	7
B130	0.82	0.69	0.57	280	6.50%	15	136	2											1	16	6.96	4	9.55	5
B150	0.93	0.70	0.65	290	6.50%	15	110	2											1	16	6.96	5	9.55	6
C10	2.23	0.75	1.67	223	8.00%	15	495	5											2	17	6.74	11	9.15	15
C20	0.8	0.95	0.76	290	6.50%	13	110	5												13	7.62	6	10.40	8
C30	40.94	0.96	39.38	84	1.0%	15	2437	6											7	22	5.89	232	7.61	300
D10	0.64	0.96	0.61			5														5	11.10	7	13.54	8
D20	0.93	0.96	0.89			5	329	4											1	6	10.33	9	12.88	11
D30	1.09	0.96	1.05			5	360	4											2	7	9.72	10	12.34	13
D50	18.41	0.71	12.99	80	2.0%	12	1870	4											8	20	6.19	80	8.15	106
D70	1.62	0.97	1.57	80	2.0%	12	1870	4											8	20	6.19	10	8.15	13
E10	5.57	0.62	3.45	207	3.8%	15	1100	4											5	20	6.19	21	8.15	28
E20	6.09	0.62	3.78	232	4.0%	16	996	4											4	20	6.19	23	8.15	31
E30	2.94	0.62	1.82	185	5.0%	14	650	4											3	17	6.74	12	9.15	17
E40	2.33	0.62	1.44	200	4.0%	15	640	4											3	18	6.54	9	8.78	13
F10	1.02	0.97	0.99			5	500	5											2	7	9.72	10	12.34	12
F20	1.14	0.97	1.11			5	815	5											3	8	9.22	10	11.89	13
F30	0.63	0.96	0.60			5	217	4											1	6	10.33	6	12.88	8
F50	0.39	0.96	0.37			5														5	11.10	4	13.54	5
F70	0.63	0.96	0.60			5	136	2											1	6	10.33	6	12.88	8
G10	0.49	0.95	0.47			5														5	11.10	5	13.54	6
G20	0.61	0.95	0.58			5														5	11.10	6	13.54	8
G30	11.88	0.62	7.37	170	3.5%	14	205	3	1278	3									8	22	5.89	43	7.61	56
G50	0.33	0.96	0.32			5														5	11.10	4.00	13.54	4
G70	0.47	0.96	0.45			5														5	11.10	5.00	13.54	6
H10	0.57	1.06	0.60	300	2.5%	6	192	4											1	7	9.72	6.00	12.34	7
H20	0.78	0.96	0.75	300	2.5%	6	192	4											1	7	9.72	7.00	12.34	9
H30	2.03	0.83	1.68	300	2.5%	19	174	3												19	6.36	11.00	8.45	14
H50	3.47	0.57	1.98	172	7.0%	13	1200	4											5	18	6.54	13.00	8.78	17
I10	0.77	0.96	0.74			5	340	4											1	6	10.33	8.00	12.88	10
I20	3.7	0.56	2.07	300	3.5%	17	290	4											1	18	6.54	14.00	8.78	18
I30	5.38	0.67	3.62	110	3.5%	12	530	4	826	3									7	19	6.36	23.00	8.45	31
I40	4.38	0.57	2.49	300	3.5%	17	440	4											2	19	6.36	16.00	8.45	21
I60	2.79	0.65	1.82	250	3.0%	16	500	3											3	19	6.36	12.00	8.45	15
J10	0.27	0.95	0.26			5														5	11.10	3.00	13.54	3
J20	0.17	0.95	0.16			5														5	11.10	2.00	13.54	2
J30	0.45	0.95	0.43			5														5	11.10	5.00	13.54	6
J40	0.46	0.95	0.44			5														5	11.10	5.00	13.54	6
J50	0.44	0.95	0.42			5														5	11.10	5.00	13.54	6
J60	0.44	0.95	0.42			5														5	11.10	5.00	13.54	6
J70	0.46	0.95	0.44			5														5	11.10	5.00	13.54	6
J80	0.4	0.95	0.38			5														5	11.10	4.00	13.54	5
J90	0.48	0.95	0.46			5														5	11.10	5.00	13.54	6
J100	0.54	0.95	0.51			5														5	11.10	6.00	13.54	7
K5	16.18	0.96	15.53	300	3.5%	9	225	4	460	6									2	11	8.14	126.00	10.89	169
K8	3.97	0.96	3.81	300	2.0%	10	628	3											3	13	7.62	29.00	10.40	40
K10	31	0.96	29.76	100	7.0%	11	800	2	1600	6									11	22	5.89	175.00	7.61	226
K20	33.89	0.74	24.95	145	1.6%	16	2765	4											12	28	5.18	129.00	6.41	160
K30	18.68	0.67	12.52	121	1.5%	15	2706	4											11	26	5.39	67.00	6.76	85
K40	2.22	0.69	1.53	300	4.5%	16	445	3	198	4									3	19	6.36	10.00	8.45	13
K50	4.25	0.69	2.93	300	6.0%	16	560	4	100	4									3	19	6.36	19.00	8.45	25
K60	0.67	0.69	0.46	300	4.0%	17	150	4											1	18	6.54	3.00	8.78	4
K70	1.42	0.80	1.14	100	3.0%	12	260	3											1	13	7.62	9.00	10.40	12

THIS DOCUMENT IS RELEASED FOR THE PURPOSE OF PRELIMINARY REVIEW UNDER THE AUTHORITY OF ERNEST T. MAESTAS, P.E. 52938 ON 8/23/2012 . IT IS NOT TO BE USED FOR CONSTRUCTION OR BIDDING PURPOSES.

MAESTAS & ASSOCIATES INC.
TBPE REGISTRATION No. : F-333
11550 I.H. 10 WEST
SUITE 320
SAN ANTONIO, TEXAS 78230
(210) 366-1988

CITY OF SAN ANTONIO

CAPITAL IMPROVEMENTS MANAGEMENT SERVICES DEPARTMENT

HARRY WURZBACH TAPS MEMORIAL BLVD.

APPENDIX D

PROPOSED RATIONAL METHOD

FLOW CALCULATIONS

SHEET 1 OF 2

PER % SUBMITTAL	PROJECT NO.:_____	DATE: 8/23/2012
DRWN. BY: CG & KG	DSGN. BY: MJM & JPS CHKD. BY:_____ETM	SHEET NO.:__OF__

INTERIOR DRAINAGE AREA FLOW CALCULATIONS

Area ID	Total Area	C_W	CA	Overland Flow			Time of concentration calculation												Time	Tc	I_{25}	Q_{25}	I_{100}	Q_{100}
							Reach 1		Reach 2		Reach 3		Reach 4		Reach 5		Reach 6							
	Acres			L	slope	T	Length	Vel	Length	Vel	Length	Vel	Length	Vel	Length	Vel	Length	Vel	minutes	minutes	in/hr	cfs	in/hr	cfs
L10	1.52	0.96	1.45	300	1.3%	7	430	3											2	9	8.81	13.00	11.51	17
L20	1.50	0.95	1.43	300	1.3%	7	430	3											2	9	8.81	13.00	11.51	16
L30	0.5	0.95	0.48			5														5	11.10	5.00	13.54	6
L40	0.51	0.95	0.48			5														5	11.10	5.00	13.54	7
L50	0.4	0.97	0.39			5														5	11.10	4.00	13.54	5
L60	0.45	0.97	0.44			5														5	11.10	5.00	13.54	6
L90	0.37	0.96	0.36			5														5	11.10	4.00	13.54	5
L100	0.24	0.95	0.23			5														5	11.10	3.00	13.54	3
L102	0.16	0.95	0.15			5														5	11.10	2.00	13.54	2
L104	0.13	0.96	0.12			5														5	11.10	1.00	13.54	2
L110	0.32	0.49	0.16	300	4.0%	15	325	3											2	17	6.74	1.00	9.15	1
L120	0.39	0.96	0.37			5														5	11.10	4.00	13.54	5
L130	0.29	0.96	0.28			5														5	11.10	3.00	13.54	4
L140	0.25	0.96	0.24			5														5	11.10	3.00	13.54	3
L150	0.28	0.82	0.23			5														5	11.10	3.00	13.54	3
L160	0.21	0.97	0.20	300	4.0%	6	300	6											1	7	9.72	2.00	12.34	3
L170	4.56	0.69	3.15	300	4.5%	16	240	3	608	6									3	19	6.36	20.00	8.45	27
L180	0.76	0.97	0.74	300	1.5%	16	305	3											2	18	6.54	5.00	8.78	6
L190	6.11	0.96	5.87	300	3.0%	6	200	3	290	2									4	10	8.45	50.00	11.18	66
L210	3.68	0.81	2.97	300	6.0%	15	530	4											2	17	6.74	20.00	9.15	27
L230	14.82	0.75	11.10	300	7.0%	15	469	6	426	3									4	20	6.19	69.00	8.15	90
M10	2.13	0.96	2.04	300	1.5%	7	4	3											0	7	9.72	20.00	12.34	25
M20	7.17	0.66	4.74	100	2.0%	13	575	4	520	5	191	4							5	18	6.54	31.00	8.78	42
M30	1.8	0.69	1.24	105	6.0%	10	185	4											1	11	8.14	10.00	10.89	14
M40	2.53	0.69	1.75	168	3.5%	15	243	5											1	16	6.96	12.00	9.55	17
M50	2.33	0.60	1.40	180	5.0%	13	145	3	274	4									2	15	7.20	10.00	10.00	14
N10	0.59	0.95	0.56	300	0.4%	9	400	2											3	12	7.86	4.00	10.64	6
N15	0.28	0.39	0.11	300	0.4%	25	400	1											7	32	4.81	1.00	5.91	1
N20	0.61	0.95	0.58	300	0.4%	9	400	2											3	12	7.86	5.00	10.64	6
N25	0.41	0.49	0.20	300	4.0%	17	700	2											6	23	5.75	1.00	7.37	1
N30	1.19	0.73	0.87			5														5	11.10	10.00	13.54	12
N40	1.18	0.96	1.13	300	2.4%	6	995	5											3	9	8.81	10.00	11.51	13
N50	1.69	0.69	1.16			5	650	5											2	7	9.72	11.00	12.34	14
O10	43.47	0.71	30.87	219	3.0%	16	840	3	1639	4									11	27	5.28	163.00	6.58	203
O20	1.47	0.97	1.43			5														5	11.10	16.00	13.54	19
P10	21.17	0.57	12.07	114	2.0%	14	965	3	325	4	282	5							8	22	5.89	71.00	7.61	92
P20	4.41	0.81	3.59	300	6.3%	16	314	2											3	19	6.36	23.00	8.45	30
Q10	0.57	0.95	0.54	300	0.4%	8	350	2											3	11	8.14	4.00	10.89	6
Q15	0.34	0.39	0.13	300	0.4%	25	140	1											2	27	5.28	1.00	6.58	1
Q20	0.55	0.95	0.52	300	0.4%	8	350	2											3	11	8.14	4.00	10.89	6
Q25	0.2	0.39	0.08	300	0.4%	25	173	1											3	28	5.18	1.00	6.41	0
Q30	0.56	0.95	0.53			5														5	11.10	6.00	13.54	7
Q40	0.56	0.95	0.53			5														5	11.10	6.00	13.54	7
R10	0.62	0.95	0.59	300	0.4%	8	399	2											3	11	8.14	5.00	10.89	6
R15	0.16	0.39	0.06	300	0.4%	25	100	1											2	27	5.28	0.00	6.58	0
R20	0.62	0.95	0.59	300	0.4%	8	399	2											3	11	8.14	5.00	10.89	6
R25	0.06	0.39	0.02	234	0.4%	23														23	5.75	0.00	7.37	0
R30	0.61	0.95	0.58	300	0.4%	8	400	2											3	11	8.14	5.00	10.89	6
R35	0.08	0.49	0.04	283	1.2%	21														21	6.03	0.00	7.87	0
R40	0.62	0.95	0.59	300	0.4%	8	400	2											3	11	8.14	5.00	10.89	6
R45	0.1	0.39	0.04	300	1.2%	21	264	3											1	22	5.89	0.00	7.61	0
R50	0.34	0.96	0.33	300	1.2%	7	264	3											1	8	9.22	3.00	11.89	4
R55	0.1	0.39	0.04	300	0.4%	19	250	1											4	23	5.75	0.00	7.37	0
R60	0.49	0.96	0.47	300	1.2%	7	264	3											1	8	9.22	4.00	11.89	6
R65	0.07	0.39	0.03	300	0.4%	25														25	5.50	0.00	6.95	0
R70	0.72	0.67	0.48	166	3.0%	14	204	3											1	15	7.20	3.00	10.00	5
R80	0.58	0.95	0.55	300	0.4%	8	284	2											2	10	8.45	5.00	11.18	6
R90	1.38	0.69	0.95	300	3.5%	17	280	2											2	19	6.36	6.00	8.45	8
R110	0.88	0.95	0.84	300	3.0%	17	62	3	93	2									1	18	6.54	5.00	8.78	7
S10	3.28	0.57	1.87	284	6.0%	15	350	6											1	16	6.96	13.00	9.55	18
S20	7.3	0.57	4.16	95	2.0%	12	876	4	180	3	328	3							6	18	6.54	27.00	8.78	37
S30	5.08	0.62	3.15	200	6.0%	14	760	6											2	16	6.96	22.00	9.55	30
S40	9.7	0.57	5.53	108	0.7%	16	645	5	622	4	250	6							5	21	6.03	33.00	7.87	43
S50	2.61	0.62	1.62	262	5.0%	15	220	3											1	16	6.96	11.00	9.55	15
S60	0.73	0.53	0.39	140	6.0%	12	230	6											1	13	7.62	3.00	10.40	4

THIS DOCUMENT IS RELEASED FOR THE PURPOSE OF PRELIMINARY REVIEW UNDER THE AUTHORITY OF ERNEST T. MAESTAS, P.E. 52938 ON 8/23/2012 . IT IS NOT TO BE USED FOR CONSTRUCTION OR BIDDING PURPOSES.

MAESTAS & ASSOCIATES INC.
TBPE REGISTRATION No. : F-333
11550 I.H. 10 WEST
SUITE 320
SAN ANTONIO, TEXAS 78230
(210) 366-1988

CITY OF SAN ANTONIO

CAPITAL IMPROVEMENTS MANAGEMENT SERVICES DEPARTMENT

HARRY WURZBACH TAPS MEMORIAL BLVD.

APPENDIX D

PROPOSED RATIONAL METHOD

FLOW CALCULATIONS

SHEET 2 OF 2

PER % SUBMITTAL	PROJECT NO.:		DATE: 8/23/2012
DRWN. BY: CG & KG	DSGN. BY: MJM & JPS	CHKD. BY: ETM	SHEET NO.: OF

APPENDIX D
DFIRM FLOWS

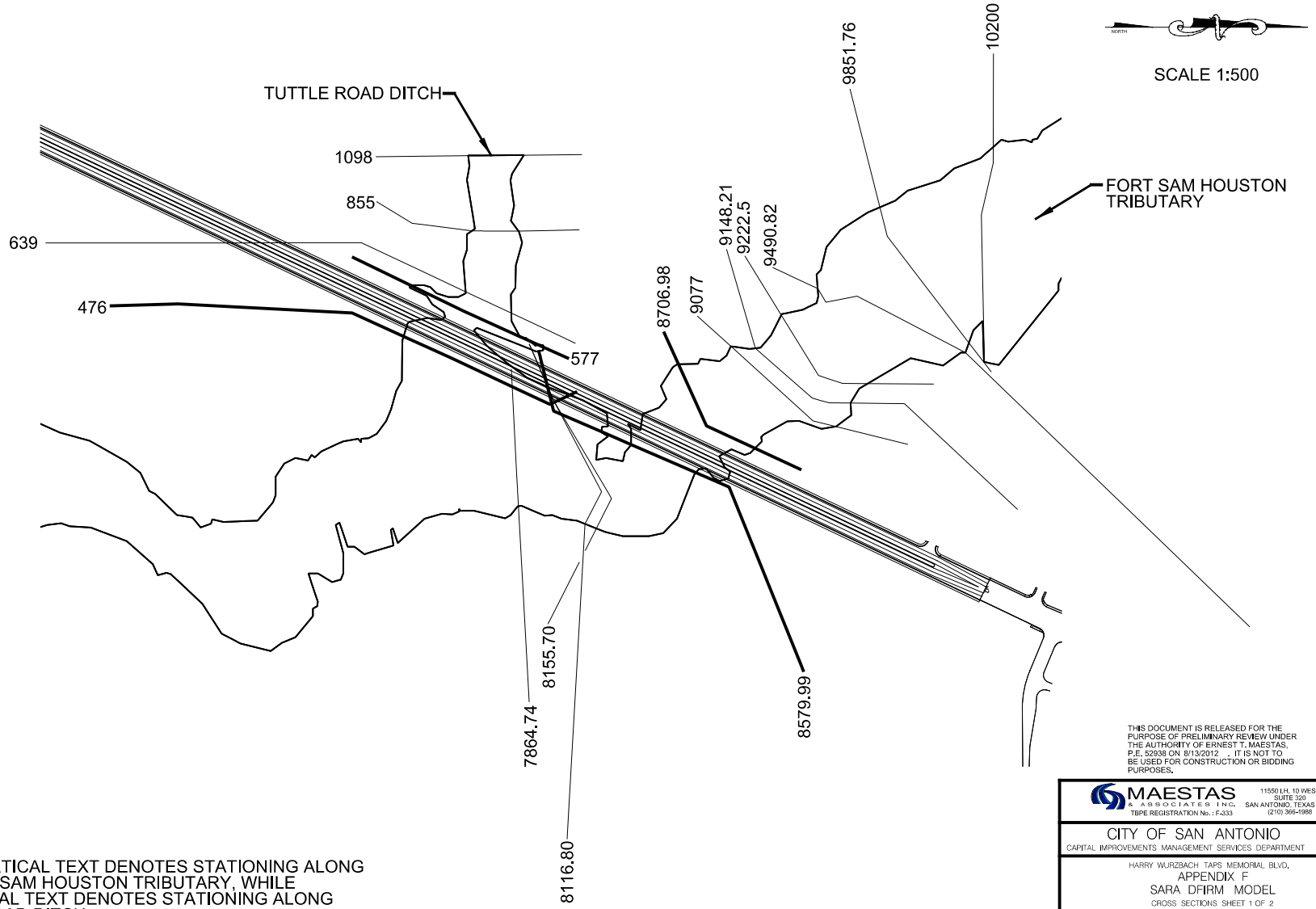

NOTE: VERTICAL TEXT DENOTES STATIONING ALONG THE FORT SAM HOUSTON TRIBUTARY, WHILE HORIZONTAL TEXT DENOTES STATIONING ALONG TUTTLE ROAD DITCH.

THIS DOCUMENT IS RELEASED FOR THE PURPOSE OF PRELIMINARY REVIEW UNDER THE AUTHORITY OF ERNEST T. MAESTAS, P.E. 52938 ON 8/13/2012 . IT IS NOT TO BE USED FOR CONSTRUCTION OR BIDDING PURPOSES.

MAESTAS & ASSOCIATES INC.
TBPE REGISTRATION No.: F-333
11550 I.H. 10 WEST
SUITE 320
SAN ANTONIO, TEXAS 78230
(210) 366-1988

CITY OF SAN ANTONIO
CAPITAL IMPROVEMENTS MANAGEMENT SERVICES DEPARTMENT

HARRY WURZBACH TAPS MEMORIAL BLVD.
APPENDIX F
SARA DFIRM MODEL
CROSS SECTIONS SHEET 1 OF 2

PER % SUBMITTAL	PROJECT NO.:	DATE: 8/13/2012
DRWN. BY: CG & KG	DSGN. BY: MJM & RS	CHKD. BY: ETM	SHEET NO.: OF

FORT SAM HOUSTON TRIBUTARY

Reach	River Sta	Profile	Q Total (cfs)	Min Ch El (ft)	W.S. Elev (ft)	Crit W.S. (ft)	E.G. Elev (ft)	E.G. Slope (ft/ft)	Vel Chnl (ft/s)	Flow Area (sq ft)	Top Width (ft)	Froude # Chl
HR1010514	13874.79 AD	100-YR Flow	1423	739	746.43	746.43	748.5	0.004301	11.54	124.99	37.36	0.99
HR1010514	13664.77 AC	100-YR Flow	1423	735	741.84	741.84	744.27	0.004945	12.49	113.91	23.41	1
HR1010514	13625.5	100-YR Flow	1423	734.6	742.12	742.12	743.31	0.004663	8.75	165.96	101.27	0.99
HR1010514	13600 Rittiman Road		Culvert									
HR1010514	13575.22 AB	100-YR Flow	1423	734.28	739.15	738.94	741.01	0.003889	10.94	130.07	30.5	0.93
HR1010514	13482.17	100-YR Flow	1423	733.95	739	739	740.45	0.003807	9.71	167.78	101.53	0.95
HR1010514	13320	100-YR Flow	1423	731.24	738.65	737.96	738.88	0.00964	4.68	414.19	228.77	0.34
HR1010514	13270	100-YR Flow	1423	730.4	738.27	737.41	738.45	0.007097	4.26	506.32	336.17	0.29
HR1010514	13250 Morning Side Dri		Culvert									
HR1010514	13220	100-YR Flow	1423	729.87	737.75	735.91	737.9	0.007203	3.95	533.03	310.76	0.26
HR1010514	13110 AA	100-YR Flow	1423	729.5	735.78	735.02	736.32	0.004712	6.83	254.56	147.53	0.54
HR1010514	12955.09	100-YR Flow	1423	729	734.58	734.58	735.38	0.002378	9.36	700	414.38	0.71
HR1010514	12907	100-YR Flow	573	729.78	732.51	732.51	732.76	0.059919	5.38	182.5	287.09	0.67
HR1010514	12885 Z	100-YR Flow	573	729.85	731.21	731.21	731.55	0.014884	4.7	121.83	176.56	1
HR1010514	12715	100-YR Flow	573	728	730.45	729.89	730.51	0.001709	1.9	307.25	353.44	0.35
HR1010514	12516	100-YR Flow	1423	722	727.37	727.37	729.74	0.003307	12.68	173.52	69.44	0.97
HR1010514	12391.41 Y	100-YR Flow	1423	720	724.28	724.28	725.78	0.004155	9.83	144.8	47.94	1
HR1010514	12048.8	100-YR Flow	1423	718	722.22	722.22	723.55	0.003838	9.28	165.76	116.65	0.96
HR1010514	11636.02	100-YR Flow	2847	714	720.66	720	722.17	0.002063	10.2	539.36	361.97	0.77
HR1010514	11593.24 X	100-YR Flow	2297	716.32	720.79	720.79	721.98	0.002373	9.74	690.82	420.63	0.82
HR1010514	11533	100-YR Flow	2297	716	720.54	718.9	720.69	0.000724	5.49	1367.94	657.01	0.45
HR1010514	11411	100-YR Flow	4115	710	717.69	717.69	720.26	0.002737	13.36	510.23	152.56	0.92
HR1010514	11375 Canterbury Hill		Culvert									
HR1010514	11335 W	100-YR Flow	4115	710	717.3	717.3	719.53	0.002372	13.06	761.47	254.95	0.87
HR1010514	11234.64	100-YR Flow	4115	709.01	715.99	715.99	718.49	0.002987	13.34	569.89	182.8	0.96
HR1010514	11079.12	100-YR Flow	4115	708	713.69	713.46	715.05	0.003053	9.39	473.26	169.84	0.89
HR1010514	11019.51	100-YR Flow	4115	708	713.93	712.62	714.6	0.001145	6.57	743.43	310.84	0.56
HR1010514	11008 Ivy Lane		Bridge									
HR1010514	11001.08 V	100-YR Flow	4115	708	712.84	712.84	714.48	0.002981	10.63	630.19	302.86	0.91
HR1010514	10885.45	100-YR Flow	4115	706	711.74	711.74	713.25	0.003223	10.24	659.98	310.65	0.93
HR1010514	10657.51 U	100-YR Flow	4115	704	710.4	710.4	711.91	0.00245	12.16	1263.85	460.27	0.86
HR1010514	10431.98	100-YR Flow	4115	702	706.92	706.92	708.33	0.003381	10.02	721.33	347.98	0.93
HR1010514	10270 T	100-YR Flow	4115	700	705.01	705.01	706.06	0.002448	9.87	1491.65	813.27	0.82
HR1010514	10235 Seford Drive		Culvert									
HR1010514	10200	100-YR Flow	4115	700	704.64	704.64	705.68	0.002764	10.18	1475.69	699.01	0.87
HR1010514	9851.76	100-YR Flow	4115	696	702.47	700.08	702.74	0.000395	4.41	1725.93	526.22	0.34
HR1010514	9490.82 S	100-YR Flow	4115	692	700.49	700.49	702.07	0.002195	11.18	1055.76	474.9	0.79
HR1010514	9222.5	100-YR Flow	4115	688	698.34	698.34	700.28	0.001921	12.5	995.58	398.11	0.75
HR1010514	9148.21 R	100-YR Flow	2835	691	697.42	696.89	698.53	0.002005	10.45	1024.53	405	0.75
HR1010514	9077	100-YR Flow	2835	694	697.6	696.48	697.86	0.006885	4.63	898.89	463.63	0.44
HR1010514	8706.98	100-YR Flow	4115	686	695.1	693.19	695.46	0.004652	4.83	944.52	393.28	0.44
HR1010514	8600 Harry Wurzbach R		Culvert									
HR1010514	8579.99 Q	100-YR Flow	4115	686	691.36	690.7	691.64	0.007123	5.27	1086.04	579.38	0.46
HR1010514	8461.88	100-YR Flow	4115	686	690.41	689.51	690.79	0.007358	5.5	943.28	445.73	0.5
HR1010514	8155.7	100-YR Flow	4115	680	687.73	687.73	689.39	0.002712	12.72	786.12	312.19	0.9
HR1010514	8130 Harry Wurzbach R		Bridge									
HR1010514	8116.80 P	100-YR Flow	4115	680	687.97	686.16	688.31	0.004222	5.68	943.42	344.74	0.39
HR1010514	7864.74 O	100-YR Flow	4115	678	685.3	685.3	686.72	0.008596	10.23	556.46	235.09	0.79
HR1010514	7682.31	100-YR Flow	4115	678	684.15	683.57	684.84	0.005631	8.2	916.58	439.68	0.64
HR1010514	7660 Burr Road		Bridge									
HR1010514	7640.16 N	100-YR Flow	4115	676	683.8	683.45	684.66	0.007015	9.14	740.68	339.86	0.71
HR1010514	7342.17 M	100-YR Flow	4115	676	682.93	681.25	683.3	0.002334	5.77	1115.2	351.88	0.42
HR1010514	7320 Bridge		Bridge									
HR1010514	7303.09	100-YR Flow	4115	676	682.54	681.66	682.99	0.003645	7.4	1061.05	367.5	0.53
HR1010514	7157.37	100-YR Flow	4115	674	681.01	681.01	682.11	0.006278	10.21	765.27	343.6	0.71
HR1010514	7125 Burr Road		Culvert									
HR1010514	7102.90 L	100-YR Flow	4115	670	679.33	679.33	680.74	0.004596	10.27	658.11	320.72	0.68
HR1010514	6990.72	100-YR Flow	4115	670	679.46	678.33	679.86	0.002232	8.18	1254.25	357.91	0.49
HR1010514	6970 Bridge		Bridge									
HR1010514	6954.15	100-YR Flow	4115	670	677.76	677.76	678.95	0.006082	11.92	764.97	269.32	0.79
HR1010514	6727.93 K	100-YR Flow	4115	668	677.43	675.28	677.72	0.001261	5.52	1370.63	366.33	0.37
HR1010514	6546.93 J	100-YR Flow	4115	668	675.22	675.22	676.86	0.00745	11.26	541.49	194.85	0.85
HR1010514	6525 Culvert		Culvert									
HR1010514	6505.97	100-YR Flow	4115	666	674.5	673.74	676	0.004281	10.46	579.37	201.02	0.67
HR1010514	6143.29	100-YR Flow	4115	664	674.06	671.77	674.56	0.001747	7.56	1122.92	279.23	0.44
HR1010514	5806.47	100-YR Flow	4115	662	673.96	669.23	674.03	0.00057	2.73	1994.66	425.81	0.15
HR1010514	5700 Burr Road		Culvert									
HR1010514	5625.35	100-YR Flow	4115	662	673.99	667.97	674.03	0.00035	2.37	2567.9	530.32	0.12
HR1010514	5406.7	100-YR Flow	4115	660	673.95	666.53	673.97	0.000161	1.68	3365.11	556.43	0.08
HR1010514	5127.03 I	100-YR Flow	4115	660	673.93	664.65	673.94	0.000062	1.06	4886.66	644.39	0.05
HR1010514	4539.91	100-YR Flow	38605	656	671.29	668.24	672.73	0.006377	11.75	4221.86	553	0.54
HR1010514	4337.39 H	100-YR Flow	38605	654	670.26	666.33	671.63	0.004577	17.51	5328.76	722.24	0.79
HR1010514	4250 Hardee Road		Culvert									
HR1010514	4126.03	100-YR Flow	38605	652	670.33	667.49	671.41	0.006591	12.97	5273.23	944.55	0.55
HR1010514	4100 Hardee Road		Culvert									
HR1010514	4052.19 G	100-YR Flow	38605	650	668.22	668.22	671.14	0.006448	18.85	4253.4	655.62	0.81
HR1010514	3832.71	100-YR Flow	38605	650	664.94	662.62	666.47	0.006036	16.62	4649.76	589.04	0.77
HR1010514	3820 Hardee Road		Culvert									
HR1010514	3807.74 F	100-YR Flow	38605	648	663.07	663.07	666.3	0.008053	21.98	3845.39	536.34	1.03

TUTTLE ROAD DITCH

Reach	River Sta	Profile	Q Total (cfs)	Min Ch El (ft)	W.S. Elev (ft)	Crit W.S. (ft)	E.G. Elev (ft)	E.G. Slope (ft/ft)	Vel Chnl (ft/s)	Flow Area (sq ft)	Top Width (ft)	Froude # Chl
HR1010512	1098	100-yr	1488	692	697.16	697.16	698.21	0.010061	8.72	271.58	181.06	0.89
HR1010512	855 E	100-yr	1488	690	693.93	693.88	695.01	0.010339	8.66	239.11	154.34	0.9
HR1010512	639 D	100-yr	1488	686	692.38		693.32	0.005869	8.13	280.76	143.1	0.71
HR1010512	577	100-yr	1488	683.92	692.77	689.28	692.99	0.000815	4.39	895.55	432.22	0.28
HR1010512	525 Harry Wurzbach R		Culvert									
HR1010512	476 C	100-yr	1488	684	688.73	688.73	689.6	0.006939	8.04	279.65	193.47	0.76
HR1010512	349	100-yr	1488	683.23	685.34	685.09	685.8	0.011768	7.08	337.12	228.15	0.9
HR1010512	144 B	100-yr	1488	678	681.87	681.87	683.01	0.013598	8.57	173.68	136.21	1
HR1010512	98	100-yr	1488	674.25	681.49	681.01	682.53	0.005366	9.08	251.95	405.95	0.69
HR1010512	80 Burr Road		Bridge									
HR1010512	64 A	100-yr	1488	676	680.64	680.64	681.44	0.006167	8.22	328.01	385.9	0.73
HR1010512	7	100-yr	1488	676	678.09	678.09	679.02	0.01337	7.83	205.15	160.14	0.97

NOTE: DFIRM MODEL FLOWRATES AND TAILWATER ELEVATIONS WERE USED FOR THE CROSS DRAINAGE DESIGN.

THIS DOCUMENT IS RELEASED FOR THE PURPOSE OF PRELIMINARY REVIEW UNDER THE AUTHORITY OF ERNEST T. MAESTAS, P.E. 52938 ON 8/13/2012 . IT IS NOT TO BE USED FOR CONSTRUCTION OR BIDDING PURPOSES.

MAESTAS & ASSOCIATES INC.
TBPE REGISTRATION No.: F-333
11550 I.H. 10 WEST
SUITE 320
SAN ANTONIO, TEXAS 78230
(210) 366-1988

CITY OF SAN ANTONIO
CAPITAL IMPROVEMENTS MANAGEMENT SERVICES DEPARTMENT

HARRY WURZBACH TAPS MEMORIAL BLVD.
APPENDIX F
SARA DFIRM MODEL
CROSS SECTIONS SHEET 2 OF 2

PER % SUBMITTAL	PROJECT NO.:		DATE: 8/13/2012
DRWN. BY: CG & KG	DSGN. BY: MJM & RS	CHKD. BY: ETM	SHEET NO.: OF

APPENDIX D

TR 55 FLOWS

WinTR-55 Current Data Description

--- Identification Data ---

User: E Maestas
Project: Harry Wurzbach
SubTitle:
State: Texas
County: Bexar
Filename: Z:\Projects\Harry_Wurzbach\DRAINAGE\Area 80.w55

Date: 8/7/2012
Units: English
Areal Units: Acres

--- Sub-Area Data ---

Name	Description	Reach	Area(ac)	RCN	Tc
Area 80	Old area G	Outlet	405	73	0.430

Total area: 405 (ac)

--- Storm Data --

Rainfall Depth by Rainfall Return Period

2-Yr (in)	5-Yr (in)	10-Yr (in)	25-Yr (in)	50-Yr (in)	100-Yr (in)	500-Yr (in)
4.44	5.36	6.0	7.5	9.0	10.0	13.7

Storm Data Source: User-provided custom storm data
Rainfall Distribution Type: Type II
Dimensionless Unit Hydrograph: <standard>

E Maestas

Harry Wurzbach

Bexar County, Texas

Sub-Area Summary Table

Sub-Area Identifier	Drainage Area (ac)	Time of Concentration (hr)	Curve Number	Receiving Reach	Sub-Area Description
Area 80	405.00	0.430	73	Outlet	Old area G

Total Area: 405 (ac)

E Maestas

Harry Wurzbach

Bexar County, Texas

Watershed Peak Table

Sub-Area or Reach Identifier	Peak Flow by Rainfall Return Period 25-Yr (cfs)	100-Yr (cfs)
SUBAREAS		
Area 80	1709.46	2567.69
REACHES		
OUTLET	1709.46	2567.69

GEOPAK HYDRAULIC CONVEYANCE

U.S. Node	D.S. Node	Actual Length	Hyd. Length	N Value	Slope	No. Barrels	Span	Rise	Fs	Soffit U.S.	Soffit D.S.	Invert U.S.	Invert D.S.	Unif. Depth	Unif. Vel.	Act. Vel. D.S.	Act. Depth U.S.	Act. Depth D.S.	HGL U.S.	HGL D.S.	EGL U.S.	EGL D.S.	Q
SYSTEM A																							
A5	A	166.89	168.89	0.012	0.55	1	n/a	2	0.0083	721.41	720.50	719.41	718.50	2.00	7.84	7.64	2.00	2.00	720.50	723.58	721.41	724.49	24
A10	A5	22.58	26.42	0.012	0.50	1	n/a	2	0.0051	721.61	721.50	719.61	719.50	0.73	4.79	1.59	2.00	2.00	723.58	723.63	724.49	723.67	5
A15	A5	429.96	433.96	0.012	2.79	1	n/a	2	0.0279	740.00	728.00	738.00	726.00	0.74	11.32	11.32	2.00	0.74	726.74	740.22	728.73	740.75	12
A20	A5	46.58	50.42	0.012	0.50	1	n/a	2	0.0051	721.73	721.50	719.73	719.50	0.88	5.26	2.23	2.00	2.00	723.58	723.70	724.49	723.78	7
A30	A15	22.60	32.07	0.012	0.44	1	n/a	2	0.0045	747.10	747.00	745.10	745.00	0.84	4.82	4.79	1.25	0.84	745.84	746.35	746.20	746.63	6
A40	A15	46.57	56.05	0.012	0.21	1	n/a	2	0.0022	747.10	747.00	745.10	745.00	1.03	3.69	4.60	1.25	0.87	745.87	746.35	740.75	746.56	6
SYSTEM B																							
B5	B	88.91	92.41	0.013	0.53	1	5	4	0.0054	720.98	720.50	716.98	716.50	2.01	9.05	4.55	4.00	4.00	720.50	722.04	720.82	722.45	91
B10	B5	21.45	29.28	0.012	0.50	1	n/a	2	0.0049	721.11	721.00	719.11	719.00	0.56	4.12	0.95	2.00	2.00	722.04	722.05	722.45	722.07	3
B15	B5	188.05	195.05	0.012	0.51	1	5	4	0.0051	721.96	721.00	717.96	717.00	1.83	9.20	4.20	4.00	4.00	722.04	723.27	722.45	723.54	84
B20	B5	45.14	54.52	0.012	0.50	1	n/a	2	0.0050	721.23	721.00	719.23	719.00	0.65	4.49	1.27	2.00	2.00	722.04	722.08	722.45	722.10	4
B25	B15	136.66	143.66	0.013	0.51	1	5	4	0.0051	722.70	722.00	718.70	718.00	1.86	8.51	3.95	4.00	4.00	723.27	724.40	723.54	724.64	79
B30	B15	21.39	29.21	0.012	0.50	1	n/a	2	0.0051	722.11	722.00	720.11	720.00	0.73	4.79	1.59	2.00	2.00	723.27	723.32	723.54	723.36	5
B35	B25	200.50	207.50	0.013	0.51	1	4	4	0.0051	723.77	722.75	719.77	718.75	1.86	7.95	3.69	4.00	4.00	724.40	725.44	724.64	725.65	59
B40	B25	45.67	51.00	0.012	0.37	1	n/a	2	0.0037	722.92	722.75	720.92	720.75	1.28	5.20	3.50	2.00	2.00	724.40	724.75	724.64	724.94	11
B45	B35	212.83	219.83	0.012	0.51	1	n/a	3	0.0051	724.88	723.80	721.88	720.80	0.85	5.49	1.27	3.00	3.00	725.44	726.61	725.65	726.64	9
B50	B25	20.76	26.09	0.012	0.83	1	n/a	2	0.0084	722.92	722.75	720.92	720.75	0.88	6.76	2.86	2.00	2.00	724.40	724.59	724.64	724.72	9
B55	B45	131.41	136.91	0.013	0.49	1	n/a	2	0.0048	725.54	724.90	723.54	722.90	0.69	4.17	1.27	2.00	2.00	726.61	726.69	726.64	726.71	4
B60	B40	29.53	45.12	0.012	0.50	1	n/a	2	0.0051	723.15	723.00	721.15	721.00	0.88	5.26	2.23	2.00	2.00	724.75	724.86	724.94	724.94	7
B70	B50	30.84	40.84	0.012	0.50	1	n/a	2	0.0050	723.15	723.00	721.15	721.00	0.65	4.49	1.27	2.00	2.00	724.59	724.63	724.72	724.65	4
B90	B35	20.00	25.92	0.012	0.50	1	n/a	3.5	0.0050	723.90	723.80	720.40	720.30	2.05	8.52	5.20	3.50	3.50	725.44	725.52	725.65	725.94	50
B110	B90	21.90	28.32	0.013	0.50	1	n/a	3.5	0.0049	724.04	723.93	720.54	720.43	2.03	7.79	4.68	3.50	3.50	725.52	725.92	725.94	726.26	45
B130	B45	20.68	28.50	0.013	0.50	1	n/a	2	0.0049	725.00	724.90	723.00	722.90	0.77	4.48	1.59	2.00	2.00	726.61	726.67	726.64	726.70	5
B150	B55	21.00	25.42	0.013	0.95	1	n/a	2	0.0096	726.20	726.00	724.20	724.00	0.58	5.34	1.27	2.00	2.00	726.69	726.72	726.71	726.75	4
SYSTEM C																							
C5	C	239.39	243.39	0.013	0.48	1	n/a	2	0.0123	701.07	699.91	699.07	697.91	2.00	8.82	8.59	2.00	2.00	699.91	706.93	701.06	708.08	27
C10	C5	19.07	39.92	0.013	0.84	1	n/a	2	0.0083	704.09	703.93	702.09	701.93	1.67	7.49	6.68	2.00	2.00	706.93	707.44	708.08	708.14	21
C20	C5	45.58	51.42	0.012	0.50	1	n/a	2	0.0050	704.16	703.93	702.16	701.93	0.81	5.00	1.91	2.00	2.00	706.93	707.02	708.08	707.07	6
C30	C10	37.68	55.78	0.013	1.06	1	n/a	2	0.0106	705.40	705.00	703.40	703.00	0.92	7.12	3.18	2.00	2.00	707.44	707.71	708.14	707.87	10
SYSTEM D																							
D5	D	46.32	49.32	0.012	0.52	1	n/a	3.5	0.0098	700.65	700.41	697.15	696.91	3.50	12.37	12.06	3.50	3.50	700.41	702.19	702.67	704.45	116
D10	D5	20.58	25.42	0.012	0.50	1	n/a	2	0.0051	702.10	702.00	700.10	700.00	0.88	5.26	2.23	2.00	2.00	702.19	702.29	704.45	702.36	7
D15	D5	222.14	228.14	0.012	0.50	1	n/a	3.5	0.0073	703.12	702.00	699.62	698.50	3.50	10.66	10.39	3.50	3.50	702.19	704.71	704.45	706.39	100
D20	D5	46.58	51.42	0.012	0.50	1	n/a	2	0.0049	702.23	702.00	700.23	700.00	1.03	5.54	2.86	2.00	2.00	702.19	702.39	704.45	702.51	9
D25	D15	62.13	68.13	0.012	0.52	1	n/a	3.5	0.0059	703.47	703.15	699.97	699.65	3.50	9.60	9.35	3.50	3.50	704.71	705.48	706.39	706.84	90
D30	D15	20.59	38.37	0.012	0.82	1	n/a	2	0.0081	703.32	703.15	701.32	701.15	0.95	6.84	3.18	2.00	2.00	704.71	704.94	706.39	705.09	10
D35	D25	68.26	73.26	0.012	0.51	1	n/a	2	0.0051	704.85	704.50	702.85	702.50	1.09	5.74	3.18	2.00	2.00	705.48	705.81	706.84	705.97	10
D50	D25	44.64	63.81	0.012	0.50	1	n/a	3	0.0106	703.72	703.50	700.72	700.50	3.00	11.61	11.32	3.00	3.00	705.48	708.25	706.84	710.25	80
D70	D35	35.31	39.15	0.012	0.50	1	n/a	2	0.0051	704.08	703.90	702.08	701.90	1.09	5.74	3.18	2.00	2.00	705.81	706.04	705.97	706.19	10
SYSTEM E/F																							
F5	F	81.10	84.60	0.012	0.59	1	n/a	4	0.0059	687.87	687.39	683.87	683.39	2.82	10.68	8.04	4.00	4.00	687.39	688.63	688.39	689.68	101
F10	F5	33.15	55.15	0.012	0.51	1	n/a	2.5	0.0074	688.07	687.90	685.57	685.40	2.50	8.57	8.35	2.50	2.50	688.63	690.15	689.68	691.23	41
E10	F10	23.81	50.56	0.012	0.50	1	n/a	2.5	0.0049	688.22	688.10	685.72	685.60	1.50	6.81	4.28	2.50	2.50	690.15	690.29	691.23	690.57	21
E11	E10	46.16	50.47	0.012	1.08	1	n/a	2	0.0108	691.40	690.90	689.40	688.90	0.89	7.72	7.39	1.76	0.92	689.82	691.16	690.68	691.52	11
F20	F10	33.12	55.13	0.012	0.50	1	n/a	2	0.0051	688.07	687.90	686.07	685.90	1.09	5.74	3.18	2.00	2.00	690.15	690.40	691.23	690.55	10
F15	F5	297.17	304.17	0.012	0.82	1	n/a	4	0.0083	692.33	689.90	688.33	685.90	1.82	10.79	10.69	3.14	1.83	687.73	691.47	689.51	692.43	60
E20	F15	44.75	49.71	0.012	1.43	1	n/a	2	0.0143	700.00	699.36	698.00	697.36	1.33	10.33	9.72	2.00	1.41	698.77	701.45	700.24	701.73	23
F25	F15	291.41	297.91	0.012	0.50	1	n/a	3.5	0.0050	700.83	699.36	697.33	695.86	1.71	7.94	7.94	2.35	1.71	697.57	699.68	698.55	700.44	37
E30	F25	70.65	78.65	0.012	0.50	1	n/a	2	0.0049	701.21	700.86	699.21	698.86	1.23	5.91	5.91	2.00	1.23	700.09	701.26	700.63	701.79	12
E31	E30	47.08	51.39	0.012	2.12	1	n/a	2	0.0212	707.00	706.00	705.00	704.00	0.55	8.45	8.01	1.25	0.58	704.58	706.25	705.58	706.54	6
F35	F25	78.16	84.16	0.012	0.51	1	n/a	3	0.0051	704.26	703.86	701.26	700.86	1.47	7.23	7.23	2.06	1.48	702.34	703.32	703.15	703.97	25
E40	F35	45.81	50.64	0.012	0.50	1	n/a	2	0.0049	705.23	705.00	703.23	703.00	1.03	5.54	5.54	1.60	1.03	704.03	704.83	704.50	705.16	9
F45	F35	132.15	137.65	0.012	0.48	1	n/a	2.5	0.0047	705.96	705.32	703.46	702.82	1.28	6.30	6.30	1.72	1.28	704.10	705.18	704.72	705.73	16
F30	F45	34.08	44.06	0.012	0.50	1	n/a	2	0.0050	706.17	706.00	704.17	704.00	0.81	5.00	3.10	1.25	1.18	705.18	705.42	705.73	705.66	6
F50	F55	34.58	44.06	0.012	0.50	1	n/a	2	0.0050	706.57	706.40	704.57	704.40	0.65	4.49	1.69	1.30	1.41	705.81	705.87	706.27	705.93	4
F55	F45	62.67	67.17	0.012	0.56	1	n/a	2	0.0055	706.30	705.95	704.30	703.95	1.06	5.94	5.94	1.51	1.06	705.01	705.81	705.55	706.27	10
F65	F55	142.86	146.86	0.012	0.50	1	n/a	2	0.0050	707.03	706.32	705.03	704.32	0.81	5.00	5.00	1.27	0.81	705.13	706.30	705.52	706.63	6
F70	F65	34.04	41.92	0.012	0.50	1	n/a	2	0.0050	705.17	705.00	703.17	703.00	0.81	5.00	1.91	2.00	2.00	706.30	706.38	706.63	706.44	6

THIS DOCUMENT IS RELEASED FOR THE PURPOSE OF PRELIMINARY REVIEW UNDER THE AUTHORITY OF ERNEST T. MAESTAS, P.E. 52938 ON 8/23/2012 . IT IS NOT TO BE USED FOR CONSTRUCTION OR BIDDING PURPOSES.

MAESTAS & ASSOCIATES INC.
TBPE REGISTRATION No. : F-333
11550 I.H. 10 WEST
SUITE 320
SAN ANTONIO, TEXAS 78230
(210) 366-1988

CITY OF SAN ANTONIO

CAPITAL IMPROVEMENTS MANAGEMENT SERVICES DEPARTMENT

HARRY WURZBACH TAPS MEMORIAL BLVD.

APPENDIX E

HYDRAULIC CONVEYANCE SHEET

SHEET 1 OF 4

PER % SUBMITTAL	PROJECT NO.:		DATE: 8/23/2012
DRWN. BY: CG & KG	DSGN. BY: MJM & JPS	CHKD. BY: ETM	SHEET NO.: OF

GEOPAK HYDRAULIC CONVEYANCE

U.S. Node	D.S. Node	Actual Length	Hyd. Length	N Value	Slope	No. Barrels	Span	Rise	Fs	Soffit U.S.	Soffit D.S.	Invert U.S.	Invert D.S.	Unif. Depth	Unif. Vel.	Act. Vel. D.S.	Act. Depth U.S.	Act. Depth D.S.	HGL U.S.	HGL D.S.	EGL U.S.	EGL D.S.	Q
SYSTEM G																							
G5	G	47.95	51.45	0.012	0.52	1	n/a	4	0.0052	687.64	687.39	683.64	683.39	2.14	9.20	5.01	4.00	4.00	687.39	687.73	687.78	688.14	63
G10	G5	33.08	38.42	0.012	0.50	1	n/a	2	0.0051	687.84	687.67	685.84	685.67	0.73	4.79	1.59	1.95	2.00	687.73	687.78	688.14	687.82	5
G15	G5	200.43	207.43	0.012	0.51	1	n/a	4	0.0050	688.69	687.67	684.69	683.67	1.94	8.63	4.14	3.16	4.00	687.73	687.84	688.14	688.23	52
G20	G5	33.08	38.42	0.012	0.50	1	n/a	2	0.0050	687.84	687.67	685.84	685.67	0.81	5.00	1.91	1.97	2.00	687.73	687.81	688.14	687.87	6
G25	G15	34.62	41.12	0.012	0.41	1	n/a	3.5	0.0041	688.86	688.72	685.36	685.22	2.26	7.92	6.72	3.50	2.62	687.84	690.70	688.23	691.48	52
G29	G50	24.55	34.55	0.012	3.26	1	n/a	3	0.0326	691.10	690.30	688.10	687.30	1.19	16.56	6.08	3.00	3.00	691.27	691.46	691.96	692.04	43
G30	G29	43.69	48.65	0.012	0.50	1	n/a	2.5	0.0050	689.04	688.82	686.54	686.32	1.52	6.87	4.38	2.50	2.50	691.46	691.87	692.04	692.17	22
G35	G25	77.14	83.14	0.012	0.57	1	n/a	2	0.0057	689.33	688.89	687.33	686.89	0.71	4.99	1.59	2.00	2.00	690.70	690.78	691.48	690.82	5
G50	G25	33.58	38.42	0.012	0.50	1	n/a	3	0.0050	689.06	688.89	686.06	685.89	2.27	8.20	6.65	3.00	3.00	690.70	691.27	691.48	691.96	47
G70	G35	33.58	44.06	0.012	0.50	1	n/a	2	0.0051	689.53	689.36	687.53	687.36	0.73	4.79	1.59	2.00	2.00	690.78	690.84	690.82	690.88	5
SYSTEM H																							
H5	H	108.00	110.00	0.012	0.36	1	n/a	2	0.0076	688.39	688.00	686.39	686.00	2.00	7.51	7.32	2.00	2.00	688.00	690.07	688.83	690.90	23
H30	H5	34.58	38.42	0.012	0.50	1	n/a	2	0.0076	688.59	688.42	686.59	686.42	2.00	7.51	7.32	2.00	2.00	690.07	690.71	690.90	691.54	23
H50	H30	41.70	53.21	0.012	0.50	1	n/a	2	0.0050	688.83	688.62	686.83	686.62	1.29	6.06	4.14	2.00	2.00	690.71	691.13	691.54	691.39	13
SYSTEM I																							
I5	I	379.29	381.29	0.012	0.50	1	n/a	3.5	0.0050	691.65	689.75	688.15	686.25	2.82	9.14	7.90	3.50	3.50	689.75	692.78	690.72	693.87	76
I10	I5	34.58	38.42	0.012	0.50	1	n/a	2	0.0050	691.17	691.00	689.17	689.00	0.95	5.41	2.55	2.00	2.00	692.78	692.93	693.87	693.03	8
I15	I5	209.71	213.71	0.012	0.50	1	n/a	3	0.0050	697.43	696.38	694.43	693.38	2.64	8.20	8.95	3.00	2.39	695.77	698.75	693.87	699.81	54
I20	I5	34.58	38.42	0.012	0.50	1	n/a	2	0.0050	691.17	691.00	689.17	689.00	1.36	6.13	4.46	2.00	2.00	692.78	693.22	693.87	693.53	14
I23	I15	394.21	398.21	0.012	0.50	1	n/a	2.5	0.0063	705.25	703.28	702.75	700.78	2.50	7.94	8.69	2.50	2.08	702.86	706.02	699.81	706.95	38
I24	I23	34.62	49.59	0.012	0.50	1	n/a	2	0.0050	705.07	704.90	703.07	702.90	0.33	3.00	0.32	2.00	2.00	706.02	706.02	706.95	706.03	1
I25	I23	90.29	94.29	0.012	0.50	1	n/a	2.5	0.0060	710.75	710.30	708.25	707.80	2.50	7.73	8.55	2.50	2.06	709.86	714.27	706.95	715.18	37
I30	I25	34.62	44.10	0.012	0.50	1	n/a	2	0.0090	709.57	709.40	707.57	707.40	2.00	8.16	7.96	2.00	2.00	714.27	715.71	715.18	716.69	25
I40	I15	34.59	58.99	0.012	0.50	1	n/a	2	0.0049	702.97	702.80	700.97	700.80	1.53	6.22	6.60	2.00	1.44	702.24	703.35	699.81	703.75	16
I60	I25	34.54	49.51	0.012	0.50	1	n/a	2	0.0049	709.57	709.40	707.57	707.40	1.23	5.91	3.82	2.00	2.00	714.27	714.61	715.18	714.84	12
SYSTEM J/JK																							
J5	J	81.42	84.42	0.013	0.62	1	8	4	0.0061	720.94	720.43	716.94	716.43	2.82	12.52	12.01	3.43	2.94	719.37	720.37	721.61	722.06	282
J10	J15	20.58	25.42	0.012	0.50	1	n/a	2	0.0049	721.19	721.09	719.19	719.09	0.56	4.12	1.26	1.35	1.42	720.51	720.54	722.19	720.57	3
J15	J5	15.65	21.65	0.013	0.56	1	8	4	0.0055	721.06	720.97	717.06	716.97	2.91	12.04	11.21	3.45	3.12	720.09	720.51	722.05	722.19	280
J20	J5	46.58	51.42	0.012	0.50	1	n/a	2	0.0050	721.20	720.97	719.20	718.97	0.46	3.68	0.85	1.18	1.40	720.37	720.39	722.06	720.40	2
J25	J15	116.47	122.47	0.013	0.51	1	8	4	0.0051	722.68	722.09	718.68	718.09	2.97	11.66	11.48	3.37	3.02	721.11	722.05	723.15	723.72	277
J30	J35	20.58	31.06	0.012	0.50	1	6	4	0.0049	722.08	721.98	718.08	717.98	2.20	10.17	5.58	4.00	4.00	723.71	723.79	725.38	724.27	134
JK20	J30	18.63	29.10	0.012	2.68	1	6	4	0.0268	725.50	725.00	721.50	721.00	1.18	18.17	12.77	4.00	1.68	722.68	725.63	725.22	726.40	129
J35	J25	47.09	53.09	0.013	0.52	1	8	4	0.0051	722.96	722.71	718.96	718.71	2.97	11.66	11.33	4.00	3.06	721.77	723.71	723.76	725.38	277
J40	J35	46.58	57.06	0.012	0.50	1	n/a	2	0.0051	721.94	721.71	719.94	719.71	0.73	4.79	1.59	2.00	2.00	723.71	723.77	725.38	723.81	5
J45	J35	295.98	301.48	0.012	0.50	1	6	4	0.0050	724.96	723.48	720.96	719.48	2.23	10.33	10.31	3.63	2.23	721.71	724.59	723.36	725.87	138
J50	J45	21.08	25.42	0.012	0.81	1	n/a	4.5	0.0080	723.68	723.51	719.18	719.01	1.91	11.17	4.53	4.50	4.50	724.59	724.65	725.87	724.97	72
JK30	J50	23.63	28.46	0.012	2.12	1	n/a	4	0.0211	726.50	726.00	722.50	722.00	1.49	15.67	11.42	3.81	1.90	723.90	726.31	725.93	727.08	67
J55	J45	310.41	315.41	0.012	0.48	1	n/a	4	0.0049	726.51	725.01	722.51	721.01	2.14	8.91	8.86	3.61	2.15	723.16	726.12	724.38	727.10	61
J60	J45	47.08	51.42	0.012	0.50	1	n/a	2	0.0051	723.75	723.51	721.75	721.51	0.73	4.79	1.59	2.00	2.00	724.59	724.66	725.87	724.69	5
J65	J55	320.10	324.60	0.012	0.44	1	n/a	4	0.0045	728.47	727.05	724.47	723.05	1.28	6.66	2.22	2.11	3.07	726.12	726.58	727.10	727.04	23
J70	J55	21.08	25.42	0.012	0.81	1	n/a	2	0.0166	725.22	725.05	723.22	723.05	2.00	11.10	10.82	2.00	2.00	726.12	727.09	727.10	728.91	34
JK40	J70	22.88	27.71	0.012	2.19	1	n/a	3	0.0219	726.00	725.50	723.00	722.50	1.07	12.87	4.10	3.00	3.00	727.09	727.39	728.91	727.65	29
J80	J55	47.08	51.42	0.012	0.50	1	n/a	2	0.0050	725.29	725.05	723.29	723.05	0.65	4.49	1.27	2.00	2.00	726.12	726.16	727.10	726.18	4
J90	J65	21.58	25.42	0.012	0.50	1	n/a	2	0.0050	726.61	726.50	724.61	724.50	1.61	6.26	5.41	2.00	2.00	726.58	726.77	727.04	727.22	17
JK60	J90	20.81	25.64	0.012	2.40	1	n/a	2	0.0241	727.00	726.50	725.00	724.50	0.77	10.73	3.82	2.00	2.00	726.77	727.02	727.22	727.31	12
J100	J65	47.58	51.42	0.012	0.50	1	n/a	2	0.0050	726.74	726.50	724.74	724.50	0.81	5.00	1.91	1.93	2.00	726.58	726.67	727.04	726.73	6
SYSTEM K																							
K6	K5	742.27	742.27	0.035	1.00	1	10	3	0.0101	726.12	718.69	723.12	715.69	2.09	5.48	3.26	2.56	3.00	723.17	725.68	723.18	726.14	186
K5	K8	106.46	106.46	0.035	1.00	1	15	8	0.0100	718.69	717.63	710.69	709.63	2.33	6.10	1.00	8.00	8.00	723.13	723.17	723.22	723.18	312

THIS DOCUMENT IS RELEASED FOR THE PURPOSE OF PRELIMINARY REVIEW UNDER THE AUTHORITY OF ERNEST T. MAESTAS, P.E. 52938 ON 8/23/2012 . IT IS NOT TO BE USED FOR CONSTRUCTION OR BIDDING PURPOSES.

MAESTAS & ASSOCIATES INC.
TBPE REGISTRATION No. : F-333
11550 I.H. 10 WEST
SUITE 320
SAN ANTONIO, TEXAS 78230
(210) 366-1988

CITY OF SAN ANTONIO

CAPITAL IMPROVEMENTS MANAGEMENT SERVICES DEPARTMENT

HARRY WURZBACH TAPS MEMORIAL BLVD.

APPENDIX E

HYDRAULIC CONVEYANCE SHEET

SHEET 2 OF 4

PER % SUBMITTAL	PROJECT NO.:_____	DATE: 8/23/2012
DRWN. BY: CG & KG	DSGN. BY: MJM & JPS CHKD. BY: ETM	SHEET NO.: OF

GEOPAK HYDRAULIC CONVEYANCE

U.S. Node	D.S. Node	Actual Length	Hyd. Length	N Value	Slope	No. Barrels	Span	Rise	Fs	Soffit U.S.	Soffit D.S.	Invert U.S.	Invert D.S.	Unif. Depth	Unif. Vel.	Act. Vel. D.S.	Act. Depth U.S.	Act. Depth D.S.	HGL U.S.	HGL D.S.	EGL U.S.	EGL D.S.	Q
SYSTEM L																							
L1	L	1742.94	1746.44	0.012	0.50	1	4	4	0.0049	696.71	688.00	692.71	684.00	2.91	9.71	9.71	4.00	2.91	686.91	697.53	688.37	698.99	113
L2	L1	68.01	75.01	0.012	0.50	1	4	4	0.0049	697.08	696.74	693.08	692.74	2.91	9.71	7.06	4.00	4.00	697.53	698.29	698.99	699.07	113
L3	L2	991.84	998.84	0.012	0.50	1	4	4	0.0049	702.07	697.11	698.07	693.11	2.91	9.71	9.71	3.30	2.91	696.02	701.37	697.48	702.82	113
L4	L3	55.72	62.72	0.012	0.50	1	4	4	0.0049	702.38	702.10	698.38	698.10	2.91	9.71	8.65	3.33	3.27	701.37	701.71	702.82	703.14	113
L6	L4	121.96	128.96	0.012	0.52	1	4	4	0.0052	703.55	702.91	699.55	698.91	2.85	9.93	9.93	3.17	2.85	701.76	702.72	703.29	704.18	113
L20	L6	41.45	46.78	0.012	0.51	1	4	4	0.0051	703.76	703.55	699.76	699.55	2.75	9.72	8.44	3.09	3.17	702.72	702.85	704.18	704.16	107
L100	L6	41.98	50.48	0.012	0.87	1	n/a	4	0.0088	711.78	711.41	707.78	707.41	0.55	5.70	5.57	0.82	0.56	707.97	708.60	708.46	708.84	6
L5	L20	47.58	51.42	0.012	0.36	1	4	4	0.0036	706.12	705.95	702.12	701.95	2.85	8.26	9.11	4.00	2.58	704.53	706.23	704.16	707.35	94
L102	L100	188.23	198.23	0.012	0.50	1	n/a	2	0.0049	727.00	726.06	725.00	724.06	0.56	4.12	4.12	0.71	0.56	724.62	725.71	724.89	725.93	3
L10	L5	21.58	25.42	0.012	0.50	1	n/a	3	0.0050	706.26	706.15	703.26	703.15	1.03	6.02	1.84	3.00	3.00	706.23	706.29	707.35	706.34	13
L15	L5	613.27	617.27	0.012	0.34	1	n/a	2	0.0052	708.87	706.81	706.87	704.81	2.00	6.20	7.19	2.00	1.57	706.38	710.75	707.35	711.32	19
L45	L5	242.78	246.78	0.012	0.35	1	n/a	3.5	0.0035	709.15	708.31	705.65	704.81	2.77	7.59	8.55	2.82	2.47	707.28	708.47	707.35	709.38	62
L104	L102	189.89	199.89	0.012	0.50	1	n/a	2	0.0050	727.98	727.03	725.98	725.03	0.33	3.00	3.00	0.47	0.33	725.36	726.45	725.50	726.58	1
L25	L15	107.67	111.67	0.012	0.50	1	n/a	2	0.0051	714.79	714.25	712.79	712.25	1.09	5.74	5.71	1.56	1.09	713.34	714.34	713.85	714.81	10
L50	L15	50.08	53.92	0.012	0.50	1	n/a	2	0.0050	714.50	714.25	712.50	712.25	0.65	4.49	4.48	0.96	0.65	712.90	713.47	713.22	713.72	4
L60	L15	76.08	79.92	0.012	0.50	1	n/a	2	0.0051	714.63	714.25	712.63	712.25	0.73	4.79	4.77	1.11	0.74	712.99	713.74	713.34	714.01	5
L43	L45	247.39	251.39	0.013	0.34	1	n/a	3.5	0.0034	712.44	711.59	708.94	708.09	3.08	6.91	8.55	2.99	2.47	710.56	711.93	709.38	712.74	62
L35	L25	23.87	27.87	0.012	0.52	1	n/a	2	0.0052	714.94	714.82	712.94	712.82	0.73	4.86	1.95	1.50	1.52	714.34	714.44	714.81	714.51	5
L40	L25	70.49	74.33	0.012	0.50	1	n/a	2	0.0051	715.17	714.82	713.17	712.82	0.73	4.79	1.95	1.28	1.52	714.34	714.45	714.81	714.56	5
L55	L43	222.07	226.07	0.012	0.44	1	n/a	3.5	0.0043	715.60	714.63	712.10	711.13	2.52	8.38	8.55	3.50	2.47	713.60	715.87	712.74	716.96	62
L30	L35	56.46	69.29	0.012	0.50	1	n/a	2	0.0051	715.25	714.97	713.25	712.97	0.73	4.79	2.02	1.29	1.47	714.44	714.54	714.51	715.78	5
L90	L55	21.63	31.10	0.012	0.50	1	n/a	3	0.0050	717.70	717.59	714.70	714.59	2.64	8.20	8.95	2.68	2.39	716.98	717.38	716.96	718.51	54
L120	L55	47.57	57.05	0.012	0.50	1	n/a	2	0.0050	717.70	717.46	715.70	715.46	0.65	4.49	4.48	0.96	0.65	716.12	716.66	716.43	716.92	4
L240	L90	16.37	26.85	0.012	0.50	1	n/a	3	0.0049	717.81	717.73	714.81	714.73	2.42	8.18	7.56	3.00	2.65	717.38	718.64	718.51	719.55	50
L190	L240	116.47	119.47	0.012	0.50	1	n/a	3	0.0049	727.03	726.45	724.03	723.45	2.42	8.18	8.59	3.00	2.30	725.75	728.03	719.55	728.55	50
L10*	L*	36.15	36.15	0.013	0.33	1	7	4	0.0034	735.12	735.00	731.12	731.00	2.17	8.11	8.27	2.61	2.13	733.13	733.73	734.20	734.76	123
L15*	L10*	241.88	241.88	0.013	0.30	1	7	4	0.0029	735.84	735.12	731.84	731.12	2.29	7.68	6.73	2.40	2.61	733.73	734.24	734.76	735.15	123
L160	L15*	6.25	11.09	0.012	0.50	1	6	4	0.0050	740.81	740.78	736.81	736.78	0.14	2.33	2.33	0.57	0.14	736.93	737.39	737.01	737.39	2
L20*	L15*	49.41	49.41	0.013	0.28	1	7	4	0.0028	735.98	735.84	731.98	731.84	2.29	7.55	7.20	2.96	2.40	734.24	734.94	735.15	735.78	121
L21*	L20*	47.34	47.34	0.012	0.27	1	6	4	0.0027	736.11	735.98	732.11	731.98	2.54	7.95	6.81	3.10	2.96	734.94	735.21	735.78	735.97	121
L180	L21*	32.59	51.76	0.012	0.50	1	6	4	0.0050	731.24	731.08	727.24	727.08	0.25	3.32	0.21	4.00	4.00	735.21	735.21	735.97	735.21	5
L22*	L21*	77.11	77.11	0.012	0.30	1	6	4	0.0031	736.34	736.11	732.34	732.11	2.35	8.22	6.24	3.24	3.10	735.21	735.58	735.97	736.27	116
L170	L22*	25.47	55.80	0.013	0.50	1	n/a	2.5	0.0050	736.09	735.97	733.59	733.47	1.52	6.39	4.51	2.39	2.12	735.58	735.98	736.27	736.37	20
L30*	L22*	11.74	11.74	0.012	0.51	1	6	4	0.0052	736.40	736.34	732.40	732.34	1.70	9.40	4.94	3.69	3.24	735.58	736.09	736.27	736.48	96
L150	L30*	35.61	37.44	0.012	0.50	1	6	4	0.0050	741.66	741.48	737.66	737.48	0.18	2.72	2.72	0.61	0.18	737.67	738.27	737.78	738.27	3
L110	L30*	116.89	119.89	0.012	0.25	1	6	4	0.0025	741.77	741.48	737.77	737.48	2.17	7.16	7.93	3.22	1.95	739.44	740.99	736.48	741.81	93
L230	L110	55.89	58.97	0.012	0.33	1	6	4	0.0034	741.96	741.77	737.96	737.77	1.92	7.99	4.76	3.52	3.22	740.99	741.48	741.81	741.88	92
L210	L230	212.43	248.70	0.012	0.30	1	n/a	3	0.0031	741.64	741.00	738.64	738.00	1.63	5.87	3.25	3.00	3.00	741.48	742.01	741.88	742.18	23
L130	L210	24.90	32.11	0.012	0.30	1	n/a	3	0.0030	741.76	741.69	738.76	738.69	0.56	3.28	0.42	3.00	3.00	742.01	742.02	742.18	742.02	3
SYSTEM M/N																							
N25	N	641.49	643.99	0.012	0.49	1	n/a	4	0.0048	706.53	703.41	702.53	699.41	3.40	9.74	8.83	4.00	4.00	703.41	707.94	704.62	709.15	111
N40	N25	53.08	57.42	0.012	0.50	1	n/a	2	0.0051	704.84	704.57	702.84	702.57	1.09	5.74	3.18	2.00	2.00	707.94	708.19	709.15	708.35	10
N26	N25	106.00	111.00	0.012	0.92	1	n/a	3	0.0093	709.85	708.87	706.85	705.87	1.61	10.12	9.81	2.09	1.65	707.52	708.94	709.01	709.85	39
N27	N26	196.77	201.77	0.012	1.02	1	n/a	3	0.0101	715.89	713.89	712.89	710.89	1.54	10.40	10.30	2.07	1.55	712.44	714.96	714.09	715.85	38
N28	N27	178.23	183.23	0.012	1.02	1	n/a	3	0.0102	722.73	720.91	719.73	717.91	1.51	10.36	10.21	2.04	1.53	719.44	721.77	721.06	722.64	37
N30	N25	20.08	24.42	0.012	0.50	1	n/a	3	0.0062	705.67	705.57	702.67	702.57	3.00	8.85	8.63	3.00	3.00	707.94	708.19	709.15	709.35	61
N35	N28	154.42	158.92	0.012	1.30	1	n/a	3	0.0130	729.77	727.77	726.77	724.77	1.39	11.28	10.94	2.22	1.42	726.19	728.99	728.05	729.84	36
M20	M30	32.42	36.08	0.012	1.23	1	n/a	2.5	0.0123	708.70	708.30	706.20	705.80	1.44	10.60	6.32	2.50	2.50	709.66	710.45	710.18	711.07	31
M30	M35	62.57	66.91	0.012	0.48	1	n/a	3	0.0048	708.70	708.40	705.70	705.40	2.07	7.89	5.80	3.00	3.00	709.41	709.66	710.22	710.18	41
M35	N30	23.08	27.42	0.012	1.30	1	n/a	3	0.0131	708.20	707.90	705.20	704.90	1.71	12.30	7.22	3.00	3.00	708.19	709.41	709.35	710.22	51
N45	N35	154.91	158.91	0.012	1.19	1	n/a	2	0.0119	733.88	732.03	731.88	730.03	1.48	9.62	9.61	2.00	1.48	731.51	734.63	732.95	735.70	24
M40	N45	104.99	108.24	0.012	0.50	1	n/a	2	0.0049	736.53	736.00	734.53	734.00	1.23	5.91	5.91	1.92	1.23	735.23	736.44	735.77	736.83	12
N50	N35	21.58	25.42	0.012	0.50	1	n/a	2	0.0050	736.11	736.00	734.11	734.00	1.16	5.83	5.83	1.81	1.16	735.16	735.92	735.69	736.29	11
N55	N45	286.38	290.38	0.012	1.00	1	n/a	2	0.0100	739.74	736.88	737.74	734.88	0.94	7.60	7.59	1.86	0.94	735.82	739.60	736.72	740.09	11
M50	N55	104.62	107.87	0.012	0.50	1	n/a	2	0.0051	740.52	740.00	738.52	738.00	1.09	5.74	5.73	1.71	1.09	739.09	740.23	739.60	740.58	10

THIS DOCUMENT IS RELEASED FOR THE PURPOSE OF PRELIMINARY REVIEW UNDER THE AUTHORITY OF ERNEST T. MAESTAS, P.E. 52938 ON 8/23/2012 . IT IS NOT TO BE USED FOR CONSTRUCTION OR BIDDING PURPOSES.

MAESTAS & ASSOCIATES INC.
TBPE REGISTRATION No.: F-333
11550 I.H. 10 WEST
SUITE 320
SAN ANTONIO, TEXAS 78230
(210) 366-1988

CITY OF SAN ANTONIO

CAPITAL IMPROVEMENTS MANAGEMENT SERVICES DEPARTMENT

HARRY WURZBACH TAPS MEMORIAL BLVD.

APPENDIX E

HYDRAULIC CONVEYANCE SHEET

SHEET 3 OF 4

PER % SUBMITTAL	PROJECT NO.:		DATE: 8/23/2012
DRWN. BY: CS & KG	DSGN. BY: MJM & JPS	CHKD. BY: ETM	SHEET NO.: OF

GEOPAK HYDRAULIC CONVEYANCE

U.S. Node	D.S. Node	Actual Length	Hyd. Length	N Value	Slope	No. Barrels	Span	Rise	Fs	Soffit U.S.	Soffit D.S.	Invert U.S.	Invert D.S.	Unif. Depth	Unif. Vel.	Act. Vel. D.S.	Act. Depth U.S.	Act. Depth D.S.	HGL U.S.	HGL D.S.	EGL U.S.	EGL D.S.	Q
SYSTEM Q																							
Q35	Q*	459.51	462.51	0.013	0.37	1	10	4	0.0037	705.00	703.30	701.00	699.30	2.13	9.04	4.83	3.64	4.00	703.50	704.64	703.86	705.64	193
Q22	Q35	46.77	51.02	0.013	0.86	1	10	4	0.0085	705.80	705.40	701.80	701.40	1.53	11.69	5.52	3.61	3.24	704.64	705.41	705.64	706.13	179
Q25	Q35	149.53	155.53	0.012	0.60	1	n/a	2	0.0060	704.56	703.67	702.56	701.67	1.22	6.49	4.14	2.00	2.00	704.64	705.36	705.64	705.63	13
Q24	Q22	83.13	83.13	0.012	0.50	1	n/a	2	0.0049	705.07	704.65	703.07	702.65	1.53	6.22	5.09	2.00	2.00	705.41	706.17	706.13	706.57	16
Q50	Q25	22.30	29.43	0.012	0.50	1	n/a	2	0.0050	704.70	704.59	702.70	702.59	0.81	5.00	1.91	2.00	2.00	705.36	705.44	705.63	705.49	6
Q60	Q25	54.37	61.49	0.012	0.50	1	n/a	2	0.0050	704.86	704.59	702.86	702.59	0.81	5.00	1.91	2.00	2.00	705.36	705.46	705.63	705.51	6
Q1	Q	96.23	98.73	0.012	0.56	1	n/a	3	0.0056	701.54	701.00	698.54	698.00	1.36	7.36	3.25	3.00	3.00	701.00	701.81	701.16	702.01	23
Q2	Q1	17.75	21.50	0.012	1.69	1	n/a	2	0.0169	700.90	700.60	698.90	698.60	0.24	4.60	0.32	2.00	2.00	701.81	701.81	702.01	701.81	1
Q5	Q1	129.02	133.52	0.012	0.47	1	n/a	3	0.0046	702.18	701.57	699.18	698.57	1.41	6.75	3.11	3.00	3.00	701.81	702.88	702.01	703.05	22
Q10	Q5	32.58	42.06	0.012	0.50	1	n/a	2	0.0051	700.37	700.21	698.37	698.21	0.73	4.79	1.59	2.00	2.00	702.88	702.94	703.05	702.98	5
Q20	Q5	42.63	52.10	0.012	0.50	1	n/a	2	0.0050	701.42	701.21	699.42	699.21	0.65	4.49	1.27	2.00	2.00	702.88	702.92	703.05	702.95	4
Q15	Q5	307.95	311.20	0.012	0.50	1	n/a	2.5	0.0050	703.25	701.71	700.75	699.21	1.12	6.12	2.65	2.50	2.50	702.88	703.84	703.05	703.95	13
Q30	Q15	36.58	41.42	0.012	0.50	1	n/a	2	0.0050	700.97	700.79	698.97	698.79	0.81	5.00	1.91	2.00	2.00	703.84	703.92	703.95	703.97	6
Q40	Q15	36.58	41.42	0.012	0.50	1	n/a	2	0.0050	700.93	700.75	698.93	698.75	0.81	5.00	1.91	2.00	2.00	703.84	703.92	703.95	703.97	6
SYSTEM R																							
R5	R	455.52	458.02	0.012	0.50	1	n/a	3	0.0050	703.29	701.00	700.29	698.00	1.98	7.98	5.59	3.00	3.00	702.79	705.09	703.28	705.57	40
R10	R5	21.08	31.06	0.012	0.50	1	n/a	2	0.0050	702.43	702.32	700.43	700.32	0.76	4.83	1.67	2.00	2.00	705.09	705.15	705.57	705.19	5
R15	R5	308.52	313.52	0.012	0.51	1	n/a	3	0.0051	704.88	703.32	701.88	700.32	1.61	7.53	4.10	3.00	3.00	705.09	705.92	705.57	706.18	29
R18	R15	7.65	13.15	0.012	6.54	1	n/a	2	0.0654	704.50	704.00	702.50	702.00	0.13	5.98	0.16	2.00	2.00	705.92	705.92	706.18	705.92	1
R20	R5	47.08	57.06	0.012	0.50	1	n/a	2	0.0050	702.56	702.32	700.56	700.32	0.76	4.83	1.67	2.00	2.00	705.09	705.16	705.57	705.20	5
R25	R15	377.60	382.60	0.012	0.51	1	n/a	3	0.0050	706.82	704.91	703.82	701.91	1.58	7.40	3.96	3.00	3.00	705.92	707.29	706.18	707.58	28
R30	R25	26.08	30.42	0.012	0.50	1	n/a	2	0.0049	705.98	705.85	703.98	703.85	0.56	4.12	0.95	2.00	2.00	707.29	707.31	707.58	707.32	3
R34	R55	232.04	236.54	0.012	0.50	1	n/a	3	0.0051	708.83	707.67	705.83	704.67	1.30	6.83	2.93	3.00	2.77	707.44	709.69	707.58	710.18	20
R35	R34	165.54	169.54	0.012	0.50	1	n/a	2	0.0050	709.68	708.86	707.68	706.86	1.61	6.26	5.41	2.00	2.00	709.69	711.31	710.18	711.77	17
R36	R55	19.17	22.92	0.012	0.50	1	n/a	2	0.0050	706.80	706.70	704.80	704.70	0.23	2.45	0.16	2.00	2.00	707.44	707.44	707.58	707.44	1
R40	R25	47.08	51.42	0.012	0.50	1	n/a	2	0.0050	704.09	703.85	702.09	701.85	0.65	4.49	1.27	2.00	2.00	707.29	707.33	707.58	707.35	4
R45	R35	311.07	315.07	0.012	0.52	1	n/a	2	0.0051	711.29	709.68	709.29	707.68	0.77	4.93	1.75	2.00	2.00	711.31	711.54	711.77	711.58	6
R50	R34	21.58	25.42	0.012	0.50	1	n/a	2	0.0049	707.97	707.86	705.97	705.86	0.56	4.12	0.95	2.00	2.00	709.69	709.71	710.18	709.72	3
R55	R25	155.09	160.09	0.013	0.50	1	n/a	3	0.0050	707.63	706.85	704.63	703.85	1.39	6.42	2.90	2.81	3.00	707.29	707.44	707.58	707.58	21
R60	R35	47.59	57.07	0.012	0.50	1	n/a	2	0.0050	709.99	709.75	707.99	707.75	0.76	4.83	1.67	2.00	2.00	711.31	711.38	711.77	711.43	5
R70	R35	25.59	35.06	0.012	0.50	1	n/a	2	0.0050	709.88	709.75	707.88	707.75	0.83	5.08	1.99	2.00	2.00	711.31	711.40	711.77	711.46	6
R90	R45	21.57	31.05	0.012	0.50	1	n/a	2	0.0049	711.51	711.40	709.51	709.40	0.78	4.87	1.75	2.00	2.00	711.54	711.60	711.58	711.65	6
SYSTEM S																							
S5	S	18.19	18.19	0.035	0.55	1	15	3	0.0056	701.20	701.10	698.20	698.10	1.88	4.03	2.17	3.00	3.00	702.79	702.99	702.86	703.07	156
S6	S5	23.74	23.74	0.035	0.34	1	9	3	0.0034	701.65	701.30	698.65	698.30	1.64	2.76	1.17	3.00	3.00	702.99	703.12	703.07	703.14	63
S30	S5	384.73	384.73	0.035	1.23	1	9	2.5	0.0123	705.53	700.80	703.03	698.30	1.19	4.41	1.60	1.23	2.50	702.99	704.26	703.07	704.56	66
S10	S6	99.23	101.06	0.012	0.76	1	n/a	4	0.0075	702.81	702.65	698.81	698.65	1.92	10.55	5.01	4.00	4.00	703.12	703.69	703.14	704.08	63
S20	S10	47.03	50.70	0.012	0.46	1	n/a	4	0.0046	703.06	702.84	699.06	698.84	1.94	8.30	3.98	4.00	4.00	703.69	703.76	704.08	704.00	50
P20	S20	158.13	161.42	0.012	0.52	1	n/a	3	0.0052	702.91	702.08	699.91	699.08	1.40	7.13	3.25	3.00	3.00	703.76	704.09	704.00	704.25	23
S40	S30	867.97	867.97	0.035	0.87	1	6	2.5	0.0088	713.10	705.53	710.60	703.03	1.25	3.63	3.70	1.33	1.23	704.26	711.93	704.56	713.38	44
S50	S40	25.19	25.19	0.035	3.18	1	5	2.5	0.0318	713.90	713.10	711.40	710.60	0.45	3.86	3.86	0.68	0.45	711.05	712.08	711.28	712.27	11

THIS DOCUMENT IS RELEASED FOR THE PURPOSE OF PRELIMINARY REVIEW UNDER THE AUTHORITY OF ERNEST T. MAESTAS, P.E. 52938 ON 8/23/2012 . IT IS NOT TO BE USED FOR CONSTRUCTION OR BIDDING PURPOSES.

MAESTAS & ASSOCIATES INC.
TBPE REGISTRATION No. : F-333
11550 I.H. 10 WEST
SUITE 320
SAN ANTONIO, TEXAS 78230
(210) 366-1988

CITY OF SAN ANTONIO

CAPITAL IMPROVEMENTS MANAGEMENT SERVICES DEPARTMENT

HARRY WURZBACH TAPS MEMORIAL BLVD.

APPENDIX E

HYDRAULIC CONVEYANCE SHEET

SHEET 4 OF 4

PER % SUBMITTAL	PROJECT NO.:_____		DATE: 8/23/2012
DRWN. BY: CG & KG	DSGN. BY: MJM & JPS	CHKD. BY: ETM	SHEET NO.: __OF__

APPENDIX F

CROSS DRAINAGE CALCULATIONS

Culvert Analysis Report
Culvert No. 1 - Station 25+32.70

Component:Culvert-1

Culvert Summary			
Computed Headwater Elevation	724.33 ft	Discharge	483.00 cfs
Inlet Control HW Elev.	724.33 ft	Tailwater Elevation	718.00 ft
Outlet Control HW Elev.	724.07 ft	Control Type	Inlet Control
Headwater Depth/Height	1.50		

Grades			
Upstream Invert	716.85 ft	Downstream Invert	716.50 ft
Length	116.00 ft	Constructed Slope	0.003000 ft/ft

Hydraulic Profile			
Profile	M2	Depth, Downstream	4.17 ft
Slope Type	Mild	Normal Depth	N/A ft
Flow Regime	Subcritical	Critical Depth	4.17 ft
Velocity Downstream	11.58 ft/s	Critical Slope	0.003435 ft/ft

Section			
Section Shape	Box	Mannings Coefficient	0.013
Section Material	Concrete	Span	10.00 ft
Section Size	10 x 5 ft	Rise	5.00 ft
Number Sections	1		

Outlet Control Properties			
Outlet Control HW Elev.	724.07 ft	Upstream Velocity Head	1.90 ft
Ke	0.50	Entrance Loss	0.95 ft

Inlet Control Properties			
Inlet Control HW Elev.	724.33 ft	Flow Control	N/A
Inlet Type	3/4 inch chamfers; 30° skewed headwall	Area Full	50.0 ft²
K	0.53300	HDS 5 Chart	11
M	0.66700	HDS 5 Scale	2
C	0.04250	Equation Form	2
Y	0.70500		

Culvert Analysis Report
Culvert No. 2 - Station 47+55.88

Component:Culvert-1

Culvert Summary			
Computed Headwater Elevation	703.59 ft	Discharge	290.00 cfs
Inlet Control HW Elev.	703.51 ft	Tailwater Elevation	701.00 ft
Outlet Control HW Elev.	703.59 ft	Control Type	Outlet Control
Headwater Depth/Height	1.02		

Grades			
Upstream Invert	698.50 ft	Downstream Invert	698.20 ft
Length	89.40 ft	Constructed Slope	0.003356 ft/ft

Hydraulic Profile			
Profile	M2	Depth, Downstream	3.18 ft
Slope Type	Mild	Normal Depth	3.20 ft
Flow Regime	Subcritical	Critical Depth	3.18 ft
Velocity Downstream	10.12 ft/s	Critical Slope	0.003416 ft/ft

Section			
Section Shape	Box	Mannings Coefficient	0.013
Section Material	Concrete	Span	9.00 ft
Section Size	9 x 5 ft	Rise	5.00 ft
Number Sections	1		

Outlet Control Properties			
Outlet Control HW Elev.	703.59 ft	Upstream Velocity Head	1.57 ft
Ke	0.20	Entrance Loss	0.31 ft

Inlet Control Properties			
Inlet Control HW Elev.	703.51 ft	Flow Control	N/A
Inlet Type	90° headwall w 45° bevels	Area Full	45.0 ft²
K	0.49500	HDS 5 Chart	10
M	0.66700	HDS 5 Scale	2
C	0.03140	Equation Form	2
Y	0.82000		

© Bentley Systems, Inc. Haestad Methods Solution Center Watertown, CT 06795 USA +1-203-755-1666
Maestas & Bailey

Culvert Analysis Report
Culvert No. 3 - Station 32+42 R2

Component:Culvert-1

Culvert Summary					
Computed Headwater Elevation	690.23	ft	Discharge	1,495.00	cfs
Inlet Control HW Elev.	690.23	ft	Tailwater Elevation	687.56	ft
Outlet Control HW Elev.	689.77	ft	Control Type	Inlet Control	
Headwater Depth/Height	1.53				

Grades					
Upstream Invert	682.56	ft	Downstream Invert	682.39	ft
Length	93.40	ft	Constructed Slope	0.001839	ft/ft

Hydraulic Profile					
Profile	PressureProfile		Depth, Downstream	5.17	ft
Slope Type	N/A		Normal Depth	N/A	ft
Flow Regime	N/A		Critical Depth	4.26	ft
Velocity Downstream	9.97	ft/s	Critical Slope	0.003455	ft/ft

Section					
Section Shape	Box		Mannings Coefficient	0.013	
Section Material	Concrete		Span	10.00	ft
Section Size	10 x 5 ft		Rise	5.00	ft
Number Sections	3				

Outlet Control Properties					
Outlet Control HW Elev.	689.77	ft	Upstream Velocity Head	1.54	ft
Ke	0.20		Entrance Loss	0.31	ft

Inlet Control Properties					
Inlet Control HW Elev.	690.23	ft	Flow Control	N/A	
Inlet Type	90° headwall w 3/4 inch chamfers		Area Full	150.0	ft^2
K	0.51500		HDS 5 Chart	10	
M	0.66700		HDS 5 Scale	1	
C	0.03750		Equation Form	2	
Y	0.79000				

© Bentley Systems, Inc.
Maestas & Bailey
Haestad Methods Solution Center Watertown, CT 06795 USA +1-203-755-1666

Culvert Analysis Report
Culvert No. 4 - Station 40+75 R2

Component:Culvert-1

Culvert Summary					
Computed Headwater Elevation	692.94	ft	Discharge	4,200.00	cfs
Inlet Control HW Elev.	692.64	ft	Tailwater Elevation	691.40	ft
Outlet Control HW Elev.	692.94	ft	Control Type	Outlet Control	
Headwater Depth/Height	1.17				

Grades					
Upstream Invert	684.74	ft	Downstream Invert	684.46	ft
Length	93.40	ft	Constructed Slope	0.002989	ft/ft

Hydraulic Profile					
Profile	M1		Depth, Downstream	6.94	ft
Slope Type	Mild		Normal Depth	5.16	ft
Flow Regime	Subcritical		Critical Depth	4.82	ft
Velocity Downstream	8.65	ft/s	Critical Slope	0.003585	ft/ft

Section					
Section Shape	Box		Mannings Coefficient	0.013	
Section Material	Concrete		Span	10.00	ft
Section Size	10 x 7 ft		Rise	7.00	ft
Number Sections	7				

Outlet Control Properties					
Outlet Control HW Elev.	692.94	ft	Upstream Velocity Head	1.24	ft
Ke	0.20		Entrance Loss	0.25	ft

Inlet Control Properties					
Inlet Control HW Elev.	692.64	ft	Flow Control	N/A	
Inlet Type	90° headwall w 3/4 inch chamfers		Area Full	490.0	ft^2
K	0.51500		HDS 5 Chart	10	
M	0.66700		HDS 5 Scale	1	
C	0.03750		Equation Form	2	
Y	0.79000				

Culvert Analysis Report
Culvert No. 5 - Station 106+14.82 R2

Component:Culvert-1

Culvert Summary					
Computed Headwater Elevation	722.43	ft	Discharge	1,037.00	cfs
Inlet Control HW Elev.	722.43	ft	Tailwater Elevation	717.90	ft
Outlet Control HW Elev.	721.94	ft	Control Type	Inlet Control	
Headwater Depth/Height	1.33				

Grades					
Upstream Invert	715.76	ft	Downstream Invert	715.43	ft
Length	108.45	ft	Constructed Slope	0.003070	ft/ft

Hydraulic Profile					
Profile	M2		Depth, Downstream	3.87	ft
Slope Type	Mild		Normal Depth	N/A	ft
Flow Regime	Subcritical		Critical Depth	3.87	ft
Velocity Downstream	11.16	ft/s	Critical Slope	0.003868	ft/ft

Section					
Section Shape	Box		Mannings Coefficient	0.013	
Section Material	Concrete		Span	8.00	ft
Section Size	8 x 5 ft		Rise	5.00	ft
Number Sections	3				

Outlet Control Properties					
Outlet Control HW Elev.	721.94	ft	Upstream Velocity Head	1.67	ft
Ke	0.20		Entrance Loss	0.33	ft

Inlet Control Properties					
Inlet Control HW Elev.	722.43	ft	Flow Control	N/A	
Inlet Type	90° headwall w 3/4 inch chamfers		Area Full	120.0	ft^2
K	0.51500		HDS 5 Chart	10	
M	0.66700		HDS 5 Scale	1	
C	0.03750		Equation Form	2	
Y	0.79000				

Culvert Analysis Report
Culvert No. 6 - Station 152+73 R2

Component:Culvert-1

Culvert Summary					
Computed Headwater Elevation	706.40	ft	Discharge	2,568.00	cfs
Inlet Control HW Elev.	706.40	ft	Tailwater Elevation	702.42	ft
Outlet Control HW Elev.	706.21	ft	Control Type	Inlet Control	
Headwater Depth/Height	1.19				

Grades					
Upstream Invert	699.28	ft	Downstream Invert	699.00	ft
Length	94.92	ft	Constructed Slope	0.002970	ft/ft

Hydraulic Profile					
Profile	M2		Depth, Downstream	4.34	ft
Slope Type	Mild		Normal Depth	4.60	ft
Flow Regime	Subcritical		Critical Depth	4.34	ft
Velocity Downstream	11.82	ft/s	Critical Slope	0.003474	ft/ft

Section					
Section Shape	Box		Mannings Coefficient	0.013	
Section Material	Concrete		Span	10.00	ft
Section Size	10 x 6 ft		Rise	6.00	ft
Number Sections	5				

Outlet Control Properties					
Outlet Control HW Elev.	706.21	ft	Upstream Velocity Head	1.97	ft
Ke	0.20		Entrance Loss	0.39	ft

Inlet Control Properties					
Inlet Control HW Elev.	706.40	ft	Flow Control	N/A	
Inlet Type	90° headwall w 3/4 inch chamfers		Area Full	300.0	ft²
K	0.51500		HDS 5 Chart	10	
M	0.66700		HDS 5 Scale	1	
C	0.03750		Equation Form	2	
Y	0.79000				

© Bentley Systems, Inc.
Maestas & Bailey
Haestad Methods Solution Center Watertown, CT 06795 USA +1-203-755-1666

Culvert Analysis Report
Culvert No. 7 - Station 168+38.73 R2

Component:Culvert-1

Culvert Summary					
Computed Headwater Elevation	702.38	ft	Discharge	239.00	cfs
Inlet Control HW Elev.	702.38	ft	Tailwater Elevation	700.00	ft
Outlet Control HW Elev.	702.31	ft	Control Type	Inlet Control	
Headwater Depth/Height	0.71				

Grades					
Upstream Invert	698.10	ft	Downstream Invert	698.00	ft
Length	96.40	ft	Constructed Slope	0.001070	ft/ft

Hydraulic Profile					
Profile	M2		Depth, Downstream	2.61	ft
Slope Type	Mild		Normal Depth	3.82	ft
Flow Regime	Subcritical		Critical Depth	2.61	ft
Velocity Downstream	9.16	ft/s	Critical Slope	0.003131	ft/ft

Section					
Section Shape	Box		Mannings Coefficient	0.013	
Section Material	Concrete		Span	10.00	ft
Section Size	10 x 6 ft		Rise	6.00	ft
Number Sections	1				

Outlet Control Properties					
Outlet Control HW Elev.	702.31	ft	Upstream Velocity Head	0.92	ft
Ke	0.20		Entrance Loss	0.18	ft

Inlet Control Properties					
Inlet Control HW Elev.	702.38	ft	Flow Control	N/A	
Inlet Type	90° headwall w 3/4 inch chamfers		Area Full	60.0	ft^2
K	0.51500		HDS 5 Chart	10	
M	0.66700		HDS 5 Scale	1	
C	0.03750		Equation Form	2	
Y	0.79000				

APPENDIX E

Traffic Analysis Report