Exhibit E

SAN ANTONIO INTERNATIONAL AIRPORT CONCESSION STANDARD SPECIFICATIONS FOR CONSTRUCTION

San Antonio International Airport Concessions Standard Specifications for Construction

Table of Contents

I. Concession Design Criteria Manual

II. Concession Construction Manual

III. Concession Signage Manual (included in Design Criteria Manual)

IV. Cabling Infrastructure Guidelines

Frank R. Miller, Airport Director
City of San Antonio, Aviation Department
9800 Airport Blvd
San Antonio, Texas 78216

I. San Antonio International Airport Concessions Design Criteria Manual

Design Criteria Manual

Table of Contents

Definitions	**Page 3**
Introduction	**Page 3**
General Requirements for all Submissions	**Page 5**
Concession Design Elements	**Page 5**
Conceptual Plans Submission	**Page 5**
Final Drawing Submission	**Page 7**
Changes After Final Drawing Approval	**Page 10**
Physical On-Site Inspection	**Page 10**
Aviation Department Drawing Review and Approval	**Page 10**
Drawings Submittal Address	**Page 10**
Construction Requirements and Project Close-Out	**Page 11**
Tenant IT Cable Policy	**Page 12**
Security and Special Airport Conditions	**Page 16**
Site Access Badging Procedure	**Page 16**
Escorts across Airfield Operations Area	**Page 17**
Temporary Construction Barricade Design	**Page 18**

Definitions:

1. "Concessionaire" (also referred to as "Tenant") shall mean a person, group, or company to whom a concession space has been leased (under contract), to operate a subsidiary business or service.

2. "Concessionaire's Work" shall mean Concessionaire's total responsibility (or any portion thereof) for the construction and improvement of the Premises. Concessionaire's Work shall be performed at Concessionaire's sole cost and expense. Concessionaire's Work shall include, but not be limited to, all work necessary or required to complete the Premises.

3. "Concession Agreement" (also referred to as "Agreement") – shall mean the lease and concession agreements between the City of San Antonio and each concession tenant leasing space and operating a concession in Terminal A at the San Antonio International Airport (SAT).

4. "Concession Management" shall mean the San Antonio International Airport (SAT) staff or SAT contractor assigned to oversee the concession program for the Aviation Department.

5. "Construction Manual" shall mean the manual developed for Concessionaires, their Consultants and Contractors, intending to construct improvements, alterations, and/or new facilities at SAT. It is the intent of the Construction Manual to assist applicants so Concessionaire Permit Application (CPA) submissions can be complete; time frames for review can be more predictable; and construction and closeout requirements can be understood. The procedures outlined and referenced in the Construction Manual are applicable to all types of construction, alterations, equipment additions/replacements, and maintenance work performed by a Concessionaire within their leasehold.

Introduction:

This manual is to provide guidelines for the design and construction of concessions at the San Antonio International Airport Terminal A. The terminal will be going through a renovation and these concessions will enhance a new image for the facility.

It is the responsibility of the concessionaire to field verify as-built conditions of each lease space.

1. Concessionaire's Work shall be subject to the Aviation Department's and the Development Services Department's prior approval, such approval to be determined in their sole discretion, and shall be designed, fabricated, constructed, and installed to comply with all of the requirements set forth in the Aviation Department's Design Criteria Manual and with all of the requirements set forth in the most current edition of local codes and other various documents and

2. The Terminal A Design Criteria Manual, the Construction Manual, current local codes, the Agreement, and its process requirements may, when the context requires, hereinafter be collectively referred to as "Concessionaire's Requirements".

3. The design, fabrication, construction, and installation of Concessionaire's Work must comply with each of the following requirements:

    a. This Terminal Design Criteria Manual
    b. The Construction Manual (to include specifications and procedures)
    c. Current local codes
    d. Concessionaire's Final Drawings, as approved by the Aviation Department
    e. All applicable laws, ordinances, codes, regulations, and the requirements of all federal, state, and/or local permitting, building, and inspection agencies.
    f. All applicable standards of the American Insurance Association, the American Society of Heating, Refrigeration, and Air Conditioning, Engineer's Guide (latest edition) the City's Insurance Carriers, the local building codes and regulations and all other agencies having jurisdiction.
    g. All provisions for access to the construction site as determined by Aviation Department.
    h. All safety measures, including, but not limited to, safety training classes as required by the Aviation Department, Concession Management, and the Transportation Security Administration. (TSA)
    i. Concessionaire will be required to comply with standard finishes established by the Aviation Department.

    In the event of a conflict between any of the aforementioned items, the most stringent requirement shall govern each increment of Concessionaire's Work.

4. All aspects of Concessionaire's Work shall be performed in a professional, first- class and workmanlike manner and shall be in a good, first-class and usable condition as of the date of completion and maintained in such condition at all times. All materials used in Concessionaire's Work, Concessionaire's construction of the Premises, and installations made as a part of Concessionaire's Work shall be of new, commercial grade, and first-class quality.

5. After Concessionaire's initial construction of the Premises, any and all elective remodeling and alterations required of Concessionaire by the Aviation Department under the applicable provisions of the Agreement shall be performed.

6. Concessionaire shall be solely responsible for the investment required for the planning, design, development, construction, fabrication, and installation of all Fixed Improvements and Operating Equipment necessary to complete the premises as required to provide the concession services as permitted in the Concession Agreement. The Concessionaire is responsible for all demolition and preparation of the lease space for new construction. Such investment shall be subject to the detailed review and approval by the Aviation Department as provided elsewhere in the Concession Agreement and in the Concessionaire's Construction Requirements.

General Requirements for all Submissions:

1. Within five (5) calendar days after the effective date of the Concession Agreement and lease date, Concessionaire shall notify Concession Management of the identity of the licensed architect engaged by Concessionaire for the preparation of the drawings for Concessionaire Work.

2. Concessionaire and/or Concessionaire's architect shall immediately engage mechanical, electrical, plumbing, and fire protection system engineers and notify Concession Management of such, in writing, as soon as possible thereafter.

3. All architects and engineers, obtained in accordance with the above 2 paragraphs, must be licensed in the state of Texas, as required.

4. Concessionaire's architect and engineers shall submit all drawing documentation, in hard copy and electronic versions (AutoCAD and PDF), to Concession Management Office. Concession Management shall distribute drawings for review and reply via email, fax, or mail to Concessionaire with comments and any applicable illustrations to further convey comments.

5. The Aviation Department will review the drawings at 30%, 60% and 100% for general compliance with all applicable Design criteria for the Airport facilities.

Concession Design Elements

The designers of the concessions are encouraged to design visually stimulating spaces that incorporate complimentary building finishes. The Terminal A concession spaces are located both pre- and post-security checkpoint and the design elements consist of the following:

1. Mainly open store fronts with rolling overhead grilles by concessionaire;
2. Blade sign (by tenant to Aviation standards);
3. Signage (by tenant); mounting, size and material as approved by the Aviation Department;
4. Ceilings;
5. Remainder of furr down; and
6. Existing finish out to extend to lease line only, all surfaces within lease line to be finished by tenant including, but not limited to a pier, flooring, walls and ceiling. All millwork used within lease spaces must be durable and high-design quality.

Conceptual Plans Submission:

1. Concessionaire shall prepare five (5) 24"x36" sets of conceptual plans for the Premises in accordance with the provisions of the Design Criteria Manual and current local codes and submit them to the Concession Management Office for Aviation Department approval, such approval to be determined in its sole discretion. The Conceptual Plans must be submitted to the Concession Management Office no later than thirty (30) calendar days from the effective date of the Concession Agreement and lease date or such shorter period of time as may be required for Concessionaire to open for business as per contract, and shall include at a minimum the following (as applicable to work scope):

a. Cover Page - To include code information, contact information for complete design team, location/site maps, Table of Contents, address, etc.

b. Demolition Plan - To include items proposed to be removed.

c. Floor Plan - To include overall dimensions, interior finishes, construction components, and location of construction barricades.

d. Elevations - To include all interior and storefront elevations of the Premises visible to the public, storefront details illustrating architectural compatibility with surrounding areas.

e. Material Boards - To include material boards referenced to floor plans and elevations for the Premises illustrating floor, base, wall, millwork, door, trim, ceiling materials, and color selections. Material boards shall include color photos and catalog cuts of furniture and/or fixtures where required; one (1) board for colors and materials for all storefront and interior components. One

(1) color rendering of Concessionaire's proposed storefront design.

f. Reflected Ceiling Plan - To include locations of all lighting fixtures.

g. Signage Drawings - To include the shape, size, color, and location of signs (including Blade Sign), and a description of all materials, methods of fabrication, installation, and construction.

h. Mechanical, Electrical, Engineering, & Plumbing - To include connections to base building systems and locations of piping, ductwork, equipment, materials, catalog cuts, and/or details for the make, model, and capacity of all new equipment including location and electrical requirements, location of return air systems, incorporation of all applicable design criteria, floor plan and riser diagram for all new plumbing fixtures, show interface with base building smoke control system and building automation system. Floor plans showing outlets, other electrical equipment, location of panel board and switchboards, projected electrical loads, and incorporation of applicable design criteria contained in the electrical requirements. Shall also include special systems, such as telephone and data transmission line systems, fire alarm system, airport access control system (if applicable), paging system (if applicable), cable access television system (if applicable), and master clock system (if applicable).

2. The Aviation Department shall have the right to require modifications to the Conceptual Plans and any approval granted by the Aviation Department is subject to the Concessionaire's incorporation of the required modifications and draft set of Concessionaire specifications to ensure compliance with the Design Criteria Manual and the current local codes. In the event the Aviation Department requires any such modifications to the Conceptual Plans, Concessionaire shall prepare and submit the same for the Aviation Department 's review and approval within five (5) calendar days after receipt of the Aviation Department's modifications.

Final Drawing Submission:

1. Concessionaire shall prepare and submit five (5) 24" x 36" sets of final construction drawings and specifications ("Final Drawings") which are based on the Aviation Department's approved Conceptual Plans for the Premises as described herein within six (6) weeks from receipt of the approved Conceptual Plans, or earlier as may be required, to open the Premises for business no later than the Latest Rental Commencement Date specified in the Concession Agreement. The Final Drawings shall be prepared and all calculations must be signed and sealed by the registered architect and/or the registered engineer licensed in the State of Texas, at a minimum, to include the following:

   a. Drawings
      (i) Cover Page
      (ii) Demolition Plan
      (iii) Floor Plan
      (iv) Elevations
      (v) Sections
      (vi) Details
      (vii) Finish, hardware, door, room, fixture, storefront and window schedules
      (viii) Fixture Plans
      (ix) Reflected Ceiling Plan
      (x) Signage Drawings
      (xi) Temporary Construction Barricade
      (xii) Finish out of or Modifications to Storage Space

   b. Applicable Specifications

   c. Reflected Ceiling Plans - To include ceiling material, grid, soffits, drops, recesses, coves, etc., ceiling heights for each space, all light fixtures, type of ceiling system with fire rating, any items attached to or coming through the ceiling, if any, Reflected Ceiling Plan to be at 1/4"=1'-0" scale or larger. Also include details of rolling grille and/or security gate assembly.

   d. Structural Drawings - To include structural drawings and calculations of proposed structural elements. Base building structural components shall not be altered.

   e. Mechanical Drawings - To include load calculations submitted as required in the Design Criteria Manual and current local codes, gas lines, and proposed locations & connections of all equipment.

   f. Plumbing Drawings - If applicable, to include location and size of water and supply lines, drains, vents, grease traps and grease waste lines, and water and sanitary riser diagrams.

   g. Fire Protection & Monitoring Systems - To include fire suppression and monitoring systems, fire alarm, location of connection point to the base building systems, location of addressable smoke detectors, duct/smoke detectors, combination heat/smoke detectors, and addressable heat detectors as per the Design Criteria Manual, current local codes, and all other applicable codes and regulations. If base building systems are not available

or fully utilized or do not satisfy current local code requirements, Concessionaire shall provide make and model numbers and specifications of intended fire suppression and monitoring systems for approval by the Aviation Department. If base building system resources are not available or if such system resources are fully utilized or do not satisfy current local code requirements, the Concessionaire is required to contract with a private provider of fire alarm monitoring services, which will have the ability to monitor the Concessionaire's fire alarm system 24 hours per day, 365 days per year and provide immediate notification to the San Antonio Fire Department, the Airport communications center and any other individual or agency required by the Aviation Department from time to time.

h. Electrical Plans - To include power and lighting layout with circuits and home runs, electrical load requirements, on panel schedules, service riser diagrams, telephone conduits, and load calculations.

i. Special Systems - Such as telephone and data transmission line systems, airport access control system (if applicable), paging system (if applicable), cable access television system (if applicable), and master clock system (if applicable).

j. Locking System - Concessionaire shall install a lock keying system compatible with the City's system on all entrances to the premises and mechanical room entrances located therein for police, security, fire protection, and maintenance reasons.

2. Concessionaire shall submit to the Aviation Department as part of the Conceptual Plans and Final Drawings, drawings (in color) showing storefronts, window displays, signage, and any advertising structures, plus a lighting plan.

3. When Concessionaire submits any plans and specifications to the Aviation Department it shall include complete sets for each submittal as specified in the Design Criteria Manual and current local codes.

4. Concessionaire's Work shall include the procurement of all necessary building permits, licenses, variances, and additional utility services required to facilitate Concessionaire's construction and occupancy of the Premises, and the payment of any fees associated therewith as may be required by the Aviation Department, other public agencies, and utility companies. Within ten (10) calendar days after approval of the Final drawings or such shorter period of time as may be required for Concessionaire to open the Premises for business no later than the Latest Rental Commencement Date, Concessionaire shall make all necessary applications, provide all necessary information, pay all required fees and take all necessary actions to obtain such items and shall endeavor to use due diligence and its best efforts to procure the same as quickly as possible.

5. Concessionaire shall comply in all respects with the Concessionaire's Construction requirements including, but not limited to, applicable local/state health department requirements, U.S. Department of Labor, Construction Safety, Health Regulations, Part 1926, and the Terminal Construction Manual. Concessionaire shall comply and be liable for all costs associated with adherence to the Texas Accessibility Standards (TAS).

6. On all premises, the Concessionaire shall:

   a. obtain the Architect's/Engineer's Texas Seal on two (2) sets of final construction drawings or as may otherwise be specified by the current local code process submitted for a building permit,

   b. obtain from the Concessionaire's contractor(s) a written warranty of all materials and workmanship for a period of one (1) year effective from the date of beneficial occupancy of the premises. Concessionaire's contractor(s) shall be required by Concessionaire in its construction contract to repair and/or replace all defective materials, equipment and workmanship at no cost to the Aviation Department of the Concessionaire occupying the Premises,

   c. obtain all required manufacturers' guarantees, maintenance manuals and other pertinent documents, and (iv) furnish to the Aviation Department one (1) set of "as-built" drawings (and preferably specifications) and Computer Aided Drafting and Design (AutoCAD) drawings, duly certified by a Texas registered architect or registered engineer, no later than ninety
   (90) calendar days after opening for business in the Premises.

7. Concessionaire shall not be permitted to commence any work until all requirements of the Design Criteria Manual and current local codes have been completed.

8. Security clearance, safety training, and any other related requirements necessary must be completed as required by the Aviation Department, Concession Management, and TSA.

9. In its construction plans Concessionaire must ensure that the Premises have strong visual appeal and are inviting to the customers and that the Premises accommodate customers with luggage and meet all Americans with Disabilities Act (ADA), Texas Accessibility Standard (TAS), and all current local code requirements relating to ingress, egress, access, and other architectural matters, for example, large print price signs for the visually impaired and the ability to communicate with hearing impaired.

10. Plans to finish out or modify storage rooms included as part of concession leases must be submitted with all conceptual drawing and final drawing submissions.

11. When Aviation Department shall determine that the construction drawings and specifications conform to the Preliminary Plans and design/construction requirements, Aviation Department shall cause one (1) copy thereof to be electronically stamped and initialed on behalf of Aviation Department , thereby evidencing the approval thereof by Aviation Department and shall return such counterpart so initialed to Concessionaire or Concessionaire's Representative. The construction drawings and specifications or the revised final drawings and specifications shall become and are hereinafter referred to as the Final Construction Drawings.

Changes After Final Drawing Approval:

1. Final Drawings must also be submitted to the Concession Management Office, at the address below, for Aviation Department review and approval. Forward five (5) 24"x 36" complete sets (architectural, mechanical, electrical, plumbing, & fire suppression) to that office for review. Upon review and approval Aviation Department, the Concessionaire will be allowed to apply to the City of San Antonio for its building permit.

2. After the Aviation Department's approval of the Final Construction Drawings, no changes shall be made in the final construction drawings by the Concessionaire, except with prior approval of the Aviation Department. Aviation Department reserves the right to make changes in, on, or about the building as may be required. Concessionaire shall be notified of such changes and adjust the Final Construction Drawings to accommodate such changes.

Physical On-Site Inspection:

During all phases of drawing development and prior to bidding documents and/or commencing construction, Concessionaire shall make a physical on-site inspection of the Demised Premises or cause Concessionaire's architect and engineers to do so, to verify the as-built location, conditions, and physical dimensions of the Demised Premises and the conformance of the Final Working Drawings thereof. Failure to do so shall be at the risk and sole expense of Concessionaire. Concessionaire's architects or Concessionaire's engineers are required to contact Concession Management Office prior to visiting the site. Hard hats and proper footwear are required in the construction zones. All persons visiting the site must abide by the Aviation Department's and TSA's security guidelines.

Aviation Department Drawing Review and Approval:

No responsibility for proper engineering, safety, and design of facilities or compliance with all applicable governing codes and regulations is implied or inferred on the part of Aviation Department by drawing approval. Aviation Department's drawing review and approval is for compliance with Terminal A Design Criteria Manual and the Construction Manual only, and this approval does not relieve Concessionaire of responsibility for:

1. Compliance with Concession Agreement;
2. Field verification of dimensions and existing conditions;
3. Discrepancies between final drawings and as-built conditions of Concessionaire's space;
4. Coordination with other trades and job conditions; and
5. Compliance with all governing codes and regulations applicable to this work.

Drawings Submittal Address:

At the concessionaire's sole expense, all drawings, samples, and related documentation shall be submitted for review and approval to the Concession Management Office:

Concession Management Office San
Antonio International Airport 9800 Airport
Blvd., Suite 2091 San Antonio, Texas
78216

The Concession Management Office will then distribute drawings to the Aviation Department for review.

Construction Requirements and Project Close-Out

See Construction Manual for more specific information regarding items below.

1. Terminal A will soon be updating room numbers throughout. It will be required that the Concessionaire coordinate with Aviation Department staff during. Storefronts as well as any interior rooms will require proper signage that meets Aviation standards and A.D.A. requirements.

2. All areas of construction must have a barricade erected prior to the start of construction and the contractor shall use all means necessary to keep dust to a minimum by having dust control. Dust is a major element in construction that needs to be controlled at all times. See Temporary Construction Barricade Design Criteria specification drawing in this criteria manual.

3. Contractor shall be responsible for the repair and/or replacement of any damages caused by Concessionaire's contractor or his subcontractor to the Facility or surrounding tenants. All damage must be repaired within a twenty-four (24) hour time period, or Aviation will complete all necessary repairs at the sole cost and expense to the contractor, plus an administrative fee, as defined in the lease agreement.

4. Prior to opening concession, contractor shall deliver to Concession Manager a copy of the Certificate of Occupancy with respect to the premises.

5. X-ray or SRP of existing concrete structural members is required if any attachments or penetration is required. Any unused penetrations shall be filled and sealed with appropriate materials

6. Cutting and patching on roof must be performed by roofing contractor to ensure warranty, American Roofing is the Terminal A contact. Currently, roof penetrations are not allowed except for kitchen uses. At those times, all penetrations must be coordinated with Concession Manager. Only authorized contractors are allowed access to the roof and must be authorized by Concession Manager and only City's authorized roofer can be used; American Roofing – Terminal A. The Contractor is to contact Concession Manager for information.

7. Additional HVAC required per design to any unit must provide their own Split or package unit. Testing and Balancing report must be submitted upon completion of installation.
8. Commercial epoxy, or terrazzo flooring required for all wet areas (kitchen, bar and serving areas). Floor and base of wall to be applied monolithic to avoid seams where possible
9. Grease traps are required at every food and beverage unit with sinks

10. Cutting and patching on roof must be performed by roofing contractor to ensure warranty, American Roofing is the Terminal A contact. Currently, roof penetrations are not allowed except for kitchen uses. At those times, all within 60 days after opening for business in the Premises, Contractor shall:

I. Provide a written warranty of all materials and workmanship for a period of one (1) year effective from the date of beneficial occupancy of the Premises. Contractor(s) shall be required in its construction contract to repair and/or replace all defective materials, equipment and workmanship at no cost to the City, or the Concessionaire occupying the Premises;

II. Submit all required manufacturers' guarantees, maintenance manuals and other pertinent documents; preventative maintenance program details and schedule;

III. One (1) set of "as-built" drawings (and preferably specifications) and Computer Aided Drafting and Design (CADD) drawings, on CD duly certified by a Texas registered architect or registered engineer, no later than 60 days after opening for business in the Premises,

IV. Executed copies of all mechanics' lien waivers and/or releases or other lien waivers and/or releases on account of contractors work, notarized and unconditional, in such form as COSA shall have reasonable approved along with an architect's certification that the Premises have been constructed in accordance with the approved Final Drawings and are fully complete in accordance with all of such requirements specified or reference herein.

V. Statements of the total construction costs incurred by Contractor which is certified by a responsible officer of Contractor as correct together with copies of all supporting documentation required by the City under the Agreement with the city including copies of paid invoices.

Tenant IT Cable Policy

1.0 CABLE MANAGEMENT DOCUMENTATION FOR PDS:

2.0 SAT requires

Tenants to submit detailed information for all changes to the Perimeter Distribution System (PDS). This information will then be input into a computerized Cable Management System (CMS) and used to increase quality of service for Tenants through increased efficiency of tracking circuits and troubleshooting faults. Tenants may request the template schedule spreadsheet by contacting (210) 207-3411 or by email at aviation.support@sanantonio.gov and a SAT IT representative will respond.

2.1 IT SERVICE REQUESTS PROCEDURES: SAT recognizes two types of service requests based upon size and scope of the request: (1) Major construction requests are considered Tenant Improvement (TI) Projects; and (2) Non-major requests are referred to as Moves, Adds, and Changes (MACs) and are treated as routine operations. Both types of service requests and their respective processes are documented below:

2.2 TENANT IMPROVEMENT (TI): SAT Properties is the central point of contact for all Tenant Improvement projects, including IT projects. Tenants will be required to provide necessary submittal documents for TI projects to SAT Properties' manager at (210) 207-3461. SAT Properties will make a final determination whether the service request constitutes a TI or a MAC. Until specific policies and procedures are established by SAT for the management of TI, all TI requests shall be made to SAT pursuant to the procedures established herein. Projects that are a part of major operations including new construction, demolition, renovation, installation or removal of non-load bearing walls or partitions require TI approval. SAT IT will review Tenant's documented requests for completion and will perform site inspections to verify that installations progress in accordance to SAT technical specifications.

2.2.1 SUBMITTAL DOCUMENTS: All submittal documents required herein must be provided to SAT Concession's Office at **(210) 207-1690**. SAT Properties will then coordinate with all related divisions, including SAT IT, as applicable. This includes two (2) complete sets of documents to SAT IT for review at least **ten (10) business days** prior to the anticipated project start date. The information submitted for SAT IT review shall include the following:

- Tenant Name & Contact Information
- Type of Services Requested
- Building Floor (Lease Space)
- Drawing – Physical Cabling Pathways
- Telecommunications bonding and grounding plan

2.2.2 SAT IT RESPONSE – In response to Tenant's request to initiate a TI project, SAT IT will send written review comments and a PDS utilization plan[1] to the Tenant as applicable. This letter will advise Tenant to either forward original drawings or reproducible documents for signature, or revise and resubmit the documents. The response will also contain a SAT plan for PDS usage showing all termination locations, cross-connect points, and co-location assignments. Approximate time required: **five (5) business days from receipt of submittal.**

[1] The utilization plan only applies to **Terminal B** tenants and includes: (1) Fiber/Copper Pathway Connectivity Notes (SAT Form), and (2) Line Extension Connectivity Notes (SAT Form).

2.2.3 SAT AUTHORIZATION - When all review comments have been addressed, SAT IT will approve the Tenant's IT submittal documents and recommend authorization to SAT Properties for coordination with other SAT divisions recommendations.

2.2.4 RECORD DRAWINGS - Within **fifteen (15) business days** of completion of construction, Tenant must provide to SAT IT record drawings and Cable Management Documentation which accurately represent all as-built conditions, including the following documentation:

2.2.4.1 Submit two (2) hardcopies of full size drawings of the project. The submittal shall include a cover sheet identifying Tenant space occupant, key plan of portion(s) of SAT illustrated in drawing set, installing Contractor and date of submittal.

2.2.4.2 Submit one (1) electronic file softcopy of the project drawings saved in AutoCAD format compatible with current AutoCAD version in use at SAT.

2.2.4.3 Submit one (1) electronic file softcopy of project schedule spreadsheets saved in a CSV (Comma Separated Value) format on CD media. Coordinate with SAT for exact format requirements.

2.3 MOVES, ADDS, AND CHANGES (MACs): MACs are non-major telephony and data related improvement operations consisting of single or multiple moves of phone, data, and/or addition of lines and routing or adding cabling. These are minor, non-structural changes, leaving walls, floors, ceiling, and fixed equipment in place. For support and coordination on all Tenant MACs, please contact (210) 207-3411 or aviation.support@sanantonio.gov and a SAT IT representative will respond.

(2) **SUBMITTAL DOCUMENTS:** Tenant will be required to provide necessary submittal documents depending on the requirement. This includes two (2) complete sets of documents to SAT IT for review at least **two (2) business days** prior to the anticipated project start date. The information submitted to SAT IT shall include the following:

- Tenant Name & Contact Information
- Type of Services Requested
- Building Floor (Lease Space)
- Drawing – Physical Cabling Pathways
- Telecommunications bonding and grounding plan

2.3.1 SAT IT RESPONSE – In response to MAC requests, SAT IT will send written review comments and a utilization plan to the Tenant. This letter will advise Tenant to either forward original drawings or reproducible documents for signature, or revise and resubmit the documents. Approximate time required: **Two** (2) **business days from receipt of submittal**.

2.3.2 SAT AUTHORIZATION - When all review comments have been addressed, SAT will sign the Tenant's submittal documents and issue an authorization letter.

2.3.3 RECORD DRAWINGS - Within **fifteen (15) business days** of completion of construction, Tenant must provide to SAT IT record drawings and Cable Management Documentation which accurately represent all as-built conditions, including the following documentation:

2.3.3.1 Submit one (1) electronic file softcopy of as-built project drawings saved in AutoCAD format compatible with current AutoCAD version in use at SAT.

2.3.3.2 Submit one (1) electronic file softcopy of project schedule spreadsheets saved in a CSV (Comma Separated Value) format on CD

media. Coordinate with SAT for exact format requirements.

3.0 SITE ESCORT SERVICES: Only SAT IT, or its authorized representative, will have permission to access the MDF or IDFs. SAT IT will arrange for escort services as necessary when Tenant representatives need access to the MDF or any IDF. Requests for escort to perform routine maintenance should be submitted at least 48 hours in advance. Site escort services for emergency repairs will be provided according to the service level required at the time.

4.1 *MISCELLANEOUS*

4.1 SATELLITE SERVICE REQUIREMENTS: Tenants requiring satellite installation for cable television services shall submit installation requirements and plans including roof penetration and mounting details, to SAT IT utilizing the process described in Section 6.0 of this document, prior to the commencement of installation. The installation of a satellite dish utilizing space on the roof top of Terminal B will require a separate license agreement as prescribed by the San Antonio City Code for the use of City property. Such satellite dish installations shall be performed according to SAT technical specifications.

4.2 *WIRELESS POLICY*

4.2.1 APPLICABILITY: Tenants may install private Wi-Fi hotspots that utilize unlicensed spectrum within their own exclusively leased space.

4.2.1.1 Tenant takes full responsibility of devices; Airport is not responsible for any wireless devices belonging to Tenant.

4.2.1.2 Airport is not responsible for any detriments to the Tenant's Wi-Fi hotspot that occurs as a result of lack of security.

4.2.1.3 Tenant is responsible for monitoring the RF spectrum to prevent any interference with licensed spectrum and Airport wireless equipment and transmissions. In the event of such interference, and subject to reasonable notice, SAT reserves the right to disable the wireless signal in order to protect public safety and welfare.

4.3 REQUEST FOR CABLE TELEVISION SERVICE: Although coax cable is not part of the PDS, until specific policies and procedures are established by SAT for the management of coax cable infrastructure in Terminal B, any requests for the installation of cable television service shall be made to SAT pursuant to the procedures established in Section 2.0 of this document, prior to the commencement of installation.

5.1 TO DEVIATE FROM POLICY: Any request to deviate from these policies and procedures shall be requested in writing to SAT IT at aviation.support@sanantonio.gov. No exception will be granted without SAT written authorization.

Security and Special Airport Conditions (See Airport Rules & Regulations)

http://www.sanantonio.gov/Aviation/imagelibrary/uploadedfiles/upload- 217201130045pm.pdf

All materials, equipment, tools, gang boxes, vehicles, supplies and personnel are subject to security inspection at the beginning and end of each work shift. When in the Airport or on Airport property, all personnel will be required to maintain a visible site access badge on their person at all times. Any breach in security or failure to follow mandated rules can result in the removal of both the individual(s) involved as well as the General Contractor.

Contractor shall perform Contractor's Work so as not to:

1. unreasonably interfere with any other construction being performed at the Terminal or
2. unreasonably impair the use, occupancy or enjoyment at the Terminal and/or the Airport by City, the City, other airlines, (iii) other Concessionaires.

Contractor shall:

1. take all safety measures required to protect the Terminal and/or the Airport from injury or damage caused by or resulting from the performance of Contractor's Work and defend, protect and indemnify' City and the City's (including their respective agents, commissioners, officers, directors and employees), other airlines, other Concessionaires operating concession facilities or customers of any of them from any and all claims arising from or in connection with the death of or accident, injury, loss or damage whatsoever caused to any natural person or to the property of any person or entity arising out of, in connection with, or as a result of Contractor's Work;
2. repair any and all damage to the Terminals and/or the Airport as a result of Contractor's Work; and
3. require all contractors and subcontractors to comply with all of the requirements and Permits for the performance of Contractor's Work.

Site Access Badging Procedure (See Airport Rules & Regulations)

http://www.sanantonio.gov/Aviation/imagelibrary/uploadedfiles/upload-217201130045pm.pdf

The Contractor under contract to City will be responsible for Contractors identification badges to gain site access. All Contractors and Subcontractors prior to the preconstruction meeting will be required to comply with the site access process as required by Aviation Security. All badges are to be turned in to Security at projects completion.

Construction hard hat, hard soled footwear, safety glasses, and safety vest are required site equipment.

Once offloaded at the designated area, all vehicles will be relocated to a parking area, designated by the Aviation Security.

If any contractor/subcontractor employee wishes to exit the work area during work hours, the employee must store all tools and supplies in the work area job box.

During the construction periods, City, Contractor and their respective agents, consultants and employees, contractors and subcontractors shall observe all applicable rules and regulations and applicable directives imposed by the City of San Antonio and the Aviation Department as to the conduct of their

work. Contractor and its agents shall be responsible for securing, keeping and maintaining all of their equipment, materials, supplies, tools, work trailers, smoke, fumes/odors, dust and the like within the Contractor's Premises, or within a defined staging area for the exclusive purpose of supporting the Contractor's Premises construction, subject to City approval. Contractor shall also be responsible for ensuring that all construction debris is removed from the construction site daily, and that the site is neat and clean at all times. Contractor shall comply in all respects with procedures for project closeout and acceptance of the space as detailed in this Handbook and the BPA.

Escorts across Airfield Operations Area (AOA)

Escorts by contractor will be badged and AOA Licensed.

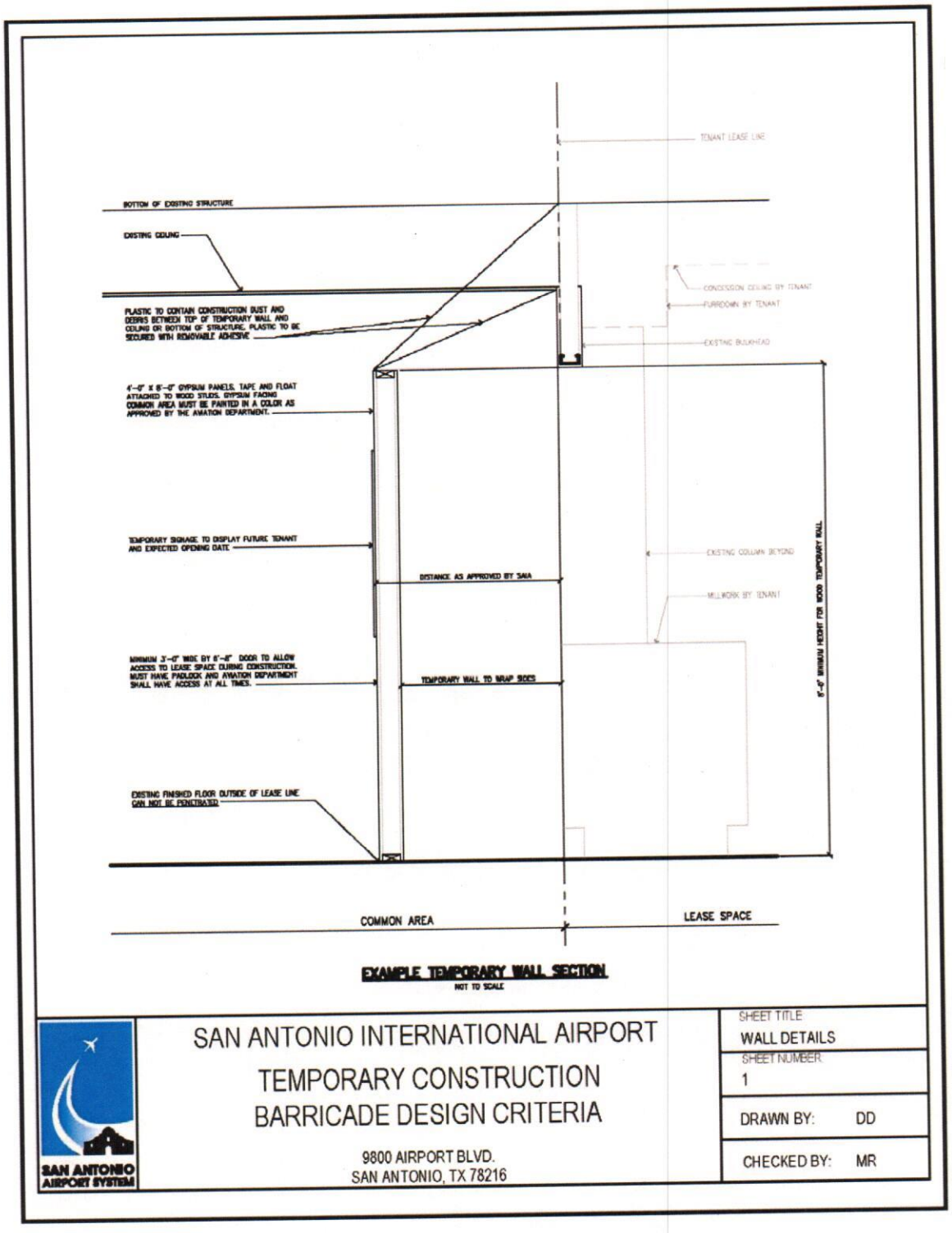

End of Document

II. SAN ANTONIO INTERNATIONAL AIPORT CONCESSIONS CONTRUCTION MANUAL

SAN ANTONIO INTERNATIONAL AIPORT CONCESSIONS CONTRUCTION MANUAL

CHAPTER CONTENTS

1.0 Introduction

- 1.1 Purpose of Document
- 1.2 Use of Design Criteria Manual
- 1.3 Definitions
- 1.4 City Concessionaire Work

2.0 Mechanical, Electrical, Plumbing, IT and Fire Protection Criteria

- 2.1 General Requirements
- 2.2 Design Professional
- 2.3 Mechanical Systems
- 2.4 Electrical Systems
- 2.5 Plumbing Systems
- 2.6 Fire Protection Criteria
- 2.7 Fire Alarm
- 2.8 IT: Telephone/Communications Service

3.0 Construction Requirements

- 3.1 Contractors and Subcontractors Insurance
- 3.2 Pre-construction Meetings and General Procedures
- 3.3 Aviation Concessions Division
- 3.4 Progress Meetings
- 3.5 Pre-construction Documents
- 3.6 Security Badging Procedure
- 3.7 Security of Existing Facilities and Special Airport Conditions
  - Escorts Across the AOA
  - Airport Security and Materials Delivery
  - Curb Side Deliveries
  - Ramp Side Deliveries
  - Materials Deliveries
- 3.8 Interruptions to Existing Facilities
- 3.9 Keys and Locks
- 3.10 Hazardous Material
- 3.11 Dust Control
- 3.12 Noise Control
- 3.13 Welding Permit
- 3.14 Barricades
- 3.15 Parking
- 3.16 Trash and Debris Removal
- 3.17 Floor and Roof Penetrations
- 3.18 Close-Out Requirements
- 3.19 Construction Deposit

4.0 General Construction Documents and Miscellaneous Items

- 4.1 Close-Out Documents
- 4.2 General Health and Safety
- 4.3 On-Site Health and Safety Station
- 4.5 Personal Protective Equipment
- 4.6 Welding
- 4.7 Fire Sprinkler Shut-Down (If Applicable)
- 4.8 Mechanical Electrical Shut-Downs (If Applicable)
- 4.9 Drug Free Workplace
- 4.10 Smoking
- 4.11 Escorts
- 4.12 Gas Powered Equipment
- 4.13 Lasers
- 4.14 Power Actuated Tools

1.0 INTRODUCTION

The City of San Antonio is the operator of **San Antonio International Airport ("SAT").** The City ("City") is responsible for providing consumer services to the public within the airport and has the right to lease certain areas for the operation of concession facilities within Terminals

Airline/Tenant or Concession construction processes for the **SAT Concession Program ("SATCP").** This Construction Manual is subordinate to the SAT Concession Management and Construction & Development Aviation and to such other permits and documents as may be required from time to time by the City. This manual, together with the Concession Agreement and the other referenced documents, shall govern the construction coordination process for the SATCP.

Tenant Coordination activities will be the responsibility of Concession Manager

1.1 Purpose of Document

This manual has been developed for Concessionaires, their Consultants and Contractors, intending to construct improvements, alterations, and/or new facilities at San Antonio International Airport (SAT). It is the intent of this manual to assist applicants so **Concessionaire Permit Application** (CPA) submissions can be complete; time frames for review can be more predictable; and construction and closeout requirements can be understood. The procedures outlined and referenced are applicable to all types of construction, alterations, equipment additions/replacements, and maintenance work performed by a Concessionaire within their leasehold.

This manual, together with the City approved Design Criteria Handbook Manual, all Concession Agreements including Exhibits and approved design and construction drawings required by Concession Management and Aviation Construction & Development comprise the Concessionaire Package. Concessionaires are strongly encouraged to become familiar with the intent and details of these documents prior to the commencement of work, and to become aware of the special characteristics of the terminal buildings and how their architectural elements, finishes, and materials will affect individual concession design solutions. Concessionaires must comply with the requirements and conditions set forth in the Concessionaire Package. Should there be any discrepancies between the Design Criteria Manual for Concession improvements and the Concession Agreement, the latter shall govern.

The City's Concession Manager and Aviation Construction and Development shall have absolute right of review and approval over all aspects of Concession Improvements, as well as the discretion to waive any of the Design Criteria Manual so long as the concept, quality, and character of the project are not significantly affected.

1.2 Use of Design Criteria Manual

Each Concessionaire their Consultants and Contractors must be familiar with the intent, scope, and detailed requirements of this manual before the construction process begins. It is the Concessionaire's, their Consultants and Contractors responsibility to visit the site and verify existing conditions. The Aviation Department and the City of San Antonio Development Services Department must approve each Concession design and a Permit must be issued as well as other pre-construction requirements which will be described further within before construction is allowed to begin. In conjunction with the Tenant Design Criteria Handbook, the Technical Design Manual and City's Concession Manager and Aviation Planning & Development, the information contained in this Construction Manual will constitute all Design Criteria, both Architectural and Construction requirements which will apply to all Concessionaires.

1.3 Definitions

The following definitions are used throughout this Construction Manual and shall be interpreted as follows:

- The term "City's Work" shall mean City's total responsibility for construction of improvements within the Terminal as set forth in Exhibit B of the Concession Agreement. City's Work shall be of a design, type, size, location, quality and nature as may be selected by City from time to time. Any item of work necessary to complete the Premises which is not hereinafter specifically included as part of City's Work shall be considered as part of Concessionaires Work.
- The term "Concessionaires Construction Requirements" includes, but is not limited to, the following; Exhibit B of the Concession Agreement, the Concession Design Manual, City issued Design Development Drawings, the CPA and its process requirements.
- The term "Concessionaires Work" shall mean Concessionaire's total responsibility (or any portion thereof) for the construction and improvement of the Premises.

1.4 City/Concessionaire Work

City's Work to be performed or provided at City's sole cost and expense shall be limited to the following: City shall not have any obligation to improve any portion of the Premises unless specified in Concession Agreement. Premises are being delivered by City to Concessionaire in its then existing "AS IS" "WHERE LOCATED" condition. City may perform the safe remediation or removal of any pre-existing Hazardous Materials located within the Premises. City may provide additional items of basic building shell or utility conduit services for the Premises as part of City's Work. If applicable, such additional items, if any, shall be provided in accordance with City's specifications.

1.4.1 City's Work shall include all work necessary to demolish any existing improvements located within the Premises, if any, required to return the Premises to a shell condition (including removal of ceiling grids, finish materials, storefront, light fixtures, partitions (excluding demising partitions) and all existing utility systems and components that will not be reused to serve the Premises).

1.4.2 Concessionaire's Work shall include all work necessary or required to complete the Premises, except those items of work that are specifically included under City's Work. Concessionaire's Work shall be subject to City and Concession Division and Construction and Development prior approval. Concessionaire's work shall be designed, fabricated, constructed and installed to comply with all of the requirements set forth in this document and all requirements set forth in the most current edition of Design Criteria Manual.

1.4.3 The design, fabrication, construction and installation of Concessionaire's Work must comply with each of the following requirements:

- Exhibit B of the Concession Agreement.
- This Construction Manual and the Design Development Drawings.
- The CPA and its process requirements.
- Concessionaire's Final Drawings, as approved by City of San Antonio's Aviation Construction and Development and Concessions Division.
- All applicable laws, ordinances, codes, regulations and the requirements of all federal, state or local permitting, building and inspection agencies, including the City, State and Federal Codes.
- All applicable standards of the American Insurance Association, The National Electric Code (latest edition), the American Society of Heating, Refrigeration and Air Conditioning Engineer's Guide (latest edition), the City's and City's insurance carriers, the local building codes and regulations and all other agencies having jurisdiction.

In the event of a conflict between any of the above-referenced items, the most stringent requirement shall govern each increment of Concessionaire's Work.

1.4.4 All aspects of Concessionaire' Work shall be performed in a professional, first-class and workmanlike manner and shall be in a good and first-class and usable condition as of the date of completion and maintained in such condition at all times. All materials used in Concessionaire's Work, Concessionaire's construction of the Premises and installations made as a part of Concessionaire's Work shall be of new, commercial grade and first-class quality. After Concessionaire's initial construction of the Premises, any and all remodeling and alterations shall be performed in accordance with all of the Concessionaire's Construction Requirements.

All contracts and subcontracts for the performance of Concessionaire's, Airline and FBOs Work shall require:

(1) that all contractors and subcontractors provide labor that can work in harmony with other labor employed or to be employed at the Airport in accordance with this Agreement, properly bonded and access grants as dictated by the Base Concession Manager and/or the City;

(2) Insurance coverage and suretyship as defined by lease agreement to the City for the protection of The City for the protection of the City, its laborers, supplies, contractors, and subcontractors designated management representatives and the general public;

(3) that all contractors and subcontractors comply strictly with all of the applicable provisions of the Lease Agreement and related Exhibits, Design Handbook, BPA process, all applicable permits, and/or as otherwise required by code;

(4) in the case of Fixed Improvements, performance and payment bonds from Concessionaire or its contractor, in form and substance reasonably satisfactory to the City, each of which shall name the City as an additional oblige and aggregating in the penal sum equal to all of Concessionaire's construction contracts valid through duration of project

1.4.5 Concessionaire shall be solely responsible for the investment required for the planning, design, development, construction, fabrication and installation of all Fixed Improvements and other leasehold improvements and Operating Equipment necessary to complete the Premises as required to provide the retail concession services within the Terminal.

2.0 MECHANICAL, ELECTRICAL, PLUMBING, IT AND FIRE PROTECTION CRITERIA

2.1 General Codes

Contractor is responsible for scheduling inspections by the City of San Antonio Development Services and other inspectors as necessary, and for compliance with their requirements. Provide notification of inspection date/time to Concession Manager. A copy of all inspection reports and the Certificate of Occupancy must be submitted to Concession Manager upon completion of the work. In the event Contractor is notified of any violations of codes by the jurisdictional authorities or by Aviation, Contractor shall correct such violations within seven (7) calendar days from such date of notification. Construction shall comply in all respect with currently applicable federal, state, county and/or local statutes, ordinances, regulations, laws and codes and ordinances. The City of San Antonio is currently under the 2015 *International Codes, 2014 NEC and including the 2015 International Energy Conservation Code*. The list of adopted codes and local amendments for these codes can be found at: New Chapter 10 - Building Related Codes. In addition/coordination and compliance with the following is required

- City of San Antonio Fire Marshall
- City of San Antonio Department of Health
- American with Disabilities Act and Texas Accessibility Standards

2.2 Licensed Professional Engineer

A professional engineer licensed in the state of Texas shall prepare all calculations, drawings and specifications in accordance with all applicable codes and recognized engineering practices. The engineer shall be required to be available if any questions or modification to the system is required.

2.3. HVAC Existing Systems Description

Airport uses a two-pipe chilled water system to provide cooling or heating water to all air handlers or VAV boxes. It is the Concessionaire's responsibility to add additional VAV boxes if required to meet their heating and cooling needs. Return air and smoke purge are accomplished through the plenum, and it is the Concessionaire's responsibility to ensure adequate airflow into and through the plenum. All insulation must have a flame spread/smoke developed rating not higher than *25/50.* All ducts are to be supported from bridging not to exceed ten foot intervals. An air balance report must be submitted to the City prior to the final inspection.

2.3.1 Project Review

The Aviation Department will review the drawings 30%, 60% and 100% for general compliance with the Mechanical Design criteria of the Airport facilities. It is the Contractor's responsibility to submit documents to the City of San Antonio Development Services (www.sanantonio.gov) for review and issuance of a Building Permit. It is the Contractor's responsibility to ensure that the Contractor's system will perform satisfactorily and is in compliance with all applicable codes and regulations. The average permit review time is 2-3 weeks. Development Services does offer an expedited review with associated fee.

2.3.2 Submission Requirements

The Concessionaire shall submit complete plans and specifications for Mechanical work consisting of the following at a minimum:

- HVAC (if applicable), plumbing (if applicable), and fire protection floor plans (if applicable).
- Plumbing riser diagram indicating pipe sizes and connection points. Heating and cooling load calculations.
- HVAC Testing and balancing report submitted upon completion of installation
- Supply air, chilled water (if any) requirements. As-built drawings upon project completion.
- IT and Electrical Plans
- Material Sheets
- Elevations

2.3.3 Mechanical and IT Room Access

Facilities Maintenance will provide access to the mechanical rooms that provide service to the Concession space. Access requests should be submitted to Concession Manager for coordination 48 hours in advance.

2.3.4 General Requirements
The Concessionaire **shall** furnish and install all mechanical work required for and within the Concessionaire premises, which is not furnished as part of the Base Building work.

- Mechanical system modifications requiring shutdown of other portions of the mechanical systems shall be done upon approval of Aviation Construction and Development and Facilities Maintenance. Notification must be provided to Concessions Division and the City /Airport 48 hours prior to the shutdown requirement.
- Obtain permission from the City through Concessions Division and Construction and Development prior to core drilling through floors or roof structure. Any roof penetrations will be preformed by a contractor selected by the Aviation Department and billed to Concessionaire. All coring for roof or floor penetrations will require 72-hour notice.
- Cutting and patching to be performed as required, to return all remaining original finishes to their original condition.
- Floor and wall penetrations must be sealed and dampered to maintain occupancy separations where required.
- Welding or torch cutting under the direct supervision and by approval of the Concessions Division and/or Aviation Department personnel. Comply with the Airport's Fire Marshal's regulations and notify them prior to welding or torch cutting.
- As-built drawings are to be maintained by the Concessionaire mechanical contractor and submitted to the City. Record exact pipe, duct, and equipment routing and location, and sizes of equipment.

2.3.5 Identification and Labeling
Required for all equipment, pipes and ducts within the Concessionaire space:

- Laminated plastic nameplates, black-white-black with engraved characters I" high for all equipment. Pipe markers, ANSI size, 3/4 letters, pre-printed, mounted on pipe or duct penetrating walls and at *25'* intervals.
- Identify pipe fluid or duct air type.

2.4 Electrical Systems Design Criteria

All electric designs must comply with the City of San Antonio current codes. COSA is currently under the 2015 *International Codes, 2014 NEC and including the 2015 International Energy Conservation Code*. The list of adopted codes and local amendments for these codes can be found at: New Chapter 10 - Building Related Codes

The City of San Antonio also requires the following:

1. Coordination of all electrical work with the City Airport Electrical Department prior to commencing any work.
2. All conduit be a **minimum3/4"** EMT with compression fittings. In wet areas, all conduit is to be rigid. All wire to be T14HN or TWIHN rated at 105 degrees at 600 volts.
3. No MC or other armored interlock is allowed. "Greenfield" or "Seal Tight" whips are to be a maximum of six feet.
4. All ceiling mounted transformers must be supported from the building structure independent of all other systems and a continuous ceiling must separate the transformer from the plenum.
5. All junction and pull boxes must be labeled with appropriate panel name and circuit numbers.

Food Court Food/Beverage Concessionaires will also be required to install sub metering for electric. All floor penetrations and floor boxes must be UL rated for a 2-hour **fire** separation. The Concessionaire will also be required to label the switch in the MER with the space number and Concessionaire name as well as label the Concessionaire's Panel with MER and Switch gear name. Concessionaire is to receive approval from Concessions Division and the Airport Electrical Department prior to start of work for all tie-ins and shutdowns.

2.5 Plumbing Criteria

All Plumbing Designs **must comply with** the City of San Antonio current codes. COSA is currently under the 2015 *International Codes, 2014 NEC and including the 2015 International Energy Conservation Code*. The list of adopted codes and local amendments for these codes can be found at: New Chapter 10 - Building Related Codes

The City of San Antonio also has established the following criteria:

1. PVC piping will not be used above the ground within buildings.
2. Clamps for no-hub piping will be those manufactured by Clamp-all Corp, Huskey SD series 4000 or approved equal.
3. All hubless pipes will be anchored at each side of the hub and at five foot intervals.
4. All trapezes will be supported from bridging or structural beams not from the roof decks.

5. All abandoned pipes will be removed to the source or point of discharge. All openings will be plugged.

6. All valves and pipes will be labeled to identify use; all flows will also be indicated.
7. All hot and cold piping will be insulated using "I" thick Owens Corning Fiberglass "25A5J/SSL".
8. All pipe hangers longer than 12" will be seismic designed.
9. All piping will be hydrostatically tested as per Code.
10. All floor sinks and drains will have flashing to prevent water penetration.
11. In all wet areas, a membrane will be installed under all floor surfaces to prevent water penetration. 6 hr, water test required.
12. All shut downs and tie-ins must be coordinated through the Concession Manager and Airport Maintenance. All tie-ins must be approved prior to start of work.
12. Electric tank less water heater required.

2.6. Fire Protection Criteria

In general, all Fire Protection Systems must comply with all building, mechanical, electrical and fire protection, and lighting protection to new roof equipment by warranty holder contractor. (National Fire Protection Association (NFPA) Standards).

This design must be submitted to Concession Manager and Facilities Maintenance during the initial submission for approval prior to the start of construction. In most cases, tamper/flow switches are not required, as the sprinkler system is either monitored by entire zone or unavailable in concourse areas. All sprinkler shut downs (if required) are to be performed by City's authorized agent and billed to concessionaire. A minimum of 3 days written notice must be given. The Concessionaire is also responsible to notify the Concession Manager to arrange for a Fire Watch condition. It is the Contractor's responsibility to pay all costs incurred for the shut down. Prior to the Final Inspection, a hydrostatic (controlled inspection) test must be performed and results submitted in writing to the COSA. The warranty service provider is:

Terminal B:
Casteel Automatic Fire Protection
2836 Delafield
Houston, Texas 77023
(713) 921-5333

Terminal A:
Johnson Control

The Concessionaire must have all required fire extinguishers in place prior to the final inspection.

2.7 Fire Alarm System (If Applicable for Food Service Only)

It is the Concessionaire's responsibility to purchase all fire alarm devices required per code and install them in the space. It will be the monitor's responsibility to contact the Communications Center at the Airport in the event of fire or trouble alarm.It will be the Concessionaire's responsibility to pre-test the system and provide proof prior to the Final Inspection. A tie-in to the base building system is provided. The warranty service provider is:

(Terminal B)
Simplex Grinnell San Antonio(492)
1070 Arion Circle Suite 102
San Antonio, TX 78216
Phone: 210-402-6311
Fax: 210-402-6195

(Terminal A)
Johnson Control

The Concessionaire must also have all required fire extinguishers in place prior to the final inspection.

2.8 Telephone/Communication Service

All telephone, communication and data line services are the Contractor's responsibility. The Contractor must select a sub-contractor, which will be acceptable to Aviation Department to run the required cable from the main switchboards to the space. It is suggested that the Contractor schedules this service when they open the account for telephone service with AT&T, long distance provider and/or Internet service provider (ISP). All communication wires must be run in EMT conduit and labeled as such. All EMT conduits provided to accommodate telephone and data line service will be responsibility of the Contractor. Contact IT Manager for approval of all wiring in terminals.

2.8.1 Mechanical and IT Room Access

Facilities Maintenance will provide access to the mechanical rooms that provide service to the Concession space. Access requests should be submitted to Concession Manager for coordination 48 hours in advance.

Please contact Aviation IT Manager and Concession Manager, to coordinate any cable installations.

3.0 CONSTRUCTION REQUIREMENTS

All contracts and subcontracts for any portion of Concessionaire's Work shall require:

1. All contractors and subcontractors provide labor that can work in harmony with other elements of labor employed or to be employed at the Airport.
2. Insurance coverage and surety ship reasonably satisfactory to City and Concessions Division and Construction and Development for the protection of City, suppliers, contractors, subcontractors and the general public.
3. All contractors and subcontractors comply strictly with all of the applicable provisions of the Concession Agreement, this manual, Concessionaire's Agreement with the City and the CPA.
4. For all Fixed Improvements and other leasehold improvements to the Premises; Provide performance bonds and payment bonds from the Concessionaire or its general contractor, in form and substance satisfactory to City and Concessions Division and Construction and Development, each of which shall name City and Concessions Division as an additional insured and which shall be in the penal sum equal to the amount of Concessionaire's total construction contracts and subcontracts. Further, Concessionaire shall comply and shall cause all of its contractors and subcontractors to comply with the City of San Antonio's nondiscrimination and affirmative action provisions.

During the construction periods at the Terminals, the City, Concessionaire and their agents, servants, employees and contractors shall be permitted entry and access to the Terminals and to the Premises for the purpose of performing and completing all work necessary to make the Premises and other improvements ready for use, occupancy and rental. During the construction periods, City, Concessionaire and their respective agents, consultants and employees, contractors and subcontractors shall observe all applicable rules and regulations and applicable directives imposed by the City of San Antonio and the Aviation Department as to the conduct of their work. Concessionaire and its agents shall be responsible for securing, keeping and maintaining all of their equipment, materials, supplies, tools, work trailers, smoke, fumes/odors, dust and the like within the Concessionaire's Premises, or within a defined staging area for the exclusive purpose of supporting the Concessionaire's Premises construction, subject to City approval. Concessionaire shall also be responsible for insuring that all construction debris is removed from the construction site daily, and that the site is neat and clean at all times. Concessionaire shall comply in all respects with procedures for project closeout and acceptance of the space as detailed in this document and the CPA.

3.1 Contractors and Subcontractors Insurance

All policies of insurance and bonds required in the Concession Agreement shall be issued for the protection of the City, Concessionaire in accordance with their respective insurable interest. The terms of the policies and bonds and the insurer or surety shall be subject to the reasonable approval of the City.

Concessionaire shall provide, maintain and identify the City as an additional insured, with respect to the insurance protection required under the provisions outlined in the Concession Agreement.
Each of Concessionaire's insurance policies required under Section 1 1.0 I of the Concession Agreement shall name the following entities as additionally insured:

• THE CITY OF SAN ANTONIO
Aviation Department

3.2 Pre-Construction Meetings and General Procedures

Prior to the commencement of construction, a Pre-Construction meeting must be held. This "Pre-con" takes place after:

(1) Signed and executed Construction Agreement with the City of San Antonio is delivered to all parties and
(2) A Building Permit is issued by the City of San Antonio Building Inspection Department.

Concession Manager will arrange the Pre-Con when items meet the requirement. The Project Superintendent and General Contractor must attend the Pre-Construction meeting with the Aviation Department. The following documents must be submitted at the Pre Construction meeting:

1. General Contractor's Insurance Certificate
2. List of all Sub Contractors with emergency phone numbers including the GC's
3. Material Safety Data sheets for products to be used. The City reserves the right to refuse the use of any substance believed may be hazardous when used in the Airport.
4. Overall Project Timeline Summary with preliminary delivery schedules and unloading requirements
5. Signed Lease or Letter of Acceptance for space
6. $5,000 Security Deposit per location payable to "City of San Antonio"
7. A Building Permit issued the City of San Antonio
8. Performance and Payment Bonds delivered to City of San Antonio (COSA) in the total amount of construction contract costs for "Fixed Improvement" naming the City as additional oblige.
9. Any other documents required by the City of San Antonio.
10. Asbestos Report
11. Two (2) sets of sealed and signed drawings
12. Architect's Letter of introduction
13. Copies of Electrical and Plumbing Licenses

Contractor shall not be permitted to commence any work until all requirements of this manual, the CPA and Exhibit B of the Construction Agreement have been completed.

1. Two sets of stamped and signed drawings
2. Architect's Letter or Introduction
3. Copies of Electrical and Plumbing Licenses
4. List of all Sub Contractors with emergency phone numbers including the GC's and the Architect's
5. Schedule

3.2.1 General Procedures

The following documents will be submitted to the On-Site Concessionaire Coordinator ten business days prior to the start of construction:

1. Approved Insurance Certificate (must be approved by COSA)
2. 24 Hr. Emergency Contact List (includes Corporate mailing address and fax number)
3. List of construction workers with security clearance badges
4. All Material Safety Data Sheets for products which will be used
5. Overall Project Summary (preferably accompanied by Microsoft Project Schedule on disk)
6. Signed Letter of Acceptance for space
7. $5,000 Security Deposit per location payable to the City of San Antonio (COSA)
8. Performance and Payment Bonds delivered to City of San Antonio (COSA) in the total amount of construction contract costs for **"Fixed Improvements"** naming the City as additional obligees
9. Any other documents required by the City of San Antonio

3.3 Aviation Concessions Division

Tenant Coordination activities will be the responsibility of Concessions Division. Please contact Raymond Perales at (210) 207-3423 phone, or by email at raymond.perales@sanantonio.gov with any questions concerning coordination, pre-construction meetings, notices to the City, construction inspection or any other questions you may have.

3.4 Progress Meetings

Concession Manager will establish progress meetings. Representatives of City and Concessionaire shall attend on-site progress meetings with such periods of frequency during the performance of Concessionaire's Work as may be mutually agreed upon but not less frequently than weekly. Concession Manager will be responsible for scheduling and conducting the progress meetings.

3.4.1 The Contractor will provide at the end of each week the following documents:

1. Three week look ahead schedule
2. All deliveries for following week
3. Storage and escort needs
4. Minimum 24 hour notification of all power, water, mechanical Shut Downs
5. All welding and burning requirements
6. List of Badged construction workers (if there are additions/deletions)
   Material Safety Data Sheets (additional/revised)
7. 24 Hr. Emergency Contact List (if there are revisions)

3.5 Pre-Construction Documents

Prior to the commencement of construction, a Pre-Construction meeting must be held. This "Pre-con" takes place after:

(1) Signed and executed Construction Agreement with the City of San Antonio is delivered to all parties and
(2) A Building Permit is issued by the City of San Antonio Building Inspection Department.

Concession Manager will arrange the Pre-Con when items meet the requirement. The Project Superintendent and General Contractor must attend the Pre-Construction meeting with the Aviation Department. The following documents must be submitted at the Pre Construction meeting:

a) General Contractor's Insurance Certificate
b) List of all Sub Contractors with emergency phone numbers including the GC's
c) Material Safety Data sheets for products to be used. The City reserves the right to refuse the use of any substance believed may be hazardous when used in the Airport
d) Overall Project Timeline Summary with preliminary delivery schedules and unloading requirements
e) Signed Lease or Letter of Acceptance for space
f) $5,000 Security Deposit per location payable to "City of San Antonio"
g) A Building Permit issued the City of San Antonio
h) Performance and Payment Bonds delivered to City of San Antonio (COSA) in the total amount of construction contract costs for "Fixed Improvement" naming the City as additional oblige
i) Any other documents required by the City of San Antonio
j) Asbestos Report

Contractor shall not be permitted to commence any work until all requirements of this manual, the CPA and Exhibit B of the Construction Agreement have been completed.

3.6 Security Badging Procedure

Due to the volume of construction taking place and the short duration of the Concessionaire's work, the Concessionaire under contract to City will be responsible for Concessionaire's Contractors badges and required background checks. All Contractors and Subcontractors prior to the preconstruction meeting will be required to comply with the security identification badging process as required by Airport Police, if the concession location is post security.
The badging procedure is as follows:

The Concessionaire, General Contractor and all subcontractors to be employed by the Concessionaire will arrange a time with the Airport Badging/ID office to complete the necessary forms, stand for the required pictures and schedule a security training class prior to receiving the appropriate security badge. Application forms are available from the Airport Badging/ID Office located west of the Terminals and must be executed by the individual employee, the Contractor and authorized Concessionaire representative.
All individuals must bring two (2) forms of identification (social security card, military id and valid driver's license or passport) and complete the security badge application at the Badging/ID office for badge processing to begin. The badging process usually takes from 24 to 72 hours.

White badges will allow an individual to pass through the Security Checkpoint only, and do not allow the individual access to the Airfield or activate secure doors. All white badges must be escorted by an individual with an appropriate yellow or red badge when accessing the airfield or passing through secure doors.
Yellow badges will allow an individual to pass through Security Checkpoints, access to the immediate airfield area surrounding the terminal buildings.

The Concessionaire will be responsible for collecting and returning all contractor badges to the Airport Police, upon completion and opening of the concession location. The cost associated with any badge not returned will be deducted from the Contractors deposit.

3.7 Security of Existing Facilities and Special Airport Conditions

(See Airport Rules & Regulations http://www.sanantonio.gov/Aviation/imagelibrary/uploadedfiles/upload-217201130045pm.pdf)

All materials, equipment, tools, gang boxes, vehicles, supplies and personnel are subject to security inspection at the beginning and end of each work shift. When in the Airport or on Airport property, all personnel will be required to maintain a visible site access badge on their person at all times. Any breach in security or failure to follow mandated rules can result in the removal of both the individual(s) involved as well as the General Contractor.

Contractor shall perform Contractor's Work so as not to: (i) unreasonably interfere with any other construction being performed at the Terminal or (ii) unreasonably impair the use, occupancy or enjoyment at the Terminal and/or the Airport by City, the City, other airlines, (iii) other Concessionaires.

Concessionaire shall (i) take all safety measures required to protect the Terminal and/or the Airport from injury or damage caused by or resulting from the performance of Contractor's Work and defend, protect and indemnify' City and the City's (including their respective agents, commissioners, officers, directors and employees), other airlines, other Concessionaires operating concession facilities or customers of any of them from any and all claims arising from or in connection with the death of or accident, injury, loss or damage whatsoever caused to any natural person or to the property of any person or entity arising out of, in connection with, or as a result of Contractor's Work; (ii) repair any and all damage to the Terminals and/or the Airport as a result of Contractor's Work; and (iii) require all contractors and subcontractors to comply with all of the requirements and Permits for the performance of Contractor's Work.

3.7.1 Terminal A
All materials, equipment, and workers must enter Terminal A through the Loading Dock, off load and transfer all material, equipment and workers via the freight elevator to the concourse level. All materials, equipment and workers will be required to enter the concourse through security doors adjacent to the freight elevator, which will require activation by a yellow or red security badge. All security doors require badges to be swiped through the reader, prior to entering the concourse area. A security checkpoint will be provided either on the loading dock or outside the freight elevator on the concourse level. All deliveries, materials, equipment, tools and workers are subject to search and an inventory will be provided to the Airport Police, an Aviation Department representative or their designee. All personnel entering the concourse will be required to display an SAT security badge; there will be no exceptions. If a General Contractor wishes to use a subcontractor who does not have a badge, that subcontractor must allow adequate time prior to reporting for work for the badging process, no escorts or special permits will be provided. In all cases the General Contractor and ultimately the Concessionaire are responsible for the actions of all involved with the construction of the space.

Once off loaded all vehicles will be relocated to a parking area, designated by the Aviation Department or Airport Security for the duration of the shift.

In certain circumstances, Contractors will be allowed to off load oversize equipment or supplies curbside on the ticketing level. All requests for curbside delivery will require 48 hours notice to Concession Division Consulting and a Police escort for the vehicle and entry through the curbside secure doors.

3.7.2 Terminal B
All materials, equipment, and workers entering Terminal B require entrance through a pre-determined Security Checkpoint. All deliveries, materials, equipment, tools and workers are subject to search prior to entering the airfield operations area. All tools, materials and equipment will be inventoried and the list will be provided to the Airport Police, an Aviation Department representative or their designee upon arrival at the checkpoint. All personnel entering the concourse will be required to display an SAT security badge; there will be no exceptions.

Once offloaded, all vehicles will be relocated to a parking area, designated by the Aviation Department or Airport Security for the duration of the shift.

If any contractor/subcontractor employee wishes to exit the work area during work hours, the employee must store all tools and supplies in the work area job box.

Concessionaire shall perform Concessionaire's Work so as not to: (i) unreasonably interfere with any other construction being performed at the Terminals or (ii) unreasonably impair the use, occupancy or enjoyment at the Terminals and/or the Airport by City, the City, other airlines, (iii) other Concessionaires operating concession facilities (iv) customers of any concessionaire or (v) the traveling public.

Concessionaire shall (i) take all safety measures required to protect the Terminals and/or the Airport from injury or damage caused by or resulting from the performance of Concessionaire's Work and defend, protect and indemnify' City and the City's (including their respective agents, commissioners, officers, directors and employees), other airlines, other Concessionaires operating concession facilities or customers of any of them from any and all claims arising from or in connection with the death of or accident, injury, loss or damage whatsoever caused to any natural person or to the property of any person or entity arising out of, in connection with, or as a result of Concessionaire's Work; (ii) repair any and all damage to the Terminals and/or the Airport as a result of Concessionaire's Work; and (iii) require all contractors and subcontractors to comply with all of the requirements and Permits for the performance of Concessionaire's Work.

3.7.3 Escorts across Airfield Operations Area (AOA)
All requirements for escort across the AOA will be coordinated with Concession's Division. The Concession's

Division will develop a standing schedule for work shift commencement and ending, notify Airport operations and the Airport Police for escort availability. Delivery of materials which cannot be accommodated by the contractor's vehicles and requires supplier vehicles to be escorted across the AOA, requires 72 hours notice to Concession's Division. All scheduled escorts are subject to priority conditions on the airfield and may not be provided as scheduled.

3.7.4 Airport Security and Materials Delivery
Most of the work will take place on the Concourse Level and the security clearance required on this level is the mandatory SAT security badge. After the last flight, the security checkpoint will be closed and only yellow or red badged personnel are allowed access to the Concourse through secured doors. The Concessionaire's General Contractor is required to notify Concessions Division at least three days in advance of all deliveries so they can coordinate with all parties involved to allow access. Yellow badges may be provided to Concessionaire Contractor's on limited bases for access through secured doors and all other personal including subcontractors will be provided White badges for identification. The Concessionaire and Concessionaire's General Contractor are responsible for ensuring that all individuals follow the rules concerning access to the Terminals. Failure to comply with these rules can lead to the removal of the individual(s) involved as well as the Concessionaire's General Contractor

3.7.5 Curb Side Deliveries
For extremely large items and depending on the location of the space, a Curbside delivery may be necessary. Contact the Concessions office at least five working days prior to delivery. Only soft-wheeled dollies may be used; no forklifts, pallet jacks, debris containers or extremely heavy objects are allowed. General Contractor and their sub's are subject to repair charges if damages to the terrazzo flooring occurs during construction. The Terminals floors are constructed and designed primarily for pedestrian usage, therefore the Concession Contractor must utilize the necessary floor protection. Since this type of delivery requires several departments to be notified, it is imperative to contact the Concessions Division early in the project.

3.7.6 Ramp side Deliveries
Larger items may be delivered to the ramp side of the Terminal. These deliveries require an official escort. Contact the Concession's Division at least *5* working days to arrange for all ramp side deliveries. Delivery drivers will be inspected and enter through Gate 20 and will follow the escort and observe all posted speed limits and signage. **ALL AIRCRAFT HAVE THE RIGHT OF WAY.**

3.7.7 Materials Delivery
Walk route with Concession's Division prior to delivery
Notify the Communications Center of schedule for the arrival of the delivery vehicle
Start delivery after 7 p.m. and finish by 5am
Use the loading dock freight elevator in Terminal A
Special deliveries to loading dock ramps require an escort and prior approval

At no time will hard cast steel wheels be allowed to cross facility flooring. It is imperative that extreme caution be taken to avoid any damage to the flooring. General Contractor's and their sub's are subject to repair charges if damages to the terrazzo flooring occur during construction.

3.8 Interruptions to Existing Facilities
At **NO** time are construction activities to interfere with the normal operations of the Terminal. All deliveries and debris removal must take place between 7 p.m. and *5* a.m. in the event that there are passengers within the Terminal during these hours due to uncontrolled events (i.e. inclement weather); prudence and common sense must take place. All items and debris are to be kept within the space; nothing is to be left in the Concourse area. All welding, burning, chopping, jack hammering is to take place between 7 p.m. and *5* am. There is to be no welding/burning within the confines of the concourse; all work must take place behind the barricade. In the event that construction activities interrupt airport operations, SAAS reserves the right to have the contractor responsible removed from the project. It is **imperative that there is no impact to passenger flow.**

All barricades must have self-closing hinges and be kept closed at all times and locked during non- working hours. Concessions Division and Construction and Development must have a key or combination to the barricade and all items stored within the space must be inventoried and declared to Airport Security prior to bringing them into either Terminal. All tools or equipment remaining in the concession space after working hours must be store in a locking job or gang box. It will be the Concessionaire Contractor's responsibility to maintain the barricades both functionally and aesthetically. The Concessionaire Contractor will be responsible to legally dispose of the barricade upon completion of the concession build out.
SAAS will require a construction deposit of $5,000.00 per unit from Concessionaire's general contractor prior to construction. City will not release the deposit until satisfactory completion of all construction and all requirements of this manual and Exhibit B of the Concession Agreement. The City Building Inspection Department and the Aviation Department must specify' that all of Concessionaire's Work has been completed and acceptable by City, prior to release of the construction deposit.

3.9 Keys and Locks

The Aviation Department has provided standard equipment throughout the facility. All locks must be the following **Sargent Signature Series** product line:

Entrance/office; cylindrical level lock (63-10G05-LB Key LL 26D with IC core LB Key Way)
7900 Mortise Lock; 63-8205 LNB US26D
480 Series Inside Turn Lever (63-10-480-26D; LB Key Way, control #236511)

It is the Concessionaire Contractor's responsibility to give to the Concession's Division a key or combination to the barricade in the event that SAAS requires access to the space. Contact **Mike Castillo Aviation Department, Access Control at 207-3537** for assistance.

3.10 Hazardous Material

The Contractor must submit to Concession Manager and Aviation Construction and Development all Material Safety Data Sheets for all materials used in the construction process. Concession Manager and Aviation Construction and Development reserve the right to reject any such materials, which may pose a hazard or potential hazard to the Terminals and its patrons. Under no circumstances will any construction debris be placed into any Terminal refuse containers or dumpsters. The Contractor is responsible for the legal disposal of all debris generated during the build out process.

Currently, as a result of the City's abatement efforts all undeveloped Concession spaces are believed to be asbestos free. An Asbestos Report for each tenant space under construction will be provided to Concession Manager and Aviation Construction & Development and must be submitted to the City Building Inspection Department as part of the Building Permit submittal process. In the event that the Contractor is remodeling a space vacated by a previous concession or remodeling a current concession space, an updated asbestos survey is required and will be the sole responsibility and cost of the Contractor.

In the event Contractor encounters any pre-existing Hazardous Materials during the performance of Contractor's Work for the initial construction of the Premises, Contractor shall immediately notify City verbally and in writing and provide all details related thereto. In no event shall Contractor perform any of Contractor's Work that will in any way disturb any such Hazardous Materials so encountered until City has determined whether it is necessary to rededicate or remove the same. City shall have the right to perform the safe removal, encapsulation, enclosure or other disposition of asbestos, polychlorinated biphenyls or other hazardous or toxic materials (collectively, "Hazardous Materials") that exist within the Premises as of the date Contractor was delivered possession of the Premises. City shall rededicate or remove (or reimburse reasonable costs incurred by Contractor) any such pre-existing Hazardous Materials that City determines, in its discretion, is necessary for Contractor to perform Work.

3.11 Dust Control

Dust is a major element in construction that needs to be controlled at all times. The contractor shall use all means necessary to keep dust to a minimum by:

- The Concessionaire Contractor will use and maintain dust cover over barricade.
- Concessionaire Contractor will insure that there are no holes in the dust cover and that it is securely fastened to the barricade and bulkhead. In the event that there should be rips or tears in the dust cover, Concessionaire Contractor will replace the dust cover immediately with the exact type of material.
- Concessionaire Contractor will utilize construction methods and equipment that minimizes dust.
- Concessionaire Contractor will provide dust masks and respirators (if necessary) as per OSHA 29 CFR 1910.134 and 29 CFR 1926.103
- In the event that excessive dust cannot be avoided, Concessionaire Contractor will maintain a mist over the area. Concessionaire Contractor will insure that the wheels of all carts and dollies are clean of dust and dirt so not to track through the Airport common areas. All dollies and cart are to have properly operating rubber wheels. No metal or studded wheels will be permitted.

3.12 Noise Control

During the hours of 5:00 a.m. till 10:00 p.m., a ban on excessive noise will be established. Excessive noise is considered to be jack hammers, chipping guns, excessive hammering, electric chop saws, floor grinders/scrapers, and powder actuated tools; these items may only be used between 10:00 p.m. and 5:00 a.m.. This time frame may change due to location of the Concession and the operating flight in the general area. Tools that may be permitted for day usage are hand tools, electric drills, circular saws and reciprocating saws. In the event of a complaint by the City or an Airline, the On-Site Concessionaire Coordinator will immediately stop the activity that is the cause of the complaint.

The Concessionaire Contractor will be responsible to issue all workers proper hearing protection as per OSHA 29 CFR 1926.52 and 29 CFR 1926. 1 01

3.13 Welding Notification in the Concession Space

No welding or burning can take place without notification to Concession Manager and approval by Concession Manager. A Welding Request must be submitted to Concession Manager at least 5 days in advance of the work. Concession Manager will pursue approval and notify process required. The notice is both site and occurrence specific; each additional requirement for welding or burning will require an additional notice. If a fire watch is required by Aviation Fire Department, fee will be paid by concessionaire.In order to be able to field weld, the following criteria must be met and maintained for the duration of all welding procedures:

1. Submit a Welding Application at least five days in advance.
2. Provide all fire watches required and all fire extinguishers and fire blankets
3. Use and maintain all required personal protective equipment
4. Maintain a fire watch for the duration of the welding
5. Properly secure all gas bottles. Extra gas bottles are not to be stored inside the Terminal.
6. All gas bottle storage, handling, transporting and usage must comply with OSHA 29 CFR 1926.3 50 S.
7. No welding in public view (storefronts included) may take place from 5am till 11 p.m.
8. All welding procedures are to be in compliance with all COSA and Airport guidelines and OSHA 29 CFR 1926.102(b), .350-.354, 406(c)
9. All arc welding machines are to be approved by Aviation Fire Department/Safety for use prior to welding.
10. Welding or torch cutting under the direct supervision and by approval of Concession Manager.
11. A welding permit must be completed. See Concession Manager for copy.
12. Comply with the Airport's Fire Marshal's regulations and notify Concession Manager prior to welding or torch
    cutting.

3.14 Barricades

All areas of construction must have a barricade erected prior to the start of construction.

The following criteria must be followed:

1. Height of barricade will extend to the existing ceiling height.
2. Barricade must be painted neutral white with black base molding applied to the concourse side.
3. Barricade must have dust cover consisting of ripstop visqueen.
4. Barricade door to be located towards the side not in the center.
5. Barricade not to project out more than 3 feet past the bulkhead.
6. Barricade side return panels are to be 45 degree angles to aid passenger flow.
7. Barricade cannot be bolted, screwed, glued, or shot into any finished floor. Floor protection required.
8. Barricade must be secured to prevent tipping over or shifting during construction.
9. Barricade is subject to City approval; with TSA approval contingent upon public activity.
10. All barricade removal to take place at night when the construction status has been approved by Concession Manager and Aviation Planning and Development.

Barricades may have signage or graphics approved by the City installed on them. These graphics will be mounted in such a way as not to permanently adhere to the barricade wall. The Concessionaire Contractor is responsible for any damage to the graphics as a result of careless construction practices.

All barricades must have self-closing hinges and be kept closed at all times and locked during non- working hours. All tools or equipment remaining in the concession space after working hours must be stored in a locking job or gang box. It will be the Contractor's responsibility to maintain the barricades both functionally and aesthetically. The Contractor will be responsible to legally dispose of the barricade upon completion of the concession build out.

Concession Division, Construction and Development and Security will approve all barricades construction and maintenance.

3.15 Parking

All designated parking for contractors vehicles, contractor employees vehicles and delivery trucks will be provided

at the Pre-Construction meeting.

3.16 Trash and Debris Removal

The space is to be kept clean at all times, trash accumulation is to be kept to a minimum. A tarp covered dumpster will be allowed on the airside at a location provided by Airport Operations and Airport Security, and the Contractor is responsible for the removal of all trash from the airport property at their expense. Contractor must insure that all debris fit properly into debris bins; no debris may be permitted to lean over the profile of the container. It is imperative that no sharp edges, screws, wire etc. project out in such a way as to injure others or damage common areas. All debris must be stored in the construction area; no debris may be placed anywhere else unless permission is given.

Contractor will be responsible for any debris, dirt, grease, dust left in the common areas.
Contractor will immediately clean any debris from the common areas and subject to special cleaning fee, if deemed appropriate by the City representative.

3.17 Floor and Roof Penetrations

Approval for any core drilling must be obtained prior to commencing work. Submit the request with the appropriate background of need to Concession Manager and Aviation Construction and Development.

Floor and wall penetrations must be sealed and dampened to maintain occupancy separations where required.

All floor penetrations must maintain the two (2) hour fire rating of the slab and require X-ray confirmation prior to commencing work. A qualified X-ray contractor hired at contractor's expense shall perform all X-rays. Likewise all fireproofing within the Concessionaire's Space must be restored to its original thickness, properly sealed with expanding foam and filled as applicable per building code(s).

3.17.1 Roofing

Currently, roof penetrations are not allowed except for kitchen uses. There are three (3) Roof penetrations within a provided curb to accommodate the concessions within the food court area. Cutting and patching must be performed by only City's authorized roofing contractor to ensure warranty:

Terminal A - American Roofing
Terminal B - Fifth Wall Roofing

The Contractor is to contact Concession Manager for additional information.

3.18 Close-Out Requirements

Concession Manager, Aviation Planning and Development and the Contractor will walk the space a minimum of 2 weeks prior to opening, to determine last remaining items to address. This punch list will be monitored until completed. Punch items to be completed in 30 days.

All such construction shall be completed free and clear of all liens, encumbrances and security instruments. If any mechanic's, material means' or other lien is filed against the Premises, the Terminal, the Airport, the City or any interest in this Lease Agreement as a result of any work or act of Concessionaire and/or Contractor, Concessionaire shall fully and completely discharge the lien and have it released from record by payment or posting a bond within 20 days after the filing and subject to consequences as defined in the Lease Agreement.
Prior to opening, Contractor shall also deliver to Concession Manager a copy of the Certificate of Occupancy with respect to the premises.
Within 60 days after opening for business in the Premises, Contractor shall:

1) from the contractor(s) a written warranty of all materials and workmanship for a period of one (1) year effective from the date of beneficial occupancy of the Premises. Contractor(s) shall be required by Contractor in its construction contract to repair and/or replace all defective materials, equipment and workmanship at no cost to the City, or the Concessionaire occupying the Premises;

2) all required manufacturers' guarantees, maintenance manuals and other pertinent documents; preventative maintenance program details and schedule.

3) one (1) set of "as-built" drawings (and preferably specifications) and Computer Aided Drafting and Design (CADD) drawings, on CD duly certified by a Texas registered architect or registered engineer, no later than 60 days after opening for business in the Premises,

4) executed copies of all mechanics' lien waivers and/or releases or other lien waivers and/or releases on account of contractors work, notarized and unconditional, in such form as COSA shall have reasonable approved along with an architects certification that the Premises have been constructed in accordance with the approved Final Drawings and are fully complete in accordance with all of Such requirements specified or reference herein.

5) statements of the total construction costs incurred by Contractor which is certified by a responsible officer of Contractor as correct together with copies of all supporting documentation required by the City under the Agreement with the city including copies of paid invoices.

6) certified construction cost reports

(7) All SAT security badges

3.19 Construction Deposit

A construction deposit of $5,000.00 will be required from Concessionaire's general contractor for each space being constructed and shall not be released by COSA until after satisfactory completion of;

(i) all requirements of Exhibit B attached to the Agreement and all the documents referenced by Exhibit B and this Contractor's Manual

(ii) approval by the COSA's on-site construction supervision personnel or their designee, specifying that all of Contractor's work has been completed and accepted by COSA; and

(iii) receipt by COSA of all construction related close-out project documentation required by the Agreement, this Exhibit B, and the CPA process or otherwise required by COSA.

The deposit shall be in the form of a cashier's check made payable to the "City of San Antonio" and due on the day of the pre-construction meeting.
City of San Antonio (COSA) will retain the security deposit until all items are completed and submitted as required by the lease in the "closing documents".

4.1 Close Out Documents

The Concessionaire Contractor must provide the following information to the On-Site Concessionaire Coordinator within ten business days from the opening of the location. Return of the security deposit will be conditioned upon receipt of the following:

1. As Builts of the Concession Space – CADD CD
2. Certified Construction Cost Reports
3. Certificate of Occupancy (within 30 Days)
4. Lien Waivers
5. Completed Aviation Punch list
6. All SAT Security Badges Returned
7. Texas Department of Licensing and Regulation (TDLR) inspection

4.2 General Health & Safety

The Concessionaire Contractor will at all times conform and comply with all local, state and Federal agencies including but not limited to: OSHA, Federal Aviation Administration, City of San Antonio, and Texas Department of Labor. At no time will any construction related activity jeopardize the safety of any employee, passenger, patron, etc. of San Antonio International Airport. In the event that multiple agencies claim jurisdiction, the most stringent regulations will take precedent.

4.3 On-Site Health & Safety Station
The Concessionaire Contractor will establish and maintain an On-Site Health & Safety Station. This station will be mounted on a plywood backing affixed to the barricade framing. This Station will consist of the following:

1. First Aid Kit
2. Eye Wash Station
3. ABC Fire Extinguisher
4. Emergency Phone Number List
5. Contractor Health & Safety Plan (includes MSDS)
6. Terminal Floor plan showing nearest fire exits.

4.5 Personal Protective Equipment
Concessionaire Contractor to provide all personal protective equipment in accordance with OSHA 29 CFR 1926.95, 96,.100,.1O1,.102,.103,.104,.105

4.6 Welding

In order to be able to field weld, the following criteria must be met and maintained for the duration of all welding procedures:

1. Submit to the Concessions Division "Welding Request Notice" at least three days in advanced.
2. Submit to Concessions Division all Welding Certificates and Licenses.
3. Submit Fire Sprinkler Shut Down Notice (if applicable) to Concessions Division at least **five** days in advance.
4. Provide all fire watches required and all fire extinguishers and fire blankets.
5. Use and maintain all required personal protective equipment
6. Maintain a firewatch for the duration of the welding
7. Properly secure all gas bottles. Extra gas bottles are not to be stored inside the Terminal. All gas bottle storage, handling, transporting and usage must comply with OSHA 29 CFR 1926.3 50
S. No welding in public view (storefronts included) may take place from 5am till 11 p.m.
9. All welding procedures are to be in compliance with all City and Airport guidelines and OSHA 29 CFR 1926.102(b), .350-.354,.406(c)
10. All arc welding machines are to be approved for use prior to welding.
11. Notify Airport Communications, Airport Operations and Airport Fire Rescue Captain prior to starting work.

4.7 Fire Sprinkler Shut Downs *(if* Applicable)

Due to the large number of agencies that need to be notified of a sprinkler shut down; submit to the Concession Manager a Fire Sprinkler Shut down Notification at least three (3) business days in advance. Contractor is responsible for all fire watches and emergency equipment (fire extinguishers, fire blankets, etc). The Contractor will be charged for any cost associated with a Fire Sprinkler Shut Down as determined by City of San Antonio (COSA).

If the existing Fire Sprinkler System is modified, a hydrostatic test may be required prior to energizing the system. The Concessionaire Contractor will be informed of the hydrostatic test as required.

4.8 Mechanical/Electrical Shutdowns

In the event that the Contractor requires a Mechanical/Electrical Shutdown, submit a Mechanical Shutdown Notice form to the Concession Manager at least three (3) business days in advance. If the Contractor needs to access any Operations level Mechanical Room, all workers must have security badges and escort by the Airport Police or an Aviation Department representative.

4.9 Drug Free Work Place

Airport is a drug free work place. Alcohol is also prohibited while working.

4.10 Smoking

There is no smoking anywhere inside the Terminals or on the AOA. Designated smoking areas outside the concourse are labeled as such. Anyone violating this rule will be removed form the premises and replaced. **(See http://www.sanantonio.gov/Aviation/imagelibrary/uploadedfiles/upload-217201130045pm.pdf)**

4.11 Escorts

When an escort is required, the escort is responsible for any and all violations that are caused by those with the escort. **Those assigned to an escort must remain with the escort at all times.** All escorts will be arranged through the On Site Concessionaire Coordinator.

4.12 Gas Powered Equipment

No gas, diesel or propane powered equipment will be permitted,

4.13 Lasers

All lasers are to be operated in a safe manner by trained tradesmen. At no time will a laser be used in the common areas or in such a manner as the laser emits out to the common area. All signage and personal protective equipment will be required as OSHA 29 CFR 1926.1 02(b)(2)

4.14 Powder Actuated Tools

All powder or explosive charge activated tools are to be operated by persons that are properly and currently trained and qualified to operate that particular tool. All tools are to be used and handled as per OSHA 29 CFR 1926.302(e)

Pre-Construction Meeting Agenda

Project:
Name of Contractor:
Project Manager:
On-site Superintendent:
Date:

1. **Introduction**
2. **Pre-Construction Requirements**
    a. **Insurance certificate**
    b. **Security Deposit from GC ($5,000 cashiers check payable to City of San Antonio.)**
    c. **Shared Services check payable to _____**
    d. **Performance & Payment Bond (for total amount of construction contract costs for: fixed improvements: naming the City as additional insured.**
    e. **Emergency Contact List/Medical Locations.**
    f. **List of Sub Contractors.**
    g. **Contractors Project Schedule:**
    h. **Material Safety Data Sheets (MSDS) for products used.**
    i. **Electrical, Plumbing & HVAC Licenses.**
    j. **Copy of Building Permit.**
3. **Security, Badging and Safety Procedures.**
    a. **Badging and Safety Access Requirements.**
    b. **Storage of Tools & Equipment.**
    c. **Construction Barricade, Keys & locks.**
    d. **Delivery Procedures.**
    e. **Contractor/Sub-contractor Parking.**
    f. **Dumpster/location.**
    g. **Use of PPE, Ladder Safety, Notify Fac. Maintenance of Lock out tag out.**
4. **Interruptions to Existing Facilities.**
    a. **Debris Removal.**
    b. **Welding(permit required)**
    c. **Dust, Noise, Odor control.**
    d. **Hours of Operation.**
5. **Progress Reports Coordination of Shutdowns & Misc. items.**
    a. **Progress Reports**
    b. **Coordination of Shutdown & Misc. items.**
    c. **Written Progress Reports.**
6. **Punch List**
    a. **Scheduling – Minimum 2 Week before turnover.**
    b. **Space to be free and clear of construction activity and equipment allowing for full access.**
7. **Close-out Documents.**
    a. **Lien wavers, proof of payment.**
    b. **Cost Certification Sheet.**
    c. **Deposit return.**
8. **Drug Free Workplace – No Smoking Ordinance.**
9. **Questions?**

III. SAN ANTONIO INTERNATIONAL AIPORT CONCESSIONS SIGN MANUAL

CHAPTER CONTENTS

1.0 Purpose and Scope

- 1.1 Scope
- 1.2 Applicability
- 1.3 Procedure
- 1.4 City Concessionaire Work

2.0 General Rules

3.0 Promotional Signs

4.0 Miscellaneous Signs

1. PURPOSE AND SCOPE

1.1 SCOPE

This signage and graphic design standard incorporates the latest revisions of Operating Instructions to provide Tenants with the criteria and standards for signage

1.2 APPLICABILITY

All Tenants who desire to erect signage of any description on property leased from SAAS will be bound by this signage and graphic design standard.

1.3 PROCEDURE

All requests for permanent signage will be submitted to Concession's Manager as a Tenant Improvement Project. Sketches and graphic designs must accompany each request.
The precise typeface must be accurately represented, to scale, on elevation drawings of the surface on which the proposed signage is to be installed. Exterior elevations must show the entire face of the lease space/building/. Signage must remain within predetermined boundaries. All power requirements and installation details must be included.
Shop drawings must be submitted illustrating: sign height placement, signage height, thickness, mounting applications, colors, and overall width.
Request for promotional signs and displays will be submitted to the Concession's Manager using the attached form. This form must be submitted at least thirty (30) days prior to the requested date for the display

2. GENERAL RULES

2.1 Except for locations where company name or logo may be displayed, all text Airport Standards

2.2 All Tenant (including sub-tenant) signs must be of an informative nature. "For Sale," "For Lease," or "For Rent" signs are not permitted.

2.3 Signs are not permitted on roof top or to be attached to structural room members

2.4 All signs shall be surface mounted or recessed to a flush condition. Mounting conditions and heights within the Terminal may vary. Appearance of sign mounting locations conditions cannot be altered. Signs painted on any surface of a building are not permitted.

2.5 Flashing, blinking, neon signs are not permitted

2.6 Altering of portals is not permitted

2.7 Portable signs is not permitted

2.8 Signs on doors and windows are not authorized except as permitted by this policy

2.9 Exposed mounting devices, crossovers, conduits or raceways are not permitted

2.10 All signs must meet safety standards. All illuminated signs must bear the Underwriters Laboratories, Inc. label and meet all local code requirements

2.11 Signs of a promotional nature are not permitted except as permitted by this policy

2.12 Handwritten signs are not permitted

2.13 Signs not covered in this policy are not permitted

3. PROMOTIONAL SIGNS

3.1 Promotional signs are defined as any sign, banner, flag, or display of any size, configuration, color or method of attachment or installation within the Tenant's leasehold, which is intended to promote a specific product or service for a limited period of time.

3.2 Promotional signs requiring electrical power must be submitted to Concession's Manager and Construction and Development division for review and approval 30 days prior to installation. Substitution or replacement in kind of existing previously approved signs requiring electrical power must be approved by the Concession's Manager and Construction and Development division to installation.

3.3 All promotional signs intended for display for 30 calendar days or less, must be approved by the Concession's Manager prior to installation. The approval will be for a specified length of time. The promotional sign must be removed at the end of the period of approved display, all installation devices and fasteners removed, and the surface(s) on which installation occurred restored to their condition prior to the installation. At the discretion of the Concessions Division, up to two (2) extensions may be granted up to a maximum display period of ninety (90) calendar days.

3.3 Promotional signage must be maintained in good condition for the duration of display. Any such signage which is not maintained in good condition by the Tenant will be removed by SAAS without prior notice to the Tenant.

3.4 Promotional signs must not be at variance with provisions of SAAS advertising concession agreements or of any other provisions of this Tenant Improvement Manual.

4. MISCELLANEOUS SIGNS

4.1 Signage on personnel doors within the Terminals must be approved by the SAAS. Personnel doors may be marked as to the function (i.e., "Lost and Found"). These signs shall be installed per ADA requirement Size, color and font to be provided at a later date.

4.2 Use of Pedestal signs must be approved by Concession's division. If approved pedestals signs must remain within the leasing boundaries. Handwritten signs are prohibited.

SAN ANTONIO
AIRPORT SYSTEM

CONCEPT PROPOSAL INFORMATION SHEET

GENERAL INFORMATION

Date: _____

Tenant: _____

Tenant Representative: _____

Address: _____

Phone Number: _____

Fax Number: _____

Email: _____

SIGNAGE AND GRAPHICS

Promotional Materials and Temporary Displays: (attaching drawings and examples is encouraged) Location: _____

Dates of Display: _____

Description of Display: _____

Description of Promotional Material Content (Color, Size, Etc.) _____

_____

_____

_____

Permanent Signage: (attach drawings and specifications showing materials and locations)

Reason and Justification for Signage:

_____

_____

IV STRUCTURED CABLING INFRASTRUCTURE GUIDELINES

City of San Antonio

Structured Cabling Infrastructure Guideline

For Facility Construction or Renovations

Version 1.0

TABLE OF CONTENTS

PART 1 - DOCUMENT PURPOSE 5

PART 2 - DOCUMENT HISTORY 5

PART 3 - INDUSTRY STANDARDS 6

PART 4 - CONTRACTOR QUALIFICATIONS 7

PART 5 - WARRANTY ON PARTS AND LABOR. 7

PART 6 - NOMENCLATURE 7

PART 7 - CITY INFRASTRUCTURE STANDARDS 7

7.01 Telecommunications Spaces 7

A. Main Distribution Frame (MDF) 8

1. Description 8
2. Architectural Requirements 8
3. HVAC Requirements 10
4. Lighting Requirements 10
5. Power Requirements 10
6. Equipment Cabinets / Racks and Cable Management Requirements 11

B. Intermediate Distribution Frame (IDF) 12

1. Description 12
2. Architectural Requirements 12
3. HVAC Requirements 14
4. Lighting Requirements 14
5. Power Requirements 15
6. Equipment Cabinets / Racks and Cable Management Requirements 16

7.02 Entrance Pathways and Conduits 16

A. Design Principles 16

B. Service Provider Conduits 17

C. Campus Serving Conduits 17

D. Building Entrance for Large Campus 18
7.03 Cable Management In Telecommunications Spaces 18
A. Equipment Cabinets / Equipment Racks 18
B. Overhead Cable Management 18
7.04 Cable Support in Pathways 19
A. Main Cable Pathway 19
B. Sleeves and Penetrations 19
C. Workstation Rough-ins and local power (Typ.) 20
7.05 Backbone Cabling 21
A. Service Provider Demarc 21
B. Inter-building Backbone Cabling (Campus) 22
1. Permanent Structures 22
a. Copper 22
b. Fiber 22
C. Intra-building Backbone Cabling 22
1. Copper 22
2. Fiber 23
7.06 Horizontal Cabling 23
A. Workstation Cable 23
B. Workstation Configurations 23
1. Office Workstation 23
2. Ceiling-Mounted Projector Outlet 24
3. Audio/Visual Control System (Control Panel) 24
4. Wireless Access Point Outlet 24
5. IP Camera Outlet 25
C. Patch Cables 25
7.07 Grounding 27
7.08 Labeling 27

7.09 Testing 29
7.10 As-Built Documentation 29
PART 8 - SUMMARY OF STANDARDS 29
8.01 Summary 29
PART 9 - EXHIBITS 30
EXHIBIT 1 - ACCEPTABLE MANUFACTURERS / PRODUCTS 31
EXHIBIT 2 – TYPICAL DETAILS 40

PART 1 - DOCUMENT PURPOSE

1.01 The City of San Antonio Structured Cabling Infrastructure Standard is a guideline for structured cabling infrastructure and the associated spaces to be applied by the design team for new or renovated facilities. Information herein is applicable to the Technology Consultant, Architect, MEP, and contractors, and shall be taken into account for each project by all team members.

A. The standards set forth parameters for the technical system in addition to the site and building requirements to facilitate a properly-installed standards-compliant structured cable system, organized as follows;

1. Telecommunications Spaces; Architectural, HVAC, Power, Entrance Pathways and Conduits

2. System Requirements; Cable Management in Telecommunications Spaces, Cable Support in Pathways, Backbone Cabling, Horizontal Cabling, Grounding, Labeling, Testing, and As-Built Documentation.

3. Telecommunications Diagrams

1.02 The standard addresses infrastructure for typical buildings and is not intended for the design of data centers or specialty facilities, of which should be considered on a case-by-case basis.

1.03 Designers shall not deviate from this standard without explicit written approval from the City of San Antonio Information Technology Services Department.

1.04 Any deviations shall immediately be brought to the attention of the owner's representative in writing for resolution.

1.05 Where specific product brands are mentioned, an equivalent will be considered following an official submission of product literature and written acceptance by the City of San Antonio Information Technology Services Department.

1.06 Where means, methods, and best practices are mentioned, contractor shall follow the manufacturers' and owner's requirements, industry standards, or code, whichever is most stringent.

1.07 Basic contractor qualifications are set forth, but may be made more stringent as applicable to each project based upon size and scope.

1.08 A Division 27 specification and T-Series drawings for the Structured Cabling System shall be commissioned and issued by the Architect during the design phases for each facility or project.

PART 2 - DOCUMENT HISTORY

2.01 This document supersedes all previous standards which have been fully reevaluated and described herein by the City of San Antonio Information Technology Services Department.

2.02 The contents of the standards were derived by the assembly and input from the City of San Antonio Information Technology Services Department.

PART 3 - INDUSTRY STANDARDS

3.01 The following industry standards shall be adhered to unless specifically directed otherwise by the City of San Antonio Information technology Services Department. The list is not all-inclusive and does not alleviate compliance with the latest applicable standards, codes, and best practices:

A. TIA-568-C.0 Generic Telecommunications Cabling for Customer Premises

B. TIA-568-C.1 Commercial Building Telecommunication Cabling Standards – Part 1 General Requirements (2008)

C. TIA-568-C.2 Balanced Twisted-Pair Telecommunications Cabling and Components Standard (2009)

D. TIA-568-C.3 Optical Fiber Cabling Components Standard (2009)

E. TIA-569-B Commercial Building Standard for Telecommunications Pathways and Spaces - (October 2004)

F. TIA-598-C Optical Fiber Cable Color Coding - (January 2005)

G. TIA/EIA-606-B Administration Standard for Commercial Telecommunications Infrastructure - (May 2012)

H. ANSI J-STD-607-B Commercial Building Grounding and Bonding Requirements for Telecommunications - (October 2011)

I. TIA-758-A Customer-Owned Outside Plant Telecommunications Infrastructure Standard - (August 2004)

J. TIA-526-7 Measurement of Optical Power Loss of Installed Single-Mode Fiber Cable Plant – OFSTP-7 - (February 2002)

K. TIA-526-14-A Optical Power Loss Measurements of Installed Multimode Fiber Cable Plant – OFSTP-14 - (August 1998)

L. AIA

M. Local Building Code

N. NEC

O. ISO

P. ANSI

Q. FCC

R. UL

S. OSHA

T. NFPA

U. NEMA

PART 4 - CONTRACTOR QUALIFICATIONS

4.01 Contractor and staff shall be a current authorized Panduit Certified Installers and certified by Panduit to provide and furnish a 20-year performance warranty for structured cabling and connectivity components.

4.02 Contractor and staff shall possess relevant past-experience and references for a minimum of (5) projects of similar size and scope to that of the City of San Antonio.

4.03 Contractor's Project Manager shall be a RCDD in good standing and shall provide Certificate.

4.04 Contractor shall have a local office within a 75-mile radius of the project site

4.05 Sub-contractors to the primary structured cabling contractor shall meet the same requirements for the primary structured cabling contractor as identified above.

PART 5 - WARRANTY ON PARTS AND LABOR.

5.01 The contractor shall furnish a 20-year performance warranty from Panduit for the structured cabling and connectivity components.

5.02 All labor and workmanship shall carry a minimum warranty period of (1) year from the date of final system acceptance.

5.03 Defects in material or workmanship appearing within this period of time, shall be promptly repaired without cost to the City of San Antonio.

PART 6 - NOMENCLATURE

6.01 Main Distribution Frame (MDF) – An environmentally controlled centralized architectural space for housing telecommunications equipment that usually serves as the demarcation point for service providers, and houses the backbone terminations for cross-connection and distribution to Intermediate Distribution Frames.

6.02 Intermediate Distribution Frames (IDF) – An environmentally controlled architectural space for housing telecommunications equipment and backbone terminations for cross-connection and distribution to the MDF and end-user workstations.

PART 7 - CITY INFRASTRUCTURE STANDARDS

7.01 Telecommunications Spaces

A. Main Distribution Frame (MDF)

1. Description

a. The MDF is a telecommunications space that serves a building or multi-building facility or campus. There is only (1) on each campus.

b. The MDF houses the entrance conduits, terminations, and cross connections for all incoming inter-building backbone cabling from the IDFs in other buildings on the campus and the intra-building backbone cabling from the IDFs in the building in which it resides, and cross-connects to user workstations.

c. Wall and floor space shall be reserved for service provider demarcation equipment and incoming infrastructure terminations.

d. Campus distribution network equipment, servers, and other centralized telecommunications related equipment will reside in the MDF.

e. The MDF may share space with other systems such as security panels, paging systems, and CATV cabling. Space allocation for other systems shall be coordinated with the applicable disciplines after approval from the City of San Antonio Information Technology Service Department. All coordination shall be completed prior to installation.

f. Fire alarm panels and building control panels shall not be located inside the MDF. Space allocation for these systems needs to occur outside of the MDF.

g. The MDF shall not be used for storage, serve as a mechanical or electrical distribution space, nor shall it have within its space main electrical feeds, electrical switch gear, transformers, and water or sprinkler main lines.

h. The layout of cabinets, equipment racks, wall fields, and cable management shall be as indicated on the attached diagrams.

2. Architectural Requirements

a. The MDF shall be a minimum of 150 square feet with minimum clear lineal walls of at least 10 feet by 15 feet. The size of the MDF shall be coordinated with and approved by the City of San Antonio Information Technology Services Department during the design.

b. All walls inside the MDF shall go to deck. When walls are drywall they shall be double layered drywall on both sides to help reduce the risk of unauthorized entry.

c. The MDF Room shall be centrally located.

d. The floor finish shall be sealed bare concrete or VCT.

e. The MDF shall not contain windows.

f. The MDF shall not be located adjacent to or below restrooms or other water-based facilities, or sources of EMI and mechanical vibration.

g. All walls shall be covered with 4-feet x 8-feet x ¾-inch AC Grade Void Free Fire Retardant Plywood, aligned vertically starting at 12 inches above the finished floor. The plywood shall be installed with the "A" grade side exposed and the "C" grade side against the building or structure. The plywood shall be painted with two coats of fire retardant paint and one stamp from each sheet shall be masked during the painting and uncovered after the paint has dried so the fire rated plywood stamps are visible for inspection.

h. The minimum ceiling height shall be 9-feet above finished floor with the following preferences of finishes.

   1) No ceiling is the preferred finish

   2) Hard ceiling is acceptable if leaving open to structure is not possible.

   3) The last alternative is a lift-out ceiling. If a lift-out ceiling tile is required this shall be coordinated and approved by the City of San Antonio Information Technology Services Department during the design process. If this option is approved it is recommended the ceiling height inside the MDF room be higher than the ceiling height in the corridor outside the MDF so the cables entering into the MDF do not have to pass through the lift-out ceiling inside the MDF room.

i. Entry to the space shall be through a minimum 36-inch by 80-inch clear door opening that swings outward. Door shall be solid core or steel and shall not have any windows. The door shall securely lock and access shall only be by City of San Antonio Information Technology Services Department-approved personnel. The door shall open to an interior hallway or space, it is not recommended the door open to the exterior of the building.

j. The MDF door shall be equipped with a minimum of a City of San Antonio Information Technology Services Department approved cipher lock. When an access control security system is available, the entrance to the MDF shall be equipped with a card reader and electrified door hardware.

k. Fire suppression for the MDF shall be determined by the specific code requirements for the fire protection scheme of the overall building. If a fire suppression system is designed, it shall be

designed to avoid running distribution over the MDF equipment cabinets, racks and equipment.

3. HVAC Requirements

   a. The MDF shall be serviced by a dedicated unit that is part of the building's main system and be equipped with a Split DX system through the wall above the door which cools only when the building HVAC is inadequate or not running. The unit shall maintain a constant 24/7 cooled environment between 68° and 77° F with relative humidity of 40% - 55%.

   b. Changes in temperature and humidity shall be kept to around 1 percent.

   c. The minimum HVAC load shall be designed to displace 12KW of power, or 3.5 Tons, and shall be coordinated with the City of San Antonio Information Technology Services Department during the design and designed to load if the known load is greater at the time of design.

   d. It is recommended the MDF maintain the stated temperature and humidity in the event of building power outages or primary HVAC system failure.

   e. Air delivery shall be aligned in the front of the equipment rows and returns at the rear of the equipment rows when possible.

   f. HVAC sensors and controls shall be located in the MDF at 5-ft AFF.

   g. A hard-wired wall mounted thermostat shall be located inside the MDF Room.

   h. HVAC systems shall be alarmed for power loss, high and low temperature, high and low humidity, smoke detection, compression failures and water flooding.

   i. A simplex data drop shall be installed within 12 inches of the unit so it can be incorporated into the Building Automation System (BAS).

4. Lighting Requirements

   a. Florescent light fixtures shall be at least 24 inches above the top of the highest cabinet, rack or cable runway (approximately 84 inches), 36 inches is recommended.

   b. Lighting shall be a minimum of 50 foot candles at 2 feet above the floor in the entire space.

   c. The MDF shall be equipped with emergency lighting to keep the space lit during power outages.

5. Power Requirements

a. All electrical service outlets shall be labeled with the associated panel and circuit information.

b. Power shall be in two categories: dedicated and convenience.

c. Dedicated

1) The MDF shall be equipped with a minimum of (2) dedicated 208 VAC 20 amp electrical circuits terminated in separate J-boxes and (1) dedicated 120 VAC 20 Amp circuit mounted above each equipment cabinet or rack.

a) The (2) 208 VAC J-boxes shall be mounted to a uni-strut above the equipment cabinets or racks and shall be provided with a 7-foot "SO Type" cord with a female NEMA L6-20R receptacle on the end.

b) The (1) 120 VAC J-box shall be mounted to a uni-strut above the equipment cabinets or racks and shall be provided with a 7-foot "SO Type" cord with a female NEMA 5-20R receptacle on the end.

c) The originating electrical panel shall be properly sized for the loads calculated and shall be located in the nearest Electrical Room.

2) Additional power circuits to be allocated to security, paging CATV, and service provider equipment shall be considered and coordinated at the time of building design.

3) Power distribution to the cabinets shall be achieved by installing rack mounted PDUs.

d. Convenience

1) The MDF shall be equipped with 120 volt 20 Amp duplex NEMA 5-20R receptacles, with maximum (3) receptacles on each circuit. The originating electrical panel shall be equipped with a 20 Amp breaker per circuit.

2) A duplex receptacle shall be spaced at least 1 foot from an adjacent wall and every 6 feet thereafter. A minimum of (1) duplex receptacle shall be placed in each wall and be flush mounted to the finished wall surface at 18 inches above finished floor.

6. Equipment Cabinets / Racks and Cable Management Requirements

a. The MDF shall be equipped with a minimum (2) equipment cabinets or equipment racks. Coordination with and approval by City of San

Antonio Information Technology Services Department during the design is required to determine with equipment cabinets or equipment racks shall be utilized.

b. The MDF shall be equipped with cable runway encircling the room at 84-86 inches above the finished floor, and crossing the room above the equipment cabinets or racks (1) time.

1) Cable runway shall not be secured to the top of the equipment cabinets.

2) A vertical section of cable runway shall be attached to the wall board to manage backbone and service provider cables as they transition from the entrance conduits to the overhead cable runway.

B. Intermediate Distribution Frame (IDF)

1. Description

a. An IDF is a telecommunications space that resides in each building that requires more than a single telecommunications space from which to terminate horizontal workstation cables. There may be multiple IDFs in each building as required to maintain horizontal cable distances of 295 feet for the permanent link.

b. An IDF houses the terminations and cross connections for the intra or inter-building cabling from the MDF and the horizontal user workstation cabling in the area of the building that it serves.

c. Building workstation access network equipment will reside in the IDF.

d. The IDF may share space with other systems such as security panels and paging systems. Space allocation for other systems shall be coordinated with the applicable disciplines.

e. Fire alarm panels and building control panels shall not be located inside the IDF. Space allocation for these systems needs to occur outside of the IDF.

f. The IDF shall not be used for storage, serve as a mechanical or electrical distribution space, nor shall it have within its space main electrical feeds, electrical switch gear, transformers, water or main sprinkler lines.

g. The layout of cabinets, equipment racks, wall fields, and cable management shall be as indicated on the attached diagrams.

2. Architectural Requirements

a. The IDF shall be a minimum of 100 square feet with minimum clear lineal wall lengths of at least 10 feet by 10 feet.

b. All walls shall go to deck. When walls are drywall they shall be double layered drywall on both sides to help reduce the risk of unauthorized entry.

c. The floor finish shall be sealed bare concrete or VCT.

d. The IDF shall not contain windows.

e. IDFs shall be arranged in a stacked formation in multi-story buildings, and not be located next to or below restrooms or other water-based facilities, or sources of EMI and mechanical vibration.

f. All walls shall be covered with 4-feet x 8-feet x ¾-inch AC Grade Void Free Fire Retardant Plywood, aligned vertically starting at 12 inches above the finished floor. The plywood shall be installed with the "A" grade side exposed and the "C" grade side against the building or structure. The plywood shall be painted with two coats of fire retardant paint and one stamp from each sheet shall be masked during the painting and uncovered after the paint has dried so the fire rated plywood stamps are visible for inspection.

g. The minimum ceiling height shall be 9-feet above finished floor with the following preferences of finishes.

   1) No ceiling is the preferred finish

   2) Hard ceiling is acceptable if leaving open to structure is not possible.

   3) The last alternative is a lift-out ceiling. If a lift-out ceiling tile is required this shall be coordinated and approved by the City of San Antonio Information Technology Services Department during the design process. If this option is approved it is recommended the ceiling height inside the MDF room be higher than the ceiling height in the corridor outside the MDF so the cables entering into the MDF do not have to pass through the lift-out ceiling inside the MDF room.

h. Entry to the space shall be through a minimum 36-inch by 80-inch clear door opening that swings outward. Door shall be solid core or steel and shall not have any windows. The door shall securely lock and access shall only be by City of San Antonio Information Technology Services Department-approved personnel. The door shall open to an interior hallway or space, it is not recommended the door open to the exterior of the building.

i. The IDF door shall be equipped with a minimum of a City of San Antonio Information Technology Services Department approved cipher lock. When an access control security system is available, the entrance to the IDF shall be equipped with a card reader and electrified door hardware.

j. Fire suppression for the IDF shall be determined by the specific code requirements for the fire protection scheme of the overall building. If a fire suppression system is designed, it shall be designed to avoid running distribution over the IDF equipment cabinets, racks and equipment.

3. HVAC Requirements

a. The IDF shall be serviced by a dedicated unit that is part of the building's main system and be equipped with Split DX system through the wall above the door which cools only when the building HVAC is inadequate or not running. The unit shall maintain a constant 24/7 cooled environment between 68° and 77° F with relative humidity of 40% - 55%.

b. Changes in temperature and humidity shall be kept to around 1 percent.

c. The minimum HVAC load shall be designed to displace 4KW of power, or 1 Ton, and shall be coordinate with the City of San Antonio Information technology Services Department and designed to load if the load is greater and known at the time of design.

d. It is recommended that the IDF maintain the stated temperature and humidity in the event of building power outages or primary HVAC system failure.

e. Air delivery shall be aligned in the front of the equipment rows and returns at the rear of the equipment rows.

f. HVAC sensors and controls shall be located in the IDF at 5-ft AFF.

g. A hard-wired wall mounted thermostat shall be located inside the IDF Room.

h. HVAC systems shall be alarmed for power loss, high and low temperature, high and low humidity, smoke detection, compression failures and water flooding.

i. A simplex data drop shall be installed within 12 inches of the unit so it can be incorporated into the Building Automation System (BAS).

4. Lighting Requirements

a. Florescent light fixtures shall be at least 24 inches above the top of the highest cabinet, rack or cable runway, 36 inches is recommended.

b. Lighting shall be a minimum of 50 foot candles at 2 feet above the floor in the entire space.

c. The IDF shall be equipped with emergency lighting to keep the space lit during power outages.

5. Power Requirements

a. All electrical service outlets shall be labeled with the associated panel and circuit information.

b. Power for the IDF shall be in two categories: dedicated and convenience.

c. Dedicated

1) The IDF shall be equipped with a minimum of (2) dedicated 208 VAC 20 amp electrical circuits terminated in separate J-boxes and (1) dedicated 120 VAC 20 Amp circuit mounted above each equipment cabinet or rack.

a) The (2) 208 VAC J-boxes shall be mounted to a uni-strut above the equipment cabinets or racks and shall be provided with a 7-foot "SO Type" cord with a female NEMA L6-20 R receptacle on the end.

b) The (1) 120 VAC J-box shall be mounted to a uni-strut above the equipment cabinets or racks and shall be provided with a 7-foot "SO Type" cord with a female NEMA 5-20 R receptacle on the end.

c) The originating electrical panel shall be properly sized for the loads calculated and shall be located in the nearest Electrical Room.

2) Additional power circuits to be allocated to security, paging, and service provider equipment shall be considered and coordinated at the time of building design.

3) Power distribution to the cabinets shall be achieved by installing rack mounted PDUs.

d. Convenience

1) The IDF shall be equipped with 20 Amp duplex NEMA 5-20R receptacles, with maximum (3) receptacles on each circuit. The originating electrical panel shall be equipped with a 20 Amp breaker per circuit.

2) A duplex receptacle shall be spaced at least 1 foot from an adjacent wall and every 6 feet thereafter. A minimum of (1)

duplex receptacle shall be placed in each wall and be flush mounted to the finished wall surface at 18 inches above finished

6. Equipment Cabinets / Racks and Cable Management Requirements

   a. The IDF shall be equipped with a minimum (2) equipment cabinets or equipment racks. Coordination with and approval by City of San Antonio Information Technology Services Department during the design is required to determine with equipment cabinets or equipment racks shall be utilized.

   b. The IDF shall be equipped with cable runway encircling the room at 84-86 inches above the finished floor, and crossing the room above the equipment cabinets or racks (1) time.

      1) Cable runway shall not attach to the top of the equipment cabinets.

      2) A vertical section of cable runway shall be attached to the wall board to manage backbone and service provider cables as they transition from the entrance conduits to the overhead cable runway.

7.02 Entrance Pathways and Conduits

A. Design Principles

1. Pathways and conduits are described herein with regard to capacity, function, and basic design principles and shall be designed by the MEP in accordance with NEC and EIA/TIA-758, Customer-Owned Outside Plant Telecommunications Cabling.

2. Telecommunications Conduit Systems shall:

   a. Be Schedule 80 when placed under ground.

   b. Contain a minimum of (3) 3-inch 3-Cell Maxcell fabric innerducts inside each conduit. Coordination with and approval by the City of San Antonio Information Services Technology Department is required to determine the exact quantity and size of the Maxcell innerducts inside each conduit.

   c. Contain no more than the equivalent of (2) 90 degree bends between pull boxes.

   d. Maintain a minimum bend radius of 10 times the diameter of the conduit.

   e. Not exceed 40 percent fill ratio.

   f. Be placed at a minimum depth of 36-inches from the top of the conduit to the finished grade with 3-inches of compacted sand above and below the buried conduit and an orange metallic tracer warning

tape stenciled "TELECOMMUNICATIONS" 12-inches below grade throughout the entire pathway.

g. Be interrupted by an adequately sized manhole or pull box at least every 600 feet for sections containing up to (1) 90 degree of bend, and at least every 350 feet for sections with the equivalent of (2) 90 degree bends.

   1) Manholes and pull boxes shall be of adequate depth for conduits to enter from the side of the pull box and not be required to sweep up into the bottom of box.

   2) Manholes shall have a minimum size of 12 feet long 6 feet wide and 7 feet high.

   3) Pull boxes shall be a minimum f 24 inches wide, 48 inches long and 30 inches tall.

   4) All accessories such as racking, grounding and bonding, ladders and ancillary equipment shall be provided

   5) All covers shall be stenciled with "**COSA COMMUNICATIONS**".

   6) Manholes and pull boxes shall be designed to ensure proper construction types and load ratings (i.e., traffic bearing) are observed and utilized based on the location of the pull boxes.

h. Stub up into the MDF and/or IDF at 4-inches above the finished floor, no more than 2-inches from the finished wall and installed parallel to the finished wall.

i. Contain a marked pulling tape with 1800 lbs tension strength, be fitted with bushings, and sealed appropriately at both ends.

B. Service Provider Conduits

1. Minimum of (4) 4-inch conduits shall route underground from the MDF to the edge of the property Right of Way and terminate as required by the service provider(s). Additional conduits shall be added as required.

2. Manholes and pull boxes shall be utilized as required for an ANSI, TIA and BICSI compliant conduit distribution system. The conduit, pull boxes/manholes sizing and construction shall be coordinated with the City of San Antonio Information Technology Service Department and the applicable service provider on a project by project basis.

3. Where the service provider termination location is unidentified at the time of design, the conduits shall route from the MDF to an adequately-sized pull box or manhole at least 30 feet from the building edge.

C. Campus Serving Conduits

1. Minimum of (2) 4-inch conduits shall route underground from the MDF to the IDF on the first floor of each additional building on the campus. Additional conduits shall be added as required if fill capacity exceeds 40 percent.

2. Manholes and pull boxes shall be utilized as required for an ANSI, TIA and BICSI compliant conduit distribution system. The conduit, pull boxes/manholes sizing and construction shall be coordinated with the City of San Antonio Information Technology Service Department and the applicable service provider on a project by project basis.

3. Where only the first building of a campus is being designed, (2) 4-inch conduits for each additional future building shall route from the MDF to an adequately-sized manhole or pull box at least 30 feet from the building edge.

D. Building Entrance for Large Campus

1. For large campuses, the MEP and Structural Engineer shall consider a conduit entrance vault as part of the MDF sub floor.

7.03 Cable Management In Telecommunications Spaces

A. Equipment Cabinets / Equipment Racks

1. Coordination with and approval by City of San Antonio Information Technology Services Department during the design is required to determine with equipment cabinets or equipment racks shall be utilized.

2. Cabinets and racks shall be black aluminum Standard Equipment Cabinets and Racks with EIA 19-inch rails, 84-inch (45 RMU) overall height and rack mount unit markings engraved on the rails.

3. All cabinets and racks shall be equipped with horizontal and vertical cable management as indicated in Exhibit 1.

4. Racks shall be bolted to the concrete floor and to the overhead cable runway utilizing manufacturer-recommended hardware and methods.

B. Overhead Cable Management

1. Overhead Cable Management shall be a Universal Cable Runway made of 3/8" x 1-1/2" x .065" wall rectangular steel tubing with cross members welded at 12-inch intervals.

   a. MDFs shall be provided with a minimum of 18-inch wide Universal Cable Runway.

   b. IDFs shall be provided with a minimum of 12-inch wide Universal Cable Runway.

c. Universal Cable Runway shall encircle the MDF or IDF room at 84-86 inches above the finished floor, and crossing the room above the equipment cabinets or racks (1) time.

d. The appropriate Radius Drop shall be installed over the racks or cabinets to provide the proper support for the cabling leaving the Runway and entering the rack/cabinet.

e. Universal Cable Runway shall be installed utilizing appropriate hardware to support, join, or attach sections to structures, and shall be supported at a minimum of 5 foot intervals.

f. A vertical section of cable runway shall be attached to the wall board to manage backbone and service provider cables as they transition from the entrance conduits to the overhead cable runway.

g. Universal Cable Runway shall not attach to the full sized equipment cabinets.

7.04 Cable Support in Pathways

A. Main Cable Pathway

1. Main cable pathway shall be wire-basket cable tray with the cables exiting the cable tray supported utilizing j-hooks installed a minimum of every 4-5 feet on center. J-hooks shall be installed utilizing appropriate hardware to support, join and attach j-hooks to structures.

2. Cable tray and J-hook sizing and quantity shall be scaled to the application not to exceed 40 percent fill ratio.

3. A separate j-hook shall be provided for each media type:

   a. Backbone Fiber

   b. Backbone Copper

   c. Horizontal Data

   d. Horizontal Wireless

   e. Horizontal Audio/Visual

   f. Horizontal Security

B. Sleeves and Penetrations

1. Sleeves and penetrations are described herein with regard to capacity, function, and basic design principles and shall be designed in accordance with NEC and EIA/TIA-569-B, Commercial Building Standard for Telecommunications Pathways and Spaces.

2. All sleeves shall be equipped with nylon bushings.

3. All sleeves and penetrations shall be properly fire-stopped to meet local code and to return the wall, floor or structure, back to its original rating.

4. Scale the quantity of sleeves to maintain a 40 percent fill ratio in each sleeve.

5. Above MDF and IDFs install minimum of (4) 4-inch EMT sleeves through the partition wall between the MDF and/or IDF overhead space and the main cabling pathway.

6. Between directly aligned vertically stacked MDF and IDFs install minimum of (3) 4" EMT sleeves through the floor of the upper IDF.

7. Between skewed MDF and IDFs on adjacent floors, install minimum of (3) 4" EMT sleeves through the floor of the upper IDF into the accessible ceiling space below and utilize main cabling pathway to route cabling into the IDF or MDF on the lower floor.

C. Workstation Rough-ins and local power (Typ.)

1. At each flush wall-mounted workstation location, install a 4 11/16 inch by 4 11/16 inch by 2-1/8 inch double-gang back box with double-gang mud ring at 18 inches above the finished floor and at appropriate height for wall mounted phones and above-counter and millwork locations.

   a. Install a minimum of (1) 1-inch conduit from the double-gang box to above accessible ceiling in the room where double-gang box is located. If ceiling is not accessible, install conduit to nearest accessible ceiling.

   b. Conduit shall not exceed the 40 percent fill ratio.

   c. Terminate the conduit above accessible ceiling and install nylon bushing and pull string.

      1) Conduit shall be installed in accordance with EIA/TIA-569-B, contain no more than the equivalent of (2) 90 degree bends and /or 98.4 feet between pull boxes, and maintain a bend radius of 6 times the diameter of the conduit.

2. At locations where the workstation outlets cannot be installed flush in the wall, a Panduit Surface Mounted Raceway that is appropriately sized and designed to meet the specific requirements shall be provided.

   a. When power is provided in the surface mounted raceway a dual-channel surface mounted raceway shall be provided to separate the power from the structured cabling.

   b. The use of surface mounted raceway shall only be considered when no option is available to install the workstation outlets flush in the wall and shall be approved by the City of San Antonio Information

Technology Service Department during the design or prior to installation.

3. At floor-mounted workstation locations, install a floor box or poke-thru specifically designed for the application and environment adequately sized to accommodate the quantity of installed horizontal data cables.

   a. Install a minimum of a (1) 1-inch conduit for every (6) cables from the floor box to above accessible ceiling.

   b. Conduit shall not exceed the 40 percent fill ratio.

4. For modular furniture workstations, a rough-in pathway shall be considered and designed according to the furniture type, quantity of cables, and location as required for each furniture system.

   a. The use of power poles shall be considered only on a case-by-case basis.

5. For ceiling-mounted outlets above accessible ceiling such as Wireless Access Points or IP Cameras, no rough-in is required. The data cable will terminate into a surface-mount box secured to the structure above the accessible ceiling.

6. The electrical engineer shall design at a minimum (1) quad NEMA 5-15R receptacle within 12" of each workstation outlet location.

7.05 Backbone Cabling

A. Service Provider Demarc

1. The service provider demarc shall be located inside the MDF when feasible.

   a. For all new construction, the service provider demarc shall be located inside the MDF. The service provider demarc location and requirements shall be coordinated with City of San Antonio Information Technology Services Department.

   b. For renovation projects where the service provider demarc is not currently located inside the MDF but is required to be relocated because of the renovation, the service provider demarc shall be relocated to the MDF. The service provider demarc location and requirements shall be coordinated with City of San Antonio Information Technology Services Department.

   c. For renovation projects where the service provider demarc is not currently located inside the MDF and is not required to be relocated because of the renovation, the service provider demarc shall be extended to the MDF via copper and/or fiber as required. The service provider demarc location and requirements shall be

coordinated with City of San Antonio Information Technology Services Department.

B. Inter-building Backbone Cabling (Campus)

1. Permanent Structures

a. Copper

1) Inter-building Backbone Copper Cabling shall be Category 3 25-pair 24 AWG flooded UTP home run from the MDF to primary IDF in each of the buildings on the campus. Provide a 10-foot service loop at both ends of each cable stored on the wall above or below the cable runway. Provide a 20-foot service loop in each manhole or pull box. Cables shall be secured with Hook-and-loop tie-wraps in the MDF or IDF.

2) Inter-building Backbone Copper Cabling shall terminate on UL-listed Category 3 25-pair 110 IDC in/out lightning protection panels equipped with UL-listed Category 3 5-pin solid state quick-acting protector modules. The secondary side of the panel shall be connected to a Category 3 24-Port RJ-45 rack mounted patch panel.

b. Fiber

1) Inter-building Backbone Fiber Optic Cabling shall be armored indoor/outdoor 48-Strand single mode home run from the MDF to the primary IDF in each of the buildings on the campus and dressed with fan-out kits as required. Provide a 10-foot service loop at both ends of each cable stored on the wall above or below the cable runway. Provide a 20-foot service loop in each manhole or pull box. Cables shall be secured with Hook-and-loop tie-wraps in the MDF or IDF.

2) All fiber optic terminations shall be fusion spliced to factory provided "pig-tail" LC terminated cables.

C. Intra-building Backbone Cabling

1. Copper

a. Intra-building Backbone Copper Cabling shall be Category 3 25-pair plenum rated 24 AWG UTP home run from the MDF to each of the IDFs in the building. Provide a 10-foot service loop at both ends of each cable stored on the wall above or below the cable runway. Cables shall be secured with Hook-and-loop tie-wraps in the MDF or IDF.

b. Intra-building Backbone Copper Cabling shall terminate on a Category 3 24-Port RJ-45 rack mounted patch panel.

2. Fiber

a. Intra-building Backbone Fiber Optic Cabling shall be armored plenum rated 24-Strand single mode from the MDF to each of the IDFs in the building. Provide a 10-foot service loop at both ends of each cable stored on the wall above or below the cable runway. Cables shall be secured with Hook-and-loop tie-wraps in the MDF or IDF and in the cable runway.

b. All fiber optic terminations shall be fusion spliced to factory provided "pig-tail" LC terminated cables.

7.06 Horizontal Cabling

A. Workstation Cable

1. Horizontal Data Cabling shall be Category 6 UTP, minimum factory sweep tested to 350 MHz, plenum rated, installed from the patch panel in the MDF or IDF to the workstation location not to exceed 295 feet for the permanent link. Provide a 10' service loop in the MDF or IDF, and 1-foot of slack at the conduit stub-up above the outlet. Cable bundles shall be secured with Hook-and-loop tie-wraps.

2. At the workstation, each Category 6 cable shall be terminated in a Category 6 modular jack insert and snapped into a single or double-gang, faceplate. Jack colors are designated in Exhibit 1. Faceplates shall be equipped with designation windows for labeling and blank inserts in unused ports.

3. Wall phone workstations shall be equipped with a studded wall phone faceplate capable of accepting a modular jack insert.

4. All faceplate colors shall be coordinated with the Architect or owner at the time of installation.

5. In the MDF or IDF, each Category 6 cable shall be terminated on the back of Category 6 rack mounted patch panels which are mounted in the equipment cabinets.

6. Category 6 cable shall be terminated with the T568B sequence.

B. Workstation Configurations

1. Office Workstation

a. Install (2) yellow Category 6 cables for data into a 6-port double-gang flush faceplate. The yellow cables shall be terminated with ivory category 6 modular jacks and placed in the first and second position in the faceplate.

1) Furnish a minimum of (1) 2-port workstation on each of (2) walls in each office of approximately 100 sq. ft. Offices that are

smaller or larger shall be designed with consideration given to the size of the office and number of personnel planned for the office.

2) Modular furniture clusters shall be designed to accommodate the user requirements at the time of construction.

2. Ceiling-Mounted Projector Outlet

a. Install (1) Purple (or Violet) Category 6 cable with 20-foot slack loop at each ceiling mounted projector location, terminated with a purple category 6 modular jack placed in a surface mounted box and secured to the building structure when mounted above the accessible ceiling.

1) When a Ceiling Mounted Projector outlet is installed above the accessible ceiling, a purple adhesive dot shall be attached to the ceiling grid directly below the outlet location for future identification of the outlet location.

2) When an accessible ceiling is not available, the designer shall coordinate with the audio/visual consultant to termination requirements.

3) The designer shall coordinate with the audio/visual consultant to determine quantities and locations of projectors.

3. Audio/Visual Control System (Control Panel)

a. Install (1) Purple (or Violet) Category 6 cable at each control panel location, terminated with a purple category 6 modular jack placed in a surface mounted box and secured to the building structure when mounted above the accessible ceiling.

1) When an Audio/Visual Control System Panel outlet is installed above the accessible ceiling, a purple adhesive dot shall be attached to the ceiling grid directly below the outlet location for future identification of the outlet location.

2) When an accessible ceiling is not available, the designer shall coordinate with the audio/visual consultant to termination requirements.

3) The designer shall coordinate with the audio/visual consultant to determine quantities and locations of projectors.

4. Wireless Access Point Outlet

a. Install (1) white Category 6 cable with 20-foot slack loop at each wireless access point location, terminated with a white Category 6 modular jack placed in a surface mounted box and secured to the building structure when mounted above the accessible ceiling.

1) When a Wireless Access Point outlet is installed above the accessible ceiling, a white adhesive dot shall be attached to the ceiling grid directly below the outlet location for future identification of the outlet location.

2) When an accessible ceiling is not available, the outlet for the wireless access point shall be terminated in a 2-port single gang flush mounted faceplate located 6-inches below ceiling not to exceed 12-feet above finished floor.

3) The designer shall coordinate with the City of San Antonio Information Technology Services Department to determine quantities and locations of wireless access points.

5. IP Camera Outlet

a. Install (1) red Category 6 cable with 20-foot slack loop at each IP camera location, terminated on red category 6 modular jack placed in a surface mounted box and secured to the building structure when mounted above the ceiling.

1) When an IP Camera workstation is installed above the accessible ceiling, a red adhesive dot shall be attached to the ceiling grid directly below the outlet location for future identification of the outlet location.

2) When an accessible ceiling is not available, the outlet for the IP camera shall be terminated in a 2-port single gang flush mounted faceplate located 6-inches below the ceiling not to exceed 12-feet above finished floor.

3) The designer shall coordinate with the City of San Antonio Information technology Services Department to determine quantities and locations of IP Cameras.

C. Patch Cables

1. MDF

a. Fiber Patch Cables – Duplex

1) In the MDF furnish to the City of San Antonio Information technology Services Department at the time of substantial completion (1) fiber optic patch cable plus 25 percent spare for each terminated strand.

2) Coordinate with City of San Antonio Information technology Services Department for patch cable types, connectors, lengths and colors.

b. Copper Patch Cables

1) In the MDF, furnish to the City of San Antonio Information Technology Services Department at the time of final substantial completion (1) 28 AWG Category 6 modular non-booted patch cable plus 25 percent spare for each terminated cable.

2) Coordinate with City of San Antonio Information Technology Services Department for lengths of patch cables.

a) Category 6 patch cables for each end user workstation outlet terminated shall be black.

b) Category 6 patch cable for each audio/visual outlet terminated shall be purple.

c) Category 6 patch cable for each wireless access outlet terminated shall be white.

d) Category 6 patch cable for each IP camera outlet terminated shall be red.

2. IDF

a. Fiber Patch Cables – Duplex

1) In each IDF furnish to the City of San Antonio Information Technology Services Department owner at the time of substantial completion (1) fiber optic patch cable plus 25 percent for each terminated strand.

2) Coordinate with City of San Antonio Information technology Services Department for patch cable types, connectors, lengths and colors.

b. Copper Patch Cables

1) In each IDF, furnish to the owner at the time of substantial completion (1) 28 AWG Category 6 modular non-booted patch cable plus 25 percent for each terminated cable.

2) Coordinate with City of San Antonio Information Technology Services Department for lengths of patch cables.

a) Category 6 patch cables for each end user workstation outlet terminated shall be black.

b) Category 6 patch cables for the active equipment side of each end user workstation outlet terminated shall be yellow.

c) Category 6 patch cable for each audio/visual outlet terminated shall be purple.

d) Category 6 patch cable for each wireless access outlet terminated shall be white.

e) Category 6 patch cable for each IP camera outlet terminated shall be red.

7.07 Grounding

A. Grounding shall be designed and installed in accordance with ANSI-J-STD-607-B.

1. Install (1) Telecommunications Main Grounding Busbar (TMGB) in the MDF and (1) Telecommunications Grounding Busbar (TGB) in each IDF.

   a. The TMGB and TGB shall be labeled.

2. Install a Telecommunications Bonding Backbone (TBB), #3/0 AWG stranded green insulated copper conductor in a star topology between the TMGB and each TGB in each building. When IDFs are stacked a single TBB can be daisy-chained between TGBs back to the TMGB.

3. Install an Equipment Bonding Conductor (EBC), #6 AWG green insulated conductor from the TMGB or TGB as applicable to each cable runway system, equipment rack, cabinet, lightning protector, or multi-pair cable with a metallic element.

   a. Install a #3/0 AWG stranded green insulated copper conductor from the TMGB to the main building electrical service ground in each building.

   b. In a metal frame (structural steel) building, where the steel framework is readily accessible within or external to the room; each TGB and TMGB shall be bonded to the vertical steel metal frame using a minimum #6 AWG conductor. The connection to building steel does not eliminate the requirement for the TBB or BC to the service ground.

4. Install a Grounding Equalizer Conductor, #3/0 AWG stranded green insulted copper conductor to interconnect multiple TBBs on the top floor and every 3rd floor when required by ANSI J-STD-607-B.

5. When exceeding 13 feet the conductors shall be sized at 2 kcmil per linear foot of conductor length up to a maximum of 3/0 AWG.

7.08 Labeling

1. Coordination with and approval by the City of San Antonio Information Technology Services Department is required on the specific site labeling schema.

2. All labels shall be typed (not handwritten)

3. Verify room numbers and confirm the final room numbering scheme prior to generating labels.

4. Horizontal Cables shall be labeled within 12 inches from the termination point inside the MDF/IDF.

5. Horizontal Cables shall be labeled within 6 inches from the termination point at the workstation end.

6. Backbone Fiber and Copper Cables shall be labeled within 12 inches of the visible end of the jacket.

7. Fiber Innerduct shall be labeled within 12 inches of the point of entry of the fiber optic enclosure.

8. Cables shall be labeled identically at both ends.

9. MDFs and IDFs Room shall be labeled (signage) with the permanent room designations that match the final building signage for cable labeling.

10. Equipment cabinets or racks in each MDF or IDF shall be labeled in sequential numeric order. Labels shall be centered on the top front of the equipment rack.

11. Fiber optic backbone cable labels shall contain the cable origin room number, the cable destination room number, fiber strand numbers, and type (i.e. MDFA150-IDFC126-48SM001-048).

12. Fiber optic enclosures shall be labeled alpha-numeric starting with the 1st fiber optic enclosure in the top of the 1st equipment rack. A label for each terminated strand shall be securely placed inside each fiber optic enclosure.

13. Fiber optic couplers panels in fiber enclosures shall be labeled at each end by strand denoting MDF and/or IDF the cable comes from, and strand number to and from respectively (i.e. IDFC126-48SM001-048).

14. Copper backbone cables labels shall contain the cable origin room number, the cable destination room number, and cable pairs (i.e. MDFA150-IDFC126/001-025).

15. Horizontal cables shall be labeled identically at each end with the destination end and origin room number, patch panel number, and port number. (i.e. IDFC126-C115-B5).

16. Patch panels in each closet shall be uniquely alphabetically labeled sequentially starting with the first Patch Panel in the top of the first equipment rack (i.e. A, B, C, D, E, etc.). Each MDF or IDF starts with A and shall not repeat a letter.

17. 110-type blocks shall contain the origin room number, destination room number, and pair numbers, under each pair termination. (i.e. MDFA150-IDFC126-PR 1-50). 110-type block labels shall be printed on product-specific label strips and placed into label holders.

18. Workstation Faceplates shall be labeled denoting origin MDF/IDF Room Number, patch panel, and port number (i.e. IDFC126-B5).

7.09 Testing

A. All test results shall be submitted to the owner along with all other final documentation. Test results shall be submitted in both PDF format and the Native Tester format along with the software needed to read the Native Tester Format.

B. Terminated fiber optic strands shall be tested bi-directionally end to end be and certified in accordance with applicable industry standards and manufacturer certifications requirements with an OTDR field and Light Meter tester that is within their calibration period.

C. Terminated backbone copper cable links shall be tested in accordance with applicable industry standards and manufacturer certification requirements for attenuation, continuity, and pin-mapping with approved field tester(s) that are within their calibration period.

D. Terminated Category 6 UTP cable links shall be tested in accordance with applicable industry standards and manufacturer certification requirements for Category 6 compliance with approved field tester(s) that are within their calibration period.

7.10 As-Built Documentation

A. Produce drawings depicting the condition of the Structured Cabling System as installed produced in AutoCAD 2010 or higher and provided in hardcopy, electronically in .DWG and .PDF format. Include the exact dimensions and locations of MDF and IDF layouts, wall elevations, equipment cabinet elevations, cable runways, cable tray, sleeves, backbone and horizontal cable pathways, workstation locations, and numbering and labeling scheme.

B. A half-size hard copy of the as-built drawings for the applicable region served by the MDF and/or IDFs shall be provided in MDF and each IDF for reference.

C. Produce cable records for the Structured Cabling System as installed to include a list of all horizontal and backbone cables produced in an Excel format and provided in hardcopy and electronic format indicating cable number, unique cable label, cable type, origin and destination, length, termination method, and pass/fail result.

D. Produce (3) hard copies of all test results for each cable, to include technician's name and date stamp, a list of tested cables, and the individual results for each cable tested. Test results shall be furnished on CD ROM to include native file format and .PDF format.

PART 8 - SUMMARY OF STANDARDS

8.01 Summary

A. All aspects of this City of San Antonio Structured Cabling Infrastructure Standards shall be applied to the design process for new, leased and renovated facilities.

B. A Division 27 specification and T-Series drawings for the Structured cabling System shall be commissioned and issued by the Architect during the design phases for each facility or project. Drawings and specifications shall be sealed with a current RCDD stamp.

PART 9 - EXHIBITS

EXHIBIT 1 - ACCEPTABLE MANUFACTURERS / PRODUCTS

A. The following list or manufacturers / products is provided for reference only and is not all inclusive. All manufacturers / products shall be verified by the designer for each project and confirmed with The City of San Antonio Information Technology Services Department prior to issuing any construction documents.

B. Where specific manufacturers / products are mentioned, an equivalent will be considered following an official submission of product literature and written acceptance by the City of San Antonio Information Technology Services Department.

C. Fiber Optic Backbone Cable

1. Indoor
   a. 9/125µm Single-Mode Plenum Rated Armored
      1) Panduit
      2) Chromatic
      3) Commscope
      4) Corning
      5) Systimax
2. Outdoor Underground
   a. 9/125µm Indoor/Outdoor Single-Mode Armored
      1) Panduit
      2) Chromatic
      3) Commscope
      4) Corning
      5) Systimax
3. Outdoor Aerial
   a. 9/125µm Indoor/Outdoor Single-Mode Armored
      1) Panduit
      2) Chromatic
      3) Commscope
      4) Corning

5) Systimax

4. Fiber Optic Fabric Innerduct

a. Indoor Plenum Rated

1) MaxCell

b. Outdoor

1) MaxCell

D. Copper Backbone Cable

1. Indoor

a. Category 3 24 AWG Unshielded Twisted Pair (UTP) Plenum (White Sheath)

1) General

2) Mohawk

3) Superior

4) Systimax

2. Outdoor Underground

a. Category 3 24 AWG Unshielded Twisted Pair (UTP) Flooded (PE-89)

1) General

2) Mohawk

3) Superior

4) Systimax

3. Outdoor Aerial

a. 24 AWG Unshielded Twisted Pair (UTP) Self-Supported

1) General

2) Mohawk

3) Superior

4) Systimax

E. Horizontal Cable

1. Category 6 UTP Plenum (Minimum 350 MHz)

a. Network Access (Yellow Sheath)

1) General

2) Panduit

b. Wireless Access Points (White Sheath)

1) General

2) Panduit

c. AV Access (Purple Sheath)

1) General

2) Panduit

d. IP Security (Red Sheath)

1) General

2) Panduit

F. Fiber Optic Cable Termination

1. Fiber Enclosure

a. Panduit Opticom Rack Mount Fiber Enclosure – Part No. FRMEXX

2. 9µm Single-Mode Fiber Coupler Panel

a. 9µm Panduit Opticom LC Fiber Adapter Panel – Part No. FAP6WBUDLCZ

3. Fiber Blank Panel

a. Panduit Opticom Blank Fiber Adapter Panel – Part No. FAPB

4. 9µm Single-Mode LC Pigtails

a. Panduit Opti-Core OS1/OS2 Single-Mode Fiber Optic Pigtails (LC to Pigtail) – Part No. F9B10-NM1Y

5. Loose Tube Fiber Fan-Out Kit

a. Panduit

G. Copper Cable Termination

1. Building Entrance Terminals

a. Primary Copper Protectors

1) Circa 50-Pair 110 Style Lightning Protection Block

2) Solid State Digital Series Surge Protection Modules

2. Backbone Cable Termination Panels

a. Rack Mounted Voice Patch Panels

1) Panduit Voice Patch Panel – Part No. VP24382TV25Y

3. Category 6 Horizontal Rack Mounted Patch Panels

a. Category 6 48-Port Patch Panels – Panduit Mini-Com Flush Mount Modular Patch Panels - Part No. CPP48FMWBLY

4. Category 6 Modular Jacks

a. Network Access

1) Equipment Room/Telecommunications Room End (Black)

a) Panduit Mini-com TX6 Plus UTP Jack Modules Part No. CJ688TGBL

2) Field End (Ivory)

a) Panduit Mini-Com TX6 Plus UTP Jack Modules Part No. CJ688TGEI

b. Wireless Access Points

1) Equipment Room/Telecommunications Room End (White)

a) Panduit Mini-Com TX6 Plus UTP Jack Modules Part No. CJ688TGWH

2) Field End (White)

a) Panduit Mini-Com TX6 Plus UTP Jack Modules Part No. CJ688TGWH

c. AV Access (Violet)

1) Equipment Room/Telecommunications Room End (Violet)

a) Panduit Mini-Com TX6 Plus UTP Jack Modules Part No. CJ688TGVL

2) Field End (Violet)

a) Panduit Mini-Com TX6 Plus UTP Jack Modules Part No. CJ688TGVL

d. IP Security

1) Equipment Room/Telecommunications Room End (Red)

a) Panduit Mini-Com TX6 Plus UTP Jack Modules Part No. CJ688TGRD

2) Field End (Red)

a) Panduit Mini-Com TX6 Plus UTP Jack Modules Part No. CJ688TGRD

5. Telecommunications Faceplates with Designation Window

a. 2-Port Single Gang Flush (Stainless Steel)

1) Panduit Mini-Com Stainless Steel Faceplates with Labels Part No. CFPL2SY

b. 4-Port Single Gang Flush (Stainless Steel)

1) Panduit Mini-Com Stainless Steel Faceplates with Labels Part No. CFPL4SY

c. 4-Port Double Gang Flush (Stainless Steel)

1) Panduit Mini-Com Stainless Steel Faceplates with Labels Part No. CFPL6S-2GY

6. Wall Phone Faceplate (Stainless Steel)

a. Panduit Phone Wall Plate Module Part No. KWP6PY

7. 2-Port Surface Mount Box (White)

a. Panduit Mini-Com Surface Mount Box Part No. CBXJ2HW-A

8. Blank Insert (White)

a. Panduit Mini-Com Blank Module – Part No. CMBWH-X

H. Equipment Racks, Cabinets, Wire Management, and Accessories

1. Two-Post Rack - 19" x 84" Open Frame (Black)

a. Panduit Part No. CMR19x84NU

2. Four-Post Open Frame Rack – 23.3" x 84" x 30.2" (Black)

a. Panduit Part No. CMR4P84

3. Equipment Cabinet (Black)

a. Chatsworth F-Series TeraFrame Gen 3 Cabinet Part No. FF2J-113B-C22A

b. Chatsworth CUBE-iT Wall-Mounted Cabinet 48" H X 24" W X 30" D Black Part No. 11996-748

c. Chatsworth Thin-Line II Wall-Mounted Cabinet 36" H X 26" W X 12" D 6U Part No. 13050-723

4. Vertical Wire Managers (Black)

a. Patch Runner Double Sided Vertical Cable Management System Panduit - Part No. PRV6

b. Patch Runner Vertical Cable Management Door Panduit - Part No. PRD6

c. Chatsworth F-Series TeraFrame Gen 3 Finger Cable Manager – Part No. 39112-C14

5. Horizontal Wire Managers (Black)

a. Net Manager Double Sided High Capacity Horizontal Cable Mangers Panduit - Part No. NCMH2

I. Cable Runway (Ladder Type)

1. 12" Universal Cable Runway

a. Chatsworth - Part No. 10250-712

2. 12" Cable Runway Radius Drop, Cross Member

a. Chatsworth - Part No. 12100-712

3. 12" Cable Runway Radius Drop, Stringer

a. Chatsworth - Part No. 12101-712

4. 18" Universal Cable Runway

a. Chatsworth - Part No. 10250-718

5. 18" Cable Runway Radius Drop, Cross Member

a. Chatsworth - Part No. 12100-718

6. 18" Cable Runway Radius Drop, Stringer

a. Chatsworth - Part No. 12101-718

7. Cable Runway Butt-Splice Kit

a. Chatsworth - Part No. 11301-701

8. Cable Runway Junction-Splice Kit

a. Chatsworth - Part No. 11302-701

9. Cable Runway Butt-Swivel Splice Kit
   a. Chatsworth - Part No. 10487-701

10. Rack-to-Runway Mounting Kit
    a. Chatsworth - Part No. 10595-712
11. Cable Runway Elevation Kit for Racks
    a. Chatsworth - Part No. 10506-706
12. Cable Runway Elevation Kit for Cabinets
    a. Chatsworth - Part No. 10506-716
13. 12" Triangular Support Bracket, Aluminum
    a. Chatsworth - Part No. 11312-712
14. 12" Wall Angle Support Kit, Cable Runway
    a. Chatsworth - Part No. 11421-712
15. 18" Triangular Support Bracket, Aluminum
    a. Chatsworth - Part No. 11312-718
16. 18" Wall Angle Support Kit, Cable Runway
    a. Chatsworth - Part No. 11421-718
17. 90 Degree Runway-Splice Kit
    a. Chatsworth - Part No. 11314-701
18. 45 Degree Runway-Splice Kit
    a. Chatsworth - Part No. 11313-712
19. Foot Kit, Cable Runway
    a. Chatsworth - Part No. 11309-001
20. Vertical Wall Brackets (pair)
    a. Chatsworth - Part No. 10608-701
21. Threaded Ceiling Kit, Cable Runway
    a. Chatsworth - Part No. 11310-001

22. Threaded Rod Cover
    a. Chatsworth - Part No. 11085-001
23. Protective End Caps for Cable Runway
    a. Chatsworth - Part No. 10642-001
24. End Closing Kit, Cable Runway
    a. Chatsworth - Part No. 11700-712

J. Pathway Cable Support
1. Panduit J-Mod Cable Support System
2. Erico – CADDY CAT LINKS J-Hook Series
3. Panduit Plenum Rated Hook & Loop (Black)

K. Grounding and Bonding
1. Grounding Bus Bar, 20"
    a. Chatsworth - Part No. 40153-020
2. Grounding Bus Bar, 12"
    a. Chatsworth - Part No. 13622-012
3. Cable Runway Ground Strap Kit
    a. Chatsworth - Part No. 40164-001
4. One Mounting Hole Ground Terminal Block
    a. Chatsworth - Part No. 08009-001
5. Horizontal Rack Ground Bar for Wall Mount Cabinet
    a. Chatsworth - Part No. 10610-019
6. #6 AWG Solid Green Insulation Ground Wire
    a. Superior Essex - Part No. 12-018-04
7. #3/0 Stranded Green Insulation Ground Wire
8. Cable Sheath Bonding Clamp

L. Labeling
1. Permanent Labels for Fiber Optic Cables

a. Brady

b. Panduit Self Laminating Labels

2. Permanent Labels for Innerduct

a. Panduit Dome-Top Ty Marker

3. Permanent Labels for Copper Cables

a. Panduit Self-Laminating Labels

4. Permanent Labels for Backbone Fiber Optic Cables

a. Panduit Dome-Top Ty Marker

5. Permanent Labels for Patch Panels

a. Panduit Component Label

6. Permanent Labels for Faceplates

a. Panduit Component Label

M. Fire Stop

1. STI Spec Seal Part No.

2. 3M Products Part No.

N. Plywood

1. 8' H x 4' W x ¾" Sheets of BC grade fire-rated plywood

O. Fire Retardant Paint (White)

P. Fiber Patch Cables

1. Panduit

2. Corning

Q. Copper Patch Cables

1. Panduit

EXHIBIT 2 – TYPICAL DETAILS

End of Guideline

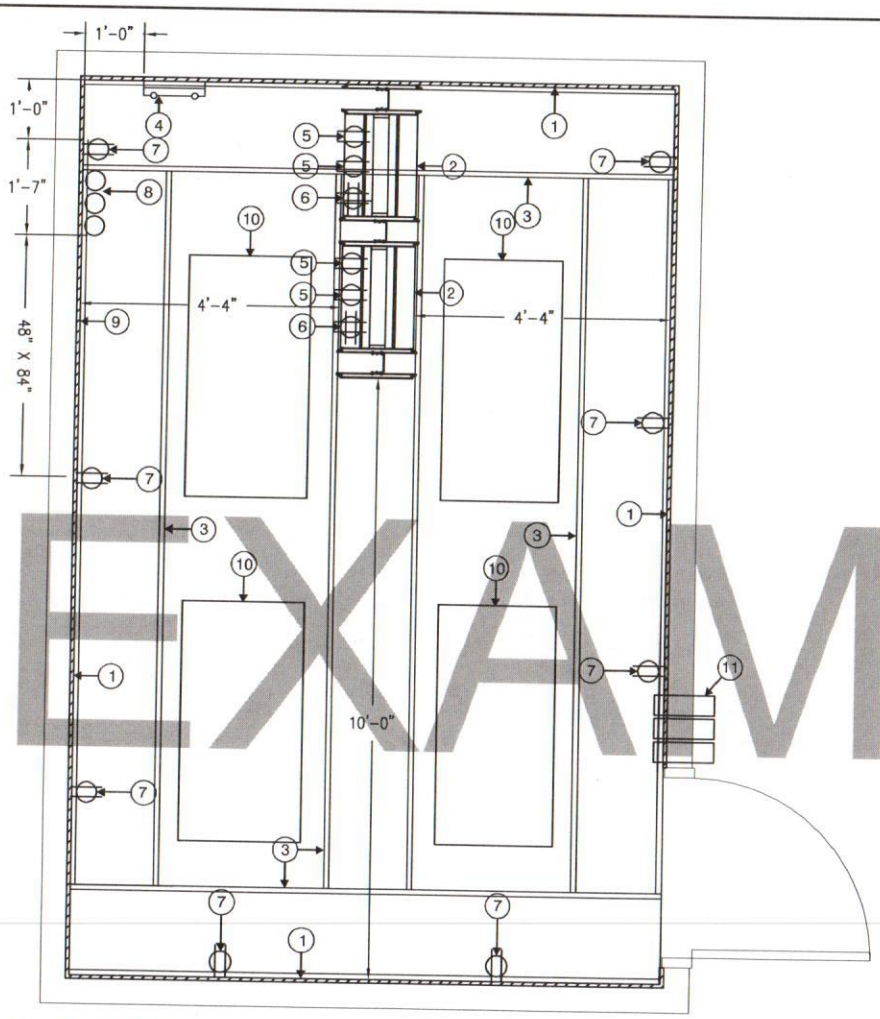

1 / xx Typical MDF Room Layout With Racks

SCALE: 1/2"=1'-0"

TYPICAL MDF ROOM LAYOUT WITH RACKS KEYED NOTES

1. 4 – FEET X 8 – FEET X 3/4 – INCH AC GRADE VOID FREE FIRE RATED PLYWOOD INSTALLED VERTICALLY STARTING AT 12 – INCHES ABOVE FINISHED FLOOR ON ALL PERIMETER WALLS. THE PLYWOOD SHALL BE INSTALLED WITH THE "A" GRADE SIDE EXPOSED AND THE "C" GRADE SIDE AGAINST THE BUILDING WALL OR STRUCTURE. THE PLYWOOD SHALL BE PAINTED WITH TWO COATS OF FIRE RETARDANT PAINT AND ONE STAMP FROM EACH SHEET SHALL BE MASKED DURING THE PAINTING AND UNCOVERED AFTER THE PAINT HAS DRIED SO THE FIRE RATED PLYWOOD STAMPS ARE VISIBLE FOR INSPECTION. (BY DIV. 27)
2. 19 – INCH X 84 – INCH EQUIPMENT RACK WITH VERTICAL CABLE MANAGERS. (BY DIV. 27)
3. 18 – INCH LADDER RACK MOUNTED AT 84 – INCHES ABOVE FINISHED FLOOR. (BY DIV. 27)
4. GROUND BUS BAR MOUNTED AT 78 – INCHES ABOVE FINISHED FLOOR. (BY DIV. 27)
5. DEDICATED 208 VAC 20 AMP CIRCUIT IN J-BOX MOUNTED TO UNISTRUT ABOVE THE LADDER RACK AND PROVIDED WITH A 7 – FT SO TYPE CORD WITH FEMALE NEMA L6 – 20R RECEPTACLE ON THE END. (BY DIV. 26)
6. DEDICATED 120 VAC 20 AMP CIRCUIT IN J-BOX MOUNTED TO UNISTRUT ABOVE THE LADDER RACK AND PROVIDED WITH A 7 – FT SO TYPE CORD WITH FEMALE NEMA 5 – 20R RECEPTACLE ON THE END. (BY DIV. 26)
7. 20 AMP CIRCUIT WITH QUAD RECEPTACLE NEMA 5-20R FLUSH MOUNTED TO THE FINISHED WALL SURFACE AT 18 – INCHES ABOVE FINISHED FLOOR. OUTLETS SHALL BE SPACED NO FARTHER APART THAN 6 – FEET. MAXIMUM OF (6) PER CIRCUIT. (BY DIV. 26)
8. (3) 4 – INCH CONDUITS TERMINATED 4 – INCHES ABOVE FINISHED FLOOR AND NO FARTHER THAN 2 INCHES FROM THE WALL FOR SERVICE PROVIDER. CONTRACTOR SHALL PROVIDE PULL STRING AND NYLON BUSHINGS AND CAPS ON END OF CONDUIT. (BY DIV. 26)
9. 48 – INCHES WIDE X 84 – INCHES HIGH RESERVED FOR SERVICE PROVIDER TERMINATION. (BY DIV. 27)
10. TYPICAL LIGHTING ORIENTATION, ENSURE THERE IS 50 FOOT CANDLES AT 2 – FEET ABOVE FINISHED FLOOR. (BY DIV. 26)
11. (3) 4 – INCH EMT CONDUIT SLEEVES ABOVE ACCESSIBLE CEILING WITH NYLON BUSHINGS ON EACH END AND SECURED TO WALL. CONDUIT SLEEVES SHALL BE SEALED ON THE EXTERIOR AND INTERIOR TO RETURN THE WALL BACK TO THE ORIGINAL RATING. IF WALL IS NOT RATED CONDUIT SHALL BE SEALED ON THE EXTERIOR AND INTERIOR TO REDUCE NOISE TRAVELING THROUGH THE PENETRATION. CONDUIT SLEEVES SHALL BE USED FOR LOW VOLTAGE DATA VOICE VIDEO AND SECURITY ONLY. (BY DIV. 26)

EXAMPLE

COMBS Consulting Group technology & security
6200 N-10 West, Ste. 103 Phone: 210-699-7987
San Antonio, Texas 78230

PROJECT NAME:

CITY OF SAN ANTONIO
STRUCTURED CABLING INFRASTRUCTURE STANDARDS

DATE: 03-04-14

SHEET: 1

SCALE: As Shown

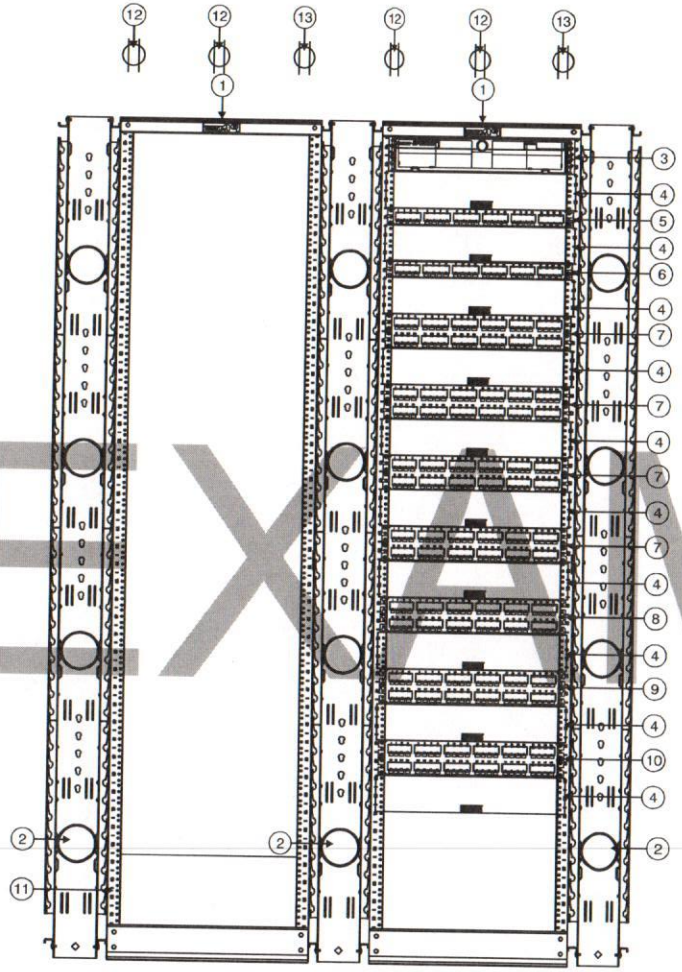

1 XX Typical MDF Rack Elevation

SCALE: 1"=1'-0"

TYPICAL MDF ROOM RACK ELEVATION KEYED NOTES

1. 19 – INCH X 84 – INCH EQUIPMENT RACK. (BY DIV. 27)
2. DOUBLE – SIDED VERTICAL CABLE MANAGER. (BY DIV. 27)
3. RACK MOUNTED 48 – PORT FIBER OPTIC ENCLOSURE FOR SINGLE MODE FIBER OPTIC CABLE. (BY DIV. 27)
4. DOUBLE–SIDED HORIZONTAL CABLE MANAGER. (BY DIV. 27)
5. RACK MOUNTED 24 – PORT VOICE PATCH PANEL FOR INCOMING TELCO SERVICE. (BY DIV. 27)
6. RACK MOUNTED 24 – PORT VOICE PATCH PANEL. (BY DIV. 27)
7. RACK MOUNTED 48 – PORT CATEGORY 6 PATCH PANEL FOR DATA. (BY DIV. 27)
8. RACK MOUNTED 48 – PORT CATEGORY 6 PATCH PANEL FOR WIRELESS ACCESS POINTS. (BY DIV. 27)
9. RACK MOUNTED 48 – PORT CATEGORY 6 PATCH PANEL FOR AUDIO VISUAL SYSTEMS. (BY DIV. 27)
10. RACK MOUNTED 48 – PORT CATEGORY 6 PATCH PANEL FOR IP SECURITY. (BY DIV. 27)
11. (4) RACK MOUNTED UNITS OF SPACE FOR OWNER PROVIDED / OWNER INSTALLED UPS. (BY DIV. 27)
12. DEDICATED 208 VAC 20 AMP CIRCUIT IN J–BOX MOUNTED TO UNISTRUT ABOVE THE LADDER RACK AND PROVIDED WITH A 7 – FT SO TYPE CORD WITH FEMALE NEMA L6 – 20R RECEPTACLE ON THE END. (BY DIV. 26)
13. DEDICATED 120 VAC 20 AMP CIRCUIT IN J–BOX MOUNTED TO UNISTRUT ABOVE THE LADDER RACK AND PROVIDED WITH A 7 – FT SO TYPE CORD WITH FEMALE NEMA 5 – 20R RECEPTACLE ON THE END. (BY DIV. 26)

EXAMPLE

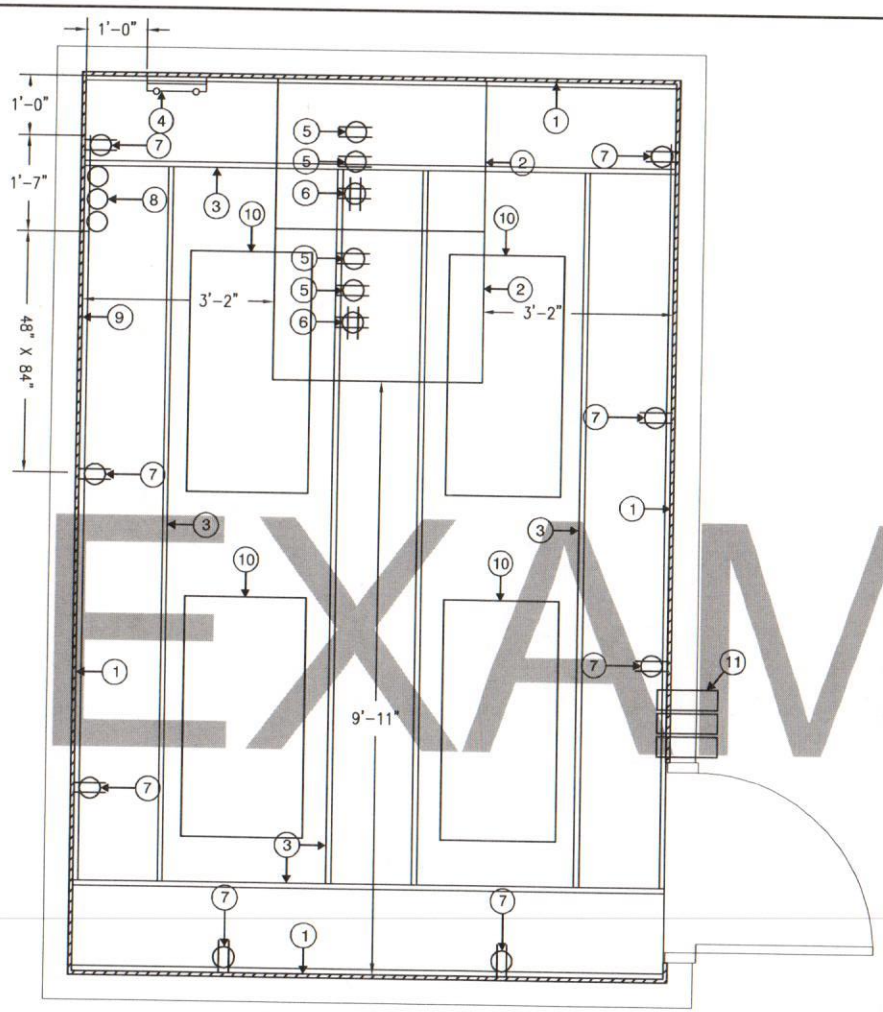

Typical MDF Room Layout With Cabinets

1/XX

SCALE: 1/2"=1'-0"

TYPICAL MDF ROOM LAYOUT WITH CABINETS KEYED NOTES

1. 4 – FEET X 8 – FEET X 3/4 – INCH AC GRADE VOID FREE FIRE RATED PLYWOOD INSTALLED VERTICALLY STARTING AT 12 – INCHES ABOVE FINISHED FLOOR ON ALL PERIMETER WALLS. THE PLYWOOD SHALL BE INSTALLED WITH THE "A" GRADE SIDE EXPOSED AND THE "C" GRADE SIDE AGAINST THE BUILDING WALL OR STRUCTURE. THE PLYWOOD SHALL BE PAINTED WITH TWO COATS OF FIRE RETARDANT PAINT AND ONE STAMP FROM EACH SHEET SHALL BE MASKED DURING THE PAINTING AND UNCOVERED AFTER THE PAINT HAS DRIED SO THE FIRE RATED PLYWOOD STAMPS ARE VISIBLE FOR INSPECTION. (BY DIV. 27)
2. 27.6 – INCH X 84.6 – INCH TERAFRAME CABINET WITH VERTICAL CABLE MANAGERS. (BY DIV. 27)
3. 12 – INCH LADDER RACK MOUNTED AT 84 – INCHES ABOVE FINISHED FLOOR. (BY DIV. 27)
4. GROUND BUS BAR MOUNTED AT 78 – INCHES ABOVE FINISHED FLOOR. (BY DIV. 27)
5. DEDICATED 208 VAC 20 AMP CIRCUIT IN J–BOX MOUNTED TO UNISTRUT ABOVE THE LADDER RACK AND PROVIDED WITH A 7 – FT SO TYPE CORD WITH FEMALE NEMA L6 – 20R RECEPTACLE ON THE END. (BY DIV. 26)
6. DEDICATED 120 VAC 20 AMP CIRCUIT IN J–BOX MOUNTED TO UNISTRUT ABOVE THE LADDER RACK AND PROVIDED WITH A 7 – FT SO TYPE CORD WITH FEMALE NEMA 5 – 20R RECEPTACLE ON THE END. (BY DIV. 26)
7. 20 AMP CIRCUIT WITH QUAD RECEPTACLE NEMA 5–20R FLUSH MOUNTED TO THE FINISHED WALL SURFACE AT 18 – INCHES ABOVE FINISHED FLOOR. OUTLETS SHALL BE SPACED NO FARTHER APART THAN 6 – FEET. MAXIMUM OF (6) PER CIRCUIT. (BY DIV. 26)
8. (3) 4 – INCH CONDUITS TERMINATED 4 – INCHES ABOVE FINISHED FLOOR AND NO FARTHER THAN 2 INCHES FROM THE WALL FOR SERVICE PROVIDER. CONTRACTOR SHALL PROVIDE PULL STRING AND NYLON BUSHINGS AND CAPS ON END OF CONDUIT. (BY DIV. 26)
9. 48 – INCHES WIDE X 84 – INCHES HIGH RESERVED FOR SERVICE PROVIDER TERMINATION. (BY DIV. 27)
10. TYPICAL LIGHTING ORIENTATION, ENSURE THERE IS 50 FOOT CANDLES AT 2 – FEET ABOVE FINISHED FLOOR. (BY DIV. 26)
11. (3) 4 – INCH EMT CONDUIT SLEEVES ABOVE ACCESSIBLE CEILING WITH NYLON BUSHINGS ON EACH END AND SECURED TO WALL. CONDUIT SLEEVES SHALL BE SEALED ON THE EXTERIOR AND INTERIOR TO RETURN THE WALL BACK TO THE ORIGINAL RATING. IF WALL IS NOT RATED CONDUIT SHALL BE SEALED ON THE EXTERIOR AND INTERIOR TO REDUCE NOISE TRAVELING THROUGH THE PENETRATION. CONDUIT SLEEVES SHALL BE USED FOR LOW VOLTAGE DATA VOICE VIDEO AND SECURITY ONLY. (BY DIV. 26)

EXAMPLE

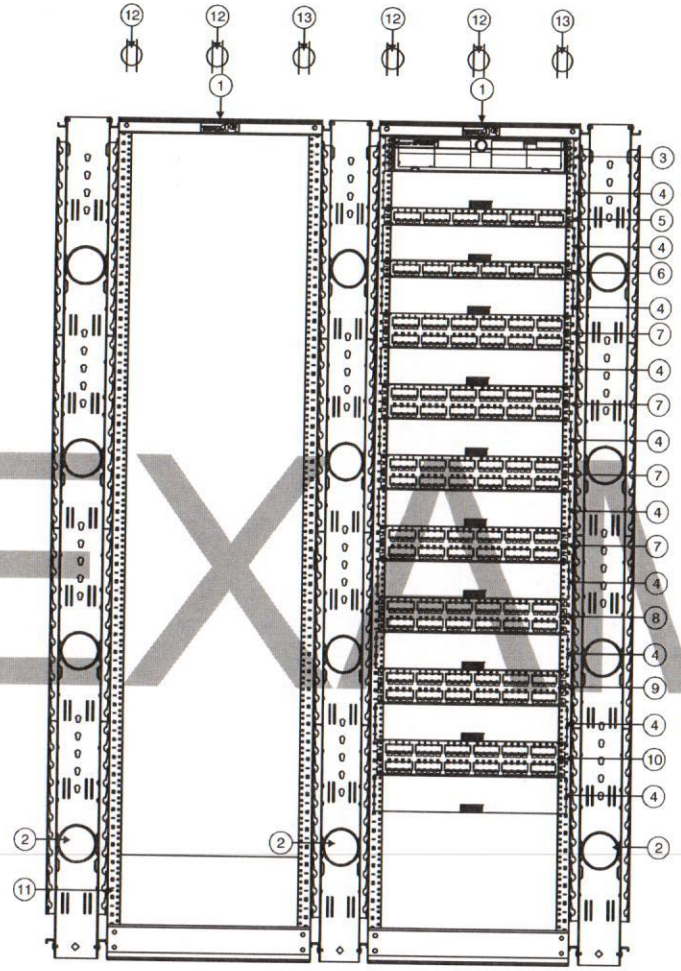

1 / xx Typical MDF Cabinet Elevation

SCALE: 1"=1'-0"

TYPICAL MDF ROOM CABINET ELEVATION KEYED NOTES

1. 27.6 – INCH X 84.6 – INCH TERAFRAME CABINET. (BY DIV. 27)
2. TERAFRAME DOUBLE – SIDED VERTICAL FINGER CABLE MANAGER. (BY DIV. 27)
3. RACK MOUNTED 48 – PORT FIBER OPTIC ENCLOSURE FOR SINGLE MODE FIBER OPTIC CABLE. (BY DIV. 27)
4. DOUBLE-SIDED HORIZONTAL CABLE MANAGER. (BY DIV. 27)
5. RACK MOUNTED 24 – PORT VOICE PATCH PANEL FOR INCOMING TELCO SERVICE. (BY DIV. 27)
6. RACK MOUNTED 24 – PORT VOICE PATCH PANEL. (BY DIV. 27)
7. RACK MOUNTED 48 – PORT CATEGORY 6 PATCH PANEL FOR DATA. (BY DIV. 27)
8. RACK MOUNTED 48 – PORT CATEGORY 6 PATCH PANEL FOR WIRELESS ACCESS POINTS. (BY DIV. 27)
9. RACK MOUNTED 48 – PORT CATEGORY 6 PATCH PANEL FOR AUDIO VISUAL SYSTEMS. (BY DIV. 27)
10. RACK MOUNTED 48 – PORT CATEGORY 6 PATCH PANEL FOR IP SECURITY. (BY DIV. 27)
11. (4) RACK MOUNTED UNITS OF SPACE FOR OWNER PROVIDED / OWNER INSTALLED UPS. (BY DIV. 27)
12. DEDICATED 208 VAC 20 AMP CIRCUIT IN J-BOX MOUNTED TO UNISTRUT ABOVE THE LADDER RACK AND PROVIDED WITH A 7 – FT SO TYPE CORD WITH FEMALE NEMA L6 – 20R RECEPTACLE ON THE END. (BY DIV. 26)
13. DEDICATED 120 VAC 20 AMP CIRCUIT IN J-BOX MOUNTED TO UNISTRUT ABOVE THE LADDER RACK AND PROVIDED WITH A 7 – FT SO TYPE CORD WITH FEMALE NEMA 5 – 20R RECEPTACLE ON THE END. (BY DIV. 26)

EXAMPLE

COMBS Consulting Group technology & security
8000 H-10 West, Ste. 103 Phone: 210-686-7687
San Antonio, Texas 78230

PROJECT NAME:

CITY OF SAN ANTONIO
STRUCTURED CABLING INFRASTRUCTURE STANDARDS

DATE: 03-04-14

SHEET: 4

SCALE: As Shown

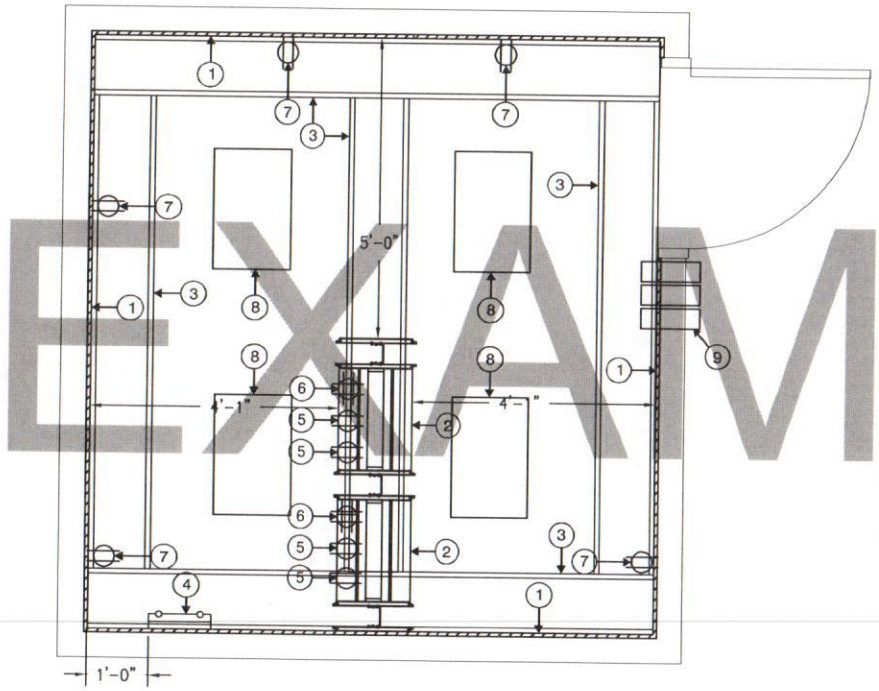

Typical IDF Room Layout With Racks

1 / XX

SCALE: 1/2"=1'-0"

TYPICAL IDF ROOM LAYOUT WITH RACKS KEYED NOTES

1. 4 – FEET X 8 – FEET X 3/4 – INCH AC GRADE VOID FREE FIRE RATED PLYWOOD INSTALLED VERTICALLY STARTING AT 12 – INCHES ABOVE FINISHED FLOOR ON ALL PERIMETER WALLS. THE PLYWOOD SHALL BE INSTALLED WITH THE "A" GRADE SIDE EXPOSED AND THE "C" GRADE SIDE AGAINST THE BUILDING WALL OR STRUCTURE. THE PLYWOOD SHALL BE PAINTED WITH TWO COATS OF FIRE RETARDANT PAINT AND ONE STAMP FROM EACH SHEET SHALL BE MASKED DURING THE PAINTING AND UNCOVERED AFTER THE PAINT HAS DRIED SO THE FIRE RATED PLYWOOD STAMPS ARE VISIBLE FOR INSPECTION. (BY DIV. 27)
2. 19 – INCH X 84 – INCH EQUIPMENT RACK WITH VERTICAL CABLE MANAGERS. (BY DIV. 27)
3. 12 – INCH LADDER RACK MOUNTED AT 84 – INCHES ABOVE FINISHED FLOOR. (BY DIV. 27)
4. GROUND BUS BAR MOUNTED AT 78 – INCHES ABOVE FINISHED FLOOR. (BY DIV. 27)
5. DEDICATED 208 VAC 20 AMP CIRCUIT IN J–BOX MOUNTED TO UNISTRUT ABOVE THE LADDER RACK AND PROVIDED WITH A 7 – FT SO TYPE CORD WITH FEMALE NEMA L6 – 20R RECEPTACLE ON THE END. (BY DIV. 26)
6. DEDICATED 120 VAC 20 AMP CIRCUIT IN J–BOX MOUNTED TO UNISTRUT ABOVE THE LADDER RACK AND PROVIDED WITH A 7 – FT SO TYPE CORD WITH FEMALE NEMA 5 – 20R RECEPTACLE ON THE END. (BY DIV. 26)
7. 20 AMP CIRCUIT WITH QUAD RECEPTACLE NEMA 5–20R FLUSH MOUNTED TO THE FINISHED WALL SURFACE AT 18 – INCHES ABOVE FINISHED FLOOR. OUTLETS SHALL BE SPACED NO FARTHER APART THAN 6 – FEET. MAXIMUM OF (6) PER CIRCUIT. (BY DIV. 26)
8. TYPICAL LIGHTING ORIENTATION, ENSURE THERE IS 50 FOOT CANDLES AT 2 – FEET ABOVE FINISHED FLOOR. (BY DIV. 26)
9. (3) 4 – INCH EMT CONDUIT SLEEVES ABOVE ACCESSIBLE CEILING WITH NYLON BUSHINGS ON EACH END AND SECURED TO WALL. CONDUIT SLEEVES SHALL BE SEALED ON THE EXTERIOR AND INTERIOR TO RETURN THE WALL BACK TO THE ORIGINAL RATING. IF WALL IS NOT RATED CONDUIT SHALL BE SEALED ON THE EXTERIOR AND INTERIOR TO REDUCE NOISE TRAVELING THROUGH THE PENETRATION. CONDUIT SLEEVES SHALL BE USED FOR LOW VOLTAGE DATA VOICE VIDEO AND SECURITY ONLY. (BY DIV. 26)

EXAMPLE

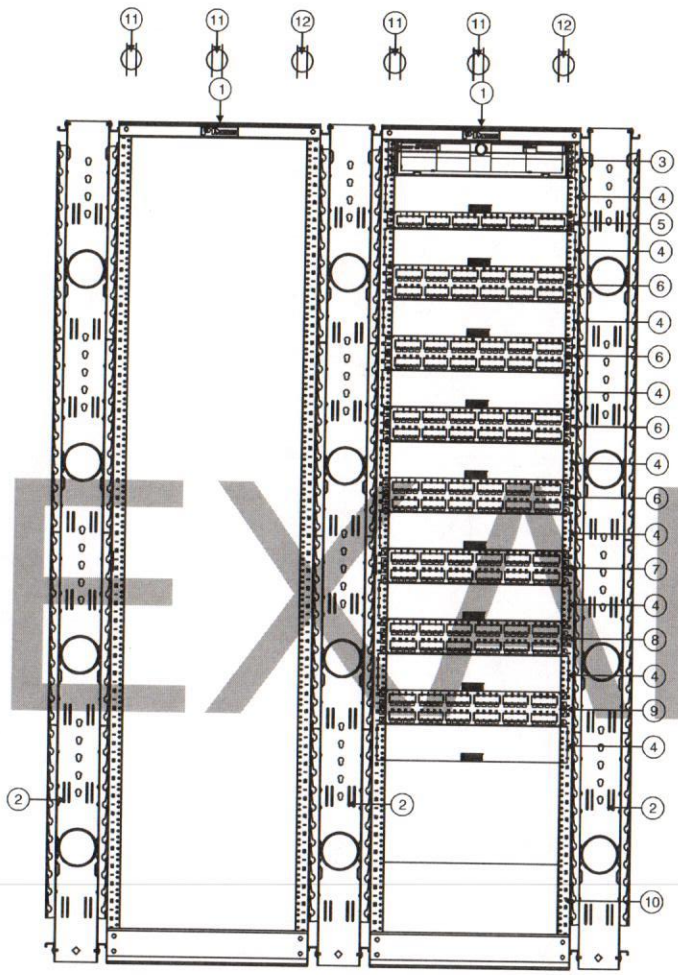

1 / xx Typical IDF Rack Elevation

SCALE: 1"=1'-0"

TYPICAL IDF ROOM RACK ELEVATION KEYED NOTES

1. 19 – INCH X 84 – INCH EQUIPMENT RACK. (BY DIV. 27)
2. DOUBLE – SIDED VERTICAL CABLE MANAGER. (BY DIV. 27)
3. RACK MOUNTED 48 – PORT FIBER OPTIC ENCLOSURE FOR SINGLE MODE FIBER OPTIC CABLE. (BY DIV. 27)
4. DOUBLE–SIDED HORIZONTAL CABLE MANAGER. (BY DIV. 27)
5. RACK MOUNTED 24 – PORT VOICE PATCH PANEL. (BY DIV. 27)
6. RACK MOUNTED 48 – PORT CATEGORY 6 PATCH PANEL FOR DATA. (BY DIV. 27)
7. RACK MOUNTED 48 – PORT CATEGORY 6 PATCH PANEL FOR WIRELESS ACCESS POINTS. (BY DIV. 27)
8. RACK MOUNTED 48 – PORT CATEGORY 6 PATCH PANEL FOR AUDIO VISUAL SYSTEMS. (BY DIV. 27)
9. RACK MOUNTED 48 – PORT CATEGORY 6 PATCH PANEL FOR IP SECURITY. (BY DIV. 27)
10. (4) RACK MOUNTED UNITS OF SPACE FOR OWNER PROVIDED / OWNER INSTALLED UPS. (BY DIV. 27)
11. DEDICATED 208 VAC 20 AMP CIRCUIT IN J–BOX MOUNTED TO UNISTRUT ABOVE THE LADDER RACK AND PROVIDED WITH A 7 – FT SO TYPE CORD WITH FEMALE NEMA L6 – 20R RECEPTACLE ON THE END. (BY DIV. 26)
12. DEDICATED 120 VAC 20 AMP CIRCUIT IN J–BOX MOUNTED TO UNISTRUT ABOVE THE LADDER RACK AND PROVIDED WITH A 7 – FT SO TYPE CORD WITH FEMALE NEMA 5 – 20R RECEPTACLE ON THE END. (BY DIV. 26)

EXAMPLE

COMBS Consulting Group technology & security
8200 B I-10 West, Ste. 103 Phone: 210-699-7587
San Antonio, Texas 78230

PROJECT NAME:

CITY OF SAN ANTONIO
STRUCTURED CABLING INFRASTRUCTURE STANDARDS

DATE: 03-04-14

SHEET: 6

SCALE: As Shown

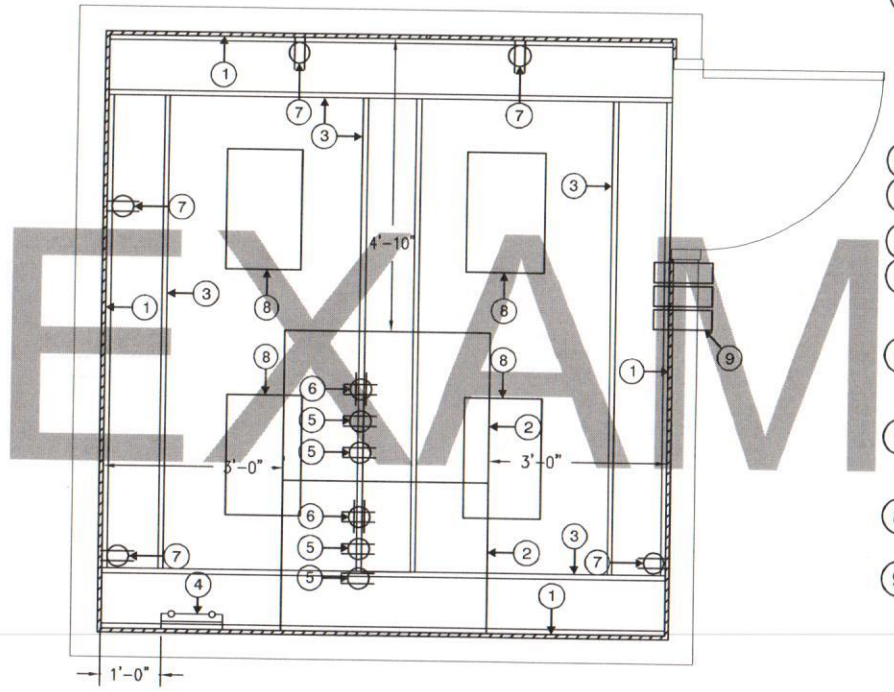

1 / XX Typical IDF Room Layout With Cabinets

SCALE: 1/2"=1'-0"

TYPICAL IDF ROOM LAYOUT WITH CABINETS KEYED NOTES

1. 4 – FEET X 8 – FEET X 3/4 – INCH AC GRADE VOID FREE FIRE RATED PLYWOOD INSTALLED VERTICALLY STARTING AT 12 – INCHES ABOVE FINISHED FLOOR ON ALL PERIMETER WALLS. THE PLYWOOD SHALL BE INSTALLED WITH THE "A" GRADE SIDE EXPOSED AND THE "C" GRADE SIDE AGAINST THE BUILDING WALL OR STRUCTURE. THE PLYWOOD SHALL BE PAINTED WITH TWO COATS OF FIRE RETARDANT PAINT AND ONE STAMP FROM EACH SHEET SHALL BE MASKED DURING THE PAINTING AND UNCOVERED AFTER THE PAINT HAS DRIED SO THE FIRE RATED PLYWOOD STAMPS ARE VISIBLE FOR INSPECTION. (BY DIV. 27)
2. 27.6 – INCH X 84.6 – INCH TERAFRAME CABINET WITH VERTICAL CABLE MANAGERS. (BY DIV. 27)
3. 12 – INCH LADDER RACK MOUNTED AT 84 – INCHES ABOVE FINISHED FLOOR. (BY DIV. 27)
4. GROUND BUS BAR MOUNTED AT 78 – INCHES ABOVE FINISHED FLOOR. (BY DIV. 27)
5. DEDICATED 208 VAC 20 AMP CIRCUIT IN J-BOX MOUNTED TO UNISTRUT ABOVE THE LADDER RACK AND PROVIDED WITH A 7 – FT SO TYPE CORD WITH FEMALE NEMA L6 – 20R RECEPTACLE ON THE END. (BY DIV. 26)
6. DEDICATED 120 VAC 20 AMP CIRCUIT IN J-BOX MOUNTED TO UNISTRUT ABOVE THE LADDER RACK AND PROVIDED WITH A 7 – FT SO TYPE CORD WITH FEMALE NEMA 5 – 20R RECEPTACLE ON THE END. (BY DIV. 26)
7. 20 AMP CIRCUIT WITH QUAD RECEPTACLE NEMA 5-20R FLUSH MOUNTED TO THE FINISHED WALL SURFACE AT 18 – INCHES ABOVE FINISHED FLOOR. OUTLETS SHALL BE SPACED NO FARTHER APART THAN 6 – FEET. MAXIMUM OF (6) PER CIRCUIT. (BY DIV. 26)
8. TYPICAL LIGHTING ORIENTATION, ENSURE THERE IS 50 FOOT CANDLES AT 2 – FEET ABOVE FINISHED FLOOR. (BY DIV. 26)
9. (3) 4 – INCH EMT CONDUIT SLEEVES ABOVE ACCESSIBLE CEILING WITH NYLON BUSHINGS ON EACH END AND SECURED TO WALL. CONDUIT SLEEVES SHALL BE SEALED ON THE EXTERIOR AND INTERIOR TO RETURN THE WALL BACK TO THE ORIGINAL RATING. IF WALL IS NOT RATED CONDUIT SHALL BE SEALED ON THE EXTERIOR AND INTERIOR TO REDUCE NOISE TRAVELING THROUGH THE PENETRATION. CONDUIT SLEEVES SHALL BE USED FOR LOW VOLTAGE DATA VOICE VIDEO AND SECURITY ONLY. (BY DIV. 26)

EXAMPLE

COMBS Consulting Group technology & security
6200 B-10 West, Ste. 103 Phone: 210-696-7867
San Antonio, Texas 78230

PROJECT NAME:
CITY OF SAN ANTONIO
STRUCTURED CABLING INFRASTRUCTURE STANDARDS

DATE: 03-04-14

SHEET: 7
SCALE: As Shown

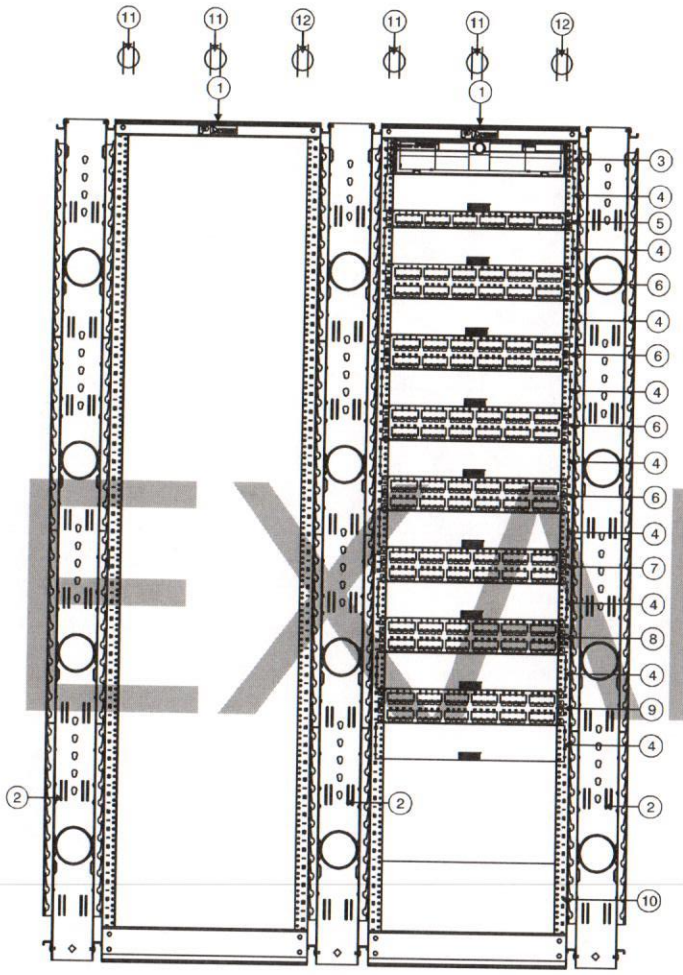

1 / xx Typical IDF Cabinet Elevation

SCALE: 1"=1'-0"

TYPICAL IDF ROOM CABINET ELEVATION KEYED NOTES

1. 27.6 – INCH X 84.6 – INCH TERAFRAME CABINET. (BY DIV. 27)
2. TERAFRAME DOUBLE – SIDED VERTICAL FINGER CABLE MANAGER. (BY DIV. 27)
3. RACK MOUNTED 48 – PORT FIBER OPTIC ENCLOSURE FOR SINGLE MODE FIBER OPTIC CABLE. (BY DIV. 27)
4. DOUBLE–SIDED HORIZONTAL CABLE MANAGER. (BY DIV. 27)
5. RACK MOUNTED 24 – PORT VOICE PATCH PANEL. (BY DIV. 27)
6. RACK MOUNTED 48 – PORT CATEGORY 6 PATCH PANEL FOR DATA. (BY DIV. 27)
7. RACK MOUNTED 48 – PORT CATEGORY 6 PATCH PANEL FOR WIRELESS ACCESS POINTS. (BY DIV. 27)
8. RACK MOUNTED 48 – PORT CATEGORY 6 PATCH PANEL FOR AUDIO VISUAL SYSTEMS. (BY DIV. 27)
9. RACK MOUNTED 48 – PORT CATEGORY 6 PATCH PANEL FOR IP SECURITY. (BY DIV. 27)
10. (4) RACK MOUNTED UNITS OF SPACE FOR OWNER PROVIDED / OWNER INSTALLED UPS. (BY DIV. 27)
11. DEDICATED 208 VAC 20 AMP CIRCUIT IN J–BOX MOUNTED TO UNISTRUT ABOVE THE LADDER RACK AND PROVIDED WITH A 7 – FT SO TYPE CORD WITH FEMALE NEMA L6 – 20R RECEPTACLE ON THE END. (BY DIV. 26)
12. DEDICATED 120 VAC 20 AMP CIRCUIT IN J–BOX MOUNTED TO UNISTRUT ABOVE THE LADDER RACK AND PROVIDED WITH A 7 – FT SO TYPE CORD WITH FEMALE NEMA 5 – 20R RECEPTACLE ON THE END. (BY DIV. 26)

EXAMPLE

COMBS Consulting Group technology & security
8200 IH-10 West, Ste. 103 Phone: 210-698-7587
San Antonio, Texas 78230

PROJECT NAME:
CITY OF SAN ANTONIO
STRUCTURED CABLING INFRASTRUCTURE STANDARDS

DATE: 03-04-14

SHEET: 8

SCALE: As Shown

1 CATEGORY 3 25-PAIR PLENUM

2 ARMORED SINGLE MODE 24-STRAND PLENUM

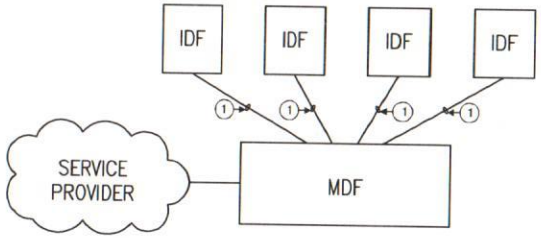

2/xx Single Stand-Alone Building Copper Topology Diagram

SCALE: N.T.S.

EXAMPLE

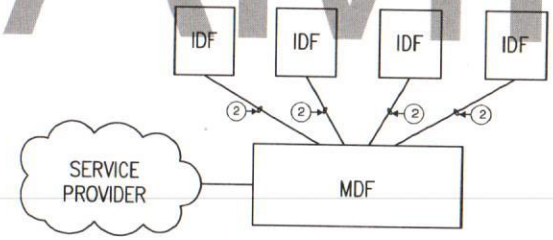

1/xx Single Stand-Alone Building Fiber Topology Diagram

SCALE: N.T.S.

COMBS Consulting Group technology & security 8200 B-10 West, Ste. 103 Phone: 210-696-7887 San Antonio, Texas 78230	PROJECT NAME: CITY OF SAN ANTONIO STRUCTURED CABLING INFRASTRUCTURE STANDARDS	DATE: 03-04-14	SHEET: 9 SCALE: As Shown

1 CATEGORY 3 25-PAIR PLENUM

2 ARMORED SINGLE MODE 24-STRAND PLENUM

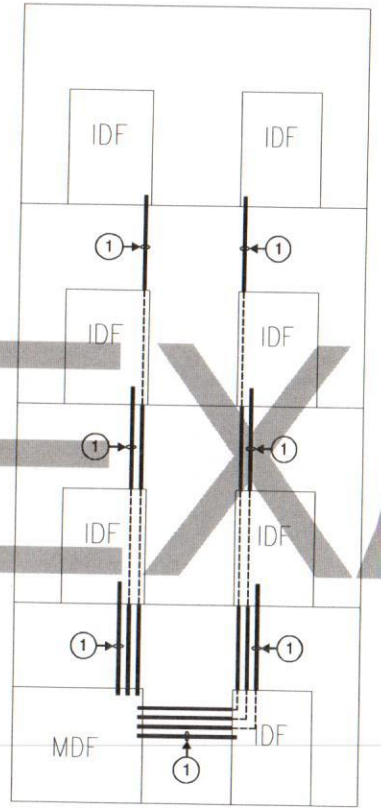

1/xx Single Stand-Alone Building Copper Riser Diagram

SCALE: N.T.S.

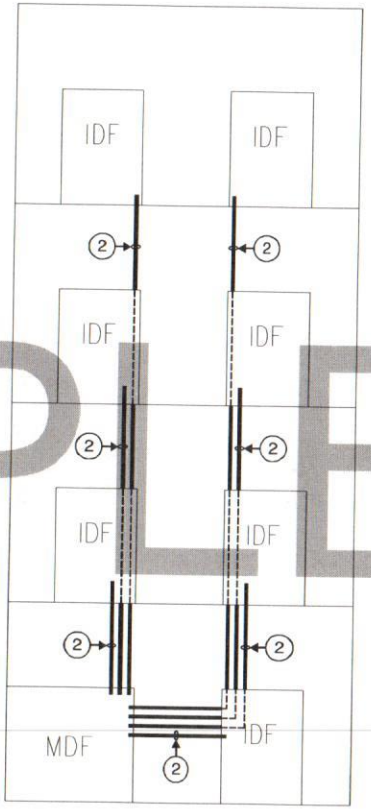

2/xx Single Stand-Alone Building Fiber Riser Diagram

SCALE: N.T.S.

EXAMPLE

COMBS Consulting Group technology & security
8200 IH-10 West, Ste. 103 Phone: 210-696-7987
San Antonio, Texas 78230

PROJECT NAME:

CITY OF SAN ANTONIO
STRUCTURED CABLING INFRASTRUCTURE STANDARDS

DATE: 03-04-14

SHEET: 10

SCALE: As Shown

1. CATEGORY 3 25-PAIR OSP
2. CATEGORY 3 25-PAIR PLENUM
3. ARMORED SINGLE MODE 48-STRAND INDOOR/OUTDOOR
4. ARMORED SINGLE MODE 24-STRAND PLENUM

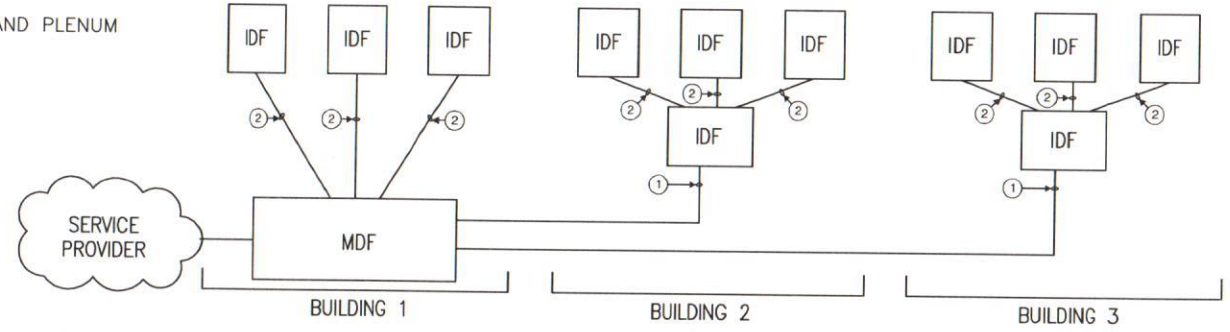

1/xx Campus Copper Topology Diagram

SCALE: N.T.S.

EXAMPLE

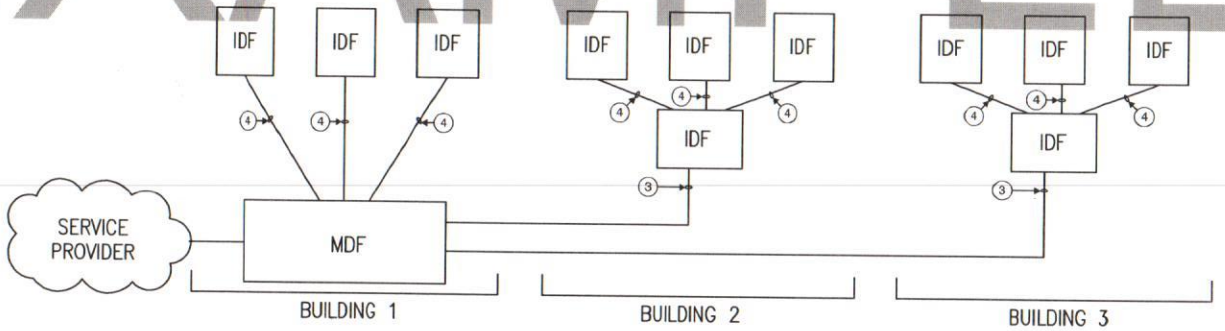

2/xx Campus Fiber Topology Diagram

SCALE: N.T.S.

COMBS Consulting Group technology & security 6200 B-10 West, Ste. 103 San Antonio, Texas 78230 Phone: 210-696-7887	PROJECT NAME: CITY OF SAN ANTONIO STRUCTURED CABLING INFRASTRUCTURE STANDARDS	DATE: 03-04-14	SHEET: 11 SCALE: As Shown

1 CATEGORY 3 25-PAIR OSP
2 CATEGORY 3 25-PAIR PLENUM
3 ARMORED SINGLE MODE 48-STRAND INDOOR/OUTDOOR
4 ARMORED SINGLE MODE 24-STRAND PLENUM

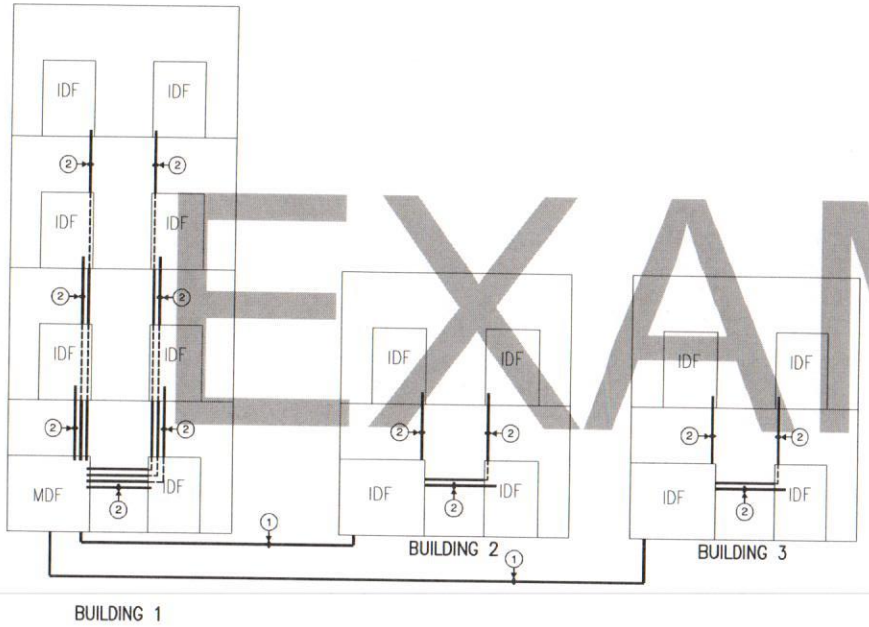

1 xx Campus Copper Riser Diagram
SCALE: N.T.S.

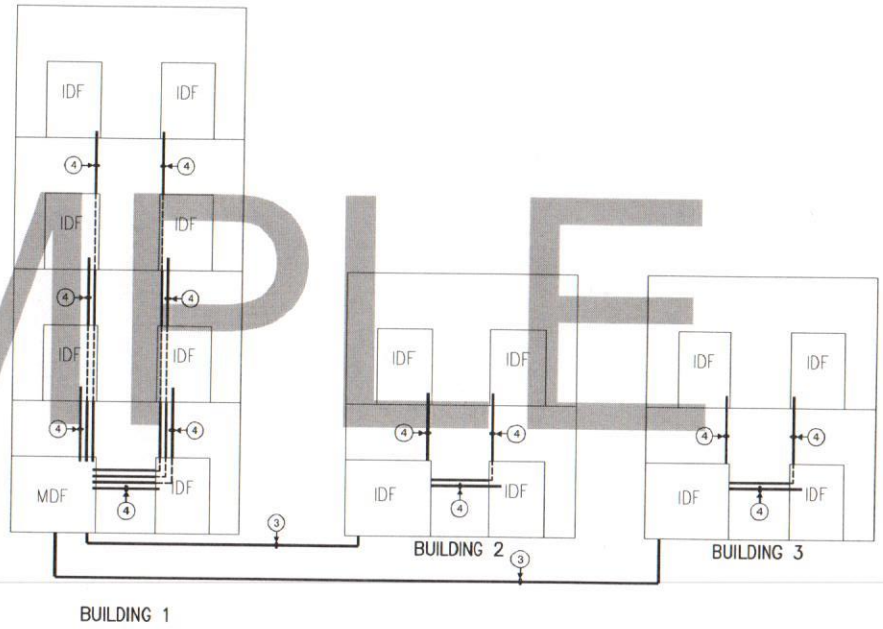

2 xx Campus Fiber Riser Diagram
SCALE: N.T.S.

EXAMPLE

COMBS Consulting Group technology & security
6200 B-10 West, Ste. 103 Phone: 210-696-7887
San Antonio, Texas 78230

PROJECT NAME:
CITY OF SAN ANTONIO
STRUCTURED CABLING INFRASTRUCTURE STANDARDS

DATE: 03-04-14
SHEET: 12
SCALE: As Shown

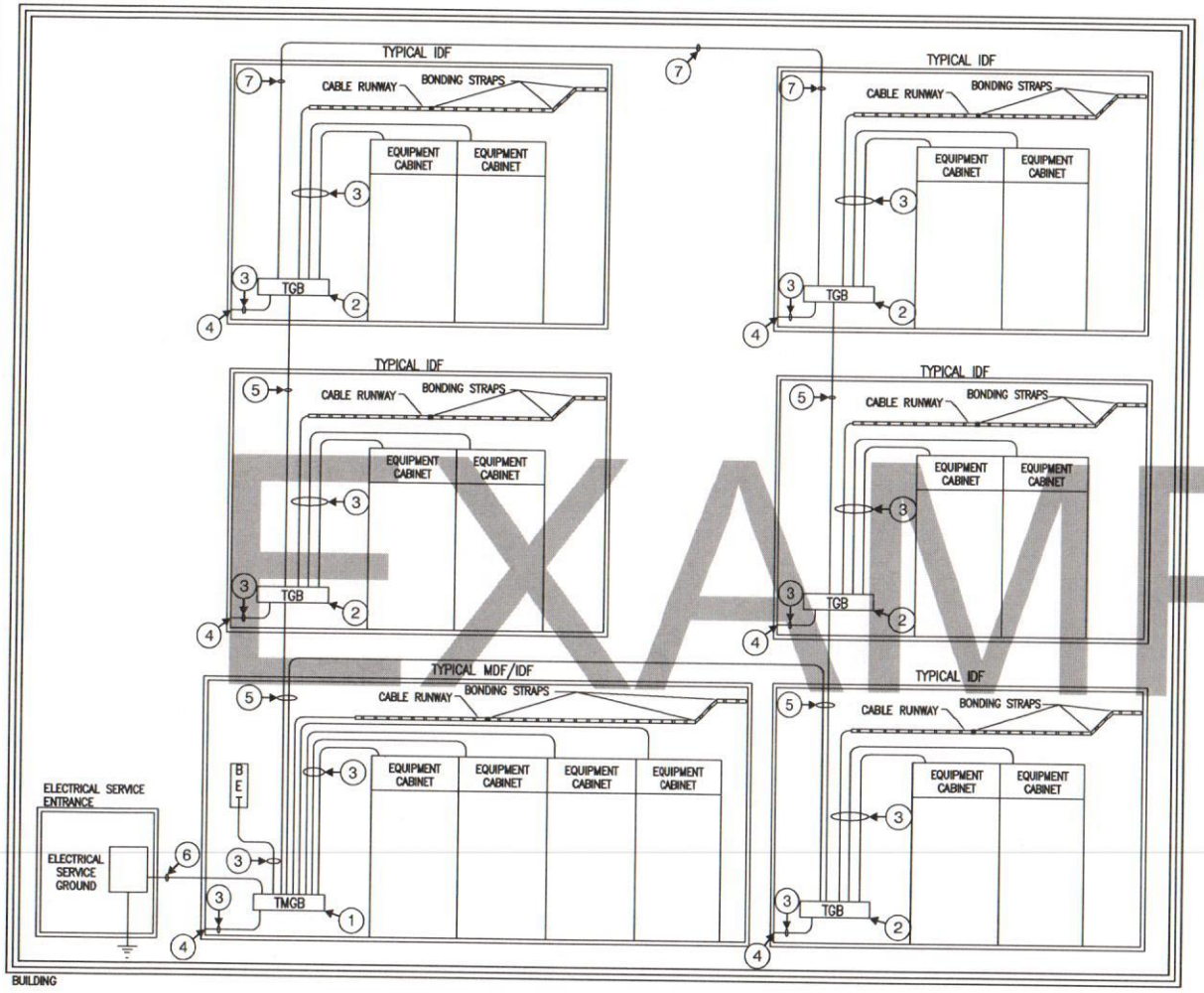

1. TELECOMMUNICATIONS MAIN GROUNDING BUS BAR (TMGB)
2. TELECOMMUNICATIONS GROUNDING BUS BAR (TGB)
3. TELECOMMUNICATIONS BONDING CONDUCTOR (TBC)
4. CONNECT TO GROUNDED BUILDING STEEL WHEN EXPOSED IN ROOM.
5. TELECOMMUNICATIONS BONDING BACKBONE (TBB)
6. TELECOMMUNICATIONS BONDING CONDUCTOR (TBC) BY ELECTRICAL CONTRACTOR
7. GROUNDING EQUALIZER CONDUCTOR (GEC)

TBB/GE linear length m (ft)	TBB/GE size (AWG)
less than 4 (13)	6
4 – 6 (14 – 20)	4
6 – 8 (21 – 26)	3
8 – 10 (27 – 33)	2
10 – 13 (34 – 41)	1
13 – 16 (42 – 52)	1/0
16 – 20 (53 – 66)	2/0
20 – 26 (67 – 84)	3/0
26 – 32 (85 – 105)	4/0
32 – 38 (106 – 125)	250 kcmil
38 – 46 (126 – 150)	300 kcmil
46 – 53 (151 – 175)	350 kcmil
53 – 76 (176 – 250)	500 kcmil
76 – 91 (251 – 300)	600 kcmil
Greater than 91 (301)	750 kcmil

EXAMP

1 / XX Typical Grounding Diagram

SCALE: N.T.S.

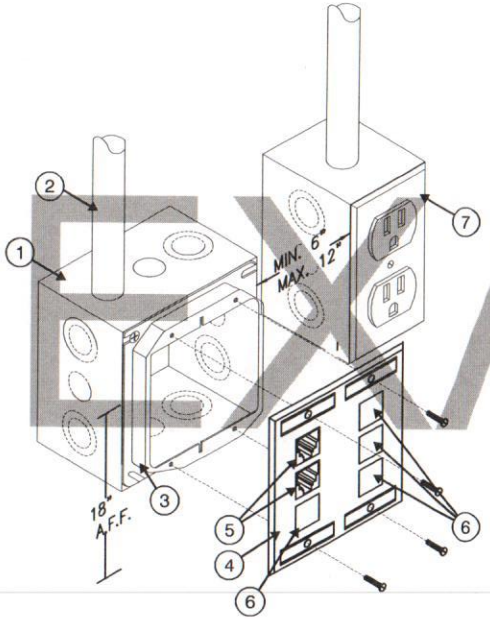

1. 4 11/16" x 4 11/16" x 2 1/8" RECESSED DOUBLE GANG BOX (BY DIV 26)
2. 1-INCH EMT CONDUIT FROM DOUBLE GANG BOX WITH 200 LBS PULL STRING AND NYLON BUSHING STUBBED OUT ABOVE ACCESSIBLE CEILING (BY DIV 26)
3. DOUBLE GANG PLASTER RING (BY DIV 26)
4. DOUBLE GANG WALL PLATE WITH DESIGNATION IN WINDOW (BY DIV 27)
5. DATA INSERT (BY DIV 27)
6. BLANK INSERT (BY DIV 27)
7. ELECTRICAL RECEPTACLE, GANG BOX AND CONDUIT SHOWN FOR REFERENCE ONLY (REFER TO DIV 26)

EXAMPLE

1/xx TYPCIAL OFFICE WORKSTATION CONFIGURATION

SCALE: N.T.S.

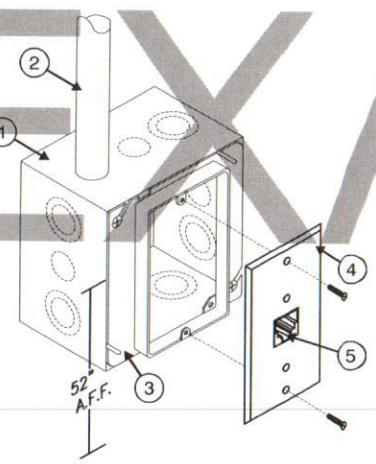

1. 4 11/16" x 4 11/16" x 2 1/8" RECESSED DOUBLE GANG BOX (BY DIV 26)
2. 1-INCH EMT CONDUIT FROM DOUBLE GANG BOX WITH 200 LBS PULL STRING AND NYLON BUSHING STUBBED OUT ABOVE ACCESSIBLE CEILING (BY DIV 26)
3. SINGLE GANG PLASTER RING (BY DIV 26)
4. SINGLE GANG WALL PLATE (BY DIV 27)
5. DATA INSERT (BY DIV 27)

EXAMPLE

1/xx TYPCIAL WALL PHONE CONFIGURATION

SCALE: N.T.S.

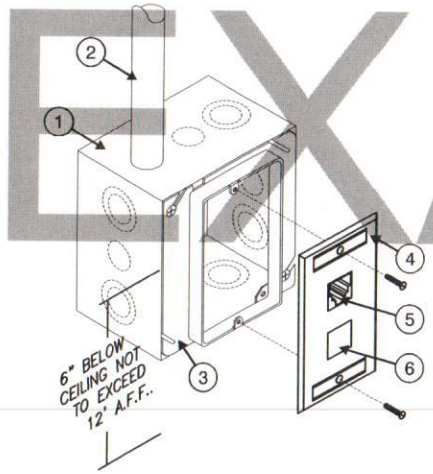

1. 4 11/16" x 4 11/16" x 2 1/8" RECESSED DOUBLE GANG BOX (BY DIV 26)
2. 1-INCH EMT CONDUIT FROM DOUBLE GANG BOX WITH 200 LBS PULL STRING AND NYLON BUSHING STUBBED OUT ABOVE ACCESSIBLE CEILING (BY DIV 26)
3. SINGLE GANG PLASTER RING (BY DIV 26)
4. SINGLE GANG WALL PLATE (BY DIV 27)
5. DATA INSERT (BY DIV 27)
6. BLANK INSERT (BY DIV 27)

EXAMPLE

1/xx TYPICAL WALL MOUNTED IP CAMERA/WIRELESS ACCESS POINT CONFIGURATION

SCALE: N.T.S.

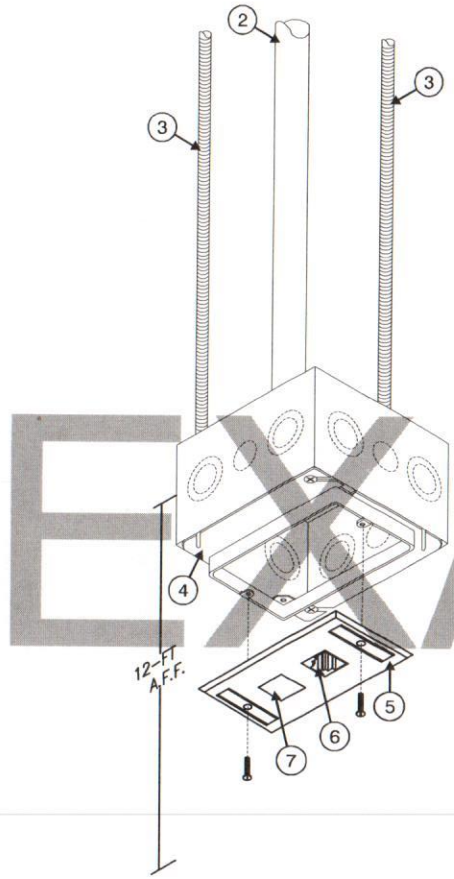

EXAMPLE

1. 4 11/16" x 4 11/16" x 2 1/8" RECESSED DOUBLE GANG BOX (BY DIV 26)
2. 1–INCH EMT CONDUIT FROM DOUBLE GANG BOX WITH 200 LBS PULL STRING AND NYLON BUSHING STUBBED OUT AT BUILDING STRUCTURE (BY DIV 26)
3. ALL THREAD TO BUILDING STRUCTURE.
4. SINGLE GANG PLASTER RING (BY DIV 26)
5. SINGLE GANG WALL PLATE (BY DIV 27)
6. DATA INSERT (BY DIV 27)
7. BLANK INSERT (BY DIV 27)

1/xx TYPICAL STRUCTURE MOUNTED IP CAMERA/WIRELESS ACCESS POINT CONFIGURATION

SCALE: N.T.S.

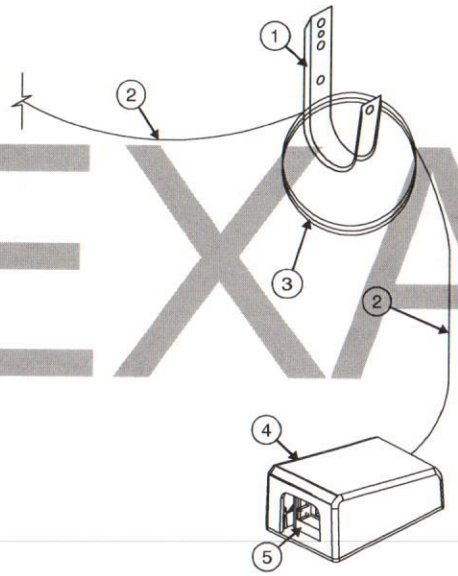

1. J-HOOK ABOVE ACCESSIBLE CEILING (BY DIV 27)
2. DATA CABLE ABOVE ACCESSIBLE CEILING (BY DIV 27)
3. 20-FEET SERVICE LOOP ABOVE ACCESSIBLE CEILING NEATLY COILED AND SECURED TO J-HOOK (BY DIV 27)
4. SURFACE MOUNT BOX ABOVE ACCESSIBLE CEILING AND SECURED TO BUILDING STRUCTURE. (BY DIV 27)
5. DATA INSERT (BY DIV 27)

EXAMPLE

1/XX TYPICAL ABOVE ACCESSIBLE CEILING DATA OUTLET

SCALE: N.T.S.

COMBS Consulting Group technology & security
6200 W-10 West, Ste. 103 Phone: 210-496-7887
San Antonio Texas 78230

PROJECT NAME:
CITY OF SAN ANTONIO
STRUCTURED CABLING INFRASTRUCTURE STANDARDS

DATE: 03-04-14

SHEET: 18
SCALE: As Shown

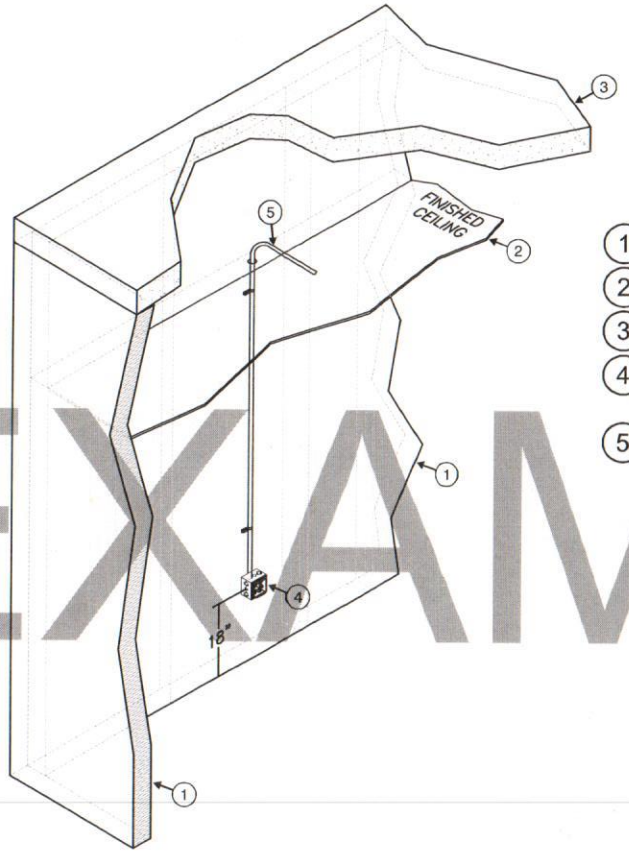

KEYED NOTES:

1. SCHEDULED WALL.
2. SCHEDULED CEILING.
3. SCHEDULED DECK ABOVE.
4. 4 11/16" x 4 11/16" x 2 1/8" RECESSED DOUBLE GANG BOX WITH DOUBLE GANG PLASTER RING (BY DIV 26)
5. 1-INCH EMT CONDUIT FROM DOUBLE GANG BOX WITH 200 LBS PULL STRING AND NYLON BUSHING STUBBED OUT ABOVE ACCESSIBLE CEILING IN THE SAME ROOM WHERE THE DEVICE IS LOCATED. IF THE ROOM WHERE THE DEVICE IS LOCATED DOES NOT HAVE AN ACCESSIBLE CEILING, THE CONDUIT SHALL ROUTE TO THE NEAREST ACCESSIBLE CEILING OFF OF A MAIN CORRIDOR. CONDUIT PATHWAY SHALL TAKE THE SHORTEST ROUTE TO THE APPLICABLE MDF/IDF ROOM TO MINIMIZE THE CABLE LENGTH. (BY DIV 26)

EXAMPLE

1/xx TYPICAL TECHNOLOGY CONDUIT ROUGH-IN

SCALE: N.T.S.

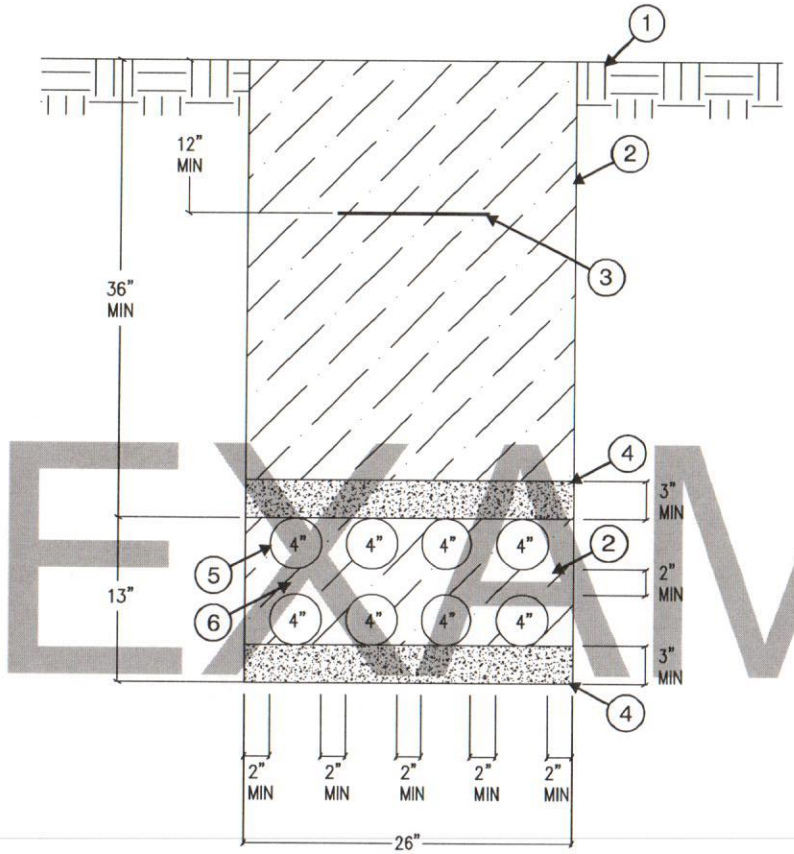

1. FINISHED GRADE
2. SELECT COMPACTED BACKFILL
3. DETECTABLE WARNING TAPE
4. COMPACTED SAND
5. COMMUNICATIONS CONDUIT
6. DUCT SPACERS (TYPICAL BETWEEN ALL CONDUITS)

EXAMPLE

1/xx TYPICAL COMMUNICATIONS DUCT BANK DETAIL - (8) 4-INCH CONDUITS

SCALE: N.T.S.

COMBS Consulting Group technology & security
6200 B-10 West, Ste. 103 Phone: 210-685-7987 San Antonio, Texas 78230

PROJECT NAME:
CITY OF SAN ANTONIO
STRUCTURED CABLING INFRASTRUCTURE STANDARDS

DATE: 03-04-14

SHEET: 20

SCALE: As Shown

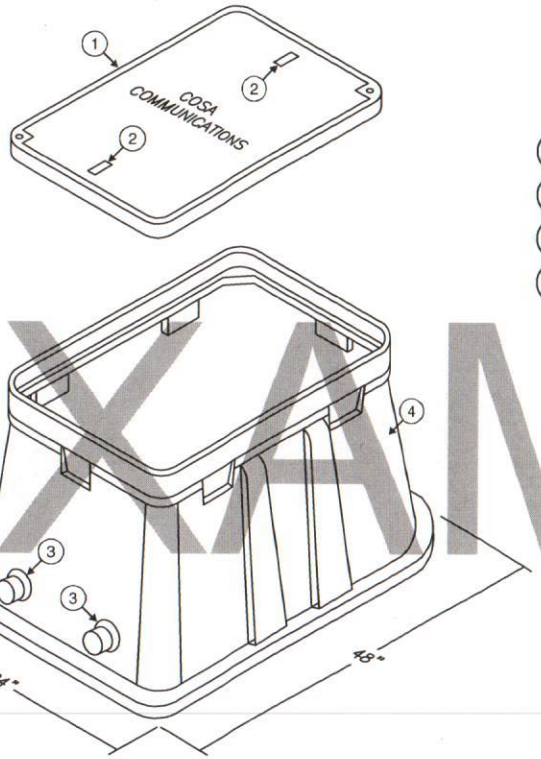

KEYED NOTES:

1. 40-INCH X 18-INCH H20 COVER.
2. LIFTING EYE.
3. 4-INCH TERMINATOR.
4. 48-INCH LONG X 24-INCH WIDE X 30-INCH DEEP H20 RATED HANDHOLE.

EXAMPLE

1 / xx TYPICAL TECHNOLOGY HANDHOLES (HH)

SCALE: N.T.S.

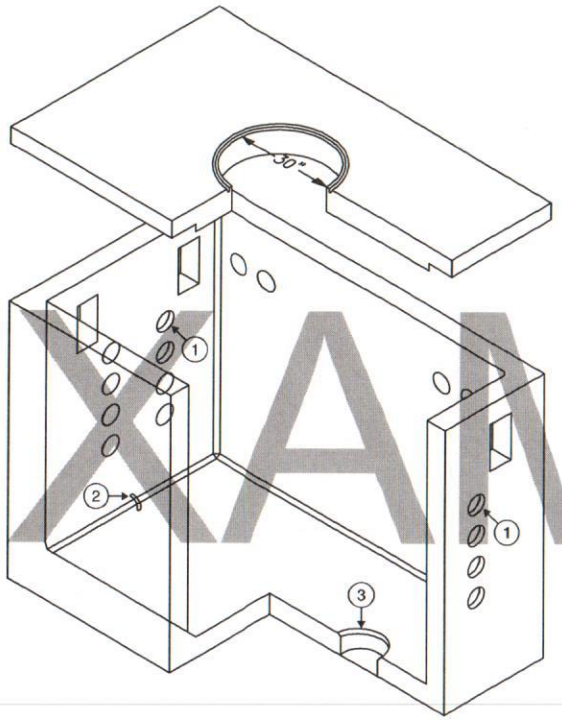

KEYED NOTES:

1. PRE CAST 4-INCH TERMINATORS.
2. PULLING EYES (ONE AT EACH END).
3. 13-INCH SUMP WITH GRATE.

EXAMPLE

1/xx TYPICAL TECHNOLOGY MAINTENANCE HOLES (MH)

SCALE: N.T.S.

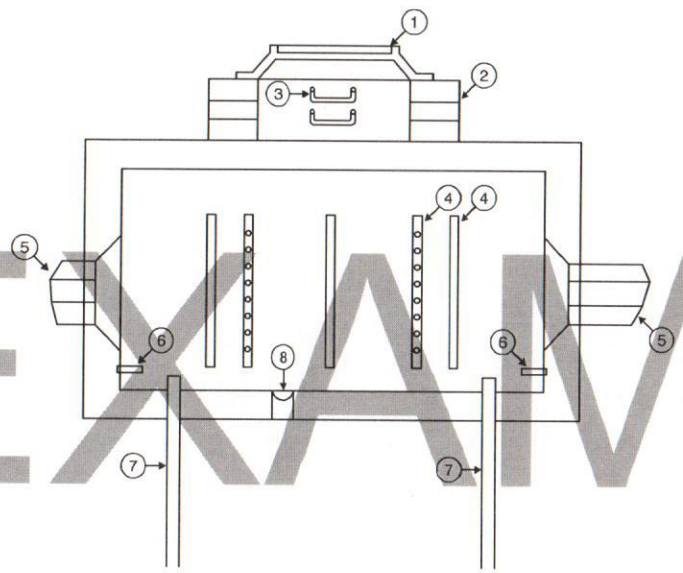

KEYED NOTES:

1. H-2O RATED COVER.
2. PRE CAST COLLAR.
3. STEPS (AS REQUIRED).
4. CABLE RACKS.
5. 4-INCH DUCTS.
6. PULLING EYES.
7. 3/4-INCH X 10-FT. GROUND ROD.
8. 13-INCH SUMP WITH GRATE.

EXAMPLE

1/xx TYPICAL TECHNOLOGY MAINTENANCE HOLES (MH)

SCALE: N.T.S.

COMBS Consulting Group technology & security
8200 IH-10 West, Ste. 103 Phone: 210-696-7987
San Antonio, Texas 78230

PROJECT NAME:
CITY OF SAN ANTONIO
STRUCTURED CABLING INFRASTRUCTURE STANDARDS

DATE: 03-04-14

SHEET: 23

SCALE: As Shown

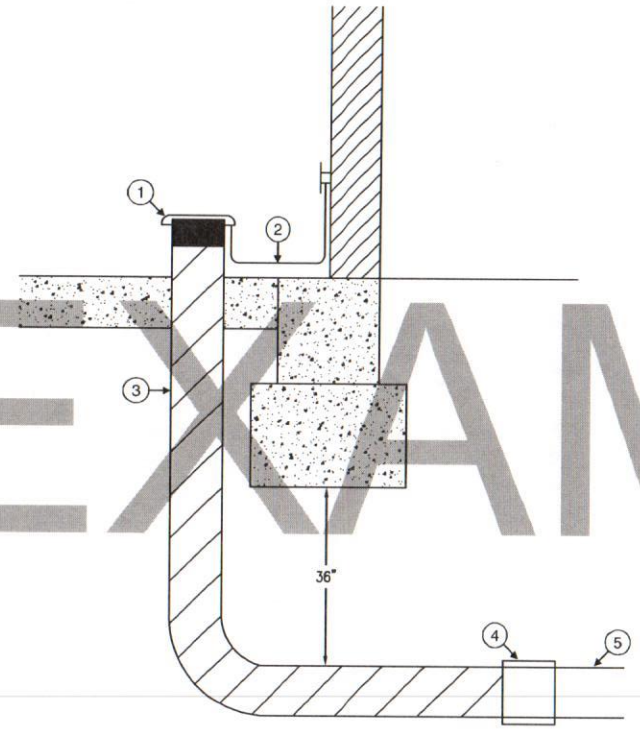

KEYED NOTES:

1. GROUNDING BUSHING.
2. #6 GROUND WIRE TO TMGB/TGB.
3. 4-INCH RIGID STEEL CONDUIT WRAPPED WITH PASCO PROTECTIVE TAPE SYSTEM.
4. PVC FEMALE ADAPTER.
5. SCHEDULE 40 PVC.

EXAMPLE

1/xx TYPICAL TECHNOLOGY DUCT ENTRY INTO BUILDING

SCALE: N.T.S.

EXAMPLE

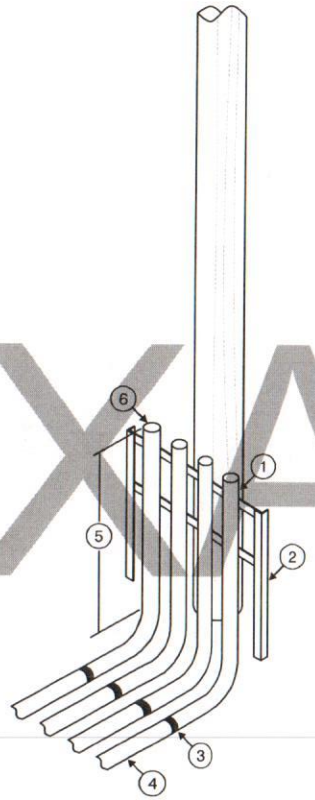

KEYED NOTES:

1. 4-INCH RIGID STEEL CONDUIT WRAPPED WITH PASCO PROTECTIVE TAPE SYSTEM.
2. UNISTRUT RACKING CONSTRUCTED IN FIELD.
3. PVC FEMALE ADAPTER.
4. 4-INCH SCHEDULE 40 PVC CONDUIT.
5. 4-INCH RIGID STEEL CONDUIT SHALL BE EXTENDED 36 INCHES ABOVE GRADE.
6. CONDUITS SHALL BE CAPPED AND SEALED TO PREVENT MOISTURE AND DEBRIS FROM ENTERING CONDUITS.

1/XX TYPICAL POLE RISER

SCALE: N.T.S.

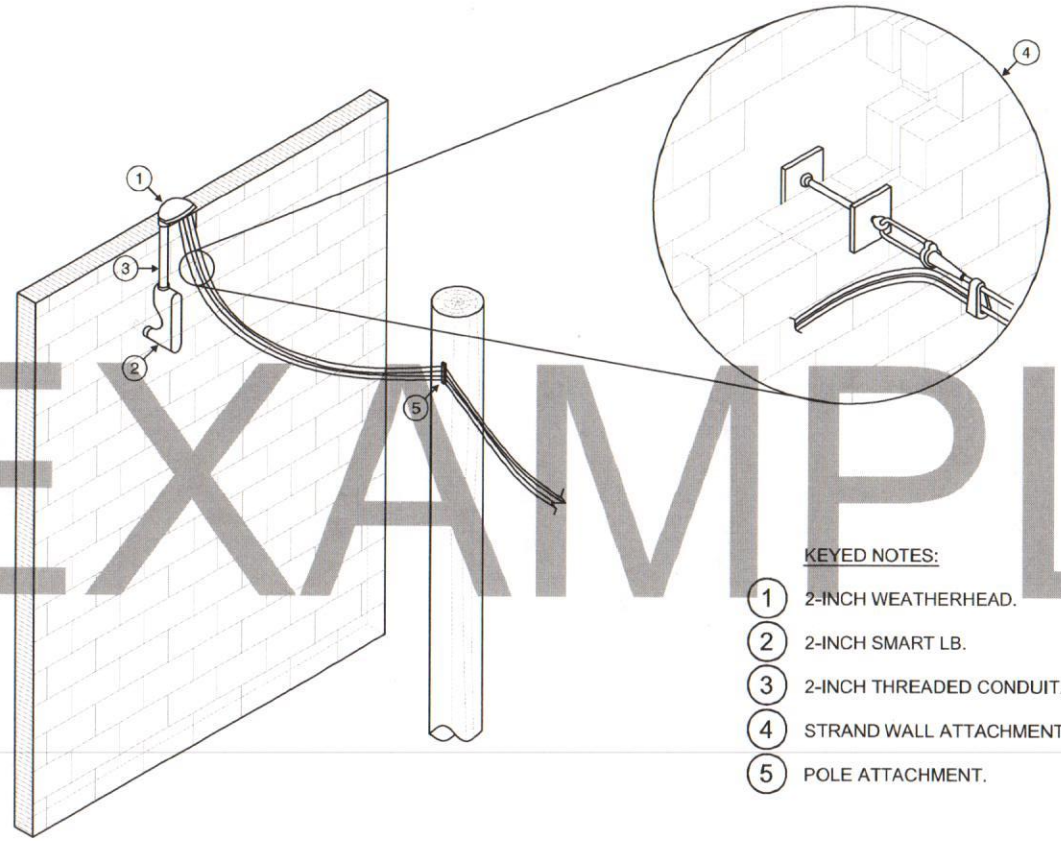

EXAMPLE

KEYED NOTES:

1. 2-INCH WEATHERHEAD.
2. 2-INCH SMART LB.
3. 2-INCH THREADED CONDUIT.
4. STRAND WALL ATTACHMENT.
5. POLE ATTACHMENT.

1/XX TYPICAL AERIAL BUILDING ENTRANCE

SCALE: N.T.S.

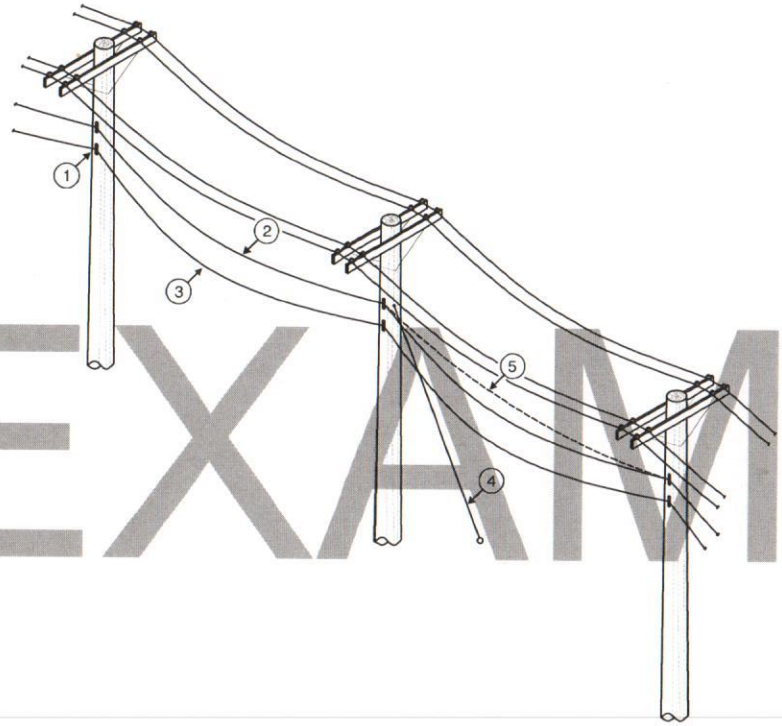

KEYED NOTES:

1. TYPICAL POLE ATTACHMENT.
2. FIBER LASHED TO MESSENGER.
3. COPPER LASHED TO MESSENGER.
4. DOWN-GUY AS REQUIRED BY POLE OWNER.
5. CABLE SAG CALCULATED ON SPAN LENGTH AND CABLE TYPE.

EXAMPLE

1/xx TYPICAL AERIAL SPAN

SCALE: N.T.S.

COMBS Consulting Group technology & security 6209 B - 10 West, Ste. 103 Phone : 210-499-7987 San Antonio, Texas 78230	PROJECT NAME: CITY OF SAN ANTONIO STRUCTURED CABLING INFRASTRUCTURE STANDARDS	DATE: 03-04-14	SHEET: 27 SCALE: As Shown

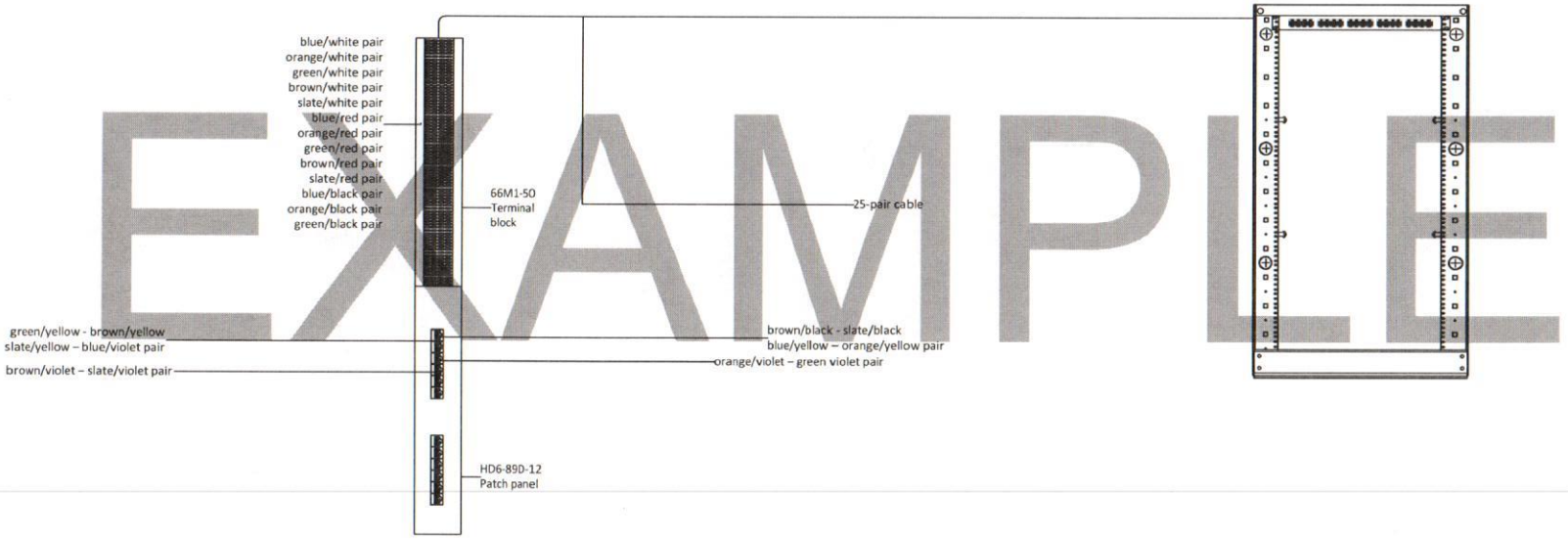

EXAMPLE

1
xx

TYPICAL TELCO DEMARCATION CABLE TERMINATION DETAIL

SCALE: N.T.S.

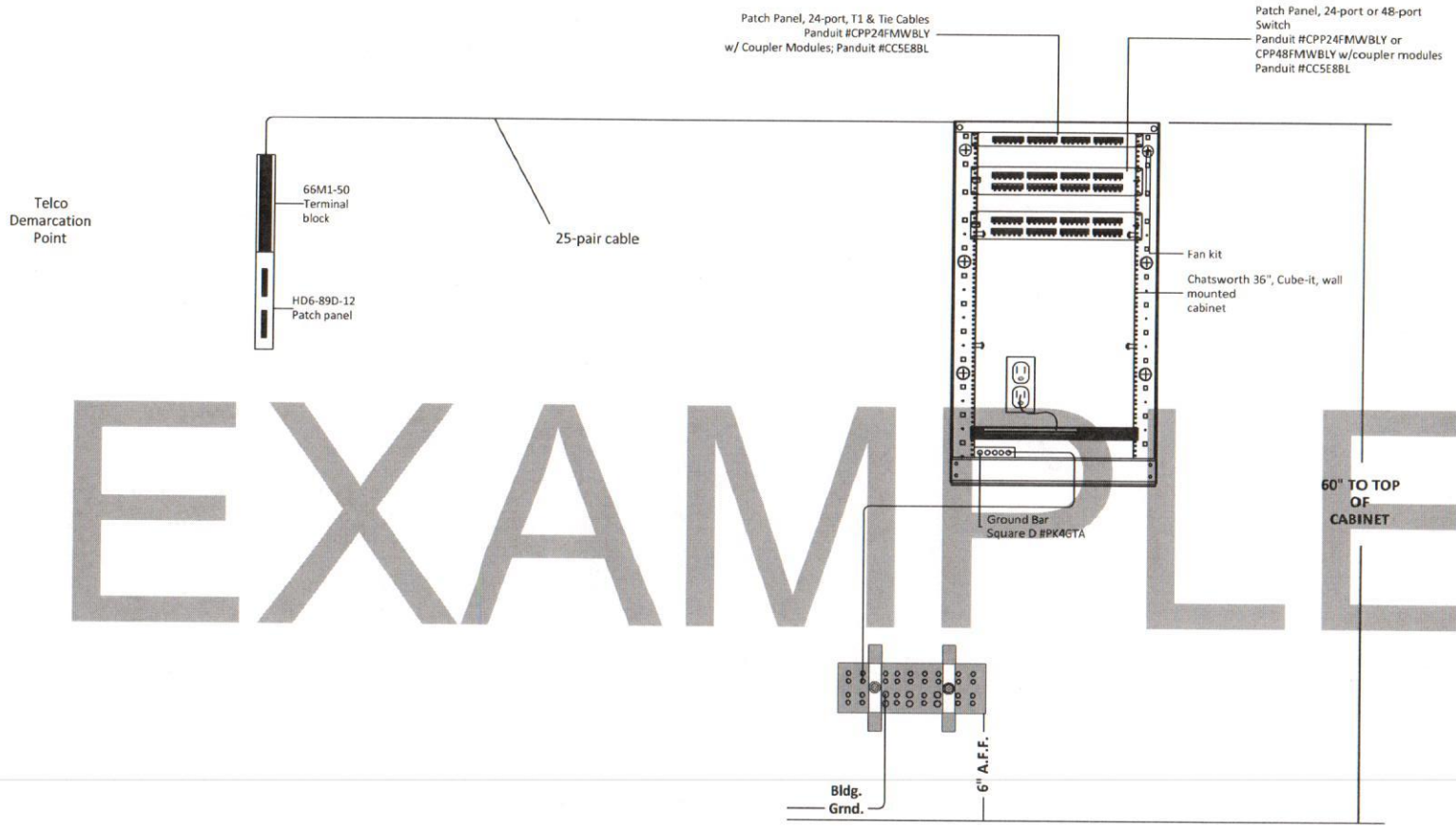

EXAMPLE

1
xx

TYPICAL CHATSWORTH CUBE-IT INSTALLATION

SCALE: N.T.S.

COMBS Consulting Group technology & security
6200 IH-10 West, Ste. 103 Phone: 210-699-7987
San Antonio, Texas 78230

PROJECT NAME:

CITY OF SAN ANTONIO
STRUCTURED CABLING INFRASTRUCTURE STANDARDS

DATE: 03-04-14

SHEET: 29

SCALE: As Shown