GENERAL NOTES: (THIS DETAIL ONLY)

1. SERVICE EQUIPMENT INSTALLATION TO BE INSTALLED PER CPS ENERGY STANDARDS.
2. CONDUIT LINES SHOWN ON DRAWING ARE DIAGRAMMATIC. CONTRACTOR SHALL VERIFY FIELD CONDITIONS AND CHOOSE APPROPRIATE CONDUIT ROUTING. IN THE EVENT THAT APPROXIMATE CONDUIT ROUTING SHOWN ON PLANS IS NOT FEASIBLE, CONTRACTOR SHALL NOTIFY ARCHITECT/ENGINEER.
3. ALL EXTERIOR PANELS AND DISCONNECT SWITCHES SHALL BE PADLOCKED FOR SECURITY PURPOSES.

KEYED NOTES: (DETAIL NO. 1 ONLY)

1. NEW 3/4" x 10' COPPER CLAD GROUND ROD.
2. NEW ELECTRICAL PANEL 'A' SERVING BUILDING. REFER TO DETAIL 1, SHEET E2.1 FOR LOCATION OF PANEL.
3. PROVIDE NEW 1-CHANNEL TIME CLOCK FOR LIGHTING CONTROL. LIGHTING CONTROL TO BE PHOTOCELL 'ON' AND TIMECLOCK 'OFF'. REFER TO DETAIL 3, SHEET E3.0.
4. PROVIDE A 100A/1P/3W, NEMA 3R ENCLOSED, 100A RK5 FUSIBLE, MAIN DISCONNECT SWITCH. COORDINATE MOUNTING HEIGHT AND EXACT LOCATION AT FIELD SITE.
5. PROVIDE A PHOTOELECTRIC PHOTOCELL AND MOUNT ON ROOF. AIM TO NORTH SKY.
6. 1#6 GND. IN 3/4" RGS CONDUIT. PROVIDE CALWELDED CONNECTION BETWEEN GROUNDING ELECTRODE AND GROUND ROD.
7. SERVICE METER PROVIDED BY CPS ENERGY AND INSTALLED BY CONTRACTOR.

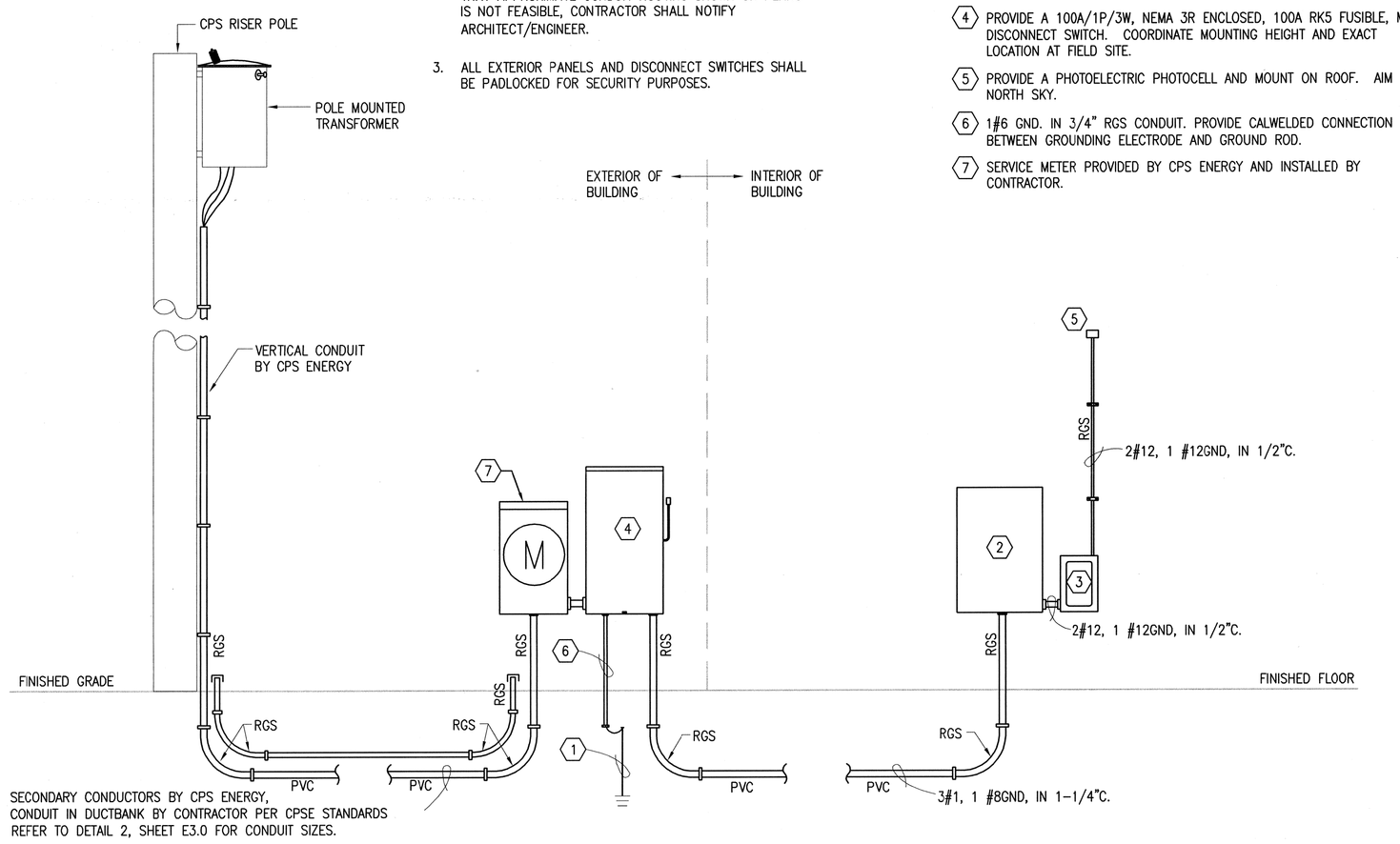

SECONDARY CONDUCTORS BY CPS ENERGY, CONDUIT IN DUCTBANK BY CONTRACTOR PER CPSE STANDARDS REFER TO DETAIL 2, SHEET E3.0 FOR CONDUIT SIZES.

1 / E3.0 ELECTRICAL RISER DIAGRAM

SCALE: NOT-TO-SCALE

LIGHTING FIXTURE SCHEDULE

TYPE	LAMPS	MOUNTING	MOUNT HEIGHT	VOLTS	WATTS	DESCRIPTION	MANUFACTURER AND CATALOG NO.
A	1-150W INCAND.	WALL	PER ARCH. ELEVATIONS	120	150W	ARM MOUNTED INCANDESCENT TYPE LAMP. ALUMINUM TYPE ARM AND POLYCARBONATE LENS.	APPLETON ELECTRIC F2-21 VGA
B	2-32W T8	WALL	PER ARCH. PLANS	120	64W	1X4 FLUORESCENT WALL MOUNTED LIGHTING FIXTURE. IMPACT RESISTANT HOUSING, HIGH IMPACT ACRYLIC DIFFUSER. WET AND DAMP CONDITIONS. T8 TYPE FLUOESCENT LAMPS.	LITHONIA LIGHTING DMW 2 32 AR 120 GEB10IS
C	1-100W MH	WALL	PER ARCH. ELEVATIONS	120	130W	ANGLED REFLECTOR, GOOSENECK LIGHTING FIXTURE. FIXED HUB TAPPED FOR 3/4" NPT CONDUIT. HEAVY DUTY, SPUN GALVANIZED STEEL CONSTRUCTED REFLECTOR. MEDIUM BASED POCELAIN SOCKET.	ABOLITE LIGHTING AD 200 CFL 120 GBK LDS96WL PG3 GOOSENECK & WALL BRACKET
						3/4" SINGLE REFLECTOR GOOSENECK WALL BRACKET. RIGID CONDUIT AND CAST WALL PLATE WHICH FITS 4" OCTAGONAL BOX.	ABOLITE LIGHTING GB A 3 GWT
D	1-175 MH	WALL	PER ARCH ELEVATIONS	120	213W	RUGGED DIE-CAST, SINGLE PIECE ALUMINUM HOUSING. U.L. LISTED AND SUITABLE FOR WET CONDITIONS. WIDE THROW LAMP CONFIGURATION.	LITHONIA LIGHTING MRW 175M WT 120 LPI
E	1-32W TRIPLE COMPACT	WALL	PER ARCH ELEVATIONS	120	36W	CAST ALUMINUM, FULLY GASKETED AND SEALED LAMP CHAMBER WITH CLEAR TEMPERED GLASS ENCLOSURE. FABRICATED METAL FRONT SHIELD. U.L. LISTED FOR WET LOCATIONS.	VISA LIGHTING OW1742 1TF32 PTD
F	2-6W INCAND. LAMPS	WALL	ABOVE DOOR	120		DIE-CAST ALUMINUM HOUSING. MAINTENANCE-FREE LEAD-CALCIUM BATTERY. LOW-PROFILE, INTEGRATED TEST SWITCH.	LITHONIA LIGHTING AFN W
X	1-32W TRIPLE COMPACT	WALL	ABOVE DOOR	120	6W	SEALED, MAINTENANCE-FREE LEAD CALCIUM BATTERY STANDARD. UV-STABILIZED THERMAL HOUSING. SIDE-MOUNT LAMP HEADS.	LITHONIA LIGHTING LHQM S 1 120/277 N

PANELBOARD 'A'

PROJECT : MISSION DRIVE-IN MARQUEE REHABILITATION
PROJECT # : 0029-10
LOCATION : INTERIOR
NOTES :

MAIN CIRCUIT BREAKER : -
MAIN LUGS ONLY : 100-AMP
BUSSING : 100-AMP
VOLTAGE : 120/240V, 1-PH, 3-W
INTERRUPTING : 10 kAIC RMS SYM

ENCLOSURE : NEMA 1
MOUNTING : SURFACE
OCP TYPES : BOLT-ON CBs
PROVIDE : NEUTRAL BUS
GROUND BUS

0	RECPT	5	HEAT		
1	LTG	6	A/C		
2	EQUIP	7	KITCH		
3	MTR	8	ELEV		
4	COMP	9	125%		

CKT	AMPS	POLE	CIRCUIT DESCRIPTION	LOAD	TYPE	PH	TYPE	LOAD	CIRCUIT DESCRIPTION	AMPS	POLE	CKT
1	20	1	LIGHTING	600.0	1	A	1	128.0	LIGHTING	20	1	2
3	20	1	LIGHTING	750.0	1	B	1	256.0	LIGHTING	20	1	4
5	20	1	LIGHTING	650.0	1	A	1	426.0	LIGHTING	20	1	6
7	20	1	LIGHTING	84.0	1	B	1	194.0	LIGHTING	20	1	8
9	20	1	WATER SPRINKLER SYSTEM	200.0	0	A	0	200.0	TIMECLOCK	20	1	10
11	20	1	SPARE		1	B	1		SPARE	20	1	12
13	20	1	SPARE		1	A	1		SPARE	20	1	14
15	20	1	SPARE		1	B	1		SPARE	20	1	16

	PANEL VA	SUB FEED	FEED THRU	TOTAL CONN	TOTAL DEMAND VA	TOTAL DEMAND AMPS
PHASE A	1,804	0	0	1,804	2,255	19
PHASE B	1,006	0	0	1,006	1,258	10
TOTAL	2,810	0	0	2,810	3,513	15

NOTES :

REVISIONS:

CNG ENGINEERING, PLLC. R2.0

ELECTRICAL LOAD ANALYSIS

SYSTEM VOLTAGE - 240Y/120V, 1 PHASE, 3 WIRE + GND.

LOAD DESCRIPTION	LOAD TYPE	CONNECTED LOAD - KVA	DEMAND FACTOR	SEE NOTE	DEMAND LOAD KVA	DEMAND LOAD AMPERES
GP RECEPTACLES	0	0.0	0.00		0.0	0
LIGHTING	1	2.8	1.25	2, 3	3.5	15
EQUIPMENT	2	0.0	0.00		0.0	0
MOTORS	3	0.0	0.00		0.0	0
COMPUTERS	4	0.0	0.00		0.0	0
ELECTRIC HEATING	5	0.0	0.00		0.0	0
AIR CONDITIONING	6	0.0	0.00		0.0	0
KITCHEN EQUIPMENT	7	0.0	0.00		0.0	0
ELEVATORS	8	0.0	0.00		0.0	0
LARGEST MOTOR	9	0.0	0.00		0.0	0
N.E.C. DEMAND LOAD					3.5	15

NOTES:

1. PER NEC TABLE 220-13
2. PER NEC 215.2(a)(1)
3. PER NEC TABLE 220.3(a)
4. PER NEC 220-21
5. PER NEC TABLE 220-20
6. PER NEC TABLE 620-14
7. PER NEC 430-24

GENERAL NOTES (DETAILS NO. 2 ONLY):

1. PROVIDE CARLON, SNAP-LOC SPACERS ON 6'-0" CENTERS.
2. PROVIDE BEADED STRAP AND LOCKING KEY WAY FOR CONDUITS MOUNTED ON TOP OF SPACER RACK.
3. TOP OF CONCRETE CAP TO FINISHED GRADE SHALL BE A MINIMUM OF 24".
4. TOP OF CONCRETE MIX SHALL BE PAINTED RED.
5. ALL CONDUITS SHALL BE EB20-PVC
6. RUN #2/0 BARE COPPER GROUND CONTINUOUS IN DUCTBANK. BOND ALL METAL HARDWARE AND STEEL REINFORCEMENTS IN MANHOLES.

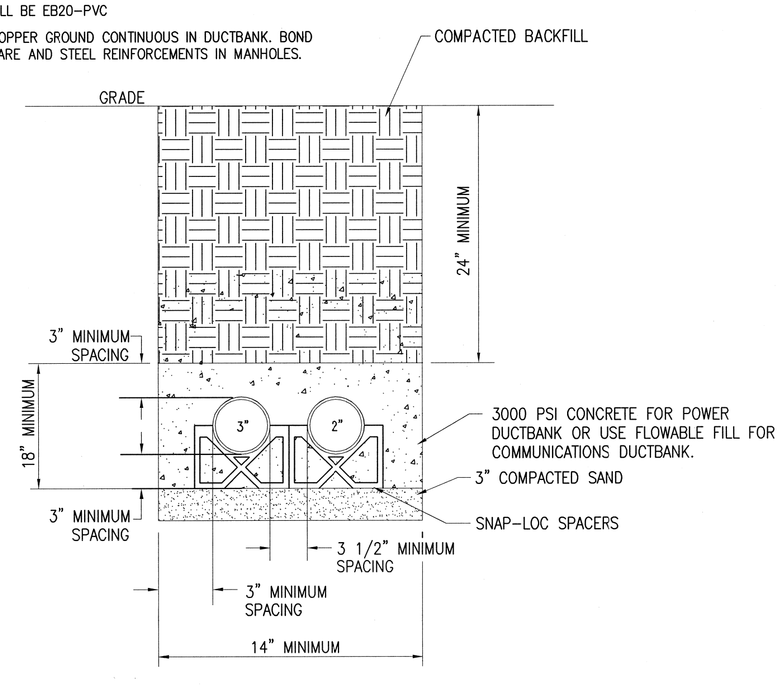

2 / E3.0 DUCTBANK DETAIL

SCALE: NOT-TO-SCALE

GENERAL NOTE: (DETAIL #3 ONLY)

1. INSTALL TIMECLOCK AND CONTACTOR ENCLOSURE IN NEMA 1 ENCLOSURE.

KEYED NOTES: (DETAIL #3 ONLY)

1. PROVIDE ONE (1) SIX POLE 30A, 600V RATED CONTACTOR WITH 120V RATED COILS IN A NEMA 1 ENCLOSURE.
2. PROVIDE 1 CHANNEL DIGITAL TIMECLOCK. TORK DZS200A OR EQUAL.

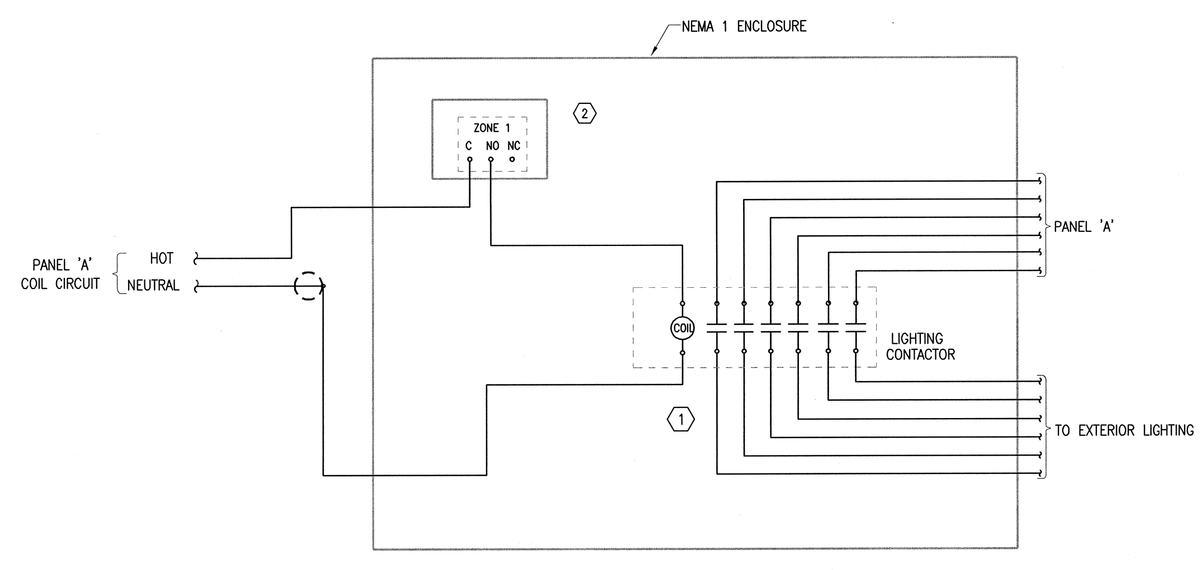

3 / E3.0 TYPICAL LIGHTING CONTROL DIAGRAM

SCALE: NOT-TO-SCALE

LOW VOLTAGE SHORT CIRCUIT CALCULATIONS

$$\text{TRANSFORMER AMP (120/240)} = \frac{5\ \text{KVA} \times 1000}{(120\text{V})(\ 2\ )} = 20.800\ \text{AMPS}$$

$$I = \frac{\text{TRANSFORMER AMPS}}{Z\ \%} = \frac{20.8}{5\%} = 416\ \text{AMPS}$$

MINIMUM AIC RATING = 10000

Beaty Palmer Architects, Inc.
110 Broadway
Suite 600
San Antonio, Texas 78205
voice 210.212.8022
fax 210.212.8018
www.beatypalmer.com

ARCHITECT

ENGINEER

STATE OF TEXAS
MIGUEL A. GARCIA
71024
LICENSED PROFESSIONAL ENGINEER
10-12-10
CNG ENGINEERING, PLLC.
REG. NO. F-7964

CONSULTANT

CNG engineering
1911 N. New Braunfels
San Antonio, Texas 78208
(210) 224-8841, FAX (210) 224-8824

REVISIONS

PROJECT

Mission Drive-In Marquee Rehabilitation

LOCATION

3100 Roosevelt Ave.
San Antonio, Tx.
78214

CLIENT

City of San Antonio, Texas

PROJECT NUMBER
0928

DRAWN BY
DRG

REVIEWED BY
MAG

DATE
10.12.10

SHEET NUMBER

E3.0

BEATY PALMER ARCHITECTS