LUNDY & FRANKE
ENGINEERING
140 HEIMER ROAD SUITE 360
SAN ANTONIO, TEXAS 78232
PH. (210)979-7900 FX. (210)979-7800

Job Title	TITLE1	By	DRAWN
	TITLE2	Ck.	CHECKED
	TITLE3	Date	DATE
Subject	SUBJECT1	File	FILE
	SUBJECT2	Job	JOB
	SUBJECT3	Sht.	SHT# of #SHTS

STATE OF TEXAS
CHARLES H. LUNDY
36983
LICENSED
PROFESSIONAL ENGINEER

ROOF JOIST DETAIL

SPAN

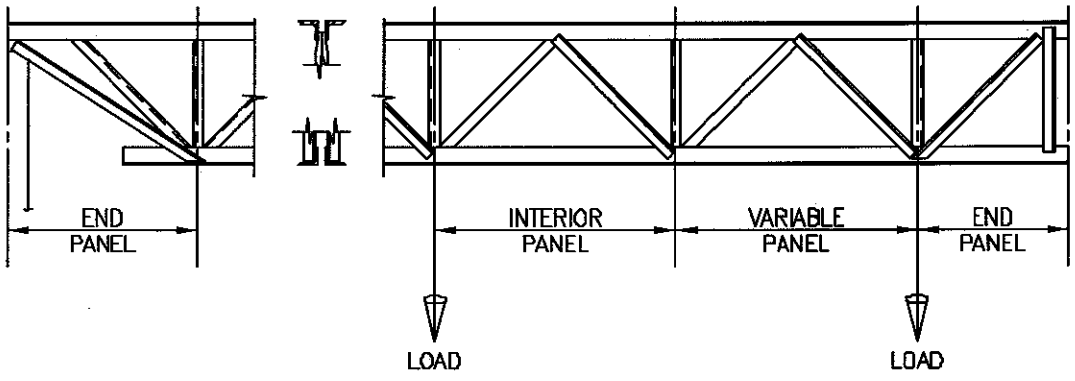

NOTES:
PICK POINTS SHALL BE LOCATED AT PANEL JOINTS AS SHOWN.
ATTACHMENT SHALL NOT CRIMP OR DAMAGE METAL PARTS.

LUNDY & FRANKE
ENGINEERING
140 HEIMER ROAD SUITE 360
SAN ANTONIO, TEXAS 78232
PH. (210)979-7900 FX. (210)979-7800

Job Title	TITLE1	By	DRAWN
	TITLE2	Ck.	CHECKED
	TITLE3	Date	DATE
Subject	SUBJECT1	File	FILE
	SUBJECT2	Job	JOB
	SUBJECT3	Sht.	SHT# of #SHTS

STATE OF TEXAS
CHARLES H. LUNDY
36983
LICENSED
PROFESSIONAL ENGINEER

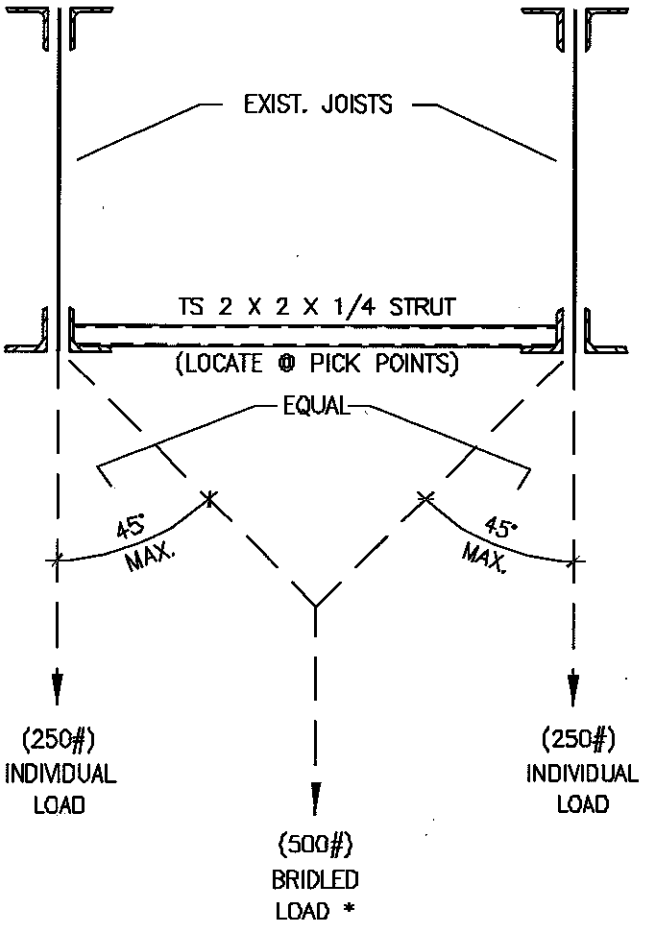

SECTION

SCALE: 3/4" = 1'-0"

* NOT TO BE COMBINED W/ INDIVIDUAL LOADS. DO NOT ATTACH TO THE STRUT.

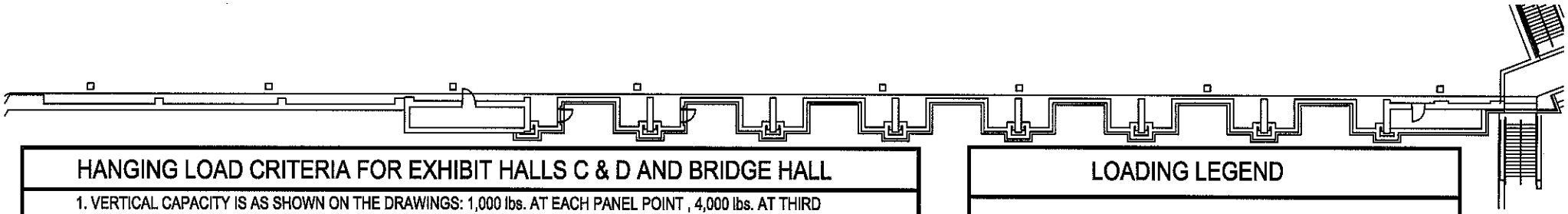

HANGING LOAD CRITERIA FOR EXHIBIT HALLS C & D AND BRIDGE HALL

1. VERTICAL CAPACITY IS AS SHOWN ON THE DRAWINGS: 1,000 lbs. AT EACH PANEL POINT , 4,000 lbs. AT THIRD POINTS , NO COMBINATION TO EXCEED 8,000 lbs. FOR 75 AND 90 FOOT TRUSSES OR 12,000 FOR 110 FOOT TRUSSES (IN THE BRIDGE HALL). LOADS MAY BE HUNG FROM TOP OR BOTTOM CHORD AND WITHIN ONE FOOT EITHER SIDE OF PANEL POINTS.
2. TOP CHORD BRIDAL LOAD CAPACITY: 1,000 lbs AT PANEL POINTS, 4,000 lbs. AT THIRD POINTS AT ANY ANGLE. (8,000 lbs. TOTAL FOR 75 AND 90 FOOT TRUSSES, 12,000 FOR 110 FOOT TRUSSES). TOTAL LOAD AT ANY JOINT SHALL NOT EXCEED THE MAXIMUM VERTICAL LOAD CAPACITY.
3. BOTTOM CHORD LOAD CAPACITY FOR LOADS APPLIED AT ANY ANGLE OTHER THAN VERTICAL: 160 lbs AT EACH PANEL POINT, 640 lbs AT THIRD POINTS. NO COMBINATION TO EXCEED 1,280 lbs. FOR 75 AND 90 FOOT TRUSSES OR 1,920 lbs. FOR 110 FOOT TRUSSES.
   EXAMPLE: 640 lb. LOAD APPLIED AT 45 DEG TO BOTTOM CHORD THIRD POINT
   + 1,360 lb. VERTICAL LOAD APPLIED TO SAME POINT
   + 2,000 lb. BRIDAL LOAD APPLIED TO TOP CHORD ABOVE SAME POINT
   = 4,000 lb.
4. PERIMETER WIDE FLANGE MEMBERS: 2,000 lbs. AT ANY ANGLE AT EACH JOIST OR AT 10'-0" ON CENTER WHERE NO JOIST OCCUR.
5. PERIMETER WIDE FLANGE MEMBERS AT EAST OF HALL 'D' WITHOUT PICK POINTS ARE NOT DESIGNED FOR ADDITIONAL HANGING LOADS.
6. SECONDARY MEMBERS AT PARTITION WALL: LOADS MENTIONED IN (1), (2) AND (3) ABOVE MAY BE APPLIED TO THESE MEMBERS, AT NO MORE THAN 2'-0" FROM THE TRUSS CENTERLINE.
7. MISCELLANEOUS VERTICAL LOADS OF 200 lbs. MAY BE PLACED ANYWHERE ALONG THE TRUSSES AS LONG AS THIS LOAD, IN COMBINATION WITH OTHER LOADS, DOES NOT EXCEED THE TOTAL LOAD CAPACITIES LISTED IN (1) OR (4).

LOADING LEGEND

1. ⊗4,000 lbs. MAX TOTAL LOAD AS FOLLOWS:
   4,000 lbs. MAX TOP CHORD, ANY DIRECTION
   4,000 lbs. MAX BOTTOM CHORD, VERTICAL
   640 lbs. MAX BOTTOM CHORD, ANY OTHER ANGLE
   (640, B.C. 45 DEG + 1360 B.C., VERT + 2000 TC = 4000)

2. ✖1,000 lbs. MAX TOTAL LOAD AS FOLLOWS:
   1,000 lbs. MAX TOP CHORD, ANY DIRECTION
   1,000 lbs. MAX BOTTOM CHORD, VERTICAL
   160 lbs. MAX BOTTOM CHORD, ANY OTHER ANGLE

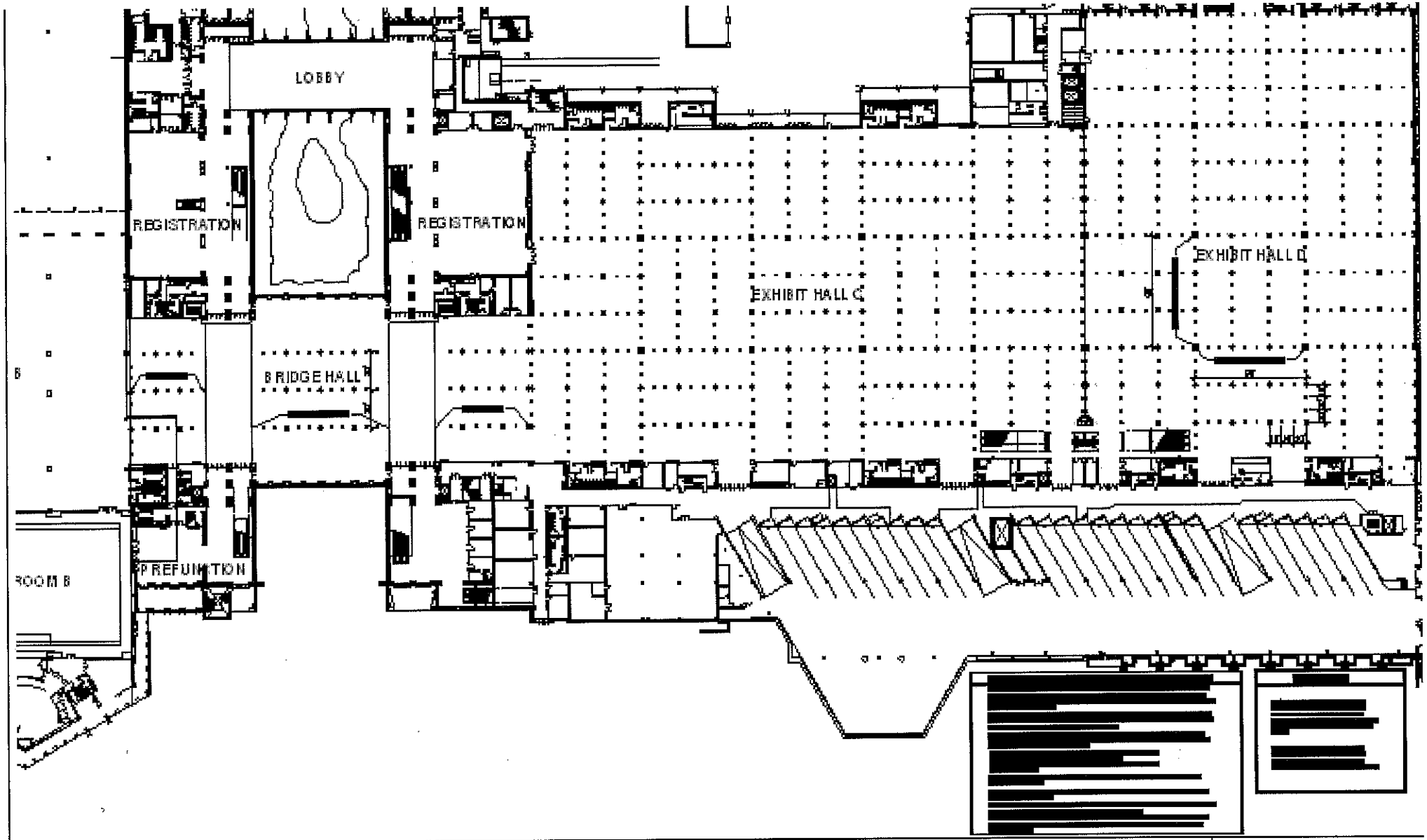

Hanger Points Location Plan - Street Level

Henry B. Gonzalez Convention Center Expansion