City of San Antonio

TRANSPORTATION AND CAPITAL IMPROVEMENTS

ADDENDUM No. 2

FORMAL REQUEST FOR COMPETITIVE SEALED PROPOSAL (RFCSP)

PROJECT NAME: DISTRICT 9 NEW BRANCH LIBRARY REMODEL/ADDITION – ID NO.:40-00409

DATE: June 10, 2014

This addendum is separated into sections for convenience; however, all contractors, subcontractors, material men, and other parties shall be responsible for reading the entire addendum. The failure to list an item or items in all affected sections of this addendum does not relieve any party affected from performing as per instructions, providing that the information is set forth one time any place in this addendum. These documents shall be attached to and become part of the Contract Documents for this project. The contractor shall be required to sign an acknowledgement of the receipt of this addendum and submit with their proposal package.

GENERAL:

1. The following changes and/or additions to the Contract Documents, via this addendum, shall apply to proposals made for and to the execution of the various parts of the work affected thereby.

2. Careful note of the Addendum shall be taken by all interested parties and all trades affected shall be fully advised in their performance of the work involved.

3. Conform to the attached Environmental Permits, Issues and Commitments (EPIC).

4. Proposals for this project are due no later than 2:00 p.m. CST on Tuesday, June 17, 2014 (solicitation deadline). The original proposal along with all the required documents and copies of the proposals must be submitted by the solicitation deadline. Submission must include one (1) unbound original proposal signed in ink, four (4) printed copies, for a total of five (5), and one (1) PDF version of the entire submittal on CD. One (1) 020 Bid Form in the original proposal will be accepted. A copy of the 020 Bid Form in the copies of the proposals and in the PDF version of the submittal on CD is not required. Submittals received after the deadline will not be accepted and will be returned to Respondent.

5. Utilization forms must be submitted at the time proposals are due, as required by the City's Small Business Economic Development Advocacy (SBEDA) Ordinance. Furthermore, the Utilization Plan must demonstrate a Respondent's plan to meet the assigned subcontracting requirements. Prospective Respondents may submit a full or partial waiver of the mandatory subcontracting requirements for good cause by submitting the appropriate waiver form and documentation, along with the Utilization Plan, at the time proposals are due. In the absence of a waiver granted by the Economic Development Department's Small Business Office, failure of a Respondent to satisfy the assigned subcontracting goals shall render its response non-Responsive.

TO THE TECHNICAL SPECIFICATIONS:

Section 07 52 13 – Modified Bitumen Membrane Roofing

1. Delete this Section.

Section 07 54 00 – Thermoplastic Membrane Roofing

1. Add this Section. Refer to ATTACHMENT - B

Section 09 68 13 – TILE CARPETING

1. Add the following section:

   2.1 MANUFACTURERS

   A. Shaw Contract; Representative: Lisa McNary; Telephone: 505-220-1312
   B. Mannington Commercial; Representative: Debbie Townsend; Telephone: 210-323-7017

   C. Substitutions will be considered in accordance with provisions of Division 1.

Section 10 22 20 – Demountable Partitions

1. Part 2 Products, 2.1 Manufacturers, add KI Genius Wall as an acceptable manufacturer.

Division 27 - Communications

1. Communications must comply with City of San Antonio Structured Cabling Infrastructure Guidelines attached.

Division 28 Electronic Safety and Security

1. Electronic Safety and Security Systems must comply with City of San Antonio Physical Security System Infrastructure Guidelines attached.

TO THE DRAWINGS:

Cover Sheet

1. Revise Index to Drawings T1.1 – Topographic Boundary and Improvements Survey to read as follows:

   T1.1 – EXISTING CONDITION SITE PLAN

Sheet T1.1 – Existing Condition Site Plan

1. Add this sheet.

Sheet D1.1 – Demolition Floor Plan

1. Revise Demolition Keyed Notes D.25, D.26 AND D.28 to read as follows:

   D.25 DRIVE THRU ORDER SYSTEM TO REMAIN
   D.26 STEEL PIPE BOLLARD TO REMAIN
   D.28 STEEL PIPE BOLLARD TO REMAIN

Sheet DP1.1 – Demolition Plumbing Waste and Vent Floor Plan

1. Add Demolition Keyed Notes No.3 to read as follows:

   3. Remove Grease trap in its entirety, adjust sewer system as required for a fully operational system. Patch and repair drive thru paving as required to match adjacent paving.

1. Delete General Site Note GS.4, there should not be any need to remove any Landscape.

Sheet A1.1 – Floor Plan

1. Add two new hollow metal doors, frames and hardware, refer to ATTACHMENT-C.

Sheet A1.3 – Finish Plan

1. Keyed Note K.4 Transition strip, shall be provided at all changes in flooring material, carpet to concrete, carpet to VCT and concrete to existing ceramic tile.

Sheet A1.4 – Alternate No.1 and No.2 Finish Plan

1. Add Alternate No.1 finishes to be as follows:

   Study 119- Flooring to be F-1, walls to be painted in P-1 and base to be B-1.

2. Add Alternate No. 2 finishes to be as follows:

   Study 119- Flooring to be F-1, walls to be painted in P-1 and base to be B-1.
   Maker Space 120- Flooring to be F-5, walls to be painted in P-1 and base to be B-1.

Sheet A2.4 – Wall Sections

1. Replace material note 07 52 00.01 with 07 54 00 .01 Thermoplastic Membrane Roofing.

Sheet A2.5 – Wall Sections

1. Replace material note 07 52 00.01 with 07 54 00 .01 Thermoplastic Membrane Roofing.

Sheet A5.1 – Interior Elevations

1. Revise Interior Elevation 5.A5.1 STACKS 101, refer to ATTACHMENT –A.

Sheet S2.1 – Foundation Plan

1. Remove Floor Elevations 99'-6" F.V., existing concrete slab is level at these areas.

Sheet P1.2 – Plumbing Domestic Water Floor Plan.

1. Replace with revised sheet attached.

Sheet P2.1 – Plumbing Schedules and Details.

1. Replace with revised sheet attached.

Sheet M1.1-1 – Mechanical Floor Plan.

2. Added equipment and ductwork to IT Room. Refer to ATTACHMENT – SM1.1-1.

Sheet M2.1-1 – Mechanical Schedules

1. Replace Ductless Split System Schedule. Refer to ATTACHMENT – SM2.1-1.

Sheet E1.1 – Electrical Lighting Floor Plan

1. Replace with revised sheet attached.

Sheet E1.2 – Electrical Power Floor Plan

1. Replace with revised sheet attached.

Sheet E2.1 – Electrical One Line Riser Diagrams + Light Fixture Schedule

1. Revise Light Fixture Schedule. Refer to ATTACHMENT – SE2.1-2.
2. Revise Equipment Connection Schedule. Refer to ATTACHMENT – SE2.1-1.

Sheet E3.1 – Electrical Panelboard Schedules

1. Added to Schedule for Panel 'PB'. Refer to ATTACHMENT-SE3.1-1
2. Added to Schedule for Panel 'PD'. Refer to ATTACHMENT-SE3.1-2

Sheet E4.1 – Electrical Details

1. Revised Detail 2 Typical Comm. Outlet. Refer to ATTACHMENT-SE4.1-1

Sheet T000 – Telecom Legend, Notes and Index

1. Replace this sheet with Revised Sheet T000 Telecom Legend, Notes and Index.

Sheet T100 – Technology Floor Plan

1. Replace this sheet with Revised Sheet T100 Technology Floor Plan.

Sheet T400 – MDF Enlarged Plan and Details

1. Replace this sheet with Revised Sheet T400 MDF Enlarged Plan and Details.

Sheet T501 – Telecom Details

1. Replace this sheet with Revised Sheet T501 Telecom Details.

END OF ADDENDUM No. 2

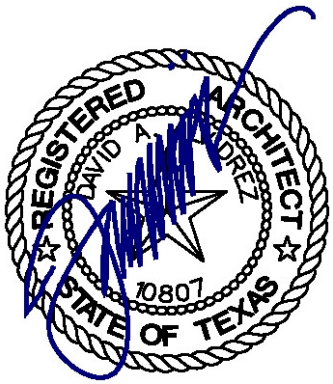

City of San Antonio

TRANSPORTATION AND CAPITAL IMPROVEMENTS

RECEIPT OF ADDENDUM NUMBER(S) **2** IS HEREBY ACKNOWLEDGED FOR THE PROJECT: **DISTRICT 9 NEW BRANCH LIBRARY REMODEL/ADDITION – ID NO.:40-00409**

FOR WHICH PROPOSAL WILL BE OPENED AND READ ALOUD ON: **June 17, 2014**

*****THIS ACKNOWLEDGEMENT MUST BE SIGNED AND RETURNED WITH THE PROPOSAL PACKAGE.*****

Company Name: _____

Address: _____

City/State/Zip Code: _____

Date: _____

_____

Signature

_____

Print Name/Title

DISCLAIMER:
The use of this standard is governed by the "Texas Engineering Practice Act". No warranty of any kind is made by TxDOT for any purpose whatsoever. TxDOT assumes no responsibility for the conversion of this standard to other formats or for incorrect results or damages resulting from its use.

I. STORMWATER POLLUTION PREVENTION-CLEAN WATER ACT SECTION 402

Texas Pollutant Discharge Elimination System (TPDES) TXR 150000: Stormwater Discharge Permit or Construction General Permit (CGP) required for projects with 1 or more acres distrubed soil. Projects with any disturbed soil must protect for erosion and sedimentation in accordance with Item 1122.

☒ No Action Required ☐ Required Action

Action No.

1. Prevent stormwater pollution by controlling erosion and sedimentation in accordance with TPDES Permit TXR 150000.
2. Comply with the Storm Water Pollution Prevention Plan (SW3P) and revise when necessary to control pollution or required by the Engineer.
3. Post Construction Site Notice (CSN) with SW3P information on or near the site, accessible to the public and Texas Commission on Environmental Quality (TCEQ), Environmental Protection Agency (EPA) or other inspectors.
4. When Contractor project specific locations (PSL's) increase disturbed soil area to 5 acres or more, Contractor shall submit Notice of Intent (NOI) to TCEQ and the Engineer.
5. NOI required: ☐ Yes ☒ No

Note: If amount of soil disturbance changes, permit requirements may change.

II. WORK IN OR NEAR STREAMS, WATERBODIES AND WETLANDS CLEAN WATER ACT SECTIONS 401 AND 404

US Army Corps of Engineers (USACE) Permit required for filling, dredging, excavating or other work in any potential USACE jurisdictional water, such as, rivers, creeks, streams, or wetlands.

The Contractor shall adhere to all of the terms and conditions associated with the following permit(s):

☒ No Permit Required

☐ Nationwide Permit (NWP) 14 - Pre-construction Notice (PCN) not Required

☐ Nationwide Permit 14 - PCN Required

☐ Individual 404 Permit Required

☐ Other Nationwide Permit Required: NWP# _____

Required Actions: List waters of the US permit applies to, location in project and check Best Management Practices (BMPs) planned to control erosion, sedimentation and post-project total suspended solids (TSS).

1.

2.

3.

4.

401 Best Management Practices: (Not applicable if no USACE permit)

Erosion	Sedimentation	Post-Construction TSS
☐ Temporary Vegetation	☐ Silt Fence	☐ Vegetative Filter Strips
☐ Blankets/Matting	☐ Rock Berm	☐ Retention/Irrigation Systems
☐ Mulch	☐ Triangular Filter Dike	☐ Extended Detention Basin
☐ Sodding	☐ Sand Bag Berm	☐ Constructed Wetlands
☐ Interceptor Swale	☐ Straw Bale Dike	☐ Wet Basin
☐ Diversion Dike	☐ Brush Berms	☐ Erosion Control Compost
☐ Erosion Control Compost	☐ Erosion Control Compost	☐ Mulch Filter Berm and Socks
☐ Mulch Filter Berm and Socks	☐ Mulch Filter Berm and Socks	☐ Compost Filter Berm and Socks
☐ Compost Filter Berm and Socks	☐ Compost Filter Berm and Socks	☐ Vegetation Lined Ditches
	☐ Stone Outlet Sediment Traps	☐ Sand Filter Systems
	☐ Sediment Basins	☐ Sedimentation Chambers

III. CULTURAL RESOURCES

Cultural resources fall under the Antiquities Code of Texas and/or the National Historic Preservation Act, as amended in 1966. If a previously unidentified archeological site is encountered during construction work, activities should be immediately stopped in the vicinity and the City Archeologist (210-207-7306) notified and/or the SHPO.

☐ No Action Required ☒ Required Action

Action No.

1. Due to the presence of a known archeological site underneath the existing building, impacts deeper than 12 to 18 inches may require additional archeological investigations.
2.
3.
4.

IV. VEGETATION RESOURCES

Preserve native vegetation to the extent practical.

☐ No Action Required ☒ Required Action

Action No.

1. 1. Ensure that a tree permit is in place for this project, if required.
2. 2. Follow the tree preservation/mitigation plan provided in the design plan set. If there are any questions or concerns, please contact the City Arborist at 207-0278, before any work begins.
3.
4.

V. FEDERAL LISTED, PROPOSED THREATENED, ENDANGERED SPECIES, CRITICAL HABITAT, STATE LISTED SPECIES, CANDIDATE SPECIES AND MIGRATORY BIRDS.

☐ No Action Required ☒ Required Action

Action No.

1. MIGRATORY BIRD NESTS: Schedule construction activities as needed to meet the following requirements:

   A. Do not remove or destroy any active migratory bird nests (nests containing eggs and/or flightless birds) at any time of year. If there are any active nests, they shall not be removed until the nests become inactive.

   B. On/in structures, if there are any active nests, they shall not be removed until all nests become inactive. After inactive nests are removed and/or before nest activity begins, deterrent materials may be applied to the structures to prevent future nest building.

2. See Item 5 in General Notes.
3.
4.

If any of the listed species are observed, cease work in the immediate area, do not disturb species or habitat and contact the Engineer immediately. The work may not remove active nests from bridges and other structures during nesting season of the birds associated with the nests. If caves or sinkho are discovered, cease work in the immediated area, and contact the Engineer immediately.

VI. HAZARDOUS MATERIALS OR CONTAMINATION ISSUES

General (applies to all projects):

Comply with the Hazard Communication Act (the Act) for personnel who will be working with hazardous materials by conducting safety meetings prior to beginning construction and making workers aware of potential hazards in the workplace. Ensure that all workers are provided with personal protective equipment appropiate for any hazardous materials used.

Obtain and keep on-site Material Safety Data Sheets (MSDS) for all hazardous products used on the project, which may include, but are not limited to the following categories: Paints, acids, solvents, asphalt products, chemical additives, fuels and concrete curing compounds or additives. Provide protected storage, off bare ground and covered, for products which may be hazardous. Maintain product labelling as required by the Act.

Maintain an adequate supply of on-site spill response materials, as indicated in the MSDS. In the event of a spill, take actions to mitigate the spill as indicated in the MSDS, in accordance with safe work practices, and contact the COSA Inspector immediately. The Contractor shall be responsible for the proper containment and cleanup of all product spills.

Inspector

Contact the ~~Engineer~~ if any of the follwing are detected:

* Dead or distressed vegetation (not identified as normal)
* Trash piles, drums, canister, barrels, etc.
* Undesirable smells or odors
* Evidence of leaching or seepage of substances

Hazardous Materials or Contamination Issues Specific to this Project:

☒ No Action Required ☐ Required Action

Action No.

1.

2.

3.

Does the project involve the demolition of a span bridge?

☐ Yes ☒ No (No further action required)

If "Yes", a pre-demolition notification must be submitted to the Texas Department of State Health Services, 20 calendar days prior to the demolition of the bridges(s) on the project. Contact TxDOT's hazardous material Coordinator at 210-615-6486 for assisstance with the notification.

VII. OTHER ENVIRONMENTAL ISSUES

(includes regional issues such as Edwards Aquifer District, etc.)

☐ No Action Required ☒ Required Action

Action No.

1. Project site is located within the Recharge Zone of the Edwards Aquifer.
2. Follow Edwards Aquifer Protection Plan (EAPP) and the Water Pollution Abatement Plan (WPAP) requirements, including any other conditions listed in the TECQ Authorization Letter.
3. Remediate any spills and immediate report spills (including sanitary sewer discharge) of reportable quantities to the City Inspector and to the following agencies:
   Edwards Aquifer Authority - 210-222-2204
   State Emergency Response Center - 800-832-8224 (If after hours) or
   TCEQ Regional Office - 210-490-3096 (If during business hours)
   Report spills within 24 hours unless other regulations require more expedient notification.

The project is located within Karst Zone

1. If any sensitive feature (caves, subsurface voids, etc) is discovered during construction, all construction activities near the sensitive feature must be suspended immediately. The Engineer should be immediately notified of any sensitive features encountered during construction. The construction activities near the sensitive feature may not proceed until a US Fish and Wildlife Service (USFWS) permitted biologist has assessed the site for evidence of habitat or listed endangered species. If it is determined that endangered species or their habitat is present within the void space, consultations with the USFWS will commence and work within the immediate vicinity of the sensitive feature will not be allowed to proceed until all parties are in agreement regarding necessary permitting.

D9 New Branch Library
May 2014

ENVIRONMENTAL PERMITS, ISSUES AND COMMITMENTS

EPIC

FILE: epic August 2012.dgn	DN: TxDOT	CK: TxDOT	DW: BW	CK: JAB
© TxDOT August 2012	CONT	SECT	JOB	HIGHWAY
REVISIONS				
	DIST	COUNTY		SHEET NO.

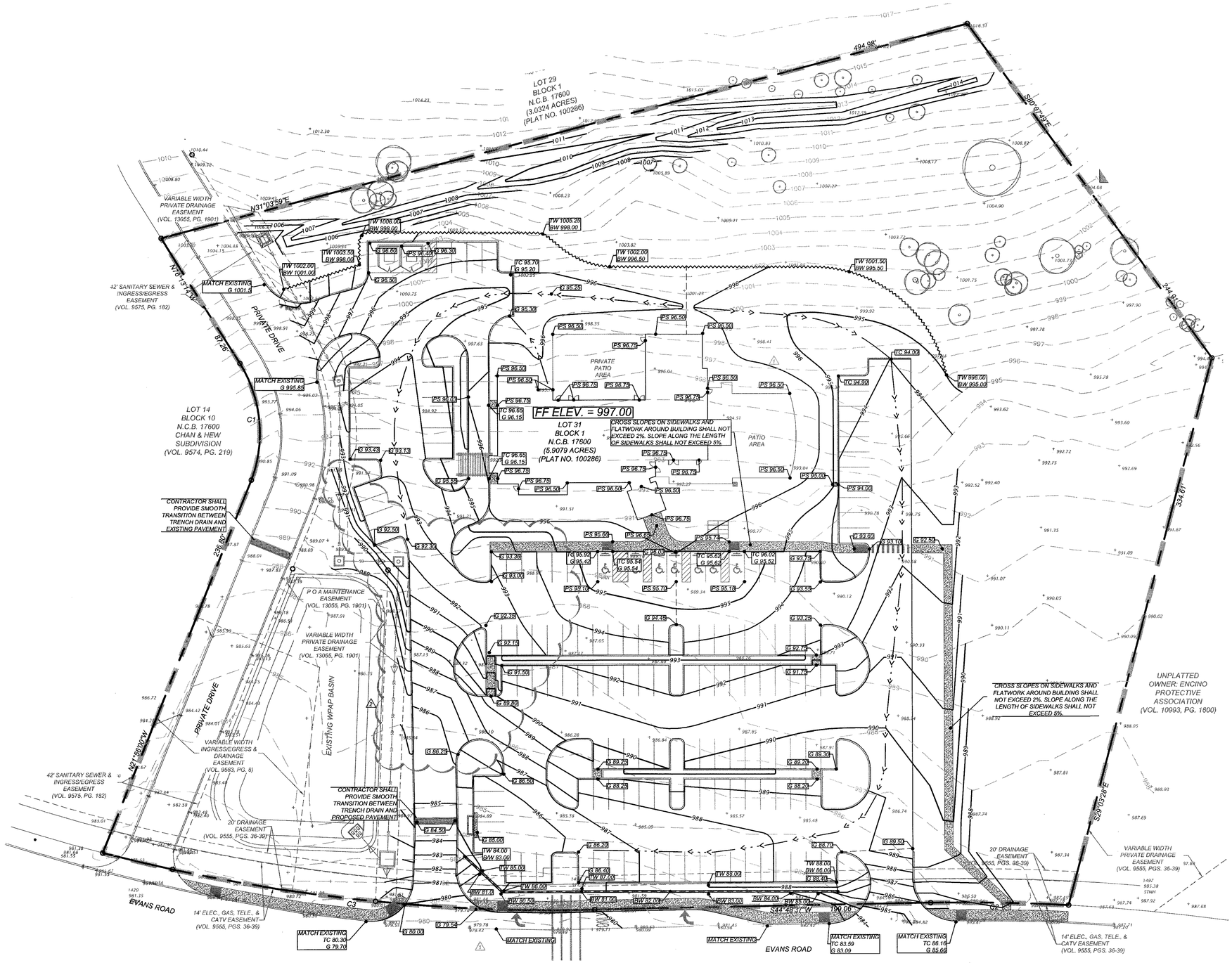

EXISTING CONDITION SITE PLAN

N.T.S.

NOTE: THIS PLAN IS INCLUDED FOR INFORMATION ONLY. THE ARCHITECT DOES NOT ENSURE THE ACCURACY OF THIS INFORMATION. THE CONTRACTOR SHALL REPORT ANY DISCREPANCIES PRIOR TO PROCEEDING WITH THE WORK.

CITY OF SAN ANTONIO

DISTRICT 9 LIBRARY
REMODEL / ADDITION

2515 E. EVANS ROAD
SAN ANTONIO, TEXAS 78258

GENERAL SITE NOTES

DRAWING COORDINATION

ARCHITECTURAL, CIVIL, STRUCTURAL, MECHANICAL, ELECTRICAL AND LANDSCAPE DRAWINGS ARE INTERRELATED. GENERAL CONTRACTOR AND ALL SUB-CONTRACTORS SHALL REVIEW AND COORDINATE THE ENTIRE SET OF DRAWINGS AND PROJECT MANUAL.

EXSITING CONDITION SITE PLAN
13.24.000

T1.1
1 OF 1

JUNE 2014

ADDENDUM NO.2

ALVIDREZ
Architecture Inc.

MEMBER AMERICAN INSTITUTE OF ARCHITECTS
110 BROADWAY • SAN ANTONIO, TEXAS • 78205 • T: 210.299.8100 • F: 210.299.8102

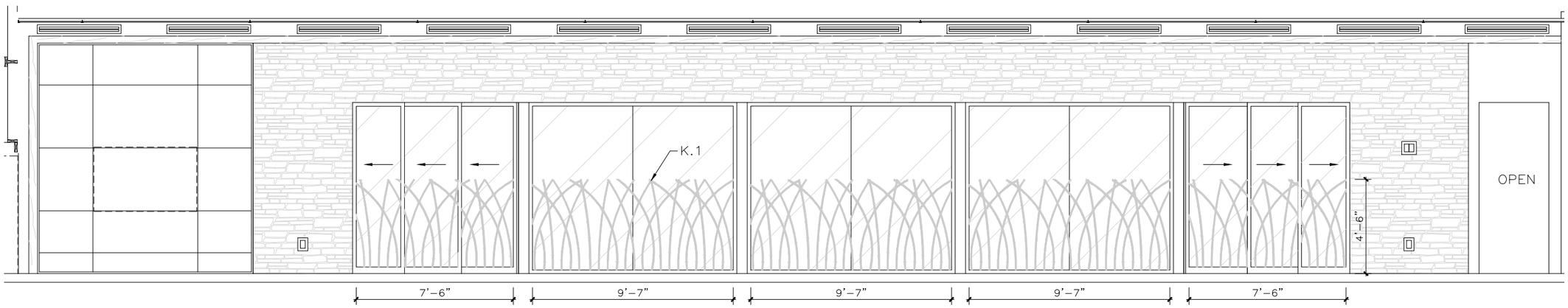

5.A5.1 STACKS 101

SCALE: 3/16" = 1'-0"

GENERAL NOTE:

1. OBTAIN GRAPHIC FROM ARCHITECT.
2. DECORATIVE FILM TO BE 3M FASARA, REFERENCE MISCELLANEOUS ITEMS SCHEDULE ON A1.3 TYPE/COLOR.

KEYED NOTE:

K.1 DECORATIVE FILM

CITY OF SAN ANTONIO
D9 LIBRARY REMODEL/ADDITION

2515 E. EVANS ROAD,SAN ANTONIO, TEXAS 78258

07 54 000 - THEMOPLASTIC MEMBRANE ROOFING

PART 1 - GENERAL

1.1 SYSTEM DESCRIPTION

A. Install TPO Mechanically Attached Roofing System as outlined below:

Apply the TPO Mechanically Attached Roofing System in conjunction with rigid insulation over metal roof deck.

1.2 EXTENT OF WORK

A. Provide all labor, material, tools, equipment, and supervision necessary to complete the installation of the VersiWeld 60-mill thick white, reinforced TPO (Thermoplastic Polyolefin) membrane Mechanically-Fastened Roofing System including flashings and insulation as specified herein and as indicated on the drawings in accordance with the manufacturer's most current specifications and details.

B. The roofing contractor shall be fully knowledgeable of all requirements of the contract documents and shall make themselves aware of all job site conditions that will affect their work.

C. The roofing contractor shall confirm all given information and advise the building owner, prior to bid, of any conflicts that will affect their cost proposal.

1.3 RELATED SECTIONS

A. Section 06 10 10 – Structural Rough Carpentry

B. Section 07 71 00 – Roof Specialties

C. Section 07 72 00 Roof Accessories

1.4 SUBMITTALS

A. Submit under provisions of Section 01 33 00.

B. Prior to starting work, the roofing contractor must submit the following:

1. Shop drawings showing layout, details of construction and identification of materials.

2. Sample of the manufacturer's Membrane System Warranty.

3. Submit a letter of certification from the manufacturer which certifies the roofing contractor is authorized to install the manufacturer's roofing system and lists foremen who have received training from the manufacturer along with the dates training was received.

4. Certification from the membrane manufacturer indicating the fasteners are capable of providing a static backout resistance of 10 inch pounds minimum is required.

5. Certification from the membrane manufacturer indicating the membrane thickness over the reinforcing scrim (top ply membrane thickness) is nominal .15-mil or thicker.

6. Certification of the manufacturer's warranty reserve.

C. Upon completion of the installed work, submit copies of the manufacturer's final inspection to the specifier prior to the issuance of the manufacturer's warranty.

1.5 QUALIFICATIONS

A. Manufacturer: Company specializing in manufacturing the products specified in this Section with ten (10) years documented experience.

B. Applicator: Company specializing in performing the work of this Section with five (5) years documented experience and approved by system manufacturer.

1.6 PRODUCT DELIVERY, STORAGE AND HANDLING

A. Deliver materials to the job site in the manufacturer's original, unopened containers or wrappings with the manufacturer's name, brand name and installation instructions intact and legible. Deliver in sufficient quantity to permit work to continue without interruption.

B. Comply with the manufacturer's written instructions for proper material storage.

1. Store membrane in the original undisturbed plastic wrap in a cool, shaded area and cover with light-colored, breathable, waterproof tarpaulins. Membrane that has been exposed to the elements for approximately 7 days must be prepared with Versico Weathered Membrane Cleaner prior to hot air welding.

2. Store curable materials (adhesives and sealants) between 60°F and 80°F in dry areas protected from water and direct sunlight. If exposed to lower temperature, restore to 60°F minimum temperature before using.

3. Store materials containing solvents in dry, well ventilated spaces with proper fire and safety precautions. Keep lids on tight. Use before expiration of their shelf life.

C. Insulation must be on pallets, off the ground and tightly covered with waterproof materials.

D. Any materials which are found to be damaged shall be removed and replaced at the applicator's expense.

1.7 WORK SEQUENCE

A. Schedule and execute work to prevent leaks and excessive traffic on completed roof sections. Care should be exercised to provide protection for the interior of the building and to ensure water does not flow beneath any completed sections of the membrane system.

1.8 USE OF THE PREMISES

A. Before beginning work, the roofing contractor must secure approval from the building owner's representative for the following:

1. Areas permitted for personnel parking.

2. Access to the site.

3. Areas permitted for storage of materials and debris.

4. Areas permitted for the location of cranes, hoists and chutes for loading and unloading materials to and from the roof.

1.9 EXISTING CONDITIONS

If discrepancies are discovered between the existing conditions and those noted on the drawings, immediately notify the owner's representative and solicit the manufacturer's approval prior to commencing with the work. Necessary steps shall be taken to make the building watertight until the discrepancies are resolved.

1.10 PRE-CONSTRUCTION CONFERENCE

A. Convene one week prior to commencing work of this section, under provisions of Section 01 31 00.

B. **Prior to conference, all substrates, field fabricated curbs, blocking etc. shall be completed and ready to receive roofing work.**

C. Review preparation and installation procedures and coordinating and scheduling required with related work. Specific topics discussed shall include:
1. Counterflashing height
2. Extent of base flashing
3. Method for constructing crickets and slopes at drains
4. Part 3 of this section
5. Flashing samples

D. General Contractor shall verify that all roof penetrations are identified and roof deck is fully supported.

E. Conference shall be attended by the Superintendent, roofing installer, foreman for each trade requiring room penetrations including but not limited to HVAC, plumbing, electrical, special system and architect, mechanical and electrical engineer and owner's representative if any.

1.11 TEMPORARY FACILITIES AND CONTROLS

A. Temporary Utilities:

1. Water, power for construction purposes and lighting are available at the site and will be made available to the roofing contractor.

2. Provide all hoses, valves and connections for water from source designated by the owner when made available.

3. When available, electrical power should be extended as required from the source. Provide all trailers, connections and fused disconnects.

B. Temporary Sanitary Facilities

Sanitary facilities will not be available at the job site. The roofing contractor shall be responsible for the provision and maintenance of portable toilets or their equal.

C. Building Site:

1. The roofing contractor shall use care and shall be responsibility to protect the building and site against damages. The contractor shall be responsible for the correction of any damage incurred as a result of the performance of the contract.

2. The roofing contractor shall remove all debris from the job site in a timely and legally acceptable manner so as to not detract from the aesthetics or the functions of the building.

D. Security:

Obey the owner's requirements for personnel identification, inspection and other security measures.

1.12 JOB SITE PROTECTION

A. The roofing contractor shall adequately protect building, paved areas, service drives, lawn, shrubs, trees, etc. from damage while performing the required work. Provide canvas, boards and sheet metal (properly secured) as necessary for protection and remove protection material at completion. The contractor shall repair or be responsible for costs to repair all property damaged during the roofing application.

B. During the roofing contractor's performance of the work, the building owner will continue to occupy the existing building. The contractor shall take precautions to prevent the spread of dust and debris, particularly where such material may sift into the building. The roofing contractor shall provide labor and materials to construct, maintain and remove necessary temporary enclosures to prevent dust or debris in the construction area(s) from entering the remainder of the building.

C. Do not overload any portion of the building, either by use of or placement of equipment, storage of debris, or storage of materials.

D. Protect against fire and flame spread. Maintain proper and adequate fire extinguishers.

E. Take precautions to prevent drains from clogging during the roofing application. Remove debris at the completion of each day's work and clean drains, if required. At completion, test drains to ensure the system is free running and drains are watertight. Remove strainers and plug drains in areas where work is in progress. Install flags or other telltales on plugs. Remove plugs each night and screen drain.

F. Store moisture susceptible materials above ground and protect with waterproof coverings.

G. Remove all traces of piled bulk materials and return the job site to its original condition upon completion of the work.

1.13 SAFETY

The roofing contractor shall be responsible for all means and methods as they relate to safety and shall comply with all applicable local, state and federal requirements that are safety related. Safety shall be the responsibility of the roofing contractor. All related personnel shall be instructed daily to be mindful of the full time requirement to maintain a safe environment for the facility's occupants including staff, visitors, customers and the occurrence of the general public on or near the site.

1.14 WORKMANSHIP

A. Applicators installing new roof, flashing and related work shall be factory trained and approved by the manufacturer they are representing.

B. All work shall be of highest quality and in strict accordance with the manufacturer's published specifications and to the building owner's satisfaction.

C. There shall be a supervisor on the job site at all times while work is in progress.

1.15 QUALITY ASSURANCE

A. The Roofing System must achieve a UL Class A.

B. The membrane must be manufactured by the material supplier. Manufacturer's supplying membrane made by others are not acceptable.

C. Unless otherwise noted in this specification, the roofing contractor must strictly comply with the manufacturer's current specifications and details.

D. The roofing system must be installed by an applicator authorized and trained by the manufacturer in compliance with shop drawings as approved by the manufacturer. The roofing applicator shall be thoroughly experienced and upon request be able to provide evidence of having at least five (5) years successful experience installing single-ply TPO roofing systems and having installed at leastone (1) roofing application or several similar systems of equal or greater size within one year.

E. Provide adequate number of experienced workmen regularly engaged in this type of work who are skilled in the application techniques of the materials specified. Provide at least one thoroughly trained and experienced superintendent on the job at all times roofing work is in progress.

F. There shall be no deviations made from this specification or the approved shop drawings without the prior written approval of the specifier. Any deviation from the manufacturer's installation procedures must be supported by a written certification on the manufacturer's letterhead and presented for the specifier's consideration.

G. The TPO White membrane must meets CRRC (Cool Roof Rating Council) for reflectance and emittance. When tested in accordance with ASTM C1549, the TPO White material must have an initial solar reflectance of 0.79 and a 3-year aged reflectance of 0.70. The material shall test for emittance in accordance with ASTM C1371; an initial emittance of .90 and a 3-year aged emittance of 0.86 were achieved.

H. Upon completion of the installation, the applicator shall arrange for an inspection to be made by a non-sales technical representative of the membrane manufacturer in order to determine whether or not corrective work will be required before the warranty will be issued. Notify the building owner seventy-two (72) hours prior to the manufacturer's final inspection.

1.16 JOB CONDITIONS, CAUTIONS AND WARNINGS

Refer to Versico's VersiWeld Roofing System specification for General Job Site Considerations.

A. Material Safety Data Sheets (MSDS) must be on location at all times during the transportation, storage and application of materials.

B. When positioning membrane sheets, exercise care to locate all field splices away from low spots and out of drain sumps. All field splices should be shingled to prevent bucking of water.

C. When loading materials onto the roof, the Versico Authorized Roofing Contractor must comply with the requirements of the building owner to prevent overloading and possible disturbance to the

building structure.

D. Proceed with roofing work only when weather conditions are in compliance with the manufacturer's recommended limitations, and when conditions will permit the work to proceed in accordance with the manufacturer's requirements and recommendations.

E. Proceed with work so new roofing materials are not subject to construction traffic. When necessary, new roof sections shall be protected and inspected upon completion for possible damage.

F. Provide protection, such as 3/4 inch thick plywood, for all roof areas exposed to traffic during construction. Plywood must be smooth and free of fasteners and splinters.

G. The surface on which the insulation or roofing membrane is to be applied shall be clean, smooth, dry, and free of projections or contaminants that would prevent proper application of or be incompatible with the new installation, such as fins, sharp edges, foreign materials, oil and grease.

H. New roofing shall be complete and weathertight at the end of the work day.

I. Contaminants such as grease, fats and oils shall not be allowed to come in direct contact with the roofing membrane.

1.17 WARRANTY

A. Special Project Warranty: Submit two executed copies of 2-year "Roofing Guarantee" commencing on the Date of Substantial Completion covering work of this section including roofing membrane, composition flashing, roof insulation, vapor barriers (if any), and roofing accessories, signed and countersigned by installer (Roofer) and Contractor. Applicator's guarantee shall cover the correction of all defects in workmanship and material maintaining the roof in repair on a call back basis at not cost to the Owner.

B. Manufacturer's Warranty **- 20 YEAR NO DOLLAR LIMIT**: Submit executed copy of roofing manufacturer's standard "Total System Warranty" agreement including flashing endorsement, signed by an authorized representative of roofing system manufacturer, on form which was published with product literature as of date of contract documents, for the following period of time:

20 years commencing on the Project Date of Final Acceptance.

C. The Project Date of Final Acceptance shall be determined by the Architect and Owner. The Contractor shall obtain and pay for additional warranty time as may be required.

D. Warranty will state that the manufacturer will repair or replace any leaking portion of the roof to maintain the watertight integrity of the roofing work including roof membrane, flashing and roof insulation for a period of twenty (20) years commencing on the Date of Final Acceptance. Guarantee shall have no penal sum and shall cover all materials and workmanship.

E. Guarantee period: 20 years commencing on the project dated of substantial completion.

PART 2 - PRODUCTS

2.1 GENERAL

A. All components of the specified roofing system shall be products of Versico or accepted by Versico as compatible.

B. All products (including insulation, fasteners, fastening plates, prefabricated accessories and edgings) must be manufactured and/or supplied by the roofing system manufacturer and covered by the warranty.

2.2 MEMBRANE

Furnish VersiWeld 60-mil thick white reinforced TPO (Thermoplastic Polyolefin) membrane as needed to complete the roofing system. Membrane thickness over the reinforcing scrim (top-ply thickness) shall be nominal .015-mil or thicker. Membrane sheets in rolls 12', 10' or 8' wide by 100' long.

2.3 INSULATION

A. Insulation: ASTM C728-82 expanded perlite mineral aggregate board; with the following characteristics:

Board Size	2' x 4' or 4' x 4'
Board Thickness	Tapered
Board Edges	Square

B. Insulation: Composite manufacturer of base layer of Fesco Board, core of polyisocyanurate foam and top surface of non asphaltic fiber glass mat with the following characteristics:

Board Size	4' x 8'
Board Thickness	3 inches
Thermal Resistance	R=20
Board Edges	Square

2.4 ADHESIVES AND CLEANERS

All products shall be furnished by Versico and specifically formulated for the intended purpose.

A. VersiWeld Bonding Adhesive: A high-strength, synthetic rubber adhesive used for bonding VersiWeld membrane to various surfaces. The adhesive is applied to both the membrane and the substrate at a coverage rate of approximately 60 square feet per gallon per finished surface (includes coverage on both surfaces).

2.5 FASTENERS AND PLATES

To be used for mechanical attachment of insulation and to provide additional membrane securement:

A. HPVX Fasteners: A heavy duty #15 threaded fastener with a #3 phillips drive used for membranre or insulation securement into steel, wood plank or minimum 15/32 inch thick plywood when increased pullout resistance is desired.

B. Insulation Fastening Plates: a nominal 3 inch diameter plastic or metal plate used for insulation attachment.

2.6 METAL EDGING AND MEMBRANE TERMINATIONS

A. General: All metal edging s shall be tested and meet ANSI/SPRI ES-1 standards and comply with International Building Code.

B. VersiTrim Coping: incorporates a 20 gauge anchor cleat with 4 pre-slotted holes, a concealed joint cover and 10 foot continuous sections of coping cap; can accommodate minimum 5 " wide parapet walls. Metal coping cap color shall be as designated by the Owner's Representative.

C. VersiTrim One Coping: A snap-on coping edge system consisting of a 24 gauge retainer bar (face side only), corrosion resistant fasteners and a 24 gauge or 0.040 aluminum Kynar finished coping cover. The coping cover is secured by clipping on the retainer bar and fastened on the backside with corrosion resistant fasteners (with rubber washer). Available for wall thicknesses up to 30". Metal coping cap color shall be as designated by the Owner's Representative.

D. Termination Bar: a 1" wide and .098" thick extruded aluminum bar pre-punched 6" on center; incorporates a sealant ledge to support Lap Sealant and provide increased stability for membrane terminations.

2.7 WALKWAYS

Protective surfacing for roof traffic shall be VersiWeld TPO Walkway Rolls installed per manufacturer's requirements or concrete pavers loose laid over an approved slip sheet (pavers not recommended for slopes greater than 2" in 12").

PART 3 - EXECUTION

3.1 GENERAL

A. Comply with the manufacturer's published instructions for the installation of the membrane roofing system including proper substrate preparation, jobsite considerations and weather restrictions.

B. Position sheets to accommodate contours of the roof deck and shingle splices to avoid bucking water.

3.2 INSULATION PLACEMENT AND ATTACHMENT

A. Install insulation or membrane underlayment over the substrate with boards butted tightly together with no joints or gaps greater than 1/4 inch. Stagger joints both horizontally and vertically if multiple layers are provided.

B. Secure insulation to the substrate with the required Versico fasteners and plates in accordance with manufacturers specifications.

3.3 MEMBRANE PLACEMENT AND ATTACHMENT

A. Unroll and position membrane. Provide and secure both perimeter and field membrane sheets in accordance with the manufacturer's most current specifications and details.

B. Secure the membrane with the required Versico Fasteners and Plates spaced a maximum of 12 inches on center depending or project conditions (centered over the pre-printed marks approximately 1-1/2 inches from the edge of the membrane sheet).

C. Install adjoining membrane sheets in the same manner in accordance with the manufacturer's specifications.

3.4 MEMBRANE HOT AIR WELDING PROCEDURES

A. Hot air weld the VersiWeld membrane using an Automatic Hot Air Welding Machine or Hot Air Hand Welder in accordance with the manufacturer's specifications. At all splice intersections, roll the seam with a silicone roller immediately after welder crossed the membrane step-off to ensure a continuous hot air welded seam.

B. All splice intersections shall be overlaid with VersiWeld non-reinforced flashing or TPO T-Joint covers.

C. Probe all seams once the hot air welds have thoroughly cooled (approximately 30 minutes).

D. Repair all seam deficiencies the same day they are discovered.

E. Apply Cut Edge Sealant on all cut edges of reinforced membrane (where the scrim reinforcement is exposed) after seam probing is complete. Cut edge sealant is not required on vertical splices.

3.5 FLASHING

A. Flashing of parapets, curbs, expansion joints and other parts of the roof must be performed using VersiWeld reinforced membrane. VersiWeld non-reinforced membrane can be used for flashing pipe penetrations, Sealant Pockets, scuppers, as well as inside and outside corners when the use of pre-fabricated accessories is not feasible.

B. Follow manufacturer's typical flashing procedures for all wall, curb, and penetration flashing including metal edging/coping and roof drain applications.

3.6 WALKWAYS

A. Install walkways at all traffic concentration points, roof hatches, access doors, rooftop ladders and all locations as identified on the specifier's drawing.

B. Hot air weld walkway material to the membrane in accordance with the manufacturer's specifications.

3.7 DAILY SEAL

A. On phased roofing, when the completion of flashings and terminations is not achieved by the end of the work day, a daily seal must be performed to temporarily close the membrane to prevent water infiltration.

B. Complete an acceptable membrane seal in accordance with the manufacturer's requirements.

3.8 CLEAN UP

A. Perform daily clean-up to collect all wrappings, empty containers, paper, and other debris from the project site. Upon completion, all debris must be disposed of in a legally acceptable manner.

B. Prior to the manufacturer's inspection for warranty, the applicator must perform a pre-inspection to review all work and to verify all flashing has been completed as well as the application of all caulking.

END OF SECTION 07 54 00

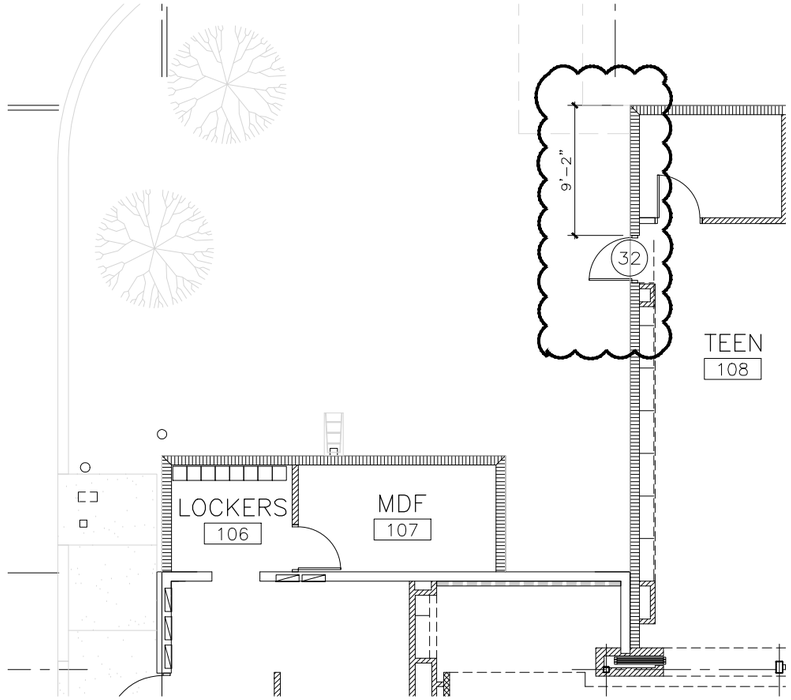

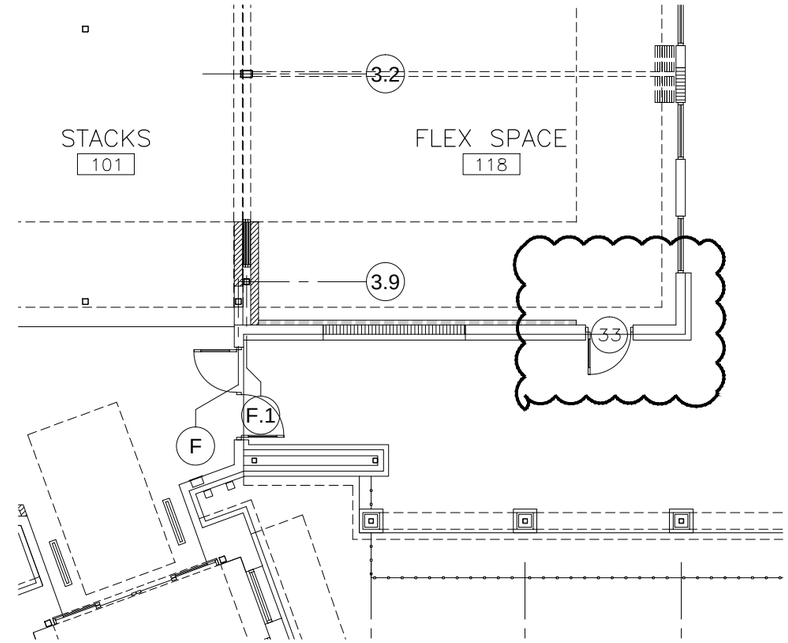

PARTIAL FLOOR PLANS

SCALE: 3/32" = 1'-0"

DOOR SCHEDULE

NO.	FROM	TO	TYPE	WIDTH	HEIGHT	THICK.	MAT.	GLASS	FRAME	LABEL	H.W.	DETAIL	NOTES
32	108	EXT.	C	3'-0"	8'-0"	1 3/4"	HM	–	HM	–	106	8.D8.1	1
33	108	EXT.	C	3'-0"	8'-0"	1 3/4"	HM	–	HM	–	106	8.D8.1	2

LEGEND

(01) DOOR NUMBER

(01)E EXISTING DOOR

NOTES

1. PROVIDE HAEDER TYPE B. REFER TO STRUCTURAL.
2. INSTALL NEW HM DOOR ON EXISTING DOOR OPENING. ADJUST DOOR AS REQUIRED TO FIT EXISTING OPENING.

DOOR TYPES

C

CITY OF SAN ANTONIO
D9 LIBRARY REMODEL/ADDITION

2515 E. EVANS ROAD,SAN ANTONIO, TEXAS 78258

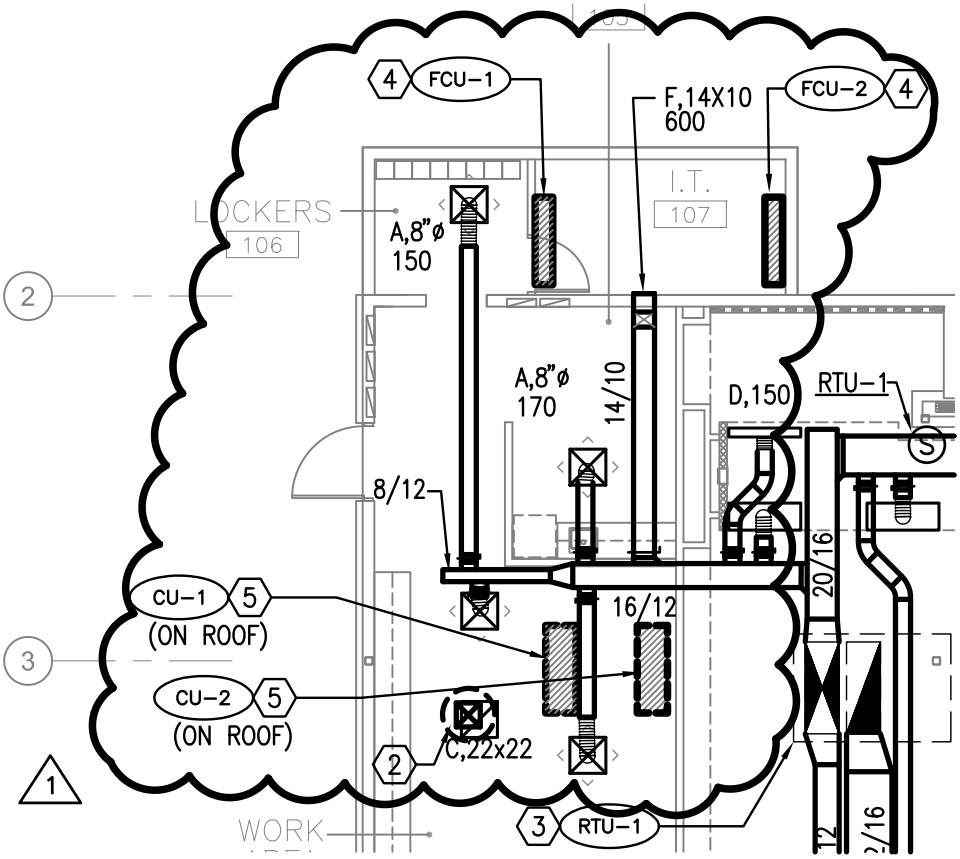

1 MECHANICAL FLOOR PLAN

SCALE:3/32"=1'-0"

THE SEAL APPEARING ON THIS DOCUMENT WAS AUTHORIZED BY

ROGER G. MENDEZ, P.E. 93809

ON 05/29,2014

STATE OF TEXAS
ROGER G. MENDEZ
93809
REGISTERED PROFESSIONAL ENGINEER

1 ADDENDUM 2 05.29.14

RGM ENGINEERING

CITY OF SAN ANTONIO
D9 LIBRARY REMODEL/ADDITION

Addendum - 2
ATTACHMENT - SM1.1-1

2515 E. EVANS ROAD,SAN ANTONIO, TEXAS 78258

DUCTLESS SPLIT SYSTEM SCHEDULE

INDOOR UNIT	MARK	FCU-1	FCU-2	
	SERVES	IT ROOM	IT ROOM	
	TYPE	HIGH WALL	HIGH WALL	
	AIRFLOW (CFM)	750	800	
	TOTAL COOLING (MBH)	18	24	
	HEATING (KW)	-	-	
	VOLTS/PHASE/HERTZ	208/1/60	208/1/60	
	MCA	1	1	
	MOCP	15	15	
	MANUFACTURER	MITSUBISHI	MITSUBISHI	
	MODEL NUMBER	PKA-A18HA4	PKA-A24KA4	
OUTDOOR UNIT	MARK	CU-1	CU-2	
	VOLTS/PHASE/HERTZ	208/1/60	208/1/60	
	MCA	13	18	
	MOCP	15	25	
	MANUFACTURER	MITSUBISHI	MITSUBISHI	
	SEER	15.3	17	
	MODEL NUMBER	PUY-A18NHA4	PUY-A24NHA4	
NOTES:		1, 2, 3, 4	1, 2, 3, 4	

NOTES:

1. PROVIDE REFRIGERANT PIPING IN ACCORDANCE WITH MFR'S RECOMMENDATIONS.
2. PROVIDE FULL SIZE CONDENSATE DRAIN TO BREAK AREA TAIL-PIECE.
3. PROVIDE WALL MOUNTED THERMOSTAT.
4. PROVIDE CONDENSATE PUMP.

THE SEAL APPEARING ON THIS DOCUMENT WAS AUTHORIZED BY
ROGER G. MENDEZ, P.E. 93809
ON 05/29, 2014

STATE OF TEXAS
ROGER G. MENDEZ
93809
REGISTERED PROFESSIONAL ENGINEER

1

1 ADDENDUM 2 05.29.14

RGM ENGINEERING

CITY OF SAN ANTONIO
D9 LIBRARY REMODEL/ADDITION

Addendum - 2
ATTACHMENT - SM2.1-1

2515 E. EVANS ROAD,SAN ANTONIO, TEXAS 78258

PM	M	E	P	CAD
MG	TP	MG	HN	CD/RAM/JH

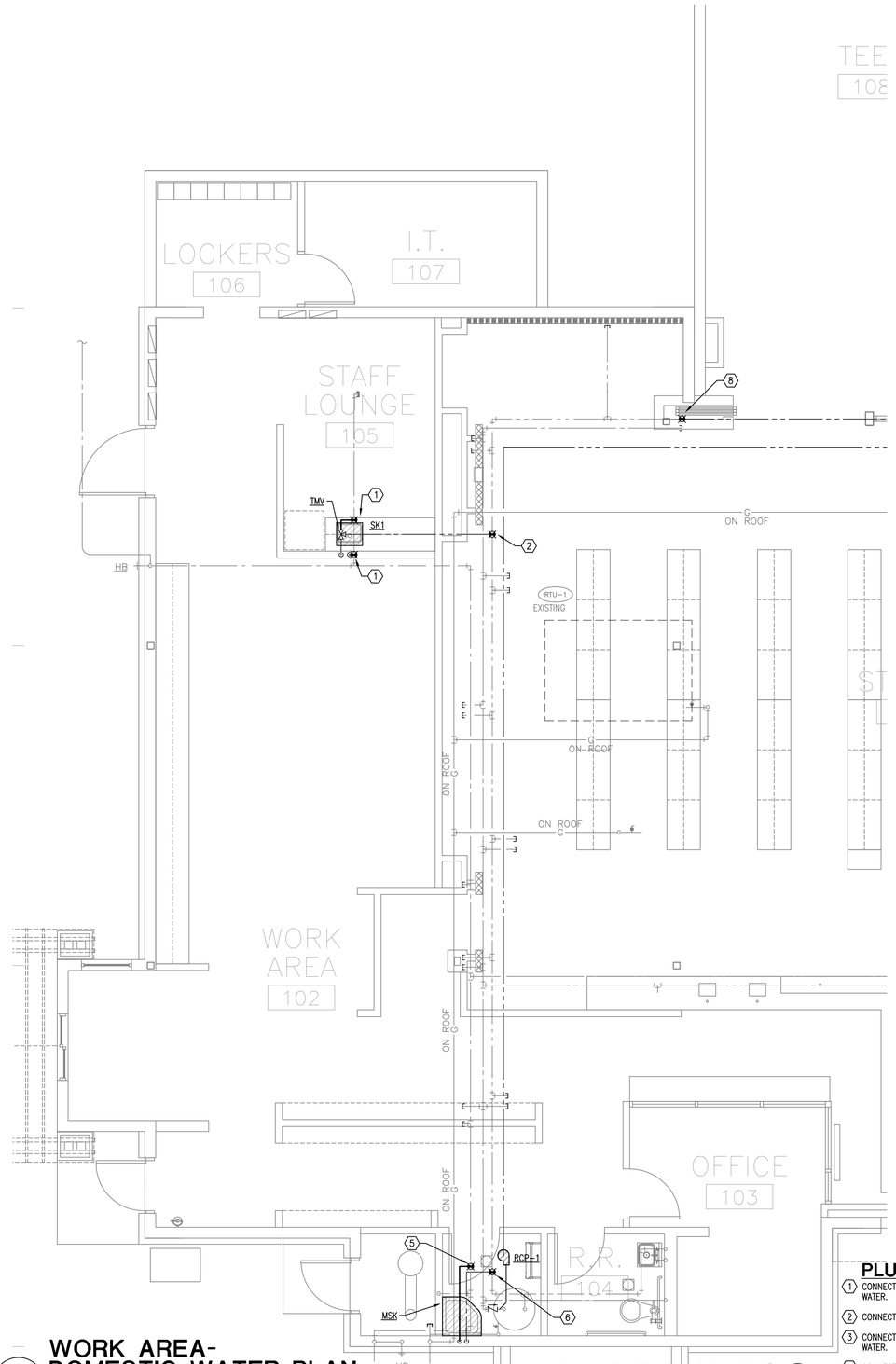

1 WORK AREA- DOMESTIC WATER PLAN

SCALE:1/4"=1'-0"

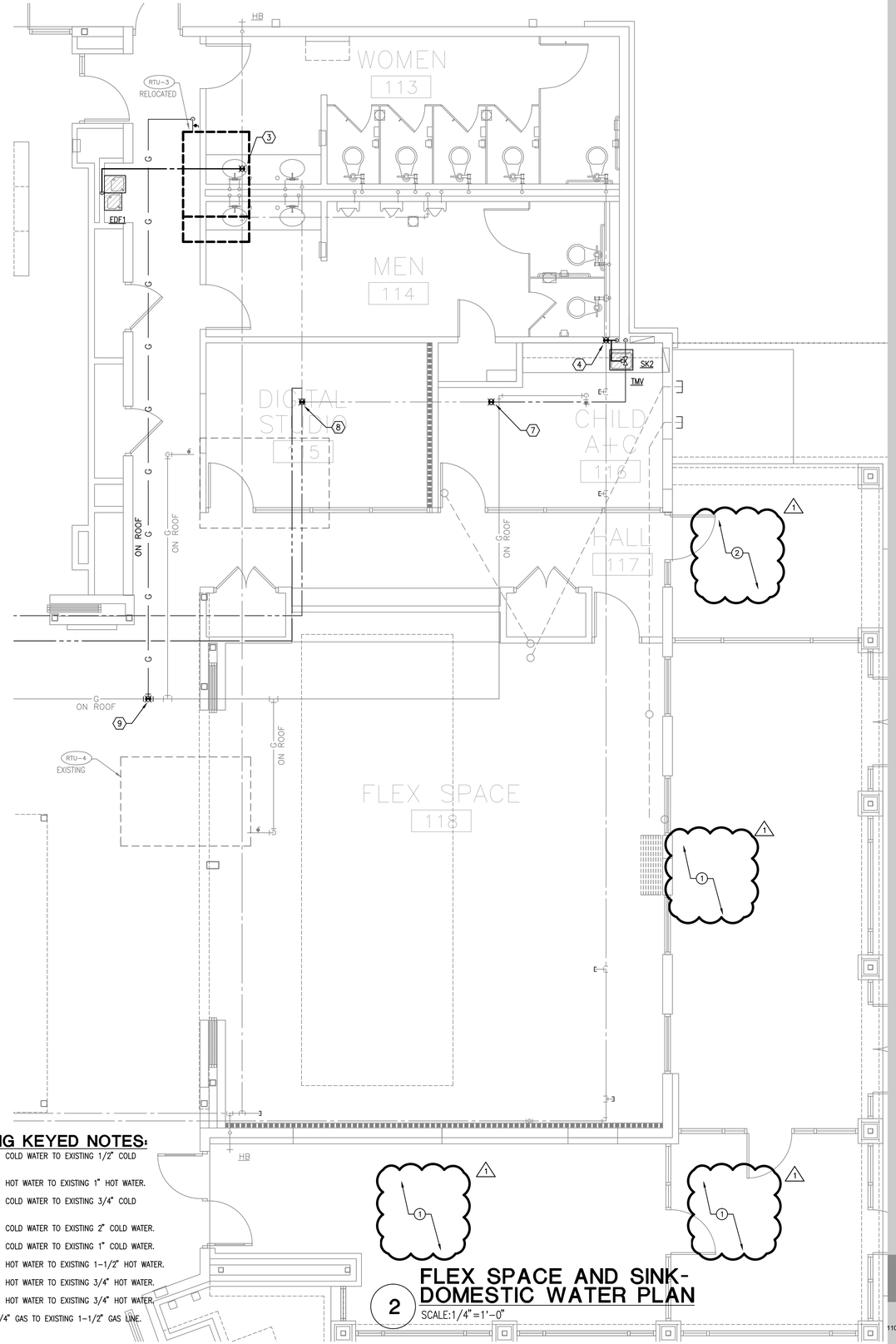

2 FLEX SPACE AND SINK- DOMESTIC WATER PLAN

SCALE:1/4"=1'-0"

PLUMBING KEYED NOTES:

1. CONNECT NEW 1/2" COLD WATER TO EXISTING 1/2" COLD WATER.
2. CONNECT NEW 1/2" HOT WATER TO EXISTING 1" HOT WATER.
3. CONNECT NEW 1/2" COLD WATER TO EXISTING 3/4" COLD WATER.
4. CONNECT NEW 1/2" COLD WATER TO EXISTING 2" COLD WATER.
5. CONNECT NEW 1/2" COLD WATER TO EXISTING 1" COLD WATER.
6. CONNECT NEW 1/2" HOT WATER TO EXISTING 1-1/2" HOT WATER.
7. CONNECT NEW 1/2" HOT WATER TO EXISTING 3/4" HOT WATER.
8. CONNECT NEW 3/4" HOT WATER TO EXISTING 3/4" HOT WATER.
9. CONNECT NEW 1-1/4" GAS TO EXISTING 1-1/2" GAS LINE.

FIRE PROTECTION GENERAL NOTES:

1. PROVIDE NEW WET PIPING SYSTEM AS REQUIRED AT ALL OF BASE BUILDING. FIRE SPRINKLER CONTRACTOR TO VERIFY EXACT ROUTING AND HEAD LOCATIONS PER NFPA 13 REQUIREMENTS.

FIRE PROTECTION KEYED NOTES:

1. EXISTING DRY PIPING SYSTEM TO BE MODIFIED AS REQUIRED. FIRE SPRINKLER CONTRACTOR MODIFY PER NFPA 13 REQUIREMENTS.
2. EXISTING DRY PIPING SYSTEM TO REMAIN.

PLUMBING GENERAL NOTES:

1. FIRE PROTECTION CONTRACTOR TO ADJUST HEADS PER CODE COMPLIANT FOR LIBRARY USE.

CITY OF SAN ANTONIO

DISTRICT 9 LIBRARY
REMODEL / ADDITION

2515 E. EVANS ROAD
SAN ANTONIO, TEXAS 78258

1 ADDENDUM 2 06.06.14

RGM ENGINEERING

TEXAS REGISTERED
ENGINEERING FIRM F-10487
700 N. ST. MARY'S
SUITE 1225
SAN ANTONIO, TX 78205
WWW.RGMENGINEERING.NET
PHONE: 210.299.4522
FAX: 210.299.4525

DRAWING COORDINATION

ARCHITECTURAL, CIVIL, STRUCTURAL, MECHANICAL, ELECTRICAL AND LANDSCAPE DRAWINGS ARE INTERRELATED. GENERAL CONTRACTOR AND ALL SUB-CONTRACTORS SHALL REVIEW AND COORDINATE THE ENTIRE SET OF DRAWINGS AND PROJECT MANUAL.

PLUMBING DOMESTIC WATER FLOOR PLAN
13.24.000

P1.2

JUNE 2014

ALVIDREZ Architecture Inc.

MEMBER AMERICAN INSTITUTE OF ARCHITECTS
110 BROADWAY SAN ANTONIO, TEXAS 78205 T: 210.299.8100 F: 210.299.8102

FILE NAME: 14-016 P1.2 Plumbing Domestic Water Floor Plan.dwg
FILE LOCATION: N:\2014\14-016 D9-Library\Plumbing\
DATE: Tue, 10 Jun 2014 - 11:42am
PLOTTED BY: HenryN

PM	M	E	P	CAD
MG	TP	MG	HN	CD/RAM/

PLUMBING FIXTURE SCHEDULE

MARK	ITEM	MANUFACTURER	MODEL NO	UTILITIES CW	UTILITIES HW	UTILITIES W	UTILITIES VT	NOTES
SK1	HAND SINK COUNTER TOP (ADA)	ELKAY	MODEL LRAD-1918 – OFF CENTER REAR COUNTER MOUNTED STAINLESS STEEL, BOWL SIZE 11-1/2"X16"X4", FAUCET MOUNTING 4" CENTERS. FAUCET: AMERICAN STANDARD "MONTERREY" TWO-HANDLE CENTERSET LAVATORY FAUCET #7502.170VP WITH VANDAL RESISTANT 6" WRIST BLADE HANDLES, 1.0 GPM LAMINAR FLOW OUTLET, GRID STRAINER AND 17 GA TAILPIECE AND TRAP. INSULATE HOT & COLD WATER AND DRAIN LINES WITH TRU-BRO LAVGARD INSULATION. PROVIDE WITH MCGUIRE 2165LK (LOOSE KEY) SUPPLY KIT, FLEXIBLE COPPER TUBE CHROME PLATED RISERS. P-TRAP: MCGUIRE MODEL # 8902, 1-1/4" X 1-1/2" X 17-GAUGE, CHROME PLATED CAST BR APPROVED EQUAL.	1/2"	1/2"	2"	1 1/2"	
SK2	HAND SINK COUNTER TOP (ADA)	ELKAY	MODEL LRAD-1918 – OFF CENTER REAR COUNTER MOUNTED STAINLESS STEEL, BOWL SIZE 11-1/2"X16"X4", FAUCET MOUNTING 4" CENTERS. FAUCET: AMERICAN STANDARD "MONTERREY" SINGLE CONTROL CENTERSET LAVATORY FAUCET #6114.115 WITH METAL HANDLE, .5 GPM MAXIUM FLOW RATE, METAL POP-UP DRAIN WITH 1-4/4" TAILPIECE. INSULATE HOT & COLD WATER AND DRAIN LINES WITH TRU-BRO LAVGARD INSULATION. PROVIDE WITH MCGUIRE 2165LK (LOOSE KEY) SUPPLY KIT, FLEXIBLE COPPER TUBE CHROME PLATED RISERS. P-TRAP: MCGUIRE MODEL # 8902, 1-1/4" X 1-1/2" X 17-GAUGE, CHROME PLATED CAST BR APPROVED EQUAL.	1/2"	–	2"	1 1/2"	
EDF1	DRINKING FOUNTAIN	ELKAY	ELKAY MODEL EZSTL8C TWO STATION WALL MOUNT WATER COOLER BARRIER FREE ACCESS, 9.7 GPH OF 50°F DRINKING WATER, 370 WATTS, 4.0 FLA. 89 LBS. ADA COMPLIANT. TWO TONE GRAY UPPER SHROUD WITH TEXTURED GRAY LOWER SHROUD, STAINLESS STEEL BASIN. EASY TOUCH CONTROLS ON FRONT, LEFT AND RIGHT OF EACH UNIT.	1/2"	–	2"	1 1/2"	
MSK	MOP SINK	ZURN	UTILITY / SERVICE SINKS: Z5850 – CAST IRON CUSTODIAL FLOOR SINK DRAIN ASSEMBLY: -D3 – 3" IPS CONNECTION DRAIN ASSEMBLY FAUCET: Z843M1-XL – FAUCET (XL), SERVICE SINK; 'M' 6-1/2" VB, WALL BRACE, HK ACCESSORY: -WG – WALL GUARD (2 PANELS INDICATE SIZE) ACCESSORY: -NHG – PVC DRAIN GASKET DESIGNED FOR NO HUB PIPE ACCESSORY: -HH-MH-RG – HOSE AND BRACKET WITH MOP HANGER AND RIM GUARD	1/2"	1/2"	3"	1 1/2"	

THERMOSTATIC MIXING VALVE SCHEDULE

MARK	TEMP. IN DEG. F	TEMP. OUT DEG. F	MIN. FLOW GPM	MAX. FLOW GPM	CABINET	VALVE FINISH	THERMOMETER	UNION CONNECT.	MANUFAC. / MODEL	PRESS DIFF.
TMV	140	110	.5	14	OPTIONAL	BRONZE	YES	YES	SYMMONS MODEL #7-230-CK-M B-125.3-05/ASME A112.18.1-05 1017 & 1070 CERTIFIED. OR SYMMONS MODEL #7-230B-CK-M B-125.3/ASME A112.18.1-05 1017 & 1070 CERTIFIED. WITH FULLY RECESSED STEEL CABINET, WHITE ENAMEL FINISH	5

RECIRCULATING SCHEDULE

MARK	DESCRIPTION	MARK	TOTAL HEAD (FT.)	HP	ELECTRICAL VOLTS/PHASE/Hz	MANUFACTURER & MODEL
RCP1	WATER HEATER RE-CIRCULATING PUMP	5.0	10.0	1/12	115/1/60	SERIES PL MODEL # PL-30B

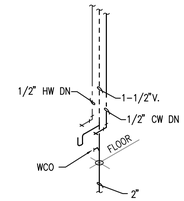

1 RISER - SINK
SCALE: NOT TO SCALE

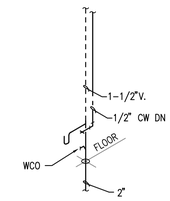

2 RISER - SINK
SCALE: NOT TO SCALE

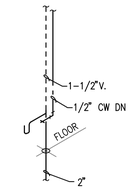

3 RISER - EDF1
SCALE: NOT TO SCALE

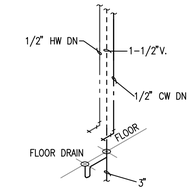

4 RISER - MOP SINK
SCALE: NOT TO SCALE

FIRE PROTECTION SPRINKLER SYSTEM

PART 1 – GENERAL

1.1 SUMMARY

A. THIS SECTION INCLUDES WET AND DRY PIPE SPRINKLER SYSTEM:
B. PROVIDE SYSTEM DESIGN, INSTALLATION & CETIFICATION.
C. THE BUILDING IS SERVED BY AN EXISTING WET AND DRY PIPE SYSTEM.

1.2 SYSTEM DESCRIPTION

A. MODIFY EXISTING SYSTEM TO PROVIDE COVERAGE FOR THE ENTIRE RENOVATED SPACE AS REQUIRED BY NFPA.
B. DETERMINE VOLUME AND INCOMING PRESSURE FROM EXISTING WATER SUPPLY.
C. INTERFACE SYSTEMS WITH BUILDING FIRE DETECTION AND ALARM SYSTEM AS REQUIRED.

1.3 SUBMITTALS

A. PRELIMINARY SHOP DRAWINGS: PRIOR TO DETAILED SUBMISSION, SUBMIT PRELIMINARY LAYOUT OF FINISHED CEILING AREAS INDICATING ONLY HEAD LOCATIONS COORDINATED WITH CEILING INSTALLATION.
B. SHOP DRAWINGS: IF REQUIRED PROVIDE HYDRAULIC CALCULATION. PROVIDE DETAILED PIPE LAYOUT, HANGERS AND SUPPORTS, COMPONENTS & ACCESSORIES. INDICATE SYSTEM CONTROLS.
C. PRODUCT DATA: PROVIDE DATA ON SPRINKLER HEADS, VALVES, AND SPECIALTIES, INCLUDING MANUFACTURES CATALOG INFORMATION. SUBMIT PERFORMANCE RATINGS ROUGH-IN DETAILS, WEIGHTS, SUPPORT REQUIREMENTS AND PIPING CONNECTIONS.
D. SUBMIT REQUIRED DATA TO AUTHORITY HAVING JURISDICTION FOR APPROVAL PRIOR TO SUBMISSION TO ARCHITECT/ENGINEER. SUBMIT PROOF OF APPROVAL TO ARCHITECT/ENGINEER.

1.4 PROJECT RECORD DOCUMENTS

A. RECORD ACTUAL LOCATIONS OF PIPING, SPRINKLER HEADS AND DEVIATIONS OF PIPING. INDICATE DRAIN AND TEST LOCATIONS.
B. MAINTENANCE DATA: INCLUDE COMPONENTS OF SYSTEM, SERVICING REQUIREMENTS, RECORD DRAWINGS, INSPECTION DATA, REPLACEMENT PART NUMBERS AND AVAILABILITY, LOCATION AND NUMBERS OF SERVICE AGENCY.
C. INCLUDE EXISTNG FIRE PROTECTION VALVES.
D. SUBMIT REQUIRED DATA TO AUTHORITY HAVING JURISDICTION FOR APPROVAL PRIOR TO SUBMISSION TO ARCHITECT/ENGINEER. SUBMIT PROOF OF APPROVAL TO ARCHITECT/ENGINEER.

1.5 QUALIITY ASSURANCE

A. PERFORM WORK IN ACCORDANCE LATEST ADOPTED CODES, NFPA 13, INTERNATIONAL FIRE CODE, FIRE MARSHALS OFFICE AND LOCAL AMENDMENTS.
B. EQUIPMENT AND COMPONENTS SHALL BEAR UL AND FM LABEL OR MARKING.
C. ALL ELECTRICAL SHALL COMPLY WITH DIVISION 16.

1.6 QUALIFICATIONS

A. INSTALLER SHALL BE A COMPANY LICENSED BY THE STATE OF TEXAS SPECIALIZING IN PERFORMING WORK OF THIS SECTION WITH A MINIMUM OF THREE YEARS EXPERIENCE.

1.7 REGULATORY REQUIREMENTS

A. DESIGN AND INSTALLATION SHALL BEAR STAMP OF APPROVAL OF THE AUTHORITY HAVING JURISDICTION.

1.8 DELIVERY, STORAGE AND HANDLING

A. DELIVER, STORE AND PROTECT PRODUCTS AS REQUIRED.

PART 2 – PRODUCTS

2.1 SPRINKLER HEADS

A. MANUFACTURER
   A. CENTRAL.
   B. GEM.
   C. VIKING.
   HEAD TYPES
   A. SEMI-RECESSED HEADS IN GYPSUM BOARD AND LAY-IN CEILINGS.

PART 3 – EXECUTION

3.1 PREPARATION

A. COORDINATE WORK WITH ALL DISCIPLINES.

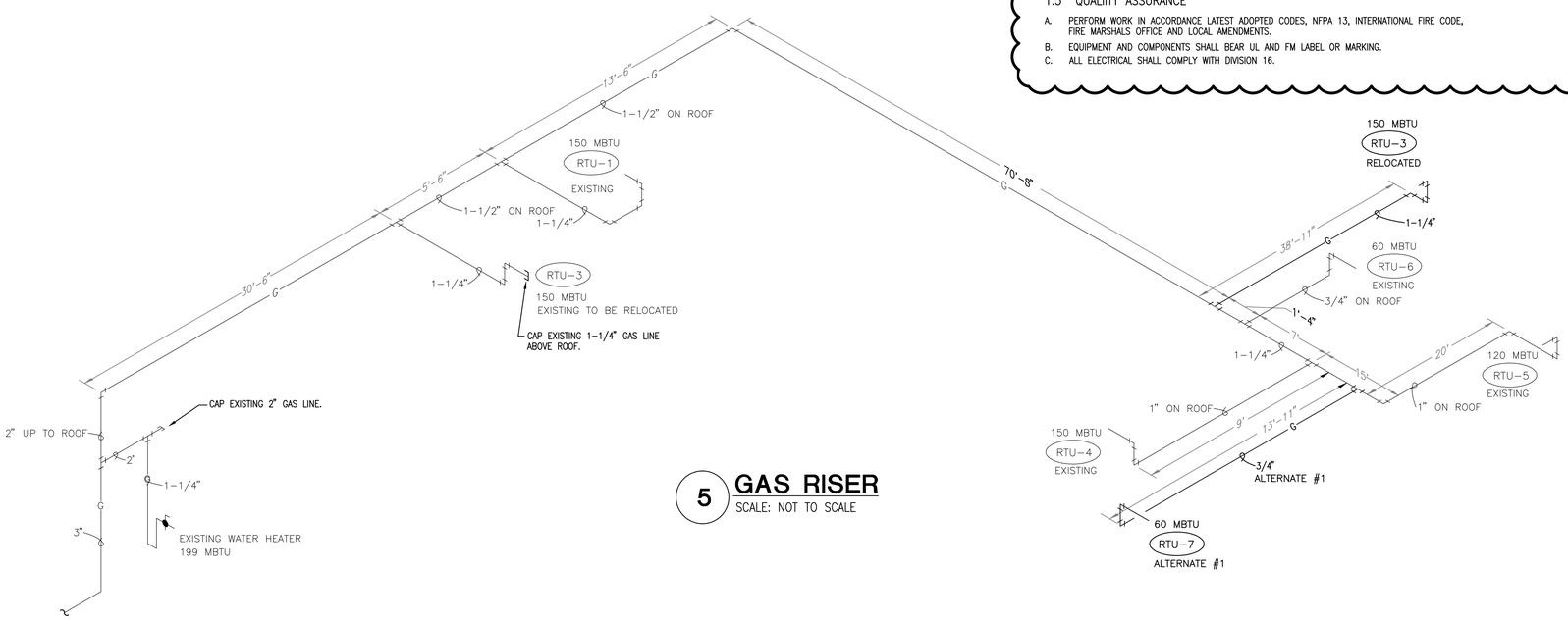

5 GAS RISER
SCALE: NOT TO SCALE

GAS EQUIPMENT SCHEDULE

EQUIPMENT	GAS	SIZE
FRYER (REMOVED)	80,000 BTUH	3/4"
FRYER (REMOVED)	80,000 BTUH	3/4"
FRYER (REMOVED)	80,000 BTUH	3/4"
GRIDDLE (REMOVED)	65,000 BTUH	3/4"
CHARBROILER (REMOVED)	150,000 BTUH	1"
WATER HEATER (REMOVED)	199,000 BTUH	1-1/4"
WATER HEATER	199,000 BTUH	1-1/4"
MISC. TOTAL =	199,000 BTUH	
A/C SYSTEM =	630,000 BTUH	
(ALTERNATE 1) A/C UNIT =	630,000 BTUH	
	829,000	

TOTAL SPACE DEMAND = 829,000 BTUH (EXISTING)1-1/2" @ 150'

EXISTING GAS PRESSURE IS 2 LBS. CONTRACTOR SHALL VERIFY PRESSURE REGULATOR REQUIREMENTS WITH EQUIPMENT.

CITY OF SAN ANTONIO

DISTRICT 9 LIBRARY
REMODEL / ADDITION

2515 E. EVANS ROAD
SAN ANTONIO, TEXAS 78258

1 ADDENDUM 2 06.06.14

RGM ENGINEERING
TEXAS REGISTERED
ENGINEERING FIRM F-10487
700 N. ST. MARY'S
SUITE 1225
SAN ANTONIO, TX 78205
WWW.RGMENGINEERING.NET
PHONE: 210.299.4522
FAX: 210.299.4525

DRAWING COORDINATION

ARCHITECTURAL, CIVIL, STRUCTURAL, MECHANICAL, ELECTRICAL AND LANDSCAPE DRAWINGS ARE INTERRELATED. GENERAL CONTRACTOR AND ALL SUB-CONTRACTORS SHALL REVIEW AND COORDINATE THE ENTIRE SET OF DRAWINGS AND PROJECT MANUAL.

PLUMBING SCHEDULES AND DETAILS
13.24.000

P2.1

JUNE 2014

THE SEAL APPEARING ON THIS DOCUMENT WAS AUTHORIZED BY ROGER G. MENDEZ, P.E. 93809 ON 06/06/2014

STATE OF TEXAS
ROGER G. MENDEZ
93809
REGISTERED PROFESSIONAL ENGINEER

ALVIDREZ Architecture Inc.
MEMBER AMERICAN INSTITUTE OF ARCHITECTS
110 BROADWAY SAN ANTONIO, TEXAS 78205 T: 210.299.8100 F: 210.299.8102

FILE NAME: 14-016 P2.1 Plumbing Schedules and Details.dwg
FILE LOCATION: N:\2014\14-016 D9-Library\Plumbing\
DATE: Tue, 10 Jun 2014 - 11:38am
PLOTTED BY: HenryN

PM	W	E	P	CAD
MG	TP	MG	HN	CD/RAM/JH

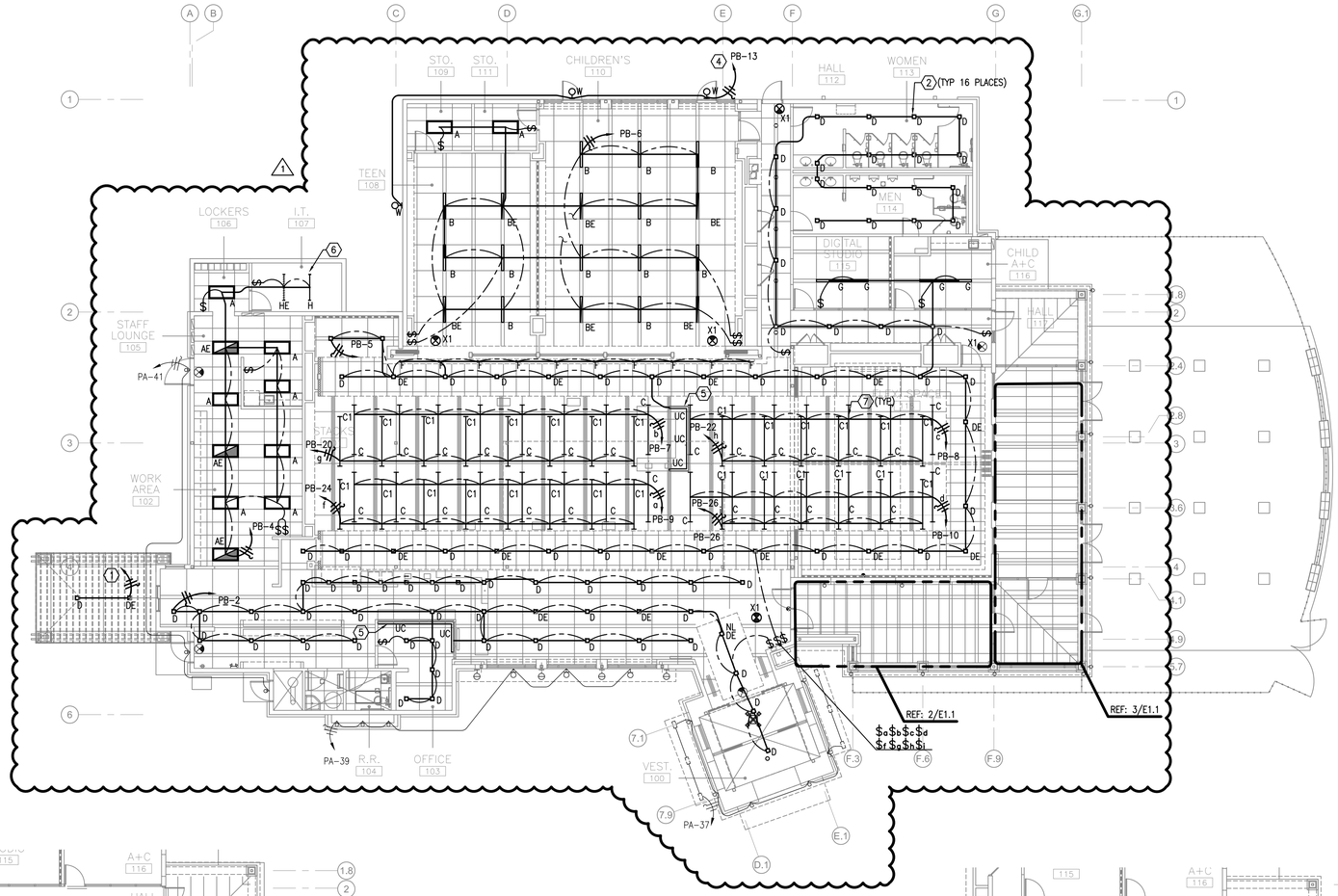

1 LIGHTING FLOOR PLAN

SCALE: 3/32"=1'-0"

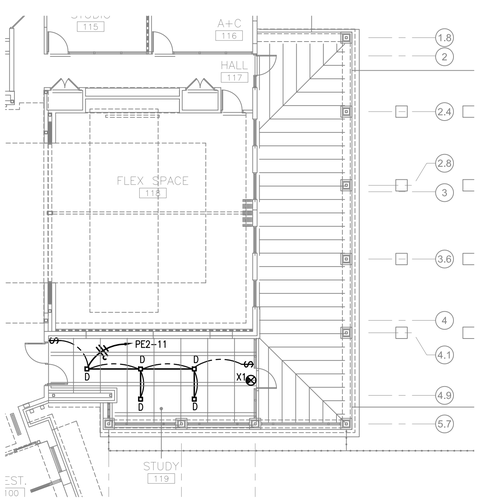

2 LIGHTING FLOOR PLAN - ALTERNATE #1

SCALE: 3/32"=1'-0"

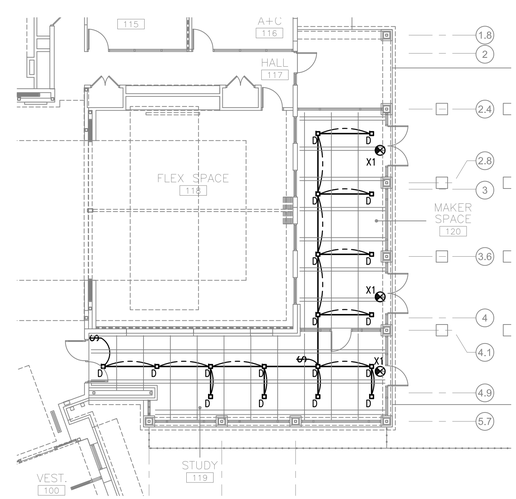

3 LIGHTING FLOOR PLAN - ALTERNATE #2

SCALE: 3/32"=1'-0"

GENERAL LIGHTING NOTES

1. EMERGENCY LIGHTS ARE TO HAVE THEIR BALLAST CONNECTED TO THE NEAREST UNSWITCHED LIGHTING CIRCUIT.

LIGHTING KEYED NOTES:

1. CONNECT TO SALVAGED OUTDOOR LIGHTING CIRCUIT
2. REPLACE EXISTING LOW-VOLTAGE FIXTURES WITH NEW TYPE 'D' AS SHOWN. PATCH AND REPAIR OPENING AS REQUIRED TO MATCH SURROUNDING FINISH.
3. RE-CIRCUIT RESTROOM LIGHTS AS SHOWN.
4. ROUTE THROUGH EXISTING TIME CLOCK. UPGRADE AS REQUIRED.
5. COORDINATE LENGTH OF UNDERCOUNTER ACCENT LIGHTS WITH MILLWORK SHOP DRAWINGS AND PLACEMENT WITH ARCHITECTURAL DETAILS. MOUNT POWER SUPPLY HIDDEN FROM VIEW AND ACCESSIBLE.
6. COORDINATE LOCATION OF LIGHTS WITH EQUIPMENT IN ROOM.
7. TYPE 'C1' FIXTURE TO BE IN CEILING SPACE. TYPE 'C' FIXTURE TO BE RECESSED WITH CEILING FOR DOWNWARD LIGHT. COORDINATE PLACEMENT WITH CEILING MANUFACTURER.

CITY OF SAN ANTONIO

DISTRICT 9 LIBRARY
REMODEL / ADDITION

2515 E. EVANS ROAD
SAN ANTONIO, TEXAS 78258

1 ADDENDUM 2 06.06.14

RGM ENGINEERING

TEXAS REGISTERED
ENGINEERING FIRM F-10487
700 N. ST. MARY'S
SUITE 1225
SAN ANTONIO, TX 78205
WWW.RGMENGINEERING.NET
PHONE: 210.299.4522
FAX: 210.299.4525

DRAWING COORDINATION

ARCHITECTURAL, CIVIL, STRUCTURAL, MECHANICAL, ELECTRICAL AND LANDSCAPE DRAWINGS ARE INTERRELATED. GENERAL CONTRACTOR AND ALL SUB-CONTRACTORS SHALL REVIEW AND COORDINATE THE ENTIRE SET OF DRAWINGS AND PROJECT MANUAL.

ELECTRICAL LIGHTING
FLOOR PLAN
13.24.000

E1.1

JUNE 2014

THE SEAL APPEARING ON THIS DOCUMENT WAS AUTHORIZED BY
ROGER G. MENDEZ, P.E. 93809
ON 06/06,2014

STATE OF TEXAS
ROGER G. MENDEZ
93809
REGISTERED PROFESSIONAL ENGINEER

ALVIDREZ
Architecture Inc.

MEMBER AMERICAN INSTITUTE OF ARCHITECTS
110 BROADWAY □ SAN ANTONIO, TEXAS □ 78205 □ T: 210.299.8100 □ F: 210.299.8102

FILE NAME: 14-016 E1.1 Electrical Lighting Floor Plan.dwg
FILE LOCATION: N:\2014\14-016 D9-Library\Electrical\
DATE: Fri, 06 Jun 2014 - 1:46pm
PLOTTED BY: jpeepin

PM	M	E	P	CAD
MG	TP	MG	HN	CD/RAM/JH

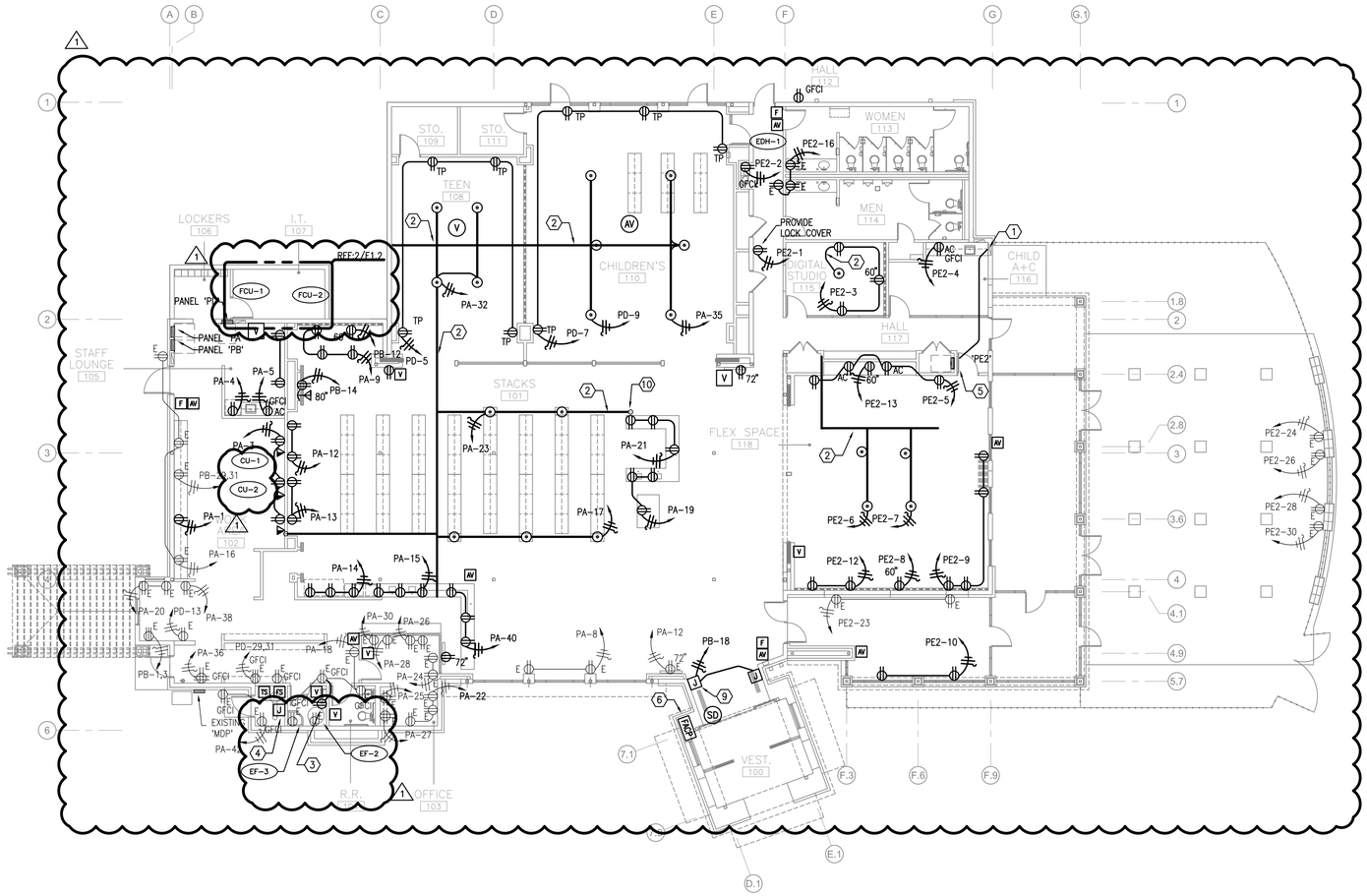

1 ELECTRICAL POWER FLOOR PLAN

SCALE:3/32"=1'-0"

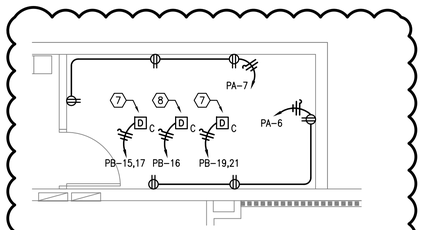

2 IT ROOM DETAIL

SCALE:1/4"=1'-0"

POWER GENERAL NOTES:

1. INTERCEPT 'PE2' FEEDER AND EXTEND TO NEW 'PE2' LOCATION.
2. 2" WIDE BY 2" DEEP, SAW CUT
3. PROVIDE RECEPTACLE FOR RETICULATING PUMP.
4. RECIRCUIT UNIT HEATER IN SPRINKLER ROOM TO PD-2,4.
5. ARCHITECT TO APPROVE NEW LOCATION FOR EXISTING PANEL, PRIOR TO ROUGH-IN.
6. NEW FACP. PROVIDE DEVICES REQUIRED FOR COVERAGE IN FULL COMPLIANCE WITH APPLICABLE CODES.
7. 7' SO DROP CORD WITH L6-20R RECEPTACLE AT END.
8. 7' SO DROP CORD WITH L5-20R RECEPTACLE AT END.
9. CONNECT TO RFI PANELS.
10. STUB UP IN MILLWORK.

LEGEND:

- EXISTING RECEPTACLE AND CIRCUIT; CONTRACTOR TO MAINTAIN EXISTING CIRCUIT
- TAMPER PROOF RECEPTACLE

CITY OF SAN ANTONIO

DISTRICT 9 LIBRARY
REMODEL / ADDITION

2515 E. EVANS ROAD
SAN ANTONIO, TEXAS 78258

1 ADDENDUM 2 05.29.14

RGM ENGINEERING

TEXAS REGISTERED
ENGINEERING FIRM F-10487
700 N. ST. MARY'S
SUITE 1225
SAN ANTONIO, TX 78205
WWW.RGMENGINEERING.NET
PHONE: 210.299.4522
FAX: 210.299.4525

DRAWING COORDINATION

ARCHITECTURAL, CIVIL, STRUCTURAL, MECHANICAL, ELECTRICAL AND LANDSCAPE DRAWINGS ARE INTERRELATED. GENERAL CONTRACTOR AND ALL SUB-CONTRACTORS SHALL REVIEW AND COORDINATE THE ENTIRE SET OF DRAWINGS AND PROJECT MANUAL.

ELECTRICAL POWER
FLOOR PLAN
13.24.000

E1.2

JUNE 2014

ADDENDUM NO.2

THE SEAL APPEARING ON THIS DOCUMENT WAS AUTHORIZED BY
ROGER G. MENDEZ, P.E. 93809
ON 06/05,2014

STATE OF TEXAS
ROGER G. MENDEZ
93809
REGISTERED PROFESSIONAL ENGINEER

ALVIDREZ
Architecture Inc.

MEMBER AMERICAN INSTITUTE OF ARCHITECTS
110 BROADWAY □ SAN ANTONIO, TEXAS □ 78205 □ T: 210.299.8100 □ F: 210.299.8102

FILE NAME: 14-016 E1.2 Electrical Power Floor Plan.dwg
FILE LOCATION: N:\2014\14-016 09-Library\Electrical\
DATE: Thu, 05 Jun 2014 - 1:30pm
PLOTTED BY: jpdepith

PROJECT TITLE: D9 LIBRARY
PROJECT NUMBER: #14-034

EQUIPMENT CONNECTION SCHEDULE

EQUIPMENT TAG	VOLTAGE / PHASE	KW HEAT	VOLTAGE / PHASE	MOTOR (HP)	EQUIPMENT (FLA)	EQUIPMENT (MCA)	OCP	DISCONNECTING MEANS	ENCLOSURE NEMA RATING	Wire & Conduit Size	Circuit Number	Notes
RTU	HEATER DATA											
RTU-5 (ALT. NO. 1)	208V/3					21.4	30/3	30A/NF/3P	N3R	SEE PANEL SCHEDULE	MDP-26,28,30	1
CONDENSER UNITS												
CU-1			208V/1			13	15	OUTLET		SEE PANEL SCHEDULE	PD-1,3	1
FCU												2
CU-2			208V/1			18	25	OUTLET		SEE PANEL SCHEDULE	PD-6,8	1
FCU-2												2
DUCTHEATER												
EDH-1	208V/3	28			78		90/3	100A/NF/3P	N1	SEE PANEL SCHEDULE	MDP-32,34,36	1
EXAUST FANS												
EF-2			120/1	1/6	4.4		20/1	30A/NF/2P/N1		2-#12, #12 GND IN 1/2"C	LIGHTING CKT	3
EF-3			120/1	1/6	4.4		20/1	30A/NF/2P/N1		2-#12, #12 GND IN 1/2"C	LIGHTING CKT	3
WATERHEATER												
EWH-1 (EXISTING)												

1

NOTES:
1. CONTROLS PROVIDED BY DIVISION 15, INSTALLED AND WIRED THROUGH DIVISION 16
2. ONE POINT OF CONNECTION. WIRING BETWEEN EXTERIOR UNIT AND UINTERIOR UNIT BY DIVISION 15.
3. CONTROLLED PER LIGHT SWITCH

GENERAL NOTES:

REFERENCE SHEET E2.1

THE SEAL APPEARING ON THIS DOCUMENT WAS AUTHORIZED BY
ROGER G. MENDEZ, P.E. 93809
ON 06/05, 2014

STATE OF TEXAS
ROGER G. MENDEZ
93809
REGISTERED PROFESSIONAL ENGINEER

1 ADDENDUM 2 05.29.14

RGM ENGINEERING

CITY OF SAN ANTONIO
D9 LIBRARY REMODEL/ADDITION

Addendum - 2
ATTACHMENT - SE2.1–1

2515 E. EVANS ROAD,SAN ANTONIO, TEXAS 78258

LIGHTING FIXTURE SCHEDULE

TAG TYPE	MANUFACTURER CATALOG NO.	MOUNTING	FIXTURE LAMPS QTY	LAMP TYPE	WATTS PER LAMP	INPUT VA	VOLTAGE	DESCRIPTION	KEYED NOTES
A	HE WILLIAMS #50G-S24-328-SA12125-EB2/2-120	LAY-IN	3	F28T5 4100K	28	84	MVOLT	2X4 LENSED TROFFER TROFFER, DUAL BALLAST FOR DUAL SWITCHING FOR ADMIN AREAS	
AE	HE WILLIAMS #50G-S24-328-SA12125-EB2/2-120-EM	LAY-IN	2	F28T5 4100K	28	56	MVOLT	SAME AS TYPE 'A' EXCEPT WITH EMERGENCY BALLAST	
B	AXIS LIGHTING #B6R-S-FL-4-NL4-T5-2-W-UNV-TB-1	LAY-IN	2	28W T5	28	56	MVOLT	6"x4' LENSED TROFFER FOR CHILDRENS AREAS	
BE	AXIS LIGHTING #B6R-S-FL-4-NL4-T5-2-W-UNV-TB-1-EM	LAY-IN	2	28W T5	28	56	MVOLT	SAME AS TYPE 'B' EXCEPT WITH EMEREGNCY BALLAST	
C	HE WILLIAMS #73-8-254T5H-EB2-UNV	SURFACE	4	54WT5HO	54	216	MVOLT	6"x4' STRIP FIXTURE FOR STACKS AREA, 2-LAMP CROSS SECTION	
1 C1	HE WILLIAMS #73-8-228T5S-EB2-UNV	SURFACE	2	54WT5HO	54	108	MVOLT	6"x4' STRIP FIXTURE FOR STACKS AREA, 1-LAMP CROSS SECTION	
D	HE WILLIAMS #HET-1-126Q-A-EB1-UNV	RECESSED	1	26WTTT	26	26	MVOLT	12" SQUARE DOWNLIGHT WITH LENS	
DE	HE WILLIAMS #HET-1-126Q-A-EB1-UNV-EM	RECESSED	1	26WTTT	26	26	MVOLT	SAME AS TYPE 'D' EXCEPT WITH EMEREGNCY BALLAST	
F	A2LED-2A9LED-12LXXK9-FL35	RECESSED					MVOLT	WALL WASHER STONE WALL	
G	RKI #PW-496-OP-BZ-24L1HE	WALL	1	24L1HE	24	24	MVOLT	FLUORESCENT INTERIOR WALL SCONCE	
1 HE	H.E. WILLIAMS #76-4-2-32-WG-EB1-UNV	CHAIN HUNG	2	32WT8	32	64	MVOLT	4' STRIP FIXTURE, WITH WIREGUARD AND EMERGENCY BALLAST.	
UC	ILLUMINII KILO#K-** -41K-SSO-H-C	SURFACE	60	LED	60	60	MVOLT	UNDERCOUNTER LED FIXTURE. PROVIDE WITH ALL REQUIRED HAREWARE	
W	RKI #SW-[illegible]22-HO-2[illegible]120-OP-[illegible]	WALL PACK	2	[illegible]C18	[illegible]	58	120 / 277	WALL PACK	
X1	LITHONIA #LE-S-W-1-R-120/277	WALL/CEILING	1	LED	1	1	120 / 277	SINGLE FACE EXIT LIGHT	1
X2	LITHONIA #LE-S-W-2-R-120/277	WALL/CEILING	1	LED	1	1	120 / 277	DOUBLE FACE EXIT LIGHT	1
Y1	LITHONIA #AFN-BN-PREM-EXT	WALL	2	COMP. FL.	6	12	120 / 277	EXTERIOR EMERGENCY EGRESS FIXTURE	

LIGHTING FIXTURE SCHEDULE KEYED NOTES:

1) COORDINATE EXACT MOUNTING HEIGHT WITH ARCHITECT.

2) PROVIDE ZERO DEGREE BALLAST.

THE SEAL APPEARING ON THIS DOCUMENT WAS AUTHORIZED BY

ROGER G. MENDEZ, P.E. 93809

ON 06/06, 2014

STATE OF TEXAS
ROGER G. MENDEZ
93809
REGISTERED PROFESSIONAL ENGINEER

1 ADDENDUM 2 06.06.14

RGM ENGINEERING

CITY OF SAN ANTONIO
D9 LIBRARY REMODEL/ADDITION

Addendum - 2
ATTACHMENT - SE2.1–2

2515 E. EVANS ROAD,SAN ANTONIO, TEXAS 78258

PANELBOARD SCHEDULE

PANEL:	EXISTING PANEL 'PB'	MOUNTING:	RECESSED
PROJECT:	#14-016 D9 LIBRARY	TYPE:	
FED FROM	MDP	BUSSING:	
VOLTAGE:	208 120	MLO:	225A
PH/WIRE:	3 4W	MAIN C.B.:	
SUB-FEED LUGS:		A.I.C. RATING:	10K
CONDUIT/CONDUCTORS:		KEY NOTES:	

NOTE: ALL BRANCH CIRCUITS SHALL BE RUN IN EMT CONDUIT FROM PANEL TO DEVICE. WHERE CONDUIT SIZE IS NOT INDICATED E.C. MAY COMBINE SIMILAR TYPE CIRCUITS IN LARGER CONDUIT NOT TO EXCEED 40% FILL PER TABLES IN NEC 2008 AND PER TABLE 310.15 (B) (2) (a) FOR CONDUCTOR DERATING WHERE APPLICABLE. ALL OTHER BR. CKTS WITH #12 OR #10 CU. SHALL BE RUN IN 3/4"C.

CIRCUIT DESCRIPTION	CONDUIT SIZE	COND. SIZE (AWG)	NEUT SIZE (AWG)	E.G.C SIZE (AWG)	TYPE LOAD	LOAD VA	CKT BKR	CKT #	CKT #	CKT BKR	LOAD VA	TYPE LOAD	CONDUIT SIZE	COND. SIZE (AWG)	NEUT SIZE (AWG)	E.G.C SIZE (AWG)	CIRCUIT DESCRIPTION
EXISTING CIRCUIT					1	2185	20/1	1	2	20/1	944	2	3/4"	#10	#10	#10	LIGHTS - HALL & OFFICE 103
					1	2185	20/1	3	4	20/1	672	2	3/4"	#10	#10	#10	LIGHTS - WORK AREA 102
LIGHTS - STACKS 101	3/4"	#10	#10	#10	2	1048	20/1	5	6	20/1	1008	2	3/4"	#10	#10	#10	LIGHTS - CHILDRENS 110
LIGHTS - STACKS 101	3/4"	#10	#10	#10	2	1728	20/1	7	8	20/1	1512	2	3/4"	#10	#10	#10	LIGHTS - STACKS 101
LIGHTS - STACKS 101	3/4"	#10	#10	#10	2	1728	20/1	9	10	20/1	1512	2	3/4"	#10	#10	#10	LIGHTS - STACKS 101
LIGHTS - ALTERNATE	3/4"	#10	#10	#10	2	330	20/1	11	12	20/1	300	1	3/4"	#10	#10	#10	RCPTS - STACKS 101
LIGHTS - EXTERIOR	3/4"	#10	#10	#10	2	374	20/1	13	14	20/1	300	1	3/4"	#10	#10	#10	RCPTS - STACKS 101
RCPT- IT EQUIPMENT	3/4"	#10		#10	1	1200	20/2	15	16	20/1	300	1	3/4"	#10	#10	#10	RCPTS - IT EQUIPMENT
--		#10			1	1200		17	18	20/1							
RCPT- IT EQUIPMENT	3/4"	#10		#10	1	1200	20/2	19	20	20/1							
--					1	1200		21	22	20/1							
							20/1			20/1							
							20/1	25	26	20/1							
							20/1	27	28	20/1							
EXISTING CIRCUIT					1	730	20/1	29	30	20/1							
--					1	730	20/1	31	32	20/1							
							20/1	33	34	20/1							
							20/1	35	36	20/1							
							20/1	37	38	20/1							
							20/1	39	40	20/1							
							20/1	41	42	20/1							

1

CONNECTED LOADS SUMMARY	VA/PH	AMPS/PH
PHASE 'A'	8773	73
PHASE 'B'	8797	73
PHASE 'C'	4624	39
TOTALS	22194	62

PANELBOARD LOAD ANALYSIS	KVA	AMPS
1. TOTAL NEC DEMAND LOAD	24.10	66.9
2. ADD LARGEST MOTOR (25%)	0.00	0.0
3. ADD LIGHTINEG PER VA/SF (SEE NOTE 2	0.00	0.0
4. SUB-TOTAL LOAD	24.10	66.9
5. NOT USED.		
6. TOTAL NEC LOAD WITH FUTURE LOAD	24.10	66.9

LOAD ANALYSIS NOTES AND PANELBOARD TYPICAL NOTES:

1. REFER TO THE TYPICAL LOAD ANALYSIS NOTES ON THIS DRAWING SHEET.
2. REFER TO THE TYPICAL PANELBOARD KEYED NOTES ON THIS DRAWING SHEET.

PANELBOARD LOAD COMPUTATIONS - LOAD SUMMARY

TYPE	LOAD DESCRIPTION	SUB FEED	KVA	D.F.	DEMAND LOAD (KVA)
1	1. RECEPTACLES	0.00	11.53	NOTE 1	10.8
2	2. LIGHTING	0.00	10.66	125%	13.3
3	3. AIR CONDITIONING	0.00	0.00	100%	0.0
4	4. ELECTRIC HEATING	0.00	0.00	100%	0.0
5	5. MOTORS	0.00	0.00	100%	0.0
6	6. ELECT WATER HTG.	0.00	0.00	100%	0.0
7	7. ELEVATOR	0.00	0.00	100%	0.0
8	8. KITCHEN EQUIP.	0.00	0.00	65%	0.0
9	9. MISCELANEOUS	0.00	0.00	100%	0.0
10	10.EXT. LIGHTING	0.00	0.00	125%	0.0
	TOTAL KVA	0.00	22.20		24.10
	TOTAL AMPERES	0.0	61.6		66.9

REFERENCE SHEET E3.1

THE SEAL APPEARING ON THIS DOCUMENT WAS AUTHORIZED BY

ROGER G. MENDEZ, P.E. 93809

ON 05/29, 2014

STATE OF TEXAS
ROGER G. MENDEZ
93809
REGISTERED PROFESSIONAL ENGINEER

1 ADDENDUM 2 05.29.14

RGM ENGINEERING

CITY OF SAN ANTONIO
D9 LIBRARY REMODEL/ADDITION

Addendum - 2
ATTACHMENT - SE3.1-1

2515 E. EVANS ROAD,SAN ANTONIO, TEXAS 78258

PANELBOARD SCHEDULE

PANEL:	EXISTING PANEL 'PD'	MOUNTING:	RECESSED
PROJECT:	#14-016 D9 LIBRARY	TYPE:	
FED FROM	MDP	BUSSING:	
VOLTAGE:	208 120	MLO:	225A
PH/WIRE:	3 4W	MAIN C.B.:	
SUB-FEED LUGS:		A.I.C. RATING:	10K
CONDUIT/CONDUCTORS:		KEY NOTES:	

NOTE: ALL BRANCH CIRCUITS SHALL BE RUN IN EMT CONDUIT FROM PANEL TO DEVICE. WHERE CONDUIT SIZE IS NOT INDICATED E.C. MAY COMBINE SIMILAR TYPE CIRCUITS IN LARGER CONDUIT NOT TO EXCEED 40% FILL PER TABLES IN NEC 2008 AND PER TABLE 310.15 (B) (2) (a) FOR CONDUCTOR DERATING WHERE APPLICABLE. ALL OTHER BR. CKTS WITH #12 OR #10 CU. SHALL BE RUN IN 3/4"C.

CIRCUIT DESCRIPTION	CONDUIT SIZE	COND. SIZE (AWG)	NEUT SIZE (AWG)	E.G.C SIZE (AWG)	TYPE LOAD	LOAD VA	CKT BKR	CKT #	CKT #	CKT BKR	LOAD VA	TYPE LOAD	CONDUIT SIZE	COND. SIZE (AWG)	NEUT SIZE (AWG)	E.G.C SIZE (AWG)	CIRCUIT DESCRIPTION
CU-1	**3/4"**	**#10**		**#10**	**3**	**1082**	**20/2**	1	2	**30/2**	1850	4		#10			UNIT HEATER- SPRKLR ROOM
--		**#10**				**1082**		3	4		1850	4		#10			--
RCPTS - TEEN 108	**3/4"**	**#10**	**#10**	**#10**	**1**	**720**	20/1	5	6	**20/2**	**1498**	**3**	**3/4"**	**#10**	**#10**	**#10**	**CU-2**
RCPTS - CHILDREN 110	**3/4"**	**#10**	**#10**	**#10**	**1**	**720**	20/1	7	8		**1498**	**3**		**#10**			**--**
RCPTS - CHILDREN 110	**3/4"**	**#10**	**#10**	**#10**	**1**	**540**	20/1	9	10	20/1							
							20/1	11	12	20/1							
EXISTING CIRCUIT					*1*	*1380*	20/1	13	14	20/1							
							20/1	15	16	20/1							
							20/1	17	18	20/1							
							20/1	19	20	20/1							
							20/1	21	22	20/1							
							20/1	23	24	20/1							
							20/1	25	26	20/1							
							20/1	27	28	20/1							
EXISTING CIRCUIT					*1*	*4785*	50/2	29	30	20/1							
					1	*4785*		31	32	20/1							
							20/1	33	34	20/1							
							20/1	35	36	20/1							
							20/1	37	38	20/1							
							20/1	39	40	20/1							
							20/1	41	42	20/1							

CONNECTED LOADS SUMMARY	VA/PH	AMPS/PH
PHASE 'A'	11315	94
PHASE 'B'	3472	29
PHASE 'C'	7003	58
TOTALS	21790	60

PANELBOARD LOAD ANALYSIS	KVA	AMPS
1. TOTAL NEC DEMAND LOAD	19.24	53.4
2. ADD LARGEST MOTOR (25%)	0.00	0.0
3. ADD LIGHTINEG PER VA/SF (SEE NOTE 2	0.00	0.0
4. SUB-TOTAL LOAD	19.24	53.4
5. NOT USED.		
6. TOTAL NEC LOAD WITH FUTURE LOAD	19.24	53.4

LOAD ANALYSIS NOTES AND PANELBOARD TYPICAL NOTES:

1. REFER TO THE TYPICAL LOAD ANALYSIS NOTES ON THIS DRAWING SHEET.
2. REFER TO THE TYPICAL PANELBOARD KEYED NOTES ON THIS DRAWING SHEET.

PANELBOARD LOAD COMPUTATIONS - LOAD SUMMARY

TYPE	LOAD DESCRIPTION	SUB FEED	KVA	D.F.	DEMAND LOAD (KVA)
1	1. RECEPTACLES	0.00	12.93	NOTE 1	11.5
2	2. LIGHTING	0.00	0.00	125%	0.0
3	3. AIR CONDITIONING	0.00	4.08	100%	4.1
4	4. ELECTRIC HEATING	0.00	3.70	100%	3.7
5	5. MOTORS	0.00	0.00	100%	0.0
6	6. ELECT WATER HTG.	0.00	0.00	100%	0.0
7	7. ELEVATOR	0.00	0.00	100%	0.0
8	8. KITCHEN EQUIP.	0.00	0.00	65%	0.0
9	9. MISCELANEOUS	0.00	0.00	100%	0.0
10	10.EXT. LIGHTING	0.00	0.00	125%	0.0
	TOTAL KVA	0.00	20.71		19.24
	TOTAL AMPERES	0.0	57.5		53.4

REFERENCE SHEET E3.1

THE SEAL APPEARING ON THIS DOCUMENT WAS AUTHORIZED BY

ROGER G. MENDEZ, P.E. 93809

ON 05/29, 2014

STATE OF TEXAS
ROGER G. MENDEZ
93809
REGISTERED PROFESSIONAL ENGINEER

1 ADDENDUM 2 05.29.14

RGM ENGINEERING

CITY OF SAN ANTONIO
D9 LIBRARY REMODEL/ADDITION

Addendum - 2
ATTACHMENT - SE3.1-2

2515 E. EVANS ROAD,SAN ANTONIO, TEXAS 78258

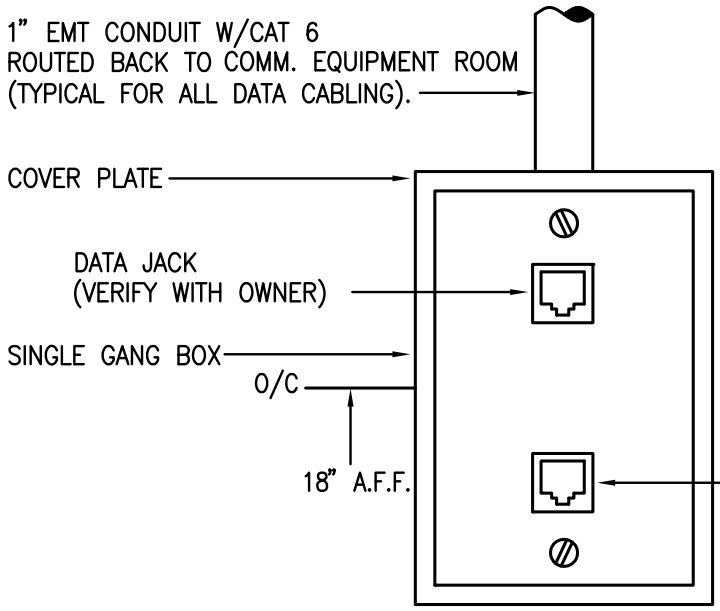

TYPICAL COMM. OUTLET DETAIL

2

NOT TO SCALE

1

REFERENCE SHEET E4.1

THE SEAL APPEARING ON THIS DOCUMENT WAS AUTHORIZED BY

ROGER G. MENDEZ, P.E. 93809

ON 05/29, 2014

STATE OF TEXAS
ROGER G. MENDEZ
93809
REGISTERED PROFESSIONAL ENGINEER

1 ADDENDUM 2 05.29.14

RGM ENGINEERING

CITY OF SAN ANTONIO
D9 LIBRARY REMODEL/ADDITION

Addendum - 2
ATTACHMENT - SE4.1–1

2515 E. EVANS ROAD,SAN ANTONIO, TEXAS 78258

TELECOM SYMBOL LEGEND

VOICE & DATA SYMBOLS

W	WALL PHONE OUTLET, CABLE TYPE AS SPECIFIED, MOUNTED +48" A.F.F. UNLESS NOTED OTHERWISE. ONE (1) CABLE RUN PER LOCATION.
WAP	WIRELESS ACCESS POINT (WAP), CEILING OUTLET, CABLE TYPE AS SPECIFIED. TWO (2) DATA CABLES RUNS PER LOCATION UNLESS OTHERWISE NOTED.
XD Y AFF	DATA OUTLET, CABLE TYPE AS SPECIFIED, Y INDICATES MOUNTING HEIGHT. X-NUMBER OF CABLE RUNS PER LOCATION.
XD	DATA OUTLET, CABLE TYPE AS SPECIFIED, MOUNTED +18" A.F.F. UNLESS NOTED OTHERWISE. X-NUMBER OF CABLE RUNS PER LOCATION.
CAM X AFF	IP SECURITY CAMERA OUTLET (CAM), WALL OUTLET. X INDICATES MOUNTING HEIGHT. TYPICALLY, TWO (2) DATA CABLE RUNS PER LOCATION.
CAM	SECURITY CAMERA (CAM), CEILING OUTLET, CABLE TYPE AS SPECIFIED. TWO (2) DATA CABLE RUNS PER LOCATION UNLESS OTHERWISE NOTED.
XD	DATA OUTLET, CABLE TYPE AS SPECIFIED, MOUNTED IN A FLOOR BOX. X-NUMBER OF CABLE RUNS PER LOCATION.

GENERAL NOTES

1. THE GENERAL CONDITIONS, SUPPLEMENTARY GENERAL CONDITIONS AND OTHER REQUIREMENTS OF DIVISION 1. THE ELECTRICAL, AUDIO VISUAL, AND SECURITY PLANS AND SPECIFICATIONS, MAY APPLY TO THE WORK SPECIFIED.
2. COMMUNICATION CABLING INTEGRATOR HERE AFTER REFERRED TO, AS "CONTRACTOR" SHALL PROVIDE ALL MATERIALS, COMPONENTS, TOOLS, AND LABOR TO COMPLETE A TELECOMMUNICATIONS INFRASTRUCTURE AS SET FORTH IN THE STRUCTURED CABLING SYSTEM DOCUMENTS, CONTRACTS AND DRAWINGS. REF. DIVISION 27, T DRAWINGS AND E DRAWINGS.
3. THE CONTRACTOR SHALL CAREFULLY EXAMINE THE SITE TO DETERMINE THE EXTENT OF WORK AND CONDITION UNDER WHICH IT WILL BE DONE. REVIEW AND VERIFY CONTRACT DOCUMENTS IN RELATION TO FIELD CONDITIONS TO VERIFY ACCURACY, CONFIRMING WITH OWNER, OR THEIR DESIGNATED REPRESENTATIVE, THAT THE WORK HAS BEEN COMPLETED PRIOR TO PROCEEDING WITH INSTALLATION. REGARDING ANY PROJECT RELATED QUESTIONS; THE CONTRACTOR IS RESPONSIBLE FOR OBTAINING CLARIFICATION FROM OWNER, OR THEIR DESIGNATED REPRESENTATIVE, PRIOR TO PROCEEDING WITH THE WORK OR RELATED WORK IN QUESTION.
4. DISCREPANCIES BETWEEN THESE PLANS AND ACTUAL FIELD CONDITIONS MUST BE BROUGHT TO THE IMMEDIATE ATTENTION OF OWNER, OR THEIR DESIGNATED REPRESENTATIVE, FOR CLARIFICATION.
5. REFER TO TECHNOLOGY, AUDIO VISUAL AND SECURITY CONTRACT DOCUMENTS, DRAWINGS AND SPECIFICATIONS AS A UNIT AND IN WHOLE IN THE BIDDING AND INSTALLATION OF THIS PROJECT.
6. ELECTRICAL CONTRACTOR SHALL READ IN THEIR ENTIRETY ALL SECTIONS OF THE COMMUNICATIONS CABLING SYSTEM DOCUMENTS AND APPLY THEM AS APPROPRIATE FOR WORK IN THIS SECTION. REF DIVISION 27 AND T DRAWINGS.
7. ELECTRICAL CONTRACTOR SHALL PROVIDE MATERIALS, COMPONENTS, TOOLS, AND LABOR TO COMPLETE COMMUNICATIONS CABLING PATHWAY, ELECTRICAL POWER DISTRIBUTION AND GROUNDING SYSTEM AS SET FORTH IN THE COMMUNICATIONS CABLING SYSTEM DOCUMENTS AND THE ELECTRICAL DOCUMENTS, SPECIFICATIONS AND DRAWINGS.
8. CONTRACTOR SHALL NOTE AND REPORT TO GC COMMUNICATION SYSTEM WORK PERFORMED OR NOT PERFORMED BY ELECTRICAL CONTRACTOR WHICH DOES NOT COMPLY WITH COMMUNICATIONS SPECIFICATIONS AND DRAWINGS AND ARE INTENDED FOR THE COMMUNICATION SYSTEMS COMPONENTS.
9. CONTRACTOR SHALL TAKE NECESSARY MEANS TO ASSURE COMMUNICATION SYSTEM COMPONENTS ARE PROTECTED FROM MECHANICAL DAMAGE BEFORE, DURING AND AFTER CONSTRUCTION.
10. CONTRACTOR IS REQUIRED TO REFERENCE DIVISION 27 SPECIFICATIONS FOR ITEMIZED PRICING REQUIREMENTS.
11. ALL COMPONENTS AND DEVICES SHOWN ON THESE DRAWINGS ARE FOR APPROXIMATE LOCATION AND POSITIONING ONLY. VERIFY EXACT LOCATIONS WITH THE OWNER OR G.C. PRIOR TO INSTALLATION.
12. CONTRACTOR SHALL ADHERE TO ALL TELECOMMUNICATIONS CABLING STANDARDS SET FOURTH IN THE CITY OF SAN ANTONIO STRUCTURED CABLING INFRASTRUCTURE GUIDELINES FOR FACILITY CONSTRUCTION OR RENOVATION VERSION 1.0.

ELECTRICAL

1. FOR SPECIFIC POWER AND RECEPTACLE REQUIREMENTS IN THE PROJECT REFERENCE ELECTRICAL SPECIFICATIONS AND DRAWINGS. REFERENCE COSA STRUCTURED CABLING GUIDELINES PAGE 41 FOR ELECTRICAL REQUIREMENTS.
2. PROVIDE A MINIMUM OF ONE (1) DUPLEX RECEPTACLE FOR EACH INFORMATION OUTLET (I/O) INSTALLED THAT IS NOT LOCATED WITHIN 1' OF A DUPLEX ELECTRICAL OUTLET.
3. PROVIDE DEDICATED RECEPTACLE CIRCUITS LOCATED ON OR NEAR EACH EQUIPMENT RACK LOCATED IN THE COMMUNICATIONS ROOMS. SEE DRAWINGS FOR APPROXIMATE LOCATIONS. REFERENCE COSA STRUCTURED CABLING GUIDELINES PAGE 41 FOR ELECTRICAL REQUIREMENTS.
4. ELECTRICAL CONTRACTOR SHALL INSTALL NORMAL AND GENERATOR BACK-UP POWER AS REQUIRED.

TELECOM NOTES

COMMUNICATIONS PATHWAYS

1. INSTALL CABLE TRAY WITH MINIMAL 12" CLEARANCE ABOVE AND ON ONE SIDE OF TRAY. TRAY SHALL HAVE A MINIMAL 3" CLEARANCE BELOW WHEN PLACED ABOVE LIGHT FIXTURES OR ABOVE ACCESSIBLE CEILING SPACE.
2. CONTRACTOR SHALL VERIFY CABLE TRAY PATHWAY ROUTING PRIOR TO INSTALLATION OF HORIZONTAL CABLES TO INSURE CABLE PATHWAY DOES NOT CAUSE CABLE LENGTHS TO EXCEED MAXIMUM DISTANCE.

   OUTLET FACEPLATES MUST BE LABELED WITH THE JACK NUMBERS OR PATCH PANEL PORTS PER ANSI/TIA-607B STANDARDS & COSA STANDARDS.
3. BACK BOXES INSTALLED FOR COMMUNICATIONS DATA AND VOICE WIRING TERMINATION SHALL BE A MINIMUM OF 4" X 4" X 2.5" DEEP DOUBLE-GANG OUTLET BOX TO ALLOW FOR THE REQUIRED WORKING CLEARANCE OF THE CAT6 UTP CABLE. THESE BOXES SHALL BE SEPARATE FROM ELECTRICAL JUNCTION BOXES AND BE EXCLUSIVELY FOR DATA AND VOICE COMMUNICATIONS.
4. CONDUITS TO COMMUNICATIONS WALL BOXES SHALL BE MINIMUM OF ONE IN. (1") IN DIAMETER AND SHALL BE COMPLETE WITH NYLON PULL STRING.
5. CONTRACTOR SHALL PROVIDE CONDUIT SERVICING END USER OUTLET AND STUB UP TO ABOVE CEILING, THEN ROUTE TO THE NEAREST CORRIDOR/HALLWAY TELECOMMUNICATIONS HORIZONTAL PATHWAY LEADING TO THE TELECOMMUNICATIONS ROOM. CONTRACTOR SHALL COORDINATE WITH GENERAL CONTRACTOR ON CABLE PATHS PRIOR TO INSTALLATION OF CABLING.
6. THE NUMBER OF HORIZONTAL CABLES PLACED IN A CABLE SUPPORT OR PATHWAY SHALL BE LIMITED TO A NUMBER OF CABLES THAT WILL NOT CAUSE A GEOMETRIC SHAPE OF THE CABLES TO BE ALTERED. UNDER NO CIRCUMSTANCES SHOULD CABLES IN THE HORIZONTAL PATHWAY BE BUNDLED. THIS IS TO MINIMIZE "ALIEN" CROSS TALK.
7. SUPPLY SOLUTIONS AND SHOP DRAWINGS SUBMITTALS FOR CONDUIT SEALING MATERIALS AND SYSTEMS FOR WRITTEN APPROVAL OF MATERIAL/SYSTEMS PRIOR TO PURCHASE AND INSTALLATION. MATERIALS AND SYSTEMS SHALL BE COMPLETE UPON INSTALLATION.
8. PRIOR TO SUBSTANTIAL COMPLETION, ALL TELECOM PATHWAY CONDUITS AND UNUSED "TELECOM INTENDED USE CONDUITS" SHALL BE PROPERLY FIRE STOPPED.
9. CONDUIT RUNS SHALL BE INSTALLED WITH NO MORE THAN TWO (2) 90 DEG. BENDS AND NOT EXCEED 100 FEET. IF THESE CONDITIONS CAN NOT BE MET, A J-BOX MUST BE PLACED IN THE RUN, WITH THE ABILITY TO ACCESS BOX THROUGH THE CEILING.
10. CONDUITS SHALL HAVE CONNECTORS, PROTECTIVE BUSHINGS, AND PULL STRINGS AND SHALL BE GROUNDED.
11. ELECTRICAL CONTRACTOR SHALL COORDINATE WITH ARCHITECT AND TELECOMMUNICATIONS CONSULTANT ON ENTRY, PATHWAYS AND OUTLET BOX PLACEMENT IN MODULAR FURNITURE AND CUSTOM MILLWORK.

GROUNDING AND BONDING

1. ALL METAL RACKS, FRAMES, CABINETS AND MISCELLANEOUS EQUIPMENT ENCLOSURES SHALL BE BONDED TOGETHER USING GREEN INSULATED COPPER WIRE SO THAT ALL EQUIPMENT, STRUCTURED CABLING RACKS ARE AT THE SAME GROUND POTENTIAL. A VOLT-O-METER (VOM) MEASUREMENT BETWEEN ANY TWO POINTS ON METAL RACKS AND EQUIPMENT ENCLOSURES IN THE TELECOMMUNICATIONS ROOMS SHALL BE LESS THAN 1.25 VOLTS DC OR AC POTENTIAL.
2. ALL GROUNDS USED SHALL BE BONDED TOGETHER TO FORM A SINGLE GROUNDING ELECTRODE SYSTEM AS REQUIRED IN ARTICLE 250 OF NFPA 70 - NATIONAL ELECTRICAL CODE.
3. SURFACES SHALL BE PREPARED TO PROVIDE A PROPER PATH TO GROUND. ANY SURFACE TO BE GROUNDED MUST BE FREE OF PAINT OR OTHER COATING THAT MIGHT PREVENT AN EFFECTIVE GROUND. PAINT SHOULD BE SCRAPED AWAY UNTIL METALLIC SURFACE HAS BEEN EXPOSED BEFORE THE ATTACHMENT OF GROUNDING OR BONDING WIRE.
4. CONTRACTOR TO INSTALL MANUFACTURER PROVIDED STAR WASHERS PER PANEL INSTALLED IN ORDER FOR PANELS TO BE BONDED TO RACK. ONLY ONE (1) STAR WASHER IS REQUIRED PER PANEL.
5. NO GROUND WIRE SHALL BE RUN IN CABLE RUNWAY WITH HORIZONTAL CABLING OR ATTACHED TO THE OUTSIDE OF THE RACEWAY. "L" BRACKETS ARE REQUIRED.
6. CONTRACTOR TO VERIFY EXISTING GROUNDING SYSTEM IN TELECOM ROOMS AND ADHERE TO ALL GROUNDING AND BONDING REQUIREMENTS SET FOURTH IN THE ANSI-J-STD-607-A COMMERCIAL GROUNDING AND BONDING STANDARDS.
7. ALL OSP COPPER CABLING SHALL TERMINATE ON PROTECTION BLOCKS WITH SOLID STATE MODULES. VOICE CABLING SHALL BE CROSS-CONNECTED TO WALL MOUNTED 66 BLOCKS.
8. CONTRACTOR TO BOND ALL INTERLOCKING ARMORED FIBER OPTIC CABLE TO EQUIPMENT RACK. REFER TO ARMORED FIBER TERMINATION BONDING DETAIL.

PROJECT NOTES

COMMUNICATIONS CABLE

1. CONTRACTOR SHALL TERMINATE ALL CATEGORY 6 8P8C JACK INSERTS TO 568-B WIRING SCHEME.
2. CONTRACTOR SHALL PROVIDE AND INSTALL HORIZONTAL COPPER DATA CABLES.
3. HORIZONTAL DATA CABLING SHALL CONSIST 24 AWG PLENUM CAT6 4PR UTP CABLES TO EACH DATA OUTLET.
4. WIRELESS OUTLET LOCATIONS SHALL CONSIST OF ONE 24 AWG PLENUM CAT6 4PR UTP CABLE TO EACH ASSESS POINT. PROVIDE 20' CABLE SLACK AT DEVICE END.
5. NO HORIZONTAL CABLE SHALL BE LONGER THAN 295 FEET. IF THE CONTRACTOR BELIEVES ANY STATION CABLE WILL EXCEED THE 295 FEET LIMIT WRITTEN APPROVAL FROM THE OWNER'S ARCHITECT/ENGINEER WILL BE REQUIRED PRIOR TO INSTALLATION.
6. PROVIDE CATEGORY 6 CABLING FROM EACH WORKSTATION OUTLET LOCATION TO THE MDF.
7. COMMUNICATIONS CABLE SHALL NOT BE PAINTED.
8. PROVIDE ALL NECESSARY MEANS TO PROTECT ALL DATA /VOICE/FIBER CABLING AND JACKS/PORTS FROM MECHANICAL DAMAGE AND DUST DURING CONSTRUCTION.

COMMUNICATION ROOMS

1. PRIOR TO THE COMMENCEMENT OF ANY BUILD-OUT OF THE TELECOMMUNICATION ROOMS THE CONTRACTOR SHALL SCHEDULE A MEETING WITH THE TELECOMMUNICATIONS DEPARTMENT TO VERIFY EXACT EQUIPMENT PLACEMENT AND CABLE ROUTING DETAILS.
2. TELECOM ROOM LAYOUTS AND EQUIPMENT ARE SHOWN FOR COORDINATION AND INFORMATIONAL PURPOSES ONLY.
3. GRAPHIC REPRESENTATION OF PATCH PANELS AND TERMINAL BLOCKS DO NOT REPRESENT EXACT QUANTITIES. CONTRACTOR SHALL PROVIDE SUFFICIENT QUANTITIES FOR ALL CABLING, PLUS 20%.
4. FURNISH AND INSTALL VELCRO CABLE SUPPORT, CABLE MANAGEMENT AND ASSOCIATED HARDWARE WITHIN TELECOMMUNICATIONS ROOMS.
5. CONTRACTOR TO PROVIDE AUTOCAD FLOOR PLAN AS-BUILT ON "D" SIZE PAPER, LAMINATED WITH PLASTIC AND MOUNTED BEHIND CUT PLEXI-GLASS ON THE WALL IN EACH TELECOM ROOM. REFERENCE TELECOM ROOM ELEVATIONS FOR AS-BUILT PLACEMENT.

CONTRACTOR QUALIFICATIONS

1. CONTRACTOR AND STAFF SHALL BE A CURRENT AUTHORIZED PANDUIT CERTIFIED INSTALLERS AND CERTIFIED BY PANDUIT TO PROVIDE AND FURNISH A 20-YEAR PERFORMANCE WARRANTY FOR STRUCTURED CABLING AND CONNECTIVITY COMPONENTS.
2. CONTRACTOR AND STAFF SHALL POSSESS RELEVANT PAST-EXPERIENCE AND REFERENCES FOR A MINIMUM OF (5) PROJECTS OF SIMILAR SIZE AND SCOPE TO THAT OF THE CITY OF SAN ANTONIO.
3. CONTRACTOR'S PROJECT MANAGER SHALL BE A RCDD IN GOOD STANDING AND SHALL PROVIDE CERTIFICATE.
4. CONTRACTOR SHALL HAVE A LOCAL OFFICE WITHIN A 75-MILE RADIUS OF THE PROJECT SITE
5. SUB-CONTRACTORS TO THE PRIMARY STRUCTURED CABLING CONTRACTOR SHALL MEET THE SAME REQUIREMENTS FOR THE PRIMARY STRUCTURED CABLING CONTRACTOR AS IDENTIFIED ABOVE.

WARRANTY ON PARTS AND LABOR

1. THE CONTRACTOR SHALL FURNISH A 20-YEAR PERFORMANCE WARRANTY FROM PANDUIT FOR THE STRUCTURED CABLING AND CONNECTIVITY COMPONENTS.
2. ALL LABOR AND WORKMANSHIP SHALL CARRY A MINIMUM WARRANTY PERIOD OF (1) YEAR FROM THE DATE OF FINAL SYSTEM ACCEPTANCE.
3. DEFECTS IN MATERIAL OR WORKMANSHIP APPEARING WITHIN THIS PERIOD OF TIME, SHALL BE PROMPTLY REPAIRED WITHOUT COST TO THE CITY OF SAN ANTONIO.

ABBREVIATIONS

AFF	ABOVE FINISHED FLOOR
AV	AUDIO VISUAL
AWG	AMERICAN WIRE GAUGE
BDF	BUILDING DISTRIBUTION FRAME
CATV	COMMUNITY ANTENNA TELEVISION
DB	DECIBEL
DEMARC	DEMARCATION POINT
CON.	CONDUCTOR
EMT	ELECTRIC METALLIC TUBING
ER	EQUIPMENT ROOM
ELECT	ELECTRICAL CONTRACTOR
EXST	EXISTING
HH	HANDHOLE
IDF	INTERMEDIATE DISTRIBUTION FRAME
I/O	INFORMATION OUTLET
IRC	INTERMEDIATE RIGID CONDUIT
ISP	INSIDE CABLE PLANT
LAN	LOCAL AREA NETWORK
MDF	MAIN DISTRIBUTION FRAME
MH	MAINTENANCE HOLE
MM	MULTIMODE
OFOI	OWNER FURNISHED OWNER INSTALLED
OSP	OUTSIDE CABLE PLANT
OTDR	OPTICAL TIME DOMAIN REFLECTOMETER
PB	PULL BOX
PBX	PRIVATE BRANCH EXCHANGE
PR	PAIR
PVC	POLYVINYL CHLORIDE
RMC	RIGID METAL CONDUIT
RF	RADIO FREQUENCY
STD	STRANDED
SM	SINGLEMODE
SP	SERVICE PROVIDER
STP	SHIELDED TWISTED PAIR
TB	TERMINAL BLOCK
TBB	TELECOMMUNICATIONS BONDING BACKBONE
TBC	TELECOMMUNICATIONS BONDING CONDUCTOR
TGB	TELECOMMUNICATIONS GROUND BUS BAR
TMGB	TELECOMMUNICATIONS MAIN GROUNDING BUS BAR
TR	TELECOM ROOM
TS	TRADE SIZE
UPS	UNINTERRUPTIBLE POWER SUPPLY
UTP	UNSHIELDED TWISTED PAIR
WAP	WIRELESS ACCESS POINT
WP	WATER PROOF

INDEX OF DRAWINGS

T000	TELECOM LEGEND, NOTES AND INDEX
T100	TELECOM FLOOR PLAN LEVEL 1
T400	TELECOM ENLARGE PLAN
T500	TELECOM DETAILS

CITY OF SAN ANTONIO
DISTRICT 9 LIBRARY
REMODEL / ADDITION

2515 E. EVANS ROAD
SAN ANTONIO, TEXAS 78258

4b technology
12600 Northborough - Suite 290
Houston, TX 77067 - 832-249-9379

DRAWING COORDINATION

ARCHITECTURAL, CIVIL, STRUCTURAL, MECHANICAL, ELECTRICAL AND LANDSCAPE DRAWINGS ARE INTERRELATED. GENERAL CONTRACTOR AND ALL SUB–CONTRACTORS SHALL REVIEW AND COORDINATE THE ENTIRE SET OF DRAWINGS AND PROJECT MANUAL.

13.24.000

JUNE 2014 ADDENDUM NO. 2

REGISTERED COMMUNICATIONS DISTRIBUTION DESIGNER
Bicsi
GEOFFREY D. BASFORD
REG. NO. 152593R
EXPIRES 12-31-15
RCDD

TELECOM LEGEND, NOTES, AND INDEX

T000

ALVIDREZ Architecture Inc.
MEMBER AMERICAN INSTITUTE OF ARCHITECTS
110 BROADWAY • SAN ANTONIO, TEXAS • 78205 • T: 210.299.8100 • F: 210.299.8102

PLAN NOTES:

1. PROVIDE 24 STRAND SINGLE MODE PLENUM ARMORED FIBER AND 25 PAIR PLENUM COPPER TIE CABLES FROM THE ENTRANCE FACILITY WALL FIELD TO THE MDF EQUIPMENT RACKS. TERMINATE COPPER ON A 24 PORT PATCH PANEL INSTALLED WITH PANDUIT COUPLER MODULES.

2. PROVIDE INDOOR/OUTDOOR RATED CABLING FOR ALL EXTERNAL CAMERAS AND WIRELESS ACCESS POINTS.

LEGEND:

- WALL MOUNTED DATA OUTLET. TYPICAL MOUNTING HEIGHT IS 18" AFF UNLESS NOTED
- CR SECURITY CARD READER
- CEILING MOUNTED DATA OUTLET
- FLOOR DATA OUTLET
- SECURITY CAMERA. REQUIRES ONE DATA DROP
- WAP CEILING MOUNTED WIRELESS ACCESS POINT REQUIRING 1 DATA PORT. REFERENCE T501 FOR DETAILS.

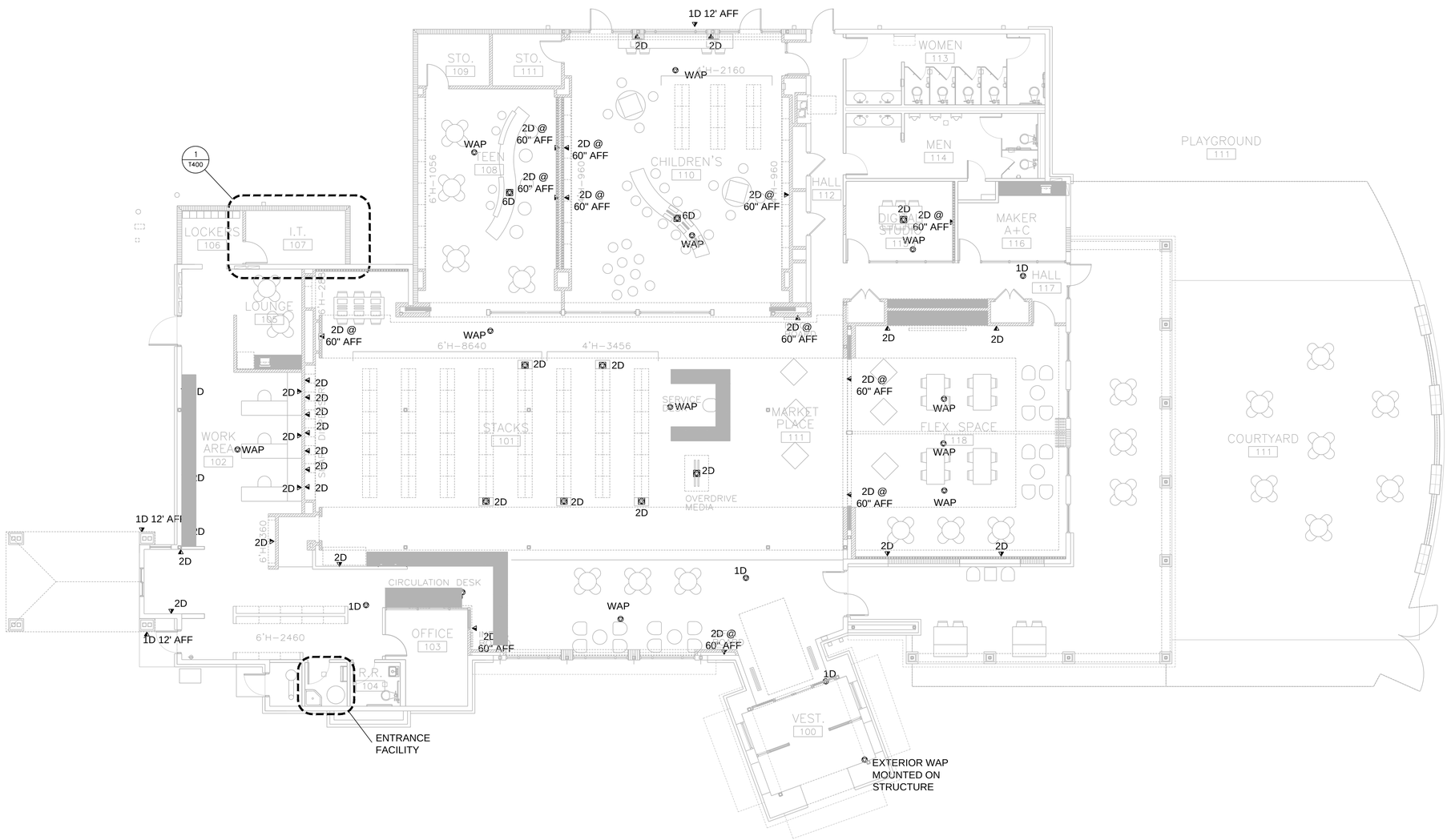

CITY OF SAN ANTONIO

DISTRICT 9 LIBRARY REMODEL / ADDITION

2515 E. EVANS ROAD
SAN ANTONIO, TEXAS 78258

12600 Northborough - Suite 290
Houston, TX 77067 - 832-249-9379

DRAWING COORDINATION

ARCHITECTURAL, CIVIL, STRUCTURAL, MECHANICAL, ELECTRICAL AND LANDSCAPE DRAWINGS ARE INTERRELATED. GENERAL CONTRACTOR AND ALL SUB-CONTRACTORS SHALL REVIEW AND COORDINATE THE ENTIRE SET OF DRAWINGS AND PROJECT MANUAL.

13.24.000

JUNE 2014 ADDENDUM NO. 2

REGISTERED COMMUNICATIONS DISTRIBUTION DESIGNER
Bicsi
GEOFFREY D. BASFORD
REG. NO. 152593R
EXPIRES 12-31-15

TECHNOLOGY FLOOR PLAN

ALVIDREZ Architecture Inc.

T100

MEMBER AMERICAN INSTITUTE OF ARCHITECTS
110 BROADWAY • SAN ANTONIO, TEXAS • 78205 • T: 210.299.8100 • F: 210.299.8102

ELECTRICAL COORDINATION NOTES:

1) THE MDF SHALL BE EQUIPPED WITH A MINIMUM OF (2) DEDICATED 208 VAC 20 AMP ELECTRICAL CIRCUITS TERMINATED IN SEPARATE JBOXES AND (1) DEDICATED 120 VAC 20 AMP CIRCUIT MOUNTED ABOVE EACH EQUIPMENT CABINET OR RACK.
   - A) THE (2) 208 VAC J-BOXES SHALL BE MOUNTED TO A UNI-STRUT ABOVE THE EQUIPMENT CABINETS OR RACKS AND SHALL BE PROVIDED WITH A 7-FOOT "SO TYPE" CORD WITH A FEMALE NEMA L6-20R RECEPTACLE ON THE END.
   - B) THE (1) 120 VAC J-BOX SHALL BE MOUNTED TO A UNI-STRUT ABOVE THE EQUIPMENT CABINETS OR RACKS AND SHALL BE PROVIDED WITH A 7-FOOT "SO TYPE" CORD WITH A FEMALE NEMA 5-20R RECEPTACLE ON THE END.
   - C) THE ORIGINATING ELECTRICAL PANEL SHALL BE PROPERLY SIZED FOR THE LOADS CALCULATED AND SHALL BE LOCATED IN THE NEAREST ELECTRICAL ROOM.
2) ADDITIONAL POWER CIRCUITS TO BE ALLOCATED TO SECURITY, PAGING CATV, AND SERVICE PROVIDER EQUIPMENT SHALL BE CONSIDERED AND COORDINATED AT THE TIME OF BUILDING DESIGN.
3) POWER DISTRIBUTION TO THE CABINETS SHALL BE ACHIEVED BY INSTALLING RACK MOUNTED PDUS.

GENERAL NOTE:

1. NO PLUMBING, HVAC OR ELECTRICAL CONDUIT SHALL PASS THROUGH OR ABOVE THE IDF, EXCEPT FOR SPRINKLER SYSTEMS.
2. ALL WALLS SHALL BE COVERED WITH 4-FEET X 8-FEET X ¾-INCH AC GRADE VOID FREE FIRE RETARDANT PLYWOOD, ALIGNED VERTICALLY STARTING AT 12 INCHES ABOVE THE FINISHED FLOOR. THE PLYWOOD SHALL BE INSTALLED WITH THE "A" GRADE SIDE EXPOSED AND THE "C" GRADE SIDE AGAINST THE BUILDING OR STRUCTURE. THE PLYWOOD SHALL BE PAINTED WITH TWO COATS OF FIRE RETARDANT PAINT AND ONE STAMP FROM EACH SHEET SHALL BE MASKED DURING THE PAINTING AND UNCOVERED AFTER THE PAINT HAS DRIED SO THE FIRE RATED PLYWOOD STAMPS ARE VISIBLE FOR INSPECTION.
3. LIGHTING:
   - A. FLORESCENT LIGHT FIXTURES SHALL BE AT LEAST 24 INCHES ABOVE THE TOP OF THE HIGHEST CABINET, RACK OR CABLE RUNWAY (APPROXIMATELY 84 INCHES), 36 INCHES IS RECOMMENDED.
   - B. LIGHTING SHALL BE A MINIMUM OF 50 FOOT CANDLES AT 2 FEET ABOVE THE FLOOR IN THE ENTIRE SPACE.
   - C. THE MDF SHALL BE EQUIPPED WITH EMERGENCY LIGHTING TO KEEP THE SPACE LIT DURING POWER OUTAGES.
4. MAINTAIN A ROOM TEMPERATURE OF 68 TO 70 DEGREES WITH 30-55 PERCENT HUMIDITY CONTROL.

KEYED NOTES

1. 12" LADDER RACK
2. NOT USED
3. NOT USED
4. 12" LADDER TRAY TRIANGULAR BRACKET
5. 19" EQUIPMENT RACK
6. TELECOMMUNICATIONS MAIN GROUND BUS BAR (TMGB)
7. 12" VERTICAL LADDER TRAY
8. 3/4" FIRE RATED PLYWOOD
9. RADIUS DROP
10. 12" RUNWAY RADIUS OUTSIDE BEND
11. FOUR (4) 4" EZ-PATH WALL PENETRATION WITH FRAME
12. DUPLEX CONVENIENCE OUTLET ON BACK UP VIA BUILDING WIDE UPS, IF NOT AVAILABLE, ON EMERGENCY GENERATOR
13. WALL ANGLE BRACKET
14. 208 VOLT 20 AMP DEDICATED CIRCUIT WITH A NEMA L6-20R RECEPTACLE WITH 7' "SO TYPE" CORD.MOUNTED ON UNISTRUT AT THE TOP OF THE EQUIPMENT RACKS
15. 2RU HORIZONTAL WIRE MANAGER
16. 48 PORT PATCH PANEL
17. 6" VERTICAL WIRE MANAGER
18. 48 PORT SWITCH (OFOI)
19. NEMA 5-20R 120 VOLT 20 AMP WITH"SO TYPE" CORD MOUNTED ON UNISTRUT AT THE TOP OF THE EQUIPMENT RACKS.
20. CARD READER
21. NOT USED
22. SECURITY WALL FIELD
23. WALL ANGLE BRACKET

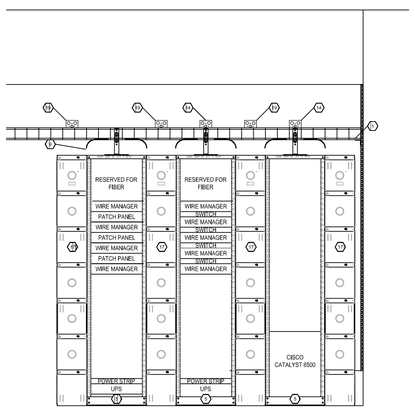

2 T400 MDF RACK ELEVATIONS
1/2" = 1'

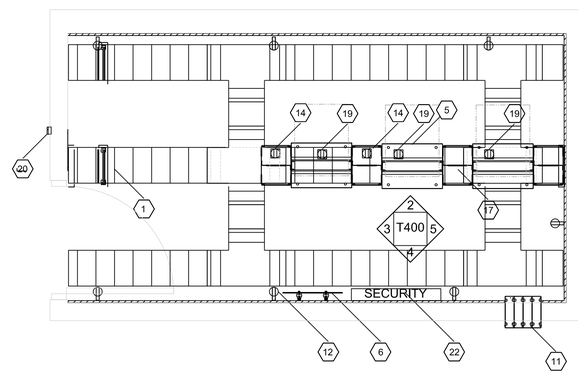

1 T400 ENLARGED MDF PLAN
1/2" = 1'

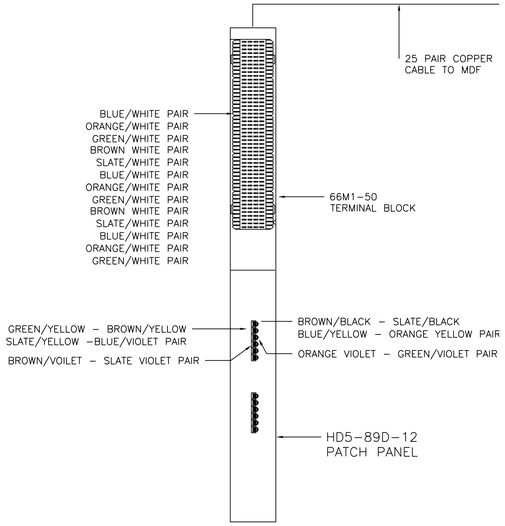

6 T400 ENTRANCE FACILITY WALL FIELD ELEVATION
1/2" = 1'

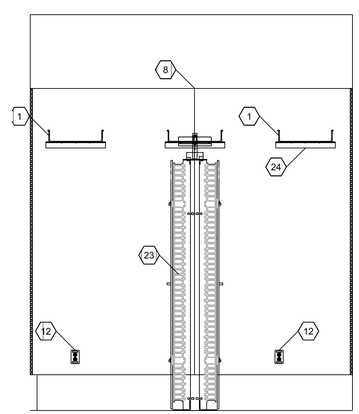

5 T400 MDF WALL ELEVATION
1/2" = 1'

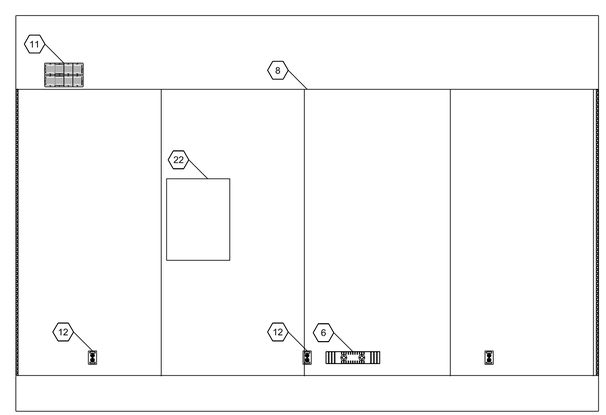

4 T400 MDF WALL ELEVATION
1/2" = 1'

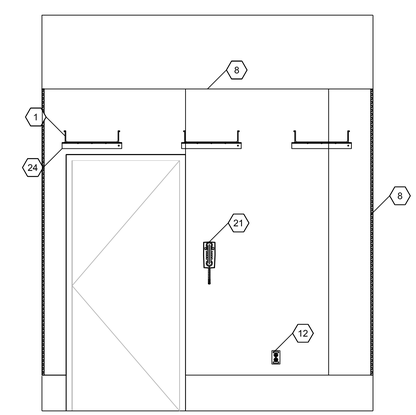

3 T400 MDF WALL ELEVATION
1/2" = 1'

CITY OF SAN ANTONIO

DISTRICT 9 LIBRARY
REMODEL / ADDITION

2515 E. EVANS ROAD
SAN ANTONIO, TEXAS 78258

technology
12600 Northborough - Suite 290
Houston, TX 77067 - 832-249-9379

DRAWING COORDINATION

ARCHITECTURAL, CIVIL, STRUCTURAL, MECHANICAL, ELECTRICAL AND LANDSCAPE DRAWINGS ARE INTERRELATED. GENERAL CONTRACTOR AND ALL SUB-CONTRACTORS SHALL REVIEW AND COORDINATE THE ENTIRE SET OF DRAWINGS AND PROJECT MANUAL.

13.24.000

JUNE 2014 — ADDENDUM NO. 2

REGISTERED COMMUNICATIONS DISTRIBUTION DESIGNER
Bicsi
GEOFFREY D. BASFORD
REG. NO. 152593R
EXPIRES 12-31-15
RCDD

MDF ENLARGED PLAN AND DETAILS

ALVIDREZ Architecture Inc.

T400

MEMBER AMERICAN INSTITUTE OF ARCHITECTS
110 BROADWAY • SAN ANTONIO, TEXAS • 78205 • T: 210.299.8100 • F: 210.299.8102

1. RECESSED DOUBLE GANG BOX (4 13/16"X4 13/16"X2 1/8") WITH DOUBLE GANG MUD RING. (BY DIV 26)
2. 1"ø CONDUIT WITH 200 LBS 1/4" POLYLINE PULL STRING. (BY DIV 26)
3. END OF CONDUIT DEBURRED AND FITTED WITH PROTECTIVE GROMMET. (BY DIV 26)
4. DOUBLE GANG WALL PLATE WITH DESIGNATION IN WINDOW.
5. PROVIDE RJ-45 JACK FOR EACH CABLE.
6. FILL UNUSED POSITIONS WITH BLANKS.
7. COORDINATE EXACT MOUNTING HEIGHT AND DISTANCE WITH ARCHITECT/GC.
8. ELECTRICAL RECEPTACLE SHOWN FOR REFERENCE ONLY.

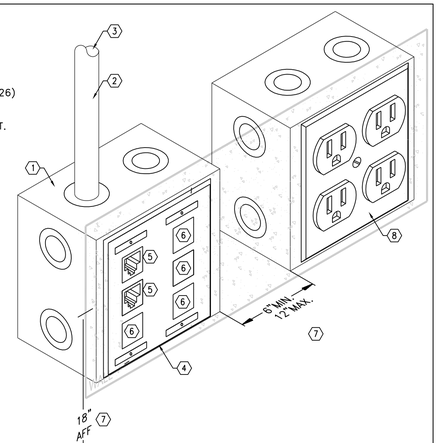

8 / T500 TYPICAL OUTLET ROUCH-IN DETAIL
SCALE: NTS

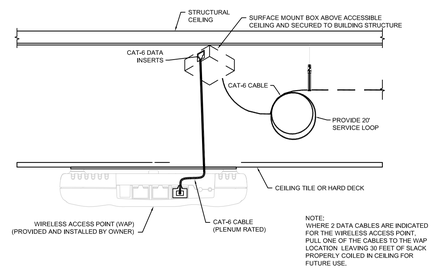

NOTE:
WHERE 2 DATA CABLES ARE INDICATED FOR THE WIRELESS ACCESS POINT, PULL ONE OF THE CABLES TO THE WAP LOCATION. LEAVING 30 FEET OF SLACK PROPERLY COILED IN CEILING FOR FUTURE USE.

7 / T500 WIRELESS ACCESS POINT
SCALE: NTS

EZ-Path Firestop Systems

System No. W-L-3218
F Ratings - 1, 2, 3 and 4 Hr
T Ratings - 3/4 and 1 Hr
L Rating At Ambient - 4 or 7 SCFM
L Rating at 400F - 2 or 3 SCFM

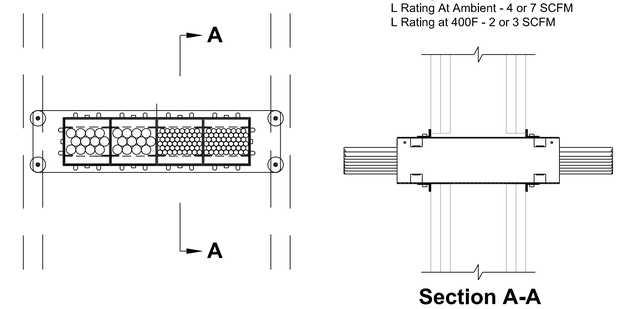

6 / T500 E-Z PATH FIRE STOP DETAIL
SCALE: NTS

KEY NOTES

1. CABLE
2. INSULATED BUSHING
3. SEALANT/PUTTY MIN. 5" RAD
4. SEALANT/PUTTY MIN. 1" DEPTH
5. MINERAL WOOL MIN. 1" DEPTH
6. GYPSUM PARTITION WALL
7. 4" STEEL SLEEVE
8. HILTI PENETRATION INFORMATION TAG

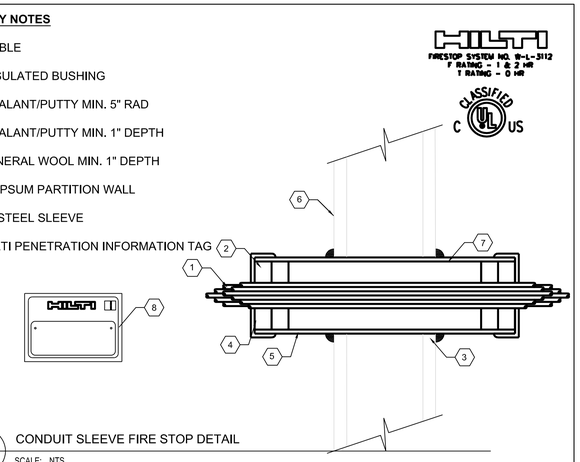

5 / T500 CONDUIT SLEEVE FIRE STOP DETAIL
SCALE: NTS

KEYED NOTES:

1. BONDING BACKBONE
2. GROUNDING TAG
3. BUSBAR
4. BUSBAR LABEL

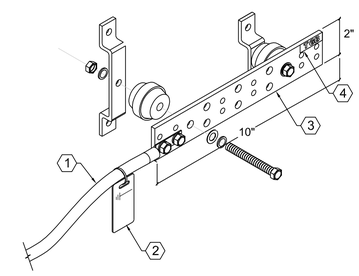

4 / T500 TELECOMMUNICATIONS GROUND BUSBAR DETAIL
SCALE: NTS

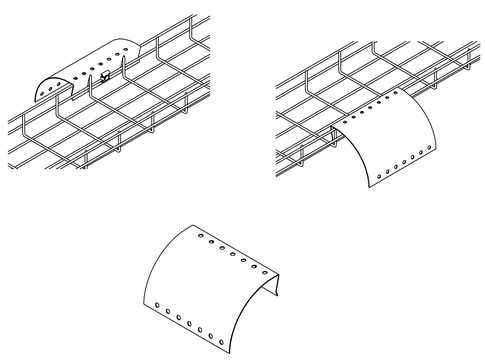

3 / T500 CABLE DROP OUT DETAIL
SCALE: NTS

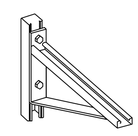

2 / T500 ANGLED MOUNTING BRACKET DETAIL
SCALE: NTS

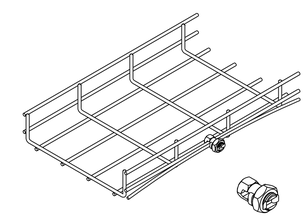

1 / T500 TYPICAL GROUND CLAMP DETAIL
SCALE: NTS

CITY OF SAN ANTONIO

DISTRICT 9 LIBRARY
REMODEL / ADDITION

2515 E. EVANS ROAD
SAN ANTONIO, TEXAS 78258

4b technology
12600 Northborough - Suite 290
Houston, TX 77067 - 832-249-9379

DRAWING COORDINATION

ARCHITECTURAL, CIVIL, STRUCTURAL, MECHANICAL, ELECTRICAL AND LANDSCAPE DRAWINGS ARE INTERRELATED. GENERAL CONTRACTOR AND ALL SUB-CONTRACTORS SHALL REVIEW AND COORDINATE THE ENTIRE SET OF DRAWINGS AND PROJECT MANUAL.

13.24.000

JUNE 2014 — ADDENDUM NO. 2

REGISTERED COMMUNICATIONS DISTRIBUTION DESIGNER
Bicsi
GEOFFREY D. BASFORD
REG. NO. 152593R
EXPIRES 12-31-15
RCDD

TELECOM DETAILS

ALVIDREZ Architecture Inc.

T501

MEMBER AMERICAN INSTITUTE OF ARCHITECTS
110 BROADWAY • SAN ANTONIO, TEXAS • 78205 • T: 210.299.8100 • F: 210.299.8102

City of San Antonio

Structured Cabling Infrastructure Guideline

For Facility Construction or Renovations

Version 1.0

TABLE OF CONTENTS

PART 1 - DOCUMENT PURPOSE 5

PART 2 - DOCUMENT HISTORY 5

PART 3 - INDUSTRY STANDARDS 6

PART 4 - CONTRACTOR QUALIFICATIONS 7

PART 5 - WARRANTY ON PARTS AND LABOR. 7

PART 6 - NOMENCLATURE 7

PART 7 - CITY INFRASTRUCTURE STANDARDS 7

7.01 Telecommunications Spaces 7

A. Main Distribution Frame (MDF) 8

1. Description 8

2. Architectural Requirements 8

3. HVAC Requirements 10

4. Lighting Requirements 10

5. Power Requirements 10

6. Equipment Cabinets / Racks and Cable Management Requirements 11

B. Intermediate Distribution Frame (IDF) 12

1. Description 12

2. Architectural Requirements 12

3. HVAC Requirements 14

4. Lighting Requirements 14

5. Power Requirements 15

6. Equipment Cabinets / Racks and Cable Management Requirements 16

7.02 Entrance Pathways and Conduits 16

A. Design Principles 16

B. Service Provider Conduits 17

C. Campus Serving Conduits 17

D. Building Entrance for Large Campus 18
7.03 Cable Management In Telecommunications Spaces 18
A. Equipment Cabinets / Equipment Racks 18
B. Overhead Cable Management 18
7.04 Cable Support in Pathways 19
A. Main Cable Pathway 19
B. Sleeves and Penetrations 19
C. Workstation Rough-ins and local power (Typ.) 20
7.05 Backbone Cabling 21
A. Service Provider Demarc 21
B. Inter-building Backbone Cabling (Campus) 22
1. Permanent Structures 22
a. Copper 22
b. Fiber 22
C. Intra-building Backbone Cabling 22
1. Copper 22
2. Fiber 23
7.06 Horizontal Cabling 23
A. Workstation Cable 23
B. Workstation Configurations 23
1. Office Workstation 23
2. Ceiling-Mounted Projector Outlet 24
3. Audio/Visual Control System (Control Panel) 24
4. Wireless Access Point Outlet 24
5. IP Camera Outlet 25
C. Patch Cables 25
7.07 Grounding 27
7.08 Labeling 27

7.09 Testing 29
7.10 As-Built Documentation 29
PART 8 - SUMMARY OF STANDARDS 29
8.01 Summary 29
PART 9 - EXHIBITS 30
EXHIBIT 1 - ACCEPTABLE MANUFACTURERS / PRODUCTS 31
EXHIBIT 2 – TYPICAL DETAILS 40

PART 1 - DOCUMENT PURPOSE

1.01 The City of San Antonio Structured Cabling Infrastructure Standard is a guideline for structured cabling infrastructure and the associated spaces to be applied by the design team for new or renovated facilities. Information herein is applicable to the Technology Consultant, Architect, MEP, and contractors, and shall be taken into account for each project by all team members.

A. The standards set forth parameters for the technical system in addition to the site and building requirements to facilitate a properly-installed standards-compliant structured cable system, organized as follows;

1. Telecommunications Spaces; Architectural, HVAC, Power, Entrance Pathways and Conduits

2. System Requirements; Cable Management in Telecommunications Spaces, Cable Support in Pathways, Backbone Cabling, Horizontal Cabling, Grounding, Labeling, Testing, and As-Built Documentation.

3. Telecommunications Diagrams

1.02 The standard addresses infrastructure for typical buildings and is not intended for the design of data centers or specialty facilities, of which should be considered on a case-by-case basis.

1.03 Designers shall not deviate from this standard without explicit written approval from the City of San Antonio Information Technology Services Department.

1.04 Any deviations shall immediately be brought to the attention of the owner's representative in writing for resolution.

1.05 Where specific product brands are mentioned, an equivalent will be considered following an official submission of product literature and written acceptance by the City of San Antonio Information Technology Services Department.

1.06 Where means, methods, and best practices are mentioned, contractor shall follow the manufacturers' and owner's requirements, industry standards, or code, whichever is most stringent.

1.07 Basic contractor qualifications are set forth, but may be made more stringent as applicable to each project based upon size and scope.

1.08 A Division 27 specification and T-Series drawings for the Structured Cabling System shall be commissioned and issued by the Architect during the design phases for each facility or project.

PART 2 - DOCUMENT HISTORY

2.01 This document supersedes all previous standards which have been fully reevaluated and described herein by the City of San Antonio Information Technology Services Department.

2.02 The contents of the standards were derived by the assembly and input from the City of San Antonio Information Technology Services Department.

PART 3 - INDUSTRY STANDARDS

3.01 The following industry standards shall be adhered to unless specifically directed otherwise by the City of San Antonio Information technology Services Department. The list is not all-inclusive and does not alleviate compliance with the latest applicable standards, codes, and best practices:

A. TIA-568-C.0 Generic Telecommunications Cabling for Customer Premises

B. TIA-568-C.1 Commercial Building Telecommunication Cabling Standards – Part 1 General Requirements (2008)

C. TIA-568-C.2 Balanced Twisted-Pair Telecommunications Cabling and Components Standard (2009)

D. TIA-568-C.3 Optical Fiber Cabling Components Standard (2009)

E. TIA-569-B Commercial Building Standard for Telecommunications Pathways and Spaces - (October 2004)

F. TIA-598-C Optical Fiber Cable Color Coding - (January 2005)

G. TIA/EIA-606-B Administration Standard for Commercial Telecommunications Infrastructure - (May 2012)

H. ANSI J-STD-607-B Commercial Building Grounding and Bonding Requirements for Telecommunications - (October 2011)

I. TIA-758-A Customer-Owned Outside Plant Telecommunications Infrastructure Standard - (August 2004)

J. TIA-526-7 Measurement of Optical Power Loss of Installed Single-Mode Fiber Cable Plant – OFSTP-7 - (February 2002)

K. TIA-526-14-A Optical Power Loss Measurements of Installed Multimode Fiber Cable Plant – OFSTP-14 - (August 1998)

L. AIA

M. Local Building Code

N. NEC

O. ISO

P. ANSI

Q. FCC

R. UL

S. OSHA

T. NFPA

U. NEMA

PART 4 - CONTRACTOR QUALIFICATIONS

4.01 Contractor and staff shall be a current authorized Panduit Certified Installers and certified by Panduit to provide and furnish a 20-year performance warranty for structured cabling and connectivity components.

4.02 Contractor and staff shall possess relevant past-experience and references for a minimum of (5) projects of similar size and scope to that of the City of San Antonio.

4.03 Contractor's Project Manager shall be a RCDD in good standing and shall provide Certificate.

4.04 Contractor shall have a local office within a 75-mile radius of the project site

4.05 Sub-contractors to the primary structured cabling contractor shall meet the same requirements for the primary structured cabling contractor as identified above.

PART 5 - WARRANTY ON PARTS AND LABOR.

5.01 The contractor shall furnish a 20-year performance warranty from Panduit for the structured cabling and connectivity components.

5.02 All labor and workmanship shall carry a minimum warranty period of (1) year from the date of final system acceptance.

5.03 Defects in material or workmanship appearing within this period of time, shall be promptly repaired without cost to the City of San Antonio.

PART 6 - NOMENCLATURE

6.01 Main Distribution Frame (MDF) – An environmentally controlled centralized architectural space for housing telecommunications equipment that usually serves as the demarcation point for service providers, and houses the backbone terminations for cross-connection and distribution to Intermediate Distribution Frames.

6.02 Intermediate Distribution Frames (IDF) – An environmentally controlled architectural space for housing telecommunications equipment and backbone terminations for cross-connection and distribution to the MDF and end-user workstations.

PART 7 - CITY INFRASTRUCTURE STANDARDS

7.01 Telecommunications Spaces

A. Main Distribution Frame (MDF)

1. Description

a. The MDF is a telecommunications space that serves a building or multi-building facility or campus. There is only (1) on each campus.

b. The MDF houses the entrance conduits, terminations, and cross connections for all incoming inter-building backbone cabling from the IDFs in other buildings on the campus and the intra-building backbone cabling from the IDFs in the building in which it resides, and cross-connects to user workstations.

c. Wall and floor space shall be reserved for service provider demarcation equipment and incoming infrastructure terminations.

d. Campus distribution network equipment, servers, and other centralized telecommunications related equipment will reside in the MDF.

e. The MDF may share space with other systems such as security panels, paging systems, and CATV cabling. Space allocation for other systems shall be coordinated with the applicable disciplines after approval from the City of San Antonio Information Technology Service Department. All coordination shall be completed prior to installation.

f. Fire alarm panels and building control panels shall not be located inside the MDF. Space allocation for these systems needs to occur outside of the MDF.

g. The MDF shall not be used for storage, serve as a mechanical or electrical distribution space, nor shall it have within its space main electrical feeds, electrical switch gear, transformers, and water or sprinkler main lines.

h. The layout of cabinets, equipment racks, wall fields, and cable management shall be as indicated on the attached diagrams.

2. Architectural Requirements

a. The MDF shall be a minimum of 150 square feet with minimum clear lineal walls of at least 10 feet by 15 feet. The size of the MDF shall be coordinated with and approved by the City of San Antonio Information Technology Services Department during the design.

b. All walls inside the MDF shall go to deck. When walls are drywall they shall be double layered drywall on both sides to help reduce the risk of unauthorized entry.

c. The MDF Room shall be centrally located.

d. The floor finish shall be sealed bare concrete or VCT.

e. The MDF shall not contain windows.

f. The MDF shall not be located adjacent to or below restrooms or other water-based facilities, or sources of EMI and mechanical vibration.

g. All walls shall be covered with 4-feet x 8-feet x ¾-inch AC Grade Void Free Fire Retardant Plywood, aligned vertically starting at 12 inches above the finished floor. The plywood shall be installed with the "A" grade side exposed and the "C" grade side against the building or structure. The plywood shall be painted with two coats of fire retardant paint and one stamp from each sheet shall be masked during the painting and uncovered after the paint has dried so the fire rated plywood stamps are visible for inspection.

h. The minimum ceiling height shall be 9-feet above finished floor with the following preferences of finishes.

   1) No ceiling is the preferred finish

   2) Hard ceiling is acceptable if leaving open to structure is not possible.

   3) The last alternative is a lift-out ceiling. If a lift-out ceiling tile is required this shall be coordinated and approved by the City of San Antonio Information Technology Services Department during the design process. If this option is approved it is recommended the ceiling height inside the MDF room be higher than the ceiling height in the corridor outside the MDF so the cables entering into the MDF do not have to pass through the lift-out ceiling inside the MDF room.

i. Entry to the space shall be through a minimum 36-inch by 80-inch clear door opening that swings outward. Door shall be solid core or steel and shall not have any windows. The door shall securely lock and access shall only be by City of San Antonio Information Technology Services Department-approved personnel. The door shall open to an interior hallway or space, it is not recommended the door open to the exterior of the building.

j. The MDF door shall be equipped with a minimum of a City of San Antonio Information Technology Services Department approved cipher lock. When an access control security system is available, the entrance to the MDF shall be equipped with a card reader and electrified door hardware.

k. Fire suppression for the MDF shall be determined by the specific code requirements for the fire protection scheme of the overall building. If a fire suppression system is designed, it shall be

designed to avoid running distribution over the MDF equipment cabinets, racks and equipment.

3. HVAC Requirements

   a. The MDF shall be serviced by a dedicated unit that is part of the building's main system and be equipped with a Split DX system through the wall above the door which cools only when the building HVAC is inadequate or not running. The unit shall maintain a constant 24/7 cooled environment between 68° and 77° F with relative humidity of 40% - 55%.

   b. Changes in temperature and humidity shall be kept to around 1 percent.

   c. The minimum HVAC load shall be designed to displace 12KW of power, or 3.5 Tons, and shall be coordinated with the City of San Antonio Information Technology Services Department during the design and designed to load if the known load is greater at the time of design.

   d. It is recommended the MDF maintain the stated temperature and humidity in the event of building power outages or primary HVAC system failure.

   e. Air delivery shall be aligned in the front of the equipment rows and returns at the rear of the equipment rows when possible.

   f. HVAC sensors and controls shall be located in the MDF at 5-ft AFF.

   g. A hard-wired wall mounted thermostat shall be located inside the MDF Room.

   h. HVAC systems shall be alarmed for power loss, high and low temperature, high and low humidity, smoke detection, compression failures and water flooding.

   i. A simplex data drop shall be installed within 12 inches of the unit so it can be incorporated into the Building Automation System (BAS).

4. Lighting Requirements

   a. Florescent light fixtures shall be at least 24 inches above the top of the highest cabinet, rack or cable runway (approximately 84 inches), 36 inches is recommended.

   b. Lighting shall be a minimum of 50 foot candles at 2 feet above the floor in the entire space.

   c. The MDF shall be equipped with emergency lighting to keep the space lit during power outages.

5. Power Requirements

a. All electrical service outlets shall be labeled with the associated panel and circuit information.

b. Power shall be in two categories: dedicated and convenience.

c. Dedicated

1) The MDF shall be equipped with a minimum of (2) dedicated 208 VAC 20 amp electrical circuits terminated in separate J-boxes and (1) dedicated 120 VAC 20 Amp circuit mounted above each equipment cabinet or rack.

a) The (2) 208 VAC J-boxes shall be mounted to a uni-strut above the equipment cabinets or racks and shall be provided with a 7-foot “SO Type” cord with a female NEMA L6-20R receptacle on the end.

b) The (1) 120 VAC J-box shall be mounted to a uni-strut above the equipment cabinets or racks and shall be provided with a 7-foot “SO Type” cord with a female NEMA 5-20R receptacle on the end.

c) The originating electrical panel shall be properly sized for the loads calculated and shall be located in the nearest Electrical Room.

2) Additional power circuits to be allocated to security, paging CATV, and service provider equipment shall be considered and coordinated at the time of building design.

3) Power distribution to the cabinets shall be achieved by installing rack mounted PDUs.

d. Convenience

1) The MDF shall be equipped with 120 volt 20 Amp duplex NEMA 5-20R receptacles, with maximum (3) receptacles on each circuit. The originating electrical panel shall be equipped with a 20 Amp breaker per circuit.

2) A duplex receptacle shall be spaced at least 1 foot from an adjacent wall and every 6 feet thereafter. A minimum of (1) duplex receptacle shall be placed in each wall and be flush mounted to the finished wall surface at 18 inches above finished floor.

6. Equipment Cabinets / Racks and Cable Management Requirements

a. The MDF shall be equipped with a minimum (2) equipment cabinets or equipment racks. Coordination with and approval by City of San

Antonio Information Technology Services Department during the design is required to determine with equipment cabinets or equipment racks shall be utilized.

b. The MDF shall be equipped with cable runway encircling the room at 84-86 inches above the finished floor, and crossing the room above the equipment cabinets or racks (1) time.

1) Cable runway shall not be secured to the top of the equipment cabinets.

2) A vertical section of cable runway shall be attached to the wall board to manage backbone and service provider cables as they transition from the entrance conduits to the overhead cable runway.

B. Intermediate Distribution Frame (IDF)

1. Description

a. An IDF is a telecommunications space that resides in each building that requires more than a single telecommunications space from which to terminate horizontal workstation cables. There may be multiple IDFs in each building as required to maintain horizontal cable distances of 295 feet for the permanent link.

b. An IDF houses the terminations and cross connections for the intra or inter-building cabling from the MDF and the horizontal user workstation cabling in the area of the building that it serves.

c. Building workstation access network equipment will reside in the IDF.

d. The IDF may share space with other systems such as security panels and paging systems. Space allocation for other systems shall be coordinated with the applicable disciplines.

e. Fire alarm panels and building control panels shall not be located inside the IDF. Space allocation for these systems needs to occur outside of the IDF.

f. The IDF shall not be used for storage, serve as a mechanical or electrical distribution space, nor shall it have within its space main electrical feeds, electrical switch gear, transformers, water or main sprinkler lines.

g. The layout of cabinets, equipment racks, wall fields, and cable management shall be as indicated on the attached diagrams.

2. Architectural Requirements

a. The IDF shall be a minimum of 100 square feet with minimum clear lineal wall lengths of at least 10 feet by 10 feet.

b. All walls shall go to deck. When walls are drywall they shall be double layered drywall on both sides to help reduce the risk of unauthorized entry.

c. The floor finish shall be sealed bare concrete or VCT.

d. The IDF shall not contain windows.

e. IDFs shall be arranged in a stacked formation in multi-story buildings, and not be located next to or below restrooms or other water-based facilities, or sources of EMI and mechanical vibration.

f. All walls shall be covered with 4-feet x 8-feet x ¾-inch AC Grade Void Free Fire Retardant Plywood, aligned vertically starting at 12 inches above the finished floor. The plywood shall be installed with the "A" grade side exposed and the "C" grade side against the building or structure. The plywood shall be painted with two coats of fire retardant paint and one stamp from each sheet shall be masked during the painting and uncovered after the paint has dried so the fire rated plywood stamps are visible for inspection.

g. The minimum ceiling height shall be 9-feet above finished floor with the following preferences of finishes.

    1) No ceiling is the preferred finish

    2) Hard ceiling is acceptable if leaving open to structure is not possible.

    3) The last alternative is a lift-out ceiling. If a lift-out ceiling tile is required this shall be coordinated and approved by the City of San Antonio Information Technology Services Department during the design process. If this option is approved it is recommended the ceiling height inside the MDF room be higher than the ceiling height in the corridor outside the MDF so the cables entering into the MDF do not have to pass through the lift-out ceiling inside the MDF room.

h. Entry to the space shall be through a minimum 36-inch by 80-inch clear door opening that swings outward. Door shall be solid core or steel and shall not have any windows. The door shall securely lock and access shall only be by City of San Antonio Information Technology Services Department-approved personnel. The door shall open to an interior hallway or space, it is not recommended the door open to the exterior of the building.

i. The IDF door shall be equipped with a minimum of a City of San Antonio Information Technology Services Department approved cipher lock. When an access control security system is available, the entrance to the IDF shall be equipped with a card reader and electrified door hardware.

j. Fire suppression for the IDF shall be determined by the specific code requirements for the fire protection scheme of the overall building. If a fire suppression system is designed, it shall be designed to avoid running distribution over the IDF equipment cabinets, racks and equipment.

3. HVAC Requirements

a. The IDF shall be serviced by a dedicated unit that is part of the building's main system and be equipped with Split DX system through the wall above the door which cools only when the building HVAC is inadequate or not running. The unit shall maintain a constant 24/7 cooled environment between 68° and 77° F with relative humidity of 40% - 55%.

b. Changes in temperature and humidity shall be kept to around 1 percent.

c. The minimum HVAC load shall be designed to displace 4KW of power, or 1 Ton, and shall be coordinate with the City of San Antonio Information technology Services Department and designed to load if the load is greater and known at the time of design.

d. It is recommended that the IDF maintain the stated temperature and humidity in the event of building power outages or primary HVAC system failure.

e. Air delivery shall be aligned in the front of the equipment rows and returns at the rear of the equipment rows.

f. HVAC sensors and controls shall be located in the IDF at 5-ft AFF.

g. A hard-wired wall mounted thermostat shall be located inside the IDF Room.

h. HVAC systems shall be alarmed for power loss, high and low temperature, high and low humidity, smoke detection, compression failures and water flooding.

i. A simplex data drop shall be installed within 12 inches of the unit so it can be incorporated into the Building Automation System (BAS).

4. Lighting Requirements

a. Florescent light fixtures shall be at least 24 inches above the top of the highest cabinet, rack or cable runway, 36 inches is recommended.

b. Lighting shall be a minimum of 50 foot candles at 2 feet above the floor in the entire space.

c. The IDF shall be equipped with emergency lighting to keep the space lit during power outages.

5. Power Requirements

a. All electrical service outlets shall be labeled with the associated panel and circuit information.

b. Power for the IDF shall be in two categories: dedicated and convenience.

c. Dedicated

1) The IDF shall be equipped with a minimum of (2) dedicated 208 VAC 20 amp electrical circuits terminated in separate J-boxes and (1) dedicated 120 VAC 20 Amp circuit mounted above each equipment cabinet or rack.

a) The (2) 208 VAC J-boxes shall be mounted to a uni-strut above the equipment cabinets or racks and shall be provided with a 7-foot “SO Type” cord with a female NEMA L6-20 R receptacle on the end.

b) The (1) 120 VAC J-box shall be mounted to a uni-strut above the equipment cabinets or racks and shall be provided with a 7-foot “SO Type” cord with a female NEMA 5-20 R receptacle on the end.

c) The originating electrical panel shall be properly sized for the loads calculated and shall be located in the nearest Electrical Room.

2) Additional power circuits to be allocated to security, paging, and service provider equipment shall be considered and coordinated at the time of building design.

3) Power distribution to the cabinets shall be achieved by installing rack mounted PDUs.

d. Convenience

1) The IDF shall be equipped with 20 Amp duplex NEMA 5-20R receptacles, with maximum (3) receptacles on each circuit. The originating electrical panel shall be equipped with a 20 Amp breaker per circuit.

2) A duplex receptacle shall be spaced at least 1 foot from an adjacent wall and every 6 feet thereafter. A minimum of (1)

duplex receptacle shall be placed in each wall and be flush mounted to the finished wall surface at 18 inches above finished

6. Equipment Cabinets / Racks and Cable Management Requirements

   a. The IDF shall be equipped with a minimum (2) equipment cabinets or equipment racks. Coordination with and approval by City of San Antonio Information Technology Services Department during the design is required to determine with equipment cabinets or equipment racks shall be utilized.

   b. The IDF shall be equipped with cable runway encircling the room at 84-86 inches above the finished floor, and crossing the room above the equipment cabinets or racks (1) time.

      1) Cable runway shall not attach to the top of the equipment cabinets.

      2) A vertical section of cable runway shall be attached to the wall board to manage backbone and service provider cables as they transition from the entrance conduits to the overhead cable runway.

7.02 Entrance Pathways and Conduits

A. Design Principles

1. Pathways and conduits are described herein with regard to capacity, function, and basic design principles and shall be designed by the MEP in accordance with NEC and EIA/TIA-758, Customer-Owned Outside Plant Telecommunications Cabling.

2. Telecommunications Conduit Systems shall:

   a. Be Schedule 80 when placed under ground.

   b. Contain a minimum of (3) 3-inch 3-Cell Maxcell fabric innerducts inside each conduit. Coordination with and approval by the City of San Antonio Information Services Technology Department is required to determine the exact quantity and size of the Maxcell innerducts inside each conduit.

   c. Contain no more than the equivalent of (2) 90 degree bends between pull boxes.

   d. Maintain a minimum bend radius of 10 times the diameter of the conduit.

   e. Not exceed 40 percent fill ratio.

   f. Be placed at a minimum depth of 36-inches from the top of the conduit to the finished grade with 3-inches of compacted sand above and below the buried conduit and an orange metallic tracer warning

tape stenciled “TELECOMMUNICATIONS” 12-inches below grade throughout the entire pathway.

g. Be interrupted by an adequately sized manhole or pull box at least every 600 feet for sections containing up to (1) 90 degree of bend, and at least every 350 feet for sections with the equivalent of (2) 90 degree bends.

1) Manholes and pull boxes shall be of adequate depth for conduits to enter from the side of the pull box and not be required to sweep up into the bottom of box.

2) Manholes shall have a minimum size of 12 feet long 6 feet wide and 7 feet high.

3) Pull boxes shall be a minimum f 24 inches wide, 48 inches long and 30 inches tall.

4) All accessories such as racking, grounding and bonding, ladders and ancillary equipment shall be provided

5) All covers shall be stenciled with “**COSA COMMUNICATIONS**”.

6) Manholes and pull boxes shall be designed to ensure proper construction types and load ratings (i.e., traffic bearing) are observed and utilized based on the location of the pull boxes.

h. Stub up into the MDF and/or IDF at 4-inches above the finished floor, no more than 2-inches from the finished wall and installed parallel to the finished wall.

i. Contain a marked pulling tape with 1800 lbs tension strength, be fitted with bushings, and sealed appropriately at both ends.

B. Service Provider Conduits

1. Minimum of (4) 4-inch conduits shall route underground from the MDF to the edge of the property Right of Way and terminate as required by the service provider(s). Additional conduits shall be added as required.

2. Manholes and pull boxes shall be utilized as required for an ANSI, TIA and BICSI compliant conduit distribution system. The conduit, pull boxes/manholes sizing and construction shall be coordinated with the City of San Antonio Information Technology Service Department and the applicable service provider on a project by project basis.

3. Where the service provider termination location is unidentified at the time of design, the conduits shall route from the MDF to an adequately-sized pull box or manhole at least 30 feet from the building edge.

C. Campus Serving Conduits

1. Minimum of (2) 4-inch conduits shall route underground from the MDF to the IDF on the first floor of each additional building on the campus. Additional conduits shall be added as required if fill capacity exceeds 40 percent.

2. Manholes and pull boxes shall be utilized as required for an ANSI, TIA and BICSI compliant conduit distribution system. The conduit, pull boxes/manholes sizing and construction shall be coordinated with the City of San Antonio Information Technology Service Department and the applicable service provider on a project by project basis.

3. Where only the first building of a campus is being designed, (2) 4-inch conduits for each additional future building shall route from the MDF to an adequately-sized manhole or pull box at least 30 feet from the building edge.

D. Building Entrance for Large Campus

1. For large campuses, the MEP and Structural Engineer shall consider a conduit entrance vault as part of the MDF sub floor.

7.03 Cable Management In Telecommunications Spaces

A. Equipment Cabinets / Equipment Racks

1. Coordination with and approval by City of San Antonio Information Technology Services Department during the design is required to determine with equipment cabinets or equipment racks shall be utilized.

2. Cabinets and racks shall be black aluminum Standard Equipment Cabinets and Racks with EIA 19-inch rails, 84-inch (45 RMU) overall height and rack mount unit markings engraved on the rails.

3. All cabinets and racks shall be equipped with horizontal and vertical cable management as indicated in Exhibit 1.

4. Racks shall be bolted to the concrete floor and to the overhead cable runway utilizing manufacturer-recommended hardware and methods.

B. Overhead Cable Management

1. Overhead Cable Management shall be a Universal Cable Runway made of 3/8” x 1-1/2” x .065” wall rectangular steel tubing with cross members welded at 12-inch intervals.

a. MDFs shall be provided with a minimum of 18-inch wide Universal Cable Runway.

b. IDFs shall be provided with a minimum of 12-inch wide Universal Cable Runway.

c. Universal Cable Runway shall encircle the MDF or IDF room at 84-86 inches above the finished floor, and crossing the room above the equipment cabinets or racks (1) time.

d. The appropriate Radius Drop shall be installed over the racks or cabinets to provide the proper support for the cabling leaving the Runway and entering the rack/cabinet.

e. Universal Cable Runway shall be installed utilizing appropriate hardware to support, join, or attach sections to structures, and shall be supported at a minimum of 5 foot intervals.

f. A vertical section of cable runway shall be attached to the wall board to manage backbone and service provider cables as they transition from the entrance conduits to the overhead cable runway.

g. Universal Cable Runway shall not attach to the full sized equipment cabinets.

7.04 Cable Support in Pathways

A. Main Cable Pathway

1. Main cable pathway shall be wire-basket cable tray with the cables exiting the cable tray supported utilizing j-hooks installed a minimum of every 4-5 feet on center. J-hooks shall be installed utilizing appropriate hardware to support, join and attach j-hooks to structures.

2. Cable tray and J-hook sizing and quantity shall be scaled to the application not to exceed 40 percent fill ratio.

3. A separate j-hook shall be provided for each media type:

a. Backbone Fiber

b. Backbone Copper

c. Horizontal Data

d. Horizontal Wireless

e. Horizontal Audio/Visual

f. Horizontal Security

B. Sleeves and Penetrations

1. Sleeves and penetrations are described herein with regard to capacity, function, and basic design principles and shall be designed in accordance with NEC and EIA/TIA-569-B, Commercial Building Standard for Telecommunications Pathways and Spaces.

2. All sleeves shall be equipped with nylon bushings.

3. All sleeves and penetrations shall be properly fire-stopped to meet local code and to return the wall, floor or structure, back to its original rating.

4. Scale the quantity of sleeves to maintain a 40 percent fill ratio in each sleeve.

5. Above MDF and IDFs install minimum of (4) 4-inch EMT sleeves through the partition wall between the MDF and/or IDF overhead space and the main cabling pathway.

6. Between directly aligned vertically stacked MDF and IDFs install minimum of (3) 4" EMT sleeves through the floor of the upper IDF.

7. Between skewed MDF and IDFs on adjacent floors, install minimum of (3) 4" EMT sleeves through the floor of the upper IDF into the accessible ceiling space below and utilize main cabling pathway to route cabling into the IDF or MDF on the lower floor.

C. Workstation Rough-ins and local power (Typ.)

1. At each flush wall-mounted workstation location, install a 4 11/16 inch by 4 11/16 inch by 2-1/8 inch double-gang back box with double-gang mud ring at 18 inches above the finished floor and at appropriate height for wall mounted phones and above-counter and millwork locations.

   a. Install a minimum of (1) 1-inch conduit from the double-gang box to above accessible ceiling in the room where double-gang box is located. If ceiling is not accessible, install conduit to nearest accessible ceiling.

   b. Conduit shall not exceed the 40 percent fill ratio.

   c. Terminate the conduit above accessible ceiling and install nylon bushing and pull string.

      1) Conduit shall be installed in accordance with EIA/TIA-569-B, contain no more than the equivalent of (2) 90 degree bends and /or 98.4 feet between pull boxes, and maintain a bend radius of 6 times the diameter of the conduit.

2. At locations where the workstation outlets cannot be installed flush in the wall, a Panduit Surface Mounted Raceway that is appropriately sized and designed to meet the specific requirements shall be provided.

   a. When power is provided in the surface mounted raceway a dual-channel surface mounted raceway shall be provided to separate the power from the structured cabling.

   b. The use of surface mounted raceway shall only be considered when no option is available to install the workstation outlets flush in the wall and shall be approved by the City of San Antonio Information

Technology Service Department during the design or prior to installation.

3. At floor-mounted workstation locations, install a floor box or poke-thru specifically designed for the application and environment adequately sized to accommodate the quantity of installed horizontal data cables.

   a. Install a minimum of a (1) 1-inch conduit for every (6) cables from the floor box to above accessible ceiling.

   b. Conduit shall not exceed the 40 percent fill ratio.

4. For modular furniture workstations, a rough-in pathway shall be considered and designed according to the furniture type, quantity of cables, and location as required for each furniture system.

   a. The use of power poles shall be considered only on a case-by-case basis.

5. For ceiling-mounted outlets above accessible ceiling such as Wireless Access Points or IP Cameras, no rough-in is required. The data cable will terminate into a surface-mount box secured to the structure above the accessible ceiling.

6. The electrical engineer shall design at a minimum (1) quad NEMA 5-15R receptacle within 12” of each workstation outlet location.

7.05 Backbone Cabling

A. Service Provider Demarc

1. The service provider demarc shall be located inside the MDF when feasible.

   a. For all new construction, the service provider demarc shall be located inside the MDF. The service provider demarc location and requirements shall be coordinated with City of San Antonio Information Technology Services Department.

   b. For renovation projects where the service provider demarc is not currently located inside the MDF but is required to be relocated because of the renovation, the service provider demarc shall be relocated to the MDF. The service provider demarc location and requirements shall be coordinated with City of San Antonio Information Technology Services Department.

   c. For renovation projects where the service provider demarc is not currently located inside the MDF and is not required to be relocated because of the renovation, the service provider demarc shall be extended to the MDF via copper and/or fiber as required. The service provider demarc location and requirements shall be

coordinated with City of San Antonio Information Technology Services Department.

B. Inter-building Backbone Cabling (Campus)

1. Permanent Structures

a. Copper

1) Inter-building Backbone Copper Cabling shall be Category 3 25-pair 24 AWG flooded UTP home run from the MDF to primary IDF in each of the buildings on the campus. Provide a 10-foot service loop at both ends of each cable stored on the wall above or below the cable runway. Provide a 20-foot service loop in each manhole or pull box. Cables shall be secured with Hook-and-loop tie-wraps in the MDF or IDF.

2) Inter-building Backbone Copper Cabling shall terminate on UL-listed Category 3 25-pair 110 IDC in/out lightning protection panels equipped with UL-listed Category 3 5-pin solid state quick-acting protector modules. The secondary side of the panel shall be connected to a Category 3 24-Port RJ-45 rack mounted patch panel.

b. Fiber

1) Inter-building Backbone Fiber Optic Cabling shall be armored indoor/outdoor 48-Strand single mode home run from the MDF to the primary IDF in each of the buildings on the campus and dressed with fan-out kits as required. Provide a 10-foot service loop at both ends of each cable stored on the wall above or below the cable runway. Provide a 20-foot service loop in each manhole or pull box. Cables shall be secured with Hook-and-loop tie-wraps in the MDF or IDF.

2) All fiber optic terminations shall be fusion spliced to factory provided “pig-tail” LC terminated cables.

C. Intra-building Backbone Cabling

1. Copper

a. Intra-building Backbone Copper Cabling shall be Category 3 25-pair plenum rated 24 AWG UTP home run from the MDF to each of the IDFs in the building. Provide a 10-foot service loop at both ends of each cable stored on the wall above or below the cable runway. Cables shall be secured with Hook-and-loop tie-wraps in the MDF or IDF.

b. Intra-building Backbone Copper Cabling shall terminate on a Category 3 24-Port RJ-45 rack mounted patch panel.

2. Fiber

a. Intra-building Backbone Fiber Optic Cabling shall be armored plenum rated 24-Strand single mode from the MDF to each of the IDFs in the building. Provide a 10-foot service loop at both ends of each cable stored on the wall above or below the cable runway. Cables shall be secured with Hook-and-loop tie-wraps in the MDF or IDF and in the cable runway.

b. All fiber optic terminations shall be fusion spliced to factory provided "pig-tail" LC terminated cables.

7.06 Horizontal Cabling

A. Workstation Cable

1. Horizontal Data Cabling shall be Category 6 UTP, minimum factory sweep tested to 350 MHz, plenum rated, installed from the patch panel in the MDF or IDF to the workstation location not to exceed 295 feet for the permanent link. Provide a 10' service loop in the MDF or IDF, and 1-foot of slack at the conduit stub-up above the outlet. Cable bundles shall be secured with Hook-and-loop tie-wraps.

2. At the workstation, each Category 6 cable shall be terminated in a Category 6 modular jack insert and snapped into a single or double-gang, faceplate. Jack colors are designated in Exhibit 1. Faceplates shall be equipped with designation windows for labeling and blank inserts in unused ports.

3. Wall phone workstations shall be equipped with a studded wall phone faceplate capable of accepting a modular jack insert.

4. All faceplate colors shall be coordinated with the Architect or owner at the time of installation.

5. In the MDF or IDF, each Category 6 cable shall be terminated on the back of Category 6 rack mounted patch panels which are mounted in the equipment cabinets.

6. Category 6 cable shall be terminated with the T568B sequence.

B. Workstation Configurations

1. Office Workstation

a. Install (2) yellow Category 6 cables for data into a 6-port double-gang flush faceplate. The yellow cables shall be terminated with ivory category 6 modular jacks and placed in the first and second position in the faceplate.

1) Furnish a minimum of (1) 2-port workstation on each of (2) walls in each office of approximately 100 sq. ft. Offices that are

smaller or larger shall be designed with consideration given to the size of the office and number of personnel planned for the office.

2) Modular furniture clusters shall be designed to accommodate the user requirements at the time of construction.

2. Ceiling-Mounted Projector Outlet

a. Install (1) Purple (or Violet) Category 6 cable with 20-foot slack loop at each ceiling mounted projector location, terminated with a purple category 6 modular jack placed in a surface mounted box and secured to the building structure when mounted above the accessible ceiling.

1) When a Ceiling Mounted Projector outlet is installed above the accessible ceiling, a purple adhesive dot shall be attached to the ceiling grid directly below the outlet location for future identification of the outlet location.

2) When an accessible ceiling is not available, the designer shall coordinate with the audio/visual consultant to termination requirements.

3) The designer shall coordinate with the audio/visual consultant to determine quantities and locations of projectors.

3. Audio/Visual Control System (Control Panel)

a. Install (1) Purple (or Violet) Category 6 cable at each control panel location, terminated with a purple category 6 modular jack placed in a surface mounted box and secured to the building structure when mounted above the accessible ceiling.

1) When an Audio/Visual Control System Panel outlet is installed above the accessible ceiling, a purple adhesive dot shall be attached to the ceiling grid directly below the outlet location for future identification of the outlet location.

2) When an accessible ceiling is not available, the designer shall coordinate with the audio/visual consultant to termination requirements.

3) The designer shall coordinate with the audio/visual consultant to determine quantities and locations of projectors.

4. Wireless Access Point Outlet

a. Install (1) white Category 6 cable with 20-foot slack loop at each wireless access point location, terminated with a white Category 6 modular jack placed in a surface mounted box and secured to the building structure when mounted above the accessible ceiling.

1) When a Wireless Access Point outlet is installed above the accessible ceiling, a white adhesive dot shall be attached to the ceiling grid directly below the outlet location for future identification of the outlet location.

2) When an accessible ceiling is not available, the outlet for the wireless access point shall be terminated in a 2-port single gang flush mounted faceplate located 6-inches below ceiling not to exceed 12-feet above finished floor.

3) The designer shall coordinate with the City of San Antonio Information Technology Services Department to determine quantities and locations of wireless access points.

5. IP Camera Outlet

a. Install (1) red Category 6 cable with 20-foot slack loop at each IP camera location, terminated on red category 6 modular jack placed in a surface mounted box and secured to the building structure when mounted above the ceiling.

1) When an IP Camera workstation is installed above the accessible ceiling, a red adhesive dot shall be attached to the ceiling grid directly below the outlet location for future identification of the outlet location.

2) When an accessible ceiling is not available, the outlet for the IP camera shall be terminated in a 2-port single gang flush mounted faceplate located 6-inches below the ceiling not to exceed 12-feet above finished floor.

3) The designer shall coordinate with the City of San Antonio Information technology Services Department to determine quantities and locations of IP Cameras.

C. Patch Cables

1. MDF

a. Fiber Patch Cables – Duplex

1) In the MDF furnish to the City of San Antonio Information technology Services Department at the time of substantial completion (1) fiber optic patch cable plus 25 percent spare for each terminated strand.

2) Coordinate with City of San Antonio Information technology Services Department for patch cable types, connectors, lengths and colors.

b. Copper Patch Cables

1) In the MDF, furnish to the City of San Antonio Information Technology Services Department at the time of final substantial completion (1) 28 AWG Category 6 modular non-booted patch cable plus 25 percent spare for each terminated cable.

2) Coordinate with City of San Antonio Information Technology Services Department for lengths of patch cables.

a) Category 6 patch cables for each end user workstation outlet terminated shall be black.

b) Category 6 patch cable for each audio/visual outlet terminated shall be purple.

c) Category 6 patch cable for each wireless access outlet terminated shall be white.

d) Category 6 patch cable for each IP camera outlet terminated shall be red.

2. IDF

a. Fiber Patch Cables – Duplex

1) In each IDF furnish to the City of San Antonio Information Technology Services Department owner at the time of substantial completion (1) fiber optic patch cable plus 25 percent for each terminated strand.

2) Coordinate with City of San Antonio Information technology Services Department for patch cable types, connectors, lengths and colors.

b. Copper Patch Cables

1) In each IDF, furnish to the owner at the time of substantial completion (1) 28 AWG Category 6 modular non-booted patch cable plus 25 percent for each terminated cable.

2) Coordinate with City of San Antonio Information Technology Services Department for lengths of patch cables.

a) Category 6 patch cables for each end user workstation outlet terminated shall be black.

b) Category 6 patch cables for the active equipment side of each end user workstation outlet terminated shall be yellow.

c) Category 6 patch cable for each audio/visual outlet terminated shall be purple.

d) Category 6 patch cable for each wireless access outlet terminated shall be white.

e) Category 6 patch cable for each IP camera outlet terminated shall be red.

7.07 Grounding

A. Grounding shall be designed and installed in accordance with ANSI-J-STD-607-B.

1. Install (1) Telecommunications Main Grounding Busbar (TMGB) in the MDF and (1) Telecommunications Grounding Busbar (TGB) in each IDF.

   a. The TMGB and TGB shall be labeled.

2. Install a Telecommunications Bonding Backbone (TBB), #3/0 AWG stranded green insulated copper conductor in a star topology between the TMGB and each TGB in each building. When IDFs are stacked a single TBB can be daisy-chained between TGBs back to the TMGB.

3. Install an Equipment Bonding Conductor (EBC), #6 AWG green insulated conductor from the TMGB or TGB as applicable to each cable runway system, equipment rack, cabinet, lightning protector, or multi-pair cable with a metallic element.

   a. Install a #3/0 AWG stranded green insulated copper conductor from the TMGB to the main building electrical service ground in each building.

   b. In a metal frame (structural steel) building, where the steel framework is readily accessible within or external to the room; each TGB and TMGB shall be bonded to the vertical steel metal frame using a minimum #6 AWG conductor. The connection to building steel does not eliminate the requirement for the TBB or BC to the service ground.

4. Install a Grounding Equalizer Conductor, #3/0 AWG stranded green insulted copper conductor to interconnect multiple TBBs on the top floor and every 3rd floor when required by ANSI J-STD-607-B.

5. When exceeding 13 feet the conductors shall be sized at 2 kcmil per linear foot of conductor length up to a maximum of 3/0 AWG.

7.08 Labeling

1. Coordination with and approval by the City of San Antonio Information Technology Services Department is required on the specific site labeling schema.

2. All labels shall be typed (not handwritten)

3. Verify room numbers and confirm the final room numbering scheme prior to generating labels.

4. Horizontal Cables shall be labeled within 12 inches from the termination point inside the MDF/IDF.

5. Horizontal Cables shall be labeled within 6 inches from the termination point at the workstation end.

6. Backbone Fiber and Copper Cables shall be labeled within 12 inches of the visible end of the jacket.

7. Fiber Innerduct shall be labeled within 12 inches of the point of entry of the fiber optic enclosure.

8. Cables shall be labeled identically at both ends.

9. MDFs and IDFs Room shall be labeled (signage) with the permanent room designations that match the final building signage for cable labeling.

10. Equipment cabinets or racks in each MDF or IDF shall be labeled in sequential numeric order. Labels shall be centered on the top front of the equipment rack.

11. Fiber optic backbone cable labels shall contain the cable origin room number, the cable destination room number, fiber strand numbers, and type (i.e. MDFA150-IDFC126-48SM001-048).

12. Fiber optic enclosures shall be labeled alpha-numeric starting with the 1st fiber optic enclosure in the top of the 1st equipment rack. A label for each terminated strand shall be securely placed inside each fiber optic enclosure.

13. Fiber optic couplers panels in fiber enclosures shall be labeled at each end by strand denoting MDF and/or IDF the cable comes from, and strand number to and from respectively (i.e. IDFC126-48SM001-048).

14. Copper backbone cables labels shall contain the cable origin room number, the cable destination room number, and cable pairs (i.e. MDFA150-IDFC126/001-025).

15. Horizontal cables shall be labeled identically at each end with the destination end and origin room number, patch panel number, and port number. (i.e. IDFC126-C115-B5).

16. Patch panels in each closet shall be uniquely alphabetically labeled sequentially starting with the first Patch Panel in the top of the first equipment rack (i.e. A, B, C, D, E, etc.). Each MDF or IDF starts with A and shall not repeat a letter.

17. 110-type blocks shall contain the origin room number, destination room number, and pair numbers, under each pair termination. (i.e. MDFA150-IDFC126-PR 1-50). 110-type block labels shall be printed on product-specific label strips and placed into label holders.

18. Workstation Faceplates shall be labeled denoting origin MDF/IDF Room Number, patch panel, and port number (i.e. IDFC126-B5).

7.09 Testing

A. All test results shall be submitted to the owner along with all other final documentation. Test results shall be submitted in both PDF format and the Native Tester format along with the software needed to read the Native Tester Format.

B. Terminated fiber optic strands shall be tested bi-directionally end to end be and certified in accordance with applicable industry standards and manufacturer certifications requirements with an OTDR field and Light Meter tester that is within their calibration period.

C. Terminated backbone copper cable links shall be tested in accordance with applicable industry standards and manufacturer certification requirements for attenuation, continuity, and pin-mapping with approved field tester(s) that are within their calibration period.

D. Terminated Category 6 UTP cable links shall be tested in accordance with applicable industry standards and manufacturer certification requirements for Category 6 compliance with approved field tester(s) that are within their calibration period.

7.10 As-Built Documentation

A. Produce drawings depicting the condition of the Structured Cabling System as installed produced in AutoCAD 2010 or higher and provided in hardcopy, electronically in .DWG and .PDF format. Include the exact dimensions and locations of MDF and IDF layouts, wall elevations, equipment cabinet elevations, cable runways, cable tray, sleeves, backbone and horizontal cable pathways, workstation locations, and numbering and labeling scheme.

B. A half-size hard copy of the as-built drawings for the applicable region served by the MDF and/or IDFs shall be provided in MDF and each IDF for reference.

C. Produce cable records for the Structured Cabling System as installed to include a list of all horizontal and backbone cables produced in an Excel format and provided in hardcopy and electronic format indicating cable number, unique cable label, cable type, origin and destination, length, termination method, and pass/fail result.

D. Produce (3) hard copies of all test results for each cable, to include technician's name and date stamp, a list of tested cables, and the individual results for each cable tested. Test results shall be furnished on CD ROM to include native file format and .PDF format.

PART 8 - SUMMARY OF STANDARDS

8.01 Summary

A. All aspects of this City of San Antonio Structured Cabling Infrastructure Standards shall be applied to the design process for new, leased and renovated facilities.

B. A Division 27 specification and T-Series drawings for the Structured cabling System shall be commissioned and issued by the Architect during the design phases for each facility or project. Drawings and specifications shall be sealed with a current RCDD stamp.

PART 9 - EXHIBITS

EXHIBIT 1 - ACCEPTABLE MANUFACTURERS / PRODUCTS

A. The following list or manufacturers / products is provided for reference only and is not all inclusive. All manufacturers / products shall be verified by the designer for each project and confirmed with The City of San Antonio Information Technology Services Department prior to issuing any construction documents.

B. Where specific manufacturers / products are mentioned, an equivalent will be considered following an official submission of product literature and written acceptance by the City of San Antonio Information Technology Services Department.

C. Fiber Optic Backbone Cable

1. Indoor

   a. 9/125µm Single-Mode Plenum Rated Armored

      1) Panduit

      2) Chromatic

      3) Commscope

      4) Corning

      5) Systimax

2. Outdoor Underground

   a. 9/125µm Indoor/Outdoor Single-Mode Armored

      1) Panduit

      2) Chromatic

      3) Commscope

      4) Corning

      5) Systimax

3. Outdoor Aerial

   a. 9/125µm Indoor/Outdoor Single-Mode Armored

      1) Panduit

      2) Chromatic

      3) Commscope

      4) Corning

5) Systimax

4. Fiber Optic Fabric Innerduct

a. Indoor Plenum Rated

1) MaxCell

b. Outdoor

1) MaxCell

D. Copper Backbone Cable

1. Indoor

a. Category 3 24 AWG Unshielded Twisted Pair (UTP) Plenum (White Sheath)

1) General

2) Mohawk

3) Superior

4) Systimax

2. Outdoor Underground

a. Category 3 24 AWG Unshielded Twisted Pair (UTP) Flooded (PE-89)

1) General

2) Mohawk

3) Superior

4) Systimax

3. Outdoor Aerial

a. 24 AWG Unshielded Twisted Pair (UTP) Self-Supported

1) General

2) Mohawk

3) Superior

4) Systimax

E. Horizontal Cable

1. Category 6 UTP Plenum (Minimum 350 MHz)

a. Network Access (Yellow Sheath)

1) General

2) Panduit

b. Wireless Access Points (White Sheath)

1) General

2) Panduit

c. AV Access (Purple Sheath)

1) General

2) Panduit

d. IP Security (Red Sheath)

1) General

2) Panduit

F. Fiber Optic Cable Termination

1. Fiber Enclosure

a. Panduit Opticom Rack Mount Fiber Enclosure – Part No. FRMEXX

2. 9µm Single-Mode Fiber Coupler Panel

a. 9µm Panduit Opticom LC Fiber Adapter Panel – Part No. FAP6WBUDLCZ

3. Fiber Blank Panel

a. Panduit Opticom Blank Fiber Adapter Panel – Part No. FAPB

4. 9µm Single-Mode LC Pigtails

a. Panduit Opti-Core OS1/OS2 Single-Mode Fiber Optic Pigtails (LC to Pigtail) – Part No. F9B10-NM1Y

5. Loose Tube Fiber Fan-Out Kit

a. Panduit

G. Copper Cable Termination

1. Building Entrance Terminals

a. Primary Copper Protectors

1) Circa 50-Pair 110 Style Lightning Protection Block

2) Solid State Digital Series Surge Protection Modules

2. Backbone Cable Termination Panels

a. Rack Mounted Voice Patch Panels

1) Panduit Voice Patch Panel – Part No. VP24382TV25Y

3. Category 6 Horizontal Rack Mounted Patch Panels

a. Category 6 48-Port Patch Panels – Panduit Mini-Com Flush Mount Modular Patch Panels - Part No. CPP48FMWBLY

4. Category 6 Modular Jacks

a. Network Access

1) Equipment Room/Telecommunications Room End (Black)

a) Panduit Mini-com TX6 Plus UTP Jack Modules Part No. CJ688TGBL

2) Field End (Ivory)

a) Panduit Mini-Com TX6 Plus UTP Jack Modules Part No. CJ688TGEI

b. Wireless Access Points

1) Equipment Room/Telecommunications Room End (White)

a) Panduit Mini-Com TX6 Plus UTP Jack Modules Part No. CJ688TGWH

2) Field End (White)

a) Panduit Mini-Com TX6 Plus UTP Jack Modules Part No. CJ688TGWH

c. AV Access (Violet)

1) Equipment Room/Telecommunications Room End (Violet)

a) Panduit Mini-Com TX6 Plus UTP Jack Modules Part No. CJ688TGVL

2) Field End (Violet)

a) Panduit Mini-Com TX6 Plus UTP Jack Modules Part No. CJ688TGVL

d. IP Security

1) Equipment Room/Telecommunications Room End (Red)

a) Panduit Mini-Com TX6 Plus UTP Jack Modules Part No. CJ688TGRD

2) Field End (Red)

a) Panduit Mini-Com TX6 Plus UTP Jack Modules Part No. CJ688TGRD

5. Telecommunications Faceplates with Designation Window

a. 2-Port Single Gang Flush (Stainless Steel)

1) Panduit Mini-Com Stainless Steel Faceplates with Labels Part No. CFPL2SY

b. 4-Port Single Gang Flush (Stainless Steel)

1) Panduit Mini-Com Stainless Steel Faceplates with Labels Part No. CFPL4SY

c. 4-Port Double Gang Flush (Stainless Steel)

1) Panduit Mini-Com Stainless Steel Faceplates with Labels Part No. CFPL6S-2GY

6. Wall Phone Faceplate (Stainless Steel)

a. Panduit Phone Wall Plate Module Part No. KWP6PY

7. 2-Port Surface Mount Box (White)

a. Panduit Mini-Com Surface Mount Box Part No. CBXJ2HW-A

8. Blank Insert (White)

a. Panduit Mini-Com Blank Module – Part No. CMBWH-X

H. Equipment Racks, Cabinets, Wire Management, and Accessories

1. Two-Post Rack - 19” x 84” Open Frame (Black)

a. Panduit Part No. CMR19x84NU

2. Four-Post Open Frame Rack – 23.3” x 84” x 30.2” (Black)

a. Panduit Part No. CMR4P84

3. Equipment Cabinet (Black)

a. Chatsworth F-Series TeraFrame Gen 3 Cabinet Part No. FF2J-113B-C22A

b. Chatsworth CUBE-iT Wall-Mounted Cabinet 48” H X 24” W X 30” D Black Part No. 11996-748

c. Chatsworth Thin-Line II Wall-Mounted Cabinet 36” H X 26” W X 12” D 6U Part No. 13050-723

4. Vertical Wire Managers (Black)

a. Patch Runner Double Sided Vertical Cable Management System Panduit - Part No. PRV6

b. Patch Runner Vertical Cable Management Door Panduit - Part No. PRD6

c. Chatsworth F-Series TeraFrame Gen 3 Finger Cable Manager – Part No. 39112-C14

5. Horizontal Wire Managers (Black)

a. Net Manager Double Sided High Capacity Horizontal Cable Mangers Panduit - Part No. NCMH2

I. Cable Runway (Ladder Type)

1. 12” Universal Cable Runway

a. Chatsworth - Part No. 10250-712

2. 12” Cable Runway Radius Drop, Cross Member

a. Chatsworth - Part No. 12100-712

3. 12” Cable Runway Radius Drop, Stringer

a. Chatsworth - Part No. 12101-712

4. 18” Universal Cable Runway

a. Chatsworth - Part No. 10250-718

5. 18” Cable Runway Radius Drop, Cross Member

a. Chatsworth - Part No. 12100-718

6. 18” Cable Runway Radius Drop, Stringer

a. Chatsworth - Part No. 12101-718

7. Cable Runway Butt-Splice Kit

a. Chatsworth - Part No. 11301-701

8. Cable Runway Junction-Splice Kit

a. Chatsworth - Part No. 11302-701

9. Cable Runway Butt-Swivel Splice Kit
   a. Chatsworth - Part No. 10487-701

10. Rack-to-Runway Mounting Kit
    a. Chatsworth - Part No. 10595-712
11. Cable Runway Elevation Kit for Racks
    a. Chatsworth - Part No. 10506-706
12. Cable Runway Elevation Kit for Cabinets
    a. Chatsworth - Part No. 10506-716
13. 12” Triangular Support Bracket, Aluminum
    a. Chatsworth - Part No. 11312-712
14. 12” Wall Angle Support Kit, Cable Runway
    a. Chatsworth - Part No. 11421-712
15. 18” Triangular Support Bracket, Aluminum
    a. Chatsworth - Part No. 11312-718
16. 18” Wall Angle Support Kit, Cable Runway
    a. Chatsworth - Part No. 11421-718
17. 90 Degree Runway-Splice Kit
    a. Chatsworth - Part No. 11314-701
18. 45 Degree Runway-Splice Kit
    a. Chatsworth - Part No. 11313-712
19. Foot Kit, Cable Runway
    a. Chatsworth - Part No. 11309-001
20. Vertical Wall Brackets (pair)
    a. Chatsworth - Part No. 10608-701
21. Threaded Ceiling Kit, Cable Runway
    a. Chatsworth - Part No. 11310-001

22. Threaded Rod Cover
    a. Chatsworth - Part No. 11085-001
23. Protective End Caps for Cable Runway
    a. Chatsworth - Part No. 10642-001

24. End Closing Kit, Cable Runway
    a. Chatsworth - Part No. 11700-712

J. Pathway Cable Support
    1. Panduit J-Mod Cable Support System
    2. Erico – CADDY CAT LINKS J-Hook Series
    3. Panduit Plenum Rated Hook & Loop (Black)

K. Grounding and Bonding
    1. Grounding Bus Bar, 20”
        a. Chatsworth - Part No. 40153-020
    2. Grounding Bus Bar, 12”
        a. Chatsworth - Part No. 13622-012
    3. Cable Runway Ground Strap Kit
        a. Chatsworth - Part No. 40164-001
    4. One Mounting Hole Ground Terminal Block
        a. Chatsworth - Part No. 08009-001
    5. Horizontal Rack Ground Bar for Wall Mount Cabinet
        a. Chatsworth - Part No. 10610-019
    6. #6 AWG Solid Green Insulation Ground Wire
        a. Superior Essex - Part No. 12-018-04
    7. #3/0 Stranded Green Insulation Ground Wire
    8. Cable Sheath Bonding Clamp

L. Labeling
    1. Permanent Labels for Fiber Optic Cables

a. Brady

b. Panduit Self Laminating Labels

2. Permanent Labels for Innerduct

a. Panduit Dome-Top Ty Marker

3. Permanent Labels for Copper Cables

a. Panduit Self-Laminating Labels

4. Permanent Labels for Backbone Fiber Optic Cables

a. Panduit Dome-Top Ty Marker

5. Permanent Labels for Patch Panels

a. Panduit Component Label

6. Permanent Labels for Faceplates

a. Panduit Component Label

M. Fire Stop

1. STI Spec Seal Part No.

2. 3M Products Part No.

N. Plywood

1. 8’ H x 4’ W x ¾” Sheets of BC grade fire-rated plywood

O. Fire Retardant Paint (White)

P. Fiber Patch Cables

1. Panduit

2. Corning

Q. Copper Patch Cables

1. Panduit

EXHIBIT 2 – TYPICAL DETAILS

End of Guideline

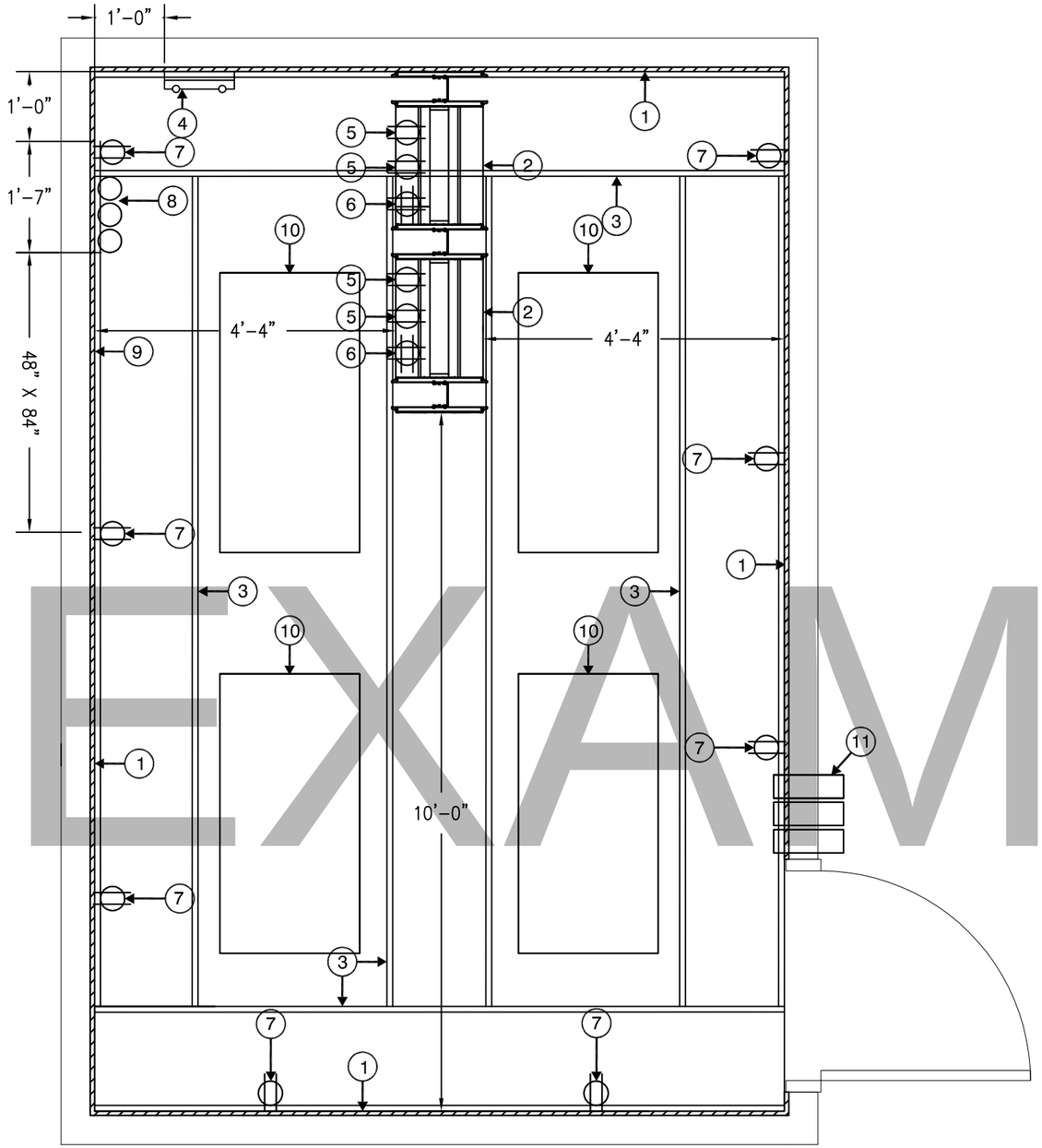

1 / xx

Typical MDF Room Layout With Racks

SCALE: 1/2"=1'-0"

TYPICAL MDF ROOM LAYOUT WITH RACKS KEYED NOTES

1. 4 – FEET X 8 – FEET X 3/4 – INCH AC GRADE VOID FREE FIRE RATED PLYWOOD INSTALLED VERTICALLY STARTING AT 12 – INCHES ABOVE FINISHED FLOOR ON ALL PERIMETER WALLS. THE PLYWOOD SHALL BE INSTALLED WITH THE "A" GRADE SIDE EXPOSED AND THE "C" GRADE SIDE AGAINST THE BUILDING WALL OR STRUCTURE. THE PLYWOOD SHALL BE PAINTED WITH TWO COATS OF FIRE RETARDANT PAINT AND ONE STAMP FROM EACH SHEET SHALL BE MASKED DURING THE PAINTING AND UNCOVERED AFTER THE PAINT HAS DRIED SO THE FIRE RATED PLYWOOD STAMPS ARE VISIBLE FOR INSPECTION. (BY DIV. 27)
2. 19 – INCH X 84 – INCH EQUIPMENT RACK WITH VERTICAL CABLE MANAGERS. (BY DIV. 27)
3. 18 – INCH LADDER RACK MOUNTED AT 84 – INCHES ABOVE FINISHED FLOOR. (BY DIV. 27)
4. GROUND BUS BAR MOUNTED AT 78 – INCHES ABOVE FINISHED FLOOR. (BY DIV. 27)
5. DEDICATED 208 VAC 20 AMP CIRCUIT IN J–BOX MOUNTED TO UNISTRUT ABOVE THE LADDER RACK AND PROVIDED WITH A 7 – FT SO TYPE CORD WITH FEMALE NEMA L6 – 20R RECEPTACLE ON THE END. (BY DIV. 26)
6. DEDICATED 120 VAC 20 AMP CIRCUIT IN J–BOX MOUNTED TO UNISTRUT ABOVE THE LADDER RACK AND PROVIDED WITH A 7 – FT SO TYPE CORD WITH FEMALE NEMA 5 – 20R RECEPTACLE ON THE END. (BY DIV. 26)
7. 20 AMP CIRCUIT WITH QUAD RECEPTACLE NEMA 5–20R FLUSH MOUNTED TO THE FINISHED WALL SURFACE AT 18 – INCHES ABOVE FINISHED FLOOR. OUTLETS SHALL BE SPACED NO FARTHER APART THAN 6 – FEET. MAXIMUM OF (6) PER CIRCUIT. (BY DIV. 26)
8. (3) 4 – INCH CONDUITS TERMINATED 4 – INCHES ABOVE FINISHED FLOOR AND NO FARTHER THAN 2 INCHES FROM THE WALL FOR SERVICE PROVIDER. CONTRACTOR SHALL PROVIDE PULL STRING AND NYLON BUSHINGS AND CAPS ON END OF CONDUIT. (BY DIV. 26)
9. 48 – INCHES WIDE X 84 – INCHES HIGH RESERVED FOR SERVICE PROVIDER TERMINATION. (BY DIV. 27)
10. TYPICAL LIGHTING ORIENTATION, ENSURE THERE IS 50 FOOT CANDLES AT 2 – FEET ABOVE FINISHED FLOOR. (BY DIV. 26)
11. (3) 4 – INCH EMT CONDUIT SLEEVES ABOVE ACCESSIBLE CEILING WITH NYLON BUSHINGS ON EACH END AND SECURED TO WALL. CONDUIT SLEEVES SHALL BE SEALED ON THE EXTERIOR AND INTERIOR TO RETURN THE WALL BACK TO THE ORIGINAL RATING. IF WALL IS NOT RATED CONDUIT SHALL BE SEALED ON THE EXTERIOR AND INTERIOR TO REDUCE NOISE TRAVELING THROUGH THE PENETRATION. CONDUIT SLEEVES SHALL BE USED FOR LOW VOLTAGE DATA VOICE VIDEO AND SECURITY ONLY. (BY DIV. 26)

EXAMPLE

COMBS Consulting Group
Technology & Security
8200 IH-10 West, Ste. 103 Phone : 210-698-7887
San Antonio, Texas 78230

PROJECT NAME:

CITY OF SAN ANTONIO
STRUCTURED CABLING INFRASTRUCTURE STANDARDS

DATE: 03-04-14

SHEET: 1

SCALE: As Shown

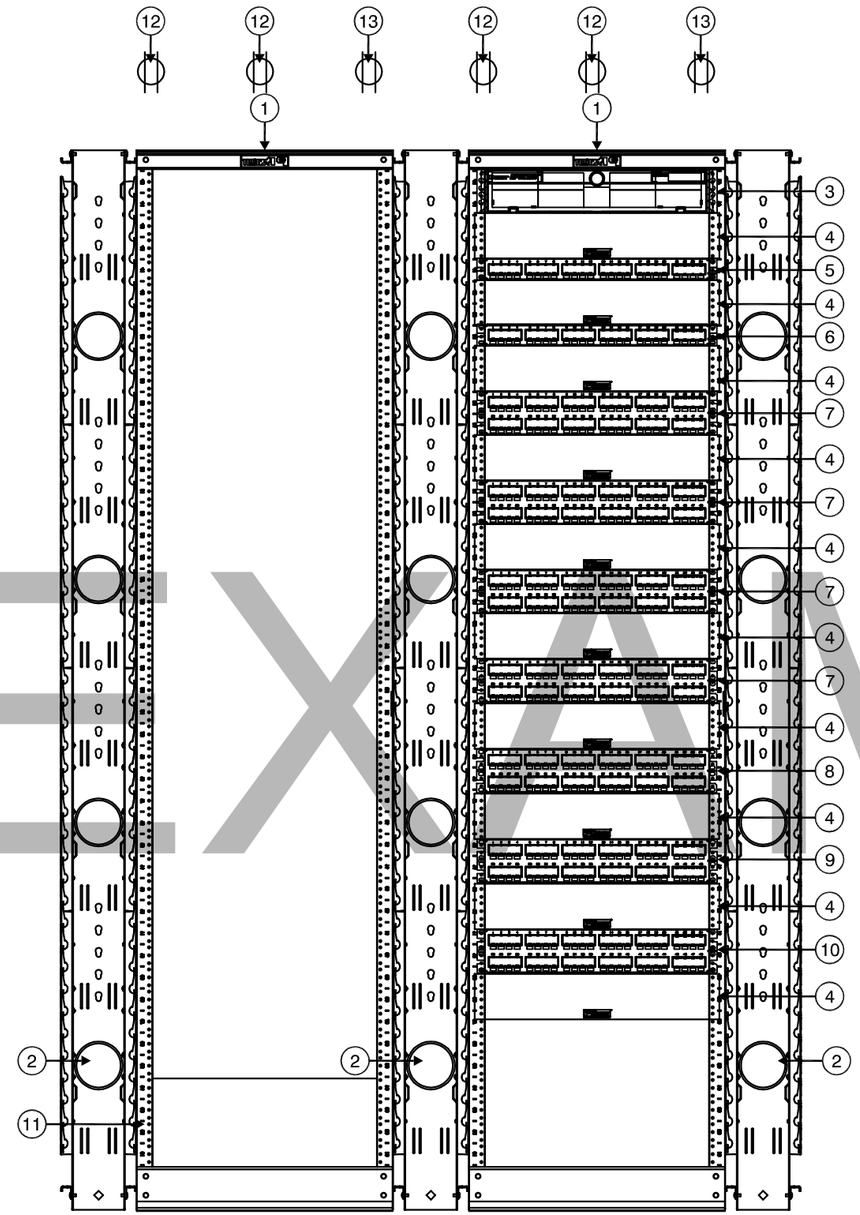

Typical MDF Rack Elevation

1 / XX

SCALE: 1"=1'-0"

TYPICAL MDF ROOM RACK ELEVATION KEYED NOTES

1. 19 – INCH X 84 – INCH EQUIPMENT RACK. (BY DIV. 27)
2. DOUBLE – SIDED VERTICAL CABLE MANAGER. (BY DIV. 27)
3. RACK MOUNTED 48 – PORT FIBER OPTIC ENCLOSURE FOR SINGLE MODE FIBER OPTIC CABLE. (BY DIV. 27)
4. DOUBLE–SIDED HORIZONTAL CABLE MANAGER. (BY DIV. 27)
5. RACK MOUNTED 24 – PORT VOICE PATCH PANEL FOR INCOMING TELCO SERVICE. (BY DIV. 27)
6. RACK MOUNTED 24 – PORT VOICE PATCH PANEL. (BY DIV. 27)
7. RACK MOUNTED 48 – PORT CATEGORY 6 PATCH PANEL FOR DATA. (BY DIV. 27)
8. RACK MOUNTED 48 – PORT CATEGORY 6 PATCH PANEL FOR WIRELESS ACCESS POINTS. (BY DIV. 27)
9. RACK MOUNTED 48 – PORT CATEGORY 6 PATCH PANEL FOR AUDIO VISUAL SYSTEMS. (BY DIV. 27)
10. RACK MOUNTED 48 – PORT CATEGORY 6 PATCH PANEL FOR IP SECURITY. (BY DIV. 27)
11. (4) RACK MOUNTED UNITS OF SPACE FOR OWNER PROVIDED / OWNER INSTALLED UPS. (BY DIV. 27)
12. DEDICATED 208 VAC 20 AMP CIRCUIT IN J–BOX MOUNTED TO UNISTRUT ABOVE THE LADDER RACK AND PROVIDED WITH A 7 – FT SO TYPE CORD WITH FEMALE NEMA L6 – 20R RECEPTACLE ON THE END. (BY DIV. 26)
13. DEDICATED 120 VAC 20 AMP CIRCUIT IN J–BOX MOUNTED TO UNISTRUT ABOVE THE LADDER RACK AND PROVIDED WITH A 7 – FT SO TYPE CORD WITH FEMALE NEMA 5 – 20R RECEPTACLE ON THE END. (BY DIV. 26)

EXAMPLE

COMBS Consulting Group technology & security
8200 IH-10 West, Ste. 103 Phone : 210-688-7887
San Antonio, Texas 78230

PROJECT NAME:

CITY OF SAN ANTONIO
STRUCTURED CABLING INFRASTRUCTURE STANDARDS

DATE: 03-04-14

SHEET: 2

SCALE: As Shown

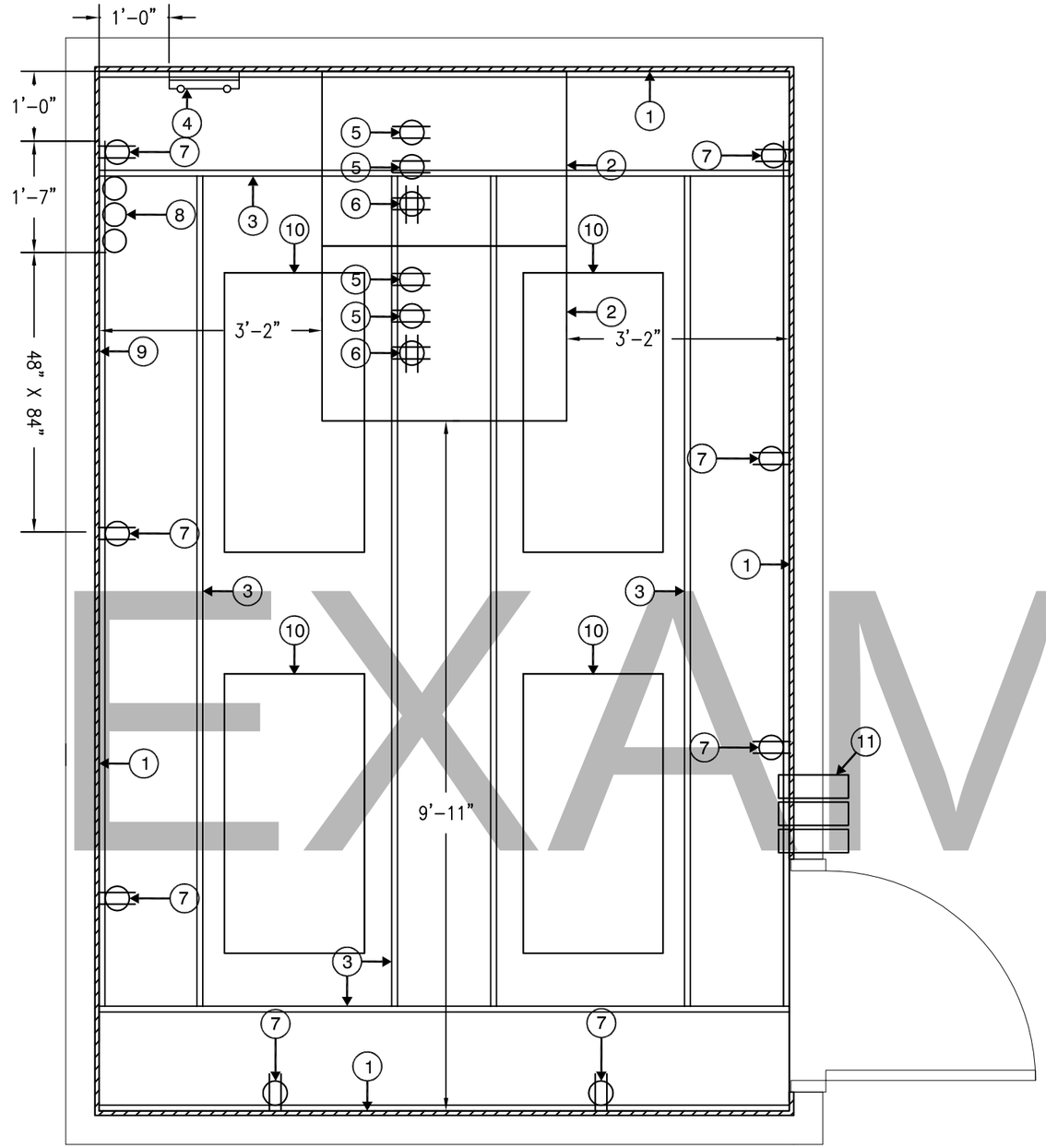

Typical MDF Room Layout With Cabinets

1 / xx

SCALE: 1/2"=1'-0"

TYPICAL MDF ROOM LAYOUT WITH CABINETS KEYED NOTES

1. 4 – FEET X 8 – FEET X 3/4 – INCH AC GRADE VOID FREE FIRE RATED PLYWOOD INSTALLED VERTICALLY STARTING AT 12 – INCHES ABOVE FINISHED FLOOR ON ALL PERIMETER WALLS. THE PLYWOOD SHALL BE INSTALLED WITH THE "A" GRADE SIDE EXPOSED AND THE "C" GRADE SIDE AGAINST THE BUILDING WALL OR STRUCTURE. THE PLYWOOD SHALL BE PAINTED WITH TWO COATS OF FIRE RETARDANT PAINT AND ONE STAMP FROM EACH SHEET SHALL BE MASKED DURING THE PAINTING AND UNCOVERED AFTER THE PAINT HAS DRIED SO THE FIRE RATED PLYWOOD STAMPS ARE VISIBLE FOR INSPECTION. (BY DIV. 27)
2. 27.6 – INCH X 84.6 – INCH TERAFRAME CABINET WITH VERTICAL CABLE MANAGERS. (BY DIV. 27)
3. 12 – INCH LADDER RACK MOUNTED AT 84 – INCHES ABOVE FINISHED FLOOR. (BY DIV. 27)
4. GROUND BUS BAR MOUNTED AT 78 – INCHES ABOVE FINISHED FLOOR. (BY DIV. 27)
5. DEDICATED 208 VAC 20 AMP CIRCUIT IN J–BOX MOUNTED TO UNISTRUT ABOVE THE LADDER RACK AND PROVIDED WITH A 7 – FT SO TYPE CORD WITH FEMALE NEMA L6 – 20R RECEPTACLE ON THE END. (BY DIV. 26)
6. DEDICATED 120 VAC 20 AMP CIRCUIT IN J–BOX MOUNTED TO UNISTRUT ABOVE THE LADDER RACK AND PROVIDED WITH A 7 – FT SO TYPE CORD WITH FEMALE NEMA 5 – 20R RECEPTACLE ON THE END. (BY DIV. 26)
7. 20 AMP CIRCUIT WITH QUAD RECEPTACLE NEMA 5–20R FLUSH MOUNTED TO THE FINISHED WALL SURFACE AT 18 – INCHES ABOVE FINISHED FLOOR. OUTLETS SHALL BE SPACED NO FARTHER APART THAN 6 – FEET. MAXIMUM OF (6) PER CIRCUIT. (BY DIV. 26)
8. (3) 4 – INCH CONDUITS TERMINATED 4 – INCHES ABOVE FINISHED FLOOR AND NO FARTHER THAN 2 INCHES FROM THE WALL FOR SERVICE PROVIDER. CONTRACTOR SHALL PROVIDE PULL STRING AND NYLON BUSHINGS AND CAPS ON END OF CONDUIT. (BY DIV. 26)
9. 48 – INCHES WIDE X 84 – INCHES HIGH RESERVED FOR SERVICE PROVIDER TERMINATION. (BY DIV. 27)
10. TYPICAL LIGHTING ORIENTATION, ENSURE THERE IS 50 FOOT CANDLES AT 2 – FEET ABOVE FINISHED FLOOR. (BY DIV. 26)
11. (3) 4 – INCH EMT CONDUIT SLEEVES ABOVE ACCESSIBLE CEILING WITH NYLON BUSHINGS ON EACH END AND SECURED TO WALL. CONDUIT SLEEVES SHALL BE SEALED ON THE EXTERIOR AND INTERIOR TO RETURN THE WALL BACK TO THE ORIGINAL RATING. IF WALL IS NOT RATED CONDUIT SHALL BE SEALED ON THE EXTERIOR AND INTERIOR TO REDUCE NOISE TRAVELING THROUGH THE PENETRATION. CONDUIT SLEEVES SHALL BE USED FOR LOW VOLTAGE DATA VOICE VIDEO AND SECURITY ONLY. (BY DIV. 26)

EXAMPLE

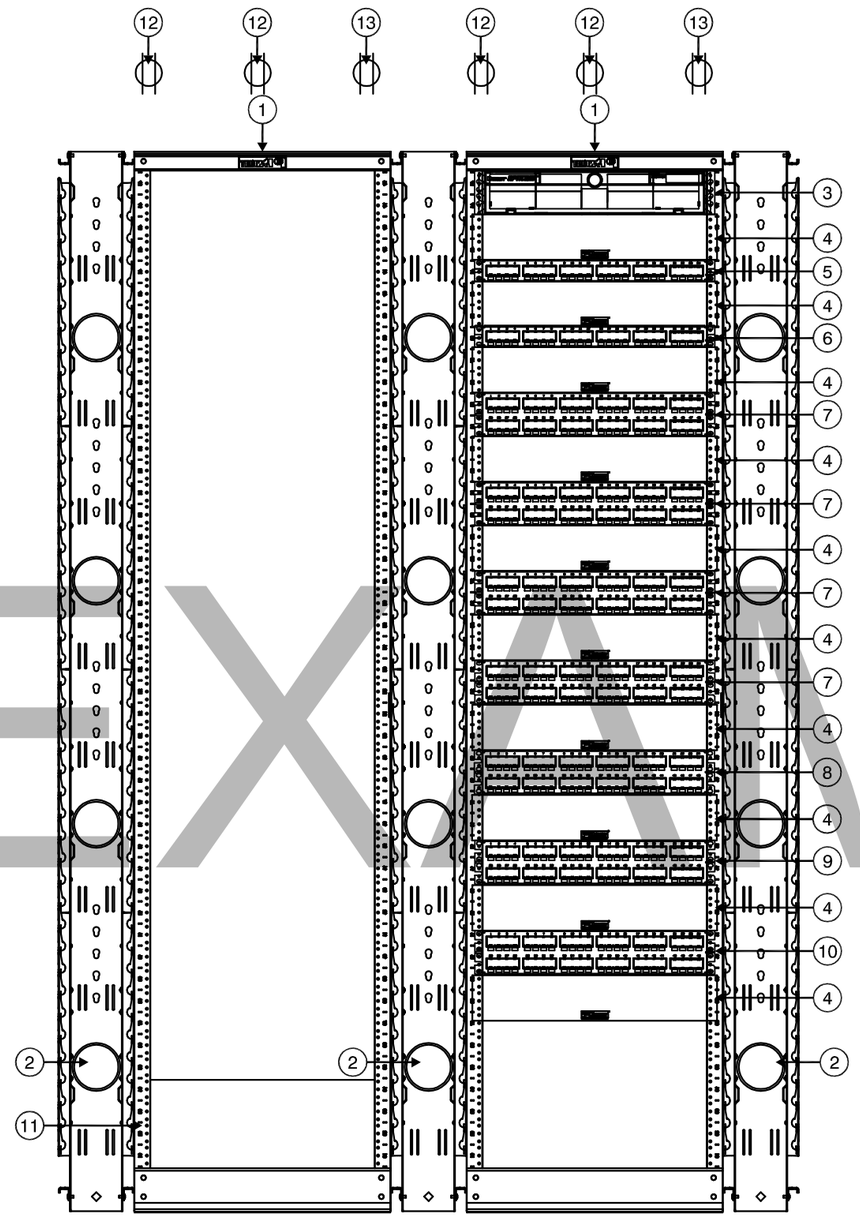

Typical MDF Cabinet Elevation

1 / xx

SCALE: 1"=1'-0"

TYPICAL MDF ROOM CABINET ELEVATION KEYED NOTES

1. 27.6 – INCH X 84.6 – INCH TERAFRAME CABINET. (BY DIV. 27)
2. TERAFRAME DOUBLE – SIDED VERTICAL FINGER CABLE MANAGER. (BY DIV. 27)
3. RACK MOUNTED 48 – PORT FIBER OPTIC ENCLOSURE FOR SINGLE MODE FIBER OPTIC CABLE. (BY DIV. 27)
4. DOUBLE–SIDED HORIZONTAL CABLE MANAGER. (BY DIV. 27)
5. RACK MOUNTED 24 – PORT VOICE PATCH PANEL FOR INCOMING TELCO SERVICE. (BY DIV. 27)
6. RACK MOUNTED 24 – PORT VOICE PATCH PANEL. (BY DIV. 27)
7. RACK MOUNTED 48 – PORT CATEGORY 6 PATCH PANEL FOR DATA. (BY DIV. 27)
8. RACK MOUNTED 48 – PORT CATEGORY 6 PATCH PANEL FOR WIRELESS ACCESS POINTS. (BY DIV. 27)
9. RACK MOUNTED 48 – PORT CATEGORY 6 PATCH PANEL FOR AUDIO VISUAL SYSTEMS. (BY DIV. 27)
10. RACK MOUNTED 48 – PORT CATEGORY 6 PATCH PANEL FOR IP SECURITY. (BY DIV. 27)
11. (4) RACK MOUNTED UNITS OF SPACE FOR OWNER PROVIDED / OWNER INSTALLED UPS. (BY DIV. 27)
12. DEDICATED 208 VAC 20 AMP CIRCUIT IN J–BOX MOUNTED TO UNISTRUT ABOVE THE LADDER RACK AND PROVIDED WITH A 7 – FT SO TYPE CORD WITH FEMALE NEMA L6 – 20R RECEPTACLE ON THE END. (BY DIV. 26)
13. DEDICATED 120 VAC 20 AMP CIRCUIT IN J–BOX MOUNTED TO UNISTRUT ABOVE THE LADDER RACK AND PROVIDED WITH A 7 – FT SO TYPE CORD WITH FEMALE NEMA 5 – 20R RECEPTACLE ON THE END. (BY DIV. 26)

EXAMPLE

COMBS Consulting Group technology & security
8200 IH-10 West, Ste. 103 Phone : 210-698-7887
San Antonio, Texas 78230

PROJECT NAME:

CITY OF SAN ANTONIO
STRUCTURED CABLING INFRASTRUCTURE STANDARDS

DATE: 03-04-14

SHEET: 4

SCALE: As Shown

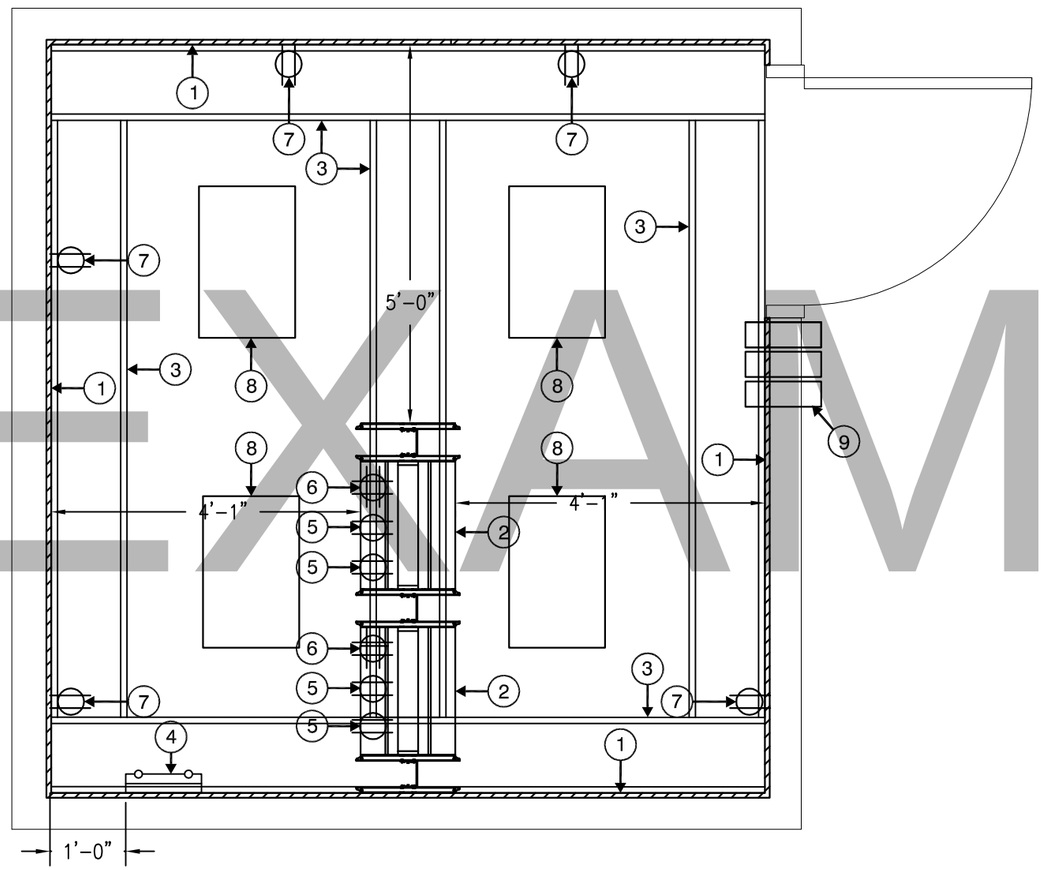

EXAMPLE

1 / xx Typical IDF Room Layout With Racks

SCALE: 1/2"=1'-0"

TYPICAL IDF ROOM LAYOUT WITH RACKS KEYED NOTES

1. 4 – FEET X 8 – FEET X 3/4 – INCH AC GRADE VOID FREE FIRE RATED PLYWOOD INSTALLED VERTICALLY STARTING AT 12 – INCHES ABOVE FINISHED FLOOR ON ALL PERIMETER WALLS. THE PLYWOOD SHALL BE INSTALLED WITH THE "A" GRADE SIDE EXPOSED AND THE "C" GRADE SIDE AGAINST THE BUILDING WALL OR STRUCTURE. THE PLYWOOD SHALL BE PAINTED WITH TWO COATS OF FIRE RETARDANT PAINT AND ONE STAMP FROM EACH SHEET SHALL BE MASKED DURING THE PAINTING AND UNCOVERED AFTER THE PAINT HAS DRIED SO THE FIRE RATED PLYWOOD STAMPS ARE VISIBLE FOR INSPECTION. (BY DIV. 27)
2. 19 – INCH X 84 – INCH EQUIPMENT RACK WITH VERTICAL CABLE MANAGERS. (BY DIV. 27)
3. 12 – INCH LADDER RACK MOUNTED AT 84 – INCHES ABOVE FINISHED FLOOR. (BY DIV. 27)
4. GROUND BUS BAR MOUNTED AT 78 – INCHES ABOVE FINISHED FLOOR. (BY DIV. 27)
5. DEDICATED 208 VAC 20 AMP CIRCUIT IN J–BOX MOUNTED TO UNISTRUT ABOVE THE LADDER RACK AND PROVIDED WITH A 7 – FT SO TYPE CORD WITH FEMALE NEMA L6 – 20R RECEPTACLE ON THE END. (BY DIV. 26)
6. DEDICATED 120 VAC 20 AMP CIRCUIT IN J–BOX MOUNTED TO UNISTRUT ABOVE THE LADDER RACK AND PROVIDED WITH A 7 – FT SO TYPE CORD WITH FEMALE NEMA 5 – 20R RECEPTACLE ON THE END. (BY DIV. 26)
7. 20 AMP CIRCUIT WITH QUAD RECEPTACLE NEMA 5–20R FLUSH MOUNTED TO THE FINISHED WALL SURFACE AT 18 – INCHES ABOVE FINISHED FLOOR. OUTLETS SHALL BE SPACED NO FARTHER APART THAN 6 – FEET. MAXIMUM OF (6) PER CIRCUIT. (BY DIV. 26)
8. TYPICAL LIGHTING ORIENTATION, ENSURE THERE IS 50 FOOT CANDLES AT 2 – FEET ABOVE FINISHED FLOOR. (BY DIV. 26)
9. (3) 4 – INCH EMT CONDUIT SLEEVES ABOVE ACCESSIBLE CEILING WITH NYLON BUSHINGS ON EACH END AND SECURED TO WALL. CONDUIT SLEEVES SHALL BE SEALED ON THE EXTERIOR AND INTERIOR TO RETURN THE WALL BACK TO THE ORIGINAL RATING. IF WALL IS NOT RATED CONDUIT SHALL BE SEALED ON THE EXTERIOR AND INTERIOR TO REDUCE NOISE TRAVELING THROUGH THE PENETRATION. CONDUIT SLEEVES SHALL BE USED FOR LOW VOLTAGE DATA VOICE VIDEO AND SECURITY ONLY. (BY DIV. 26)

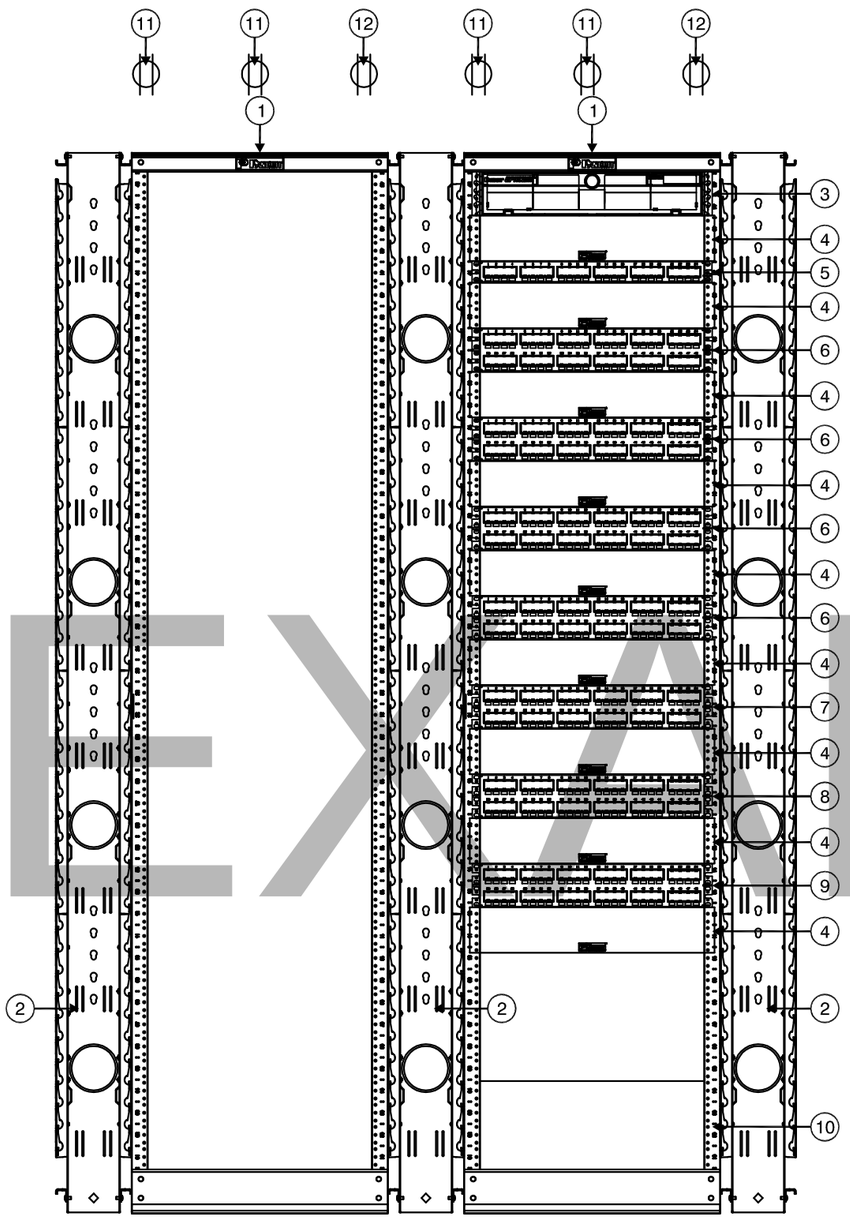

Typical IDF Rack Elevation

1 / xx

SCALE: 1"=1'-0"

TYPICAL IDF ROOM RACK ELEVATION KEYED NOTES

1. 19 – INCH X 84 – INCH EQUIPMENT RACK. (BY DIV. 27)
2. DOUBLE – SIDED VERTICAL CABLE MANAGER. (BY DIV. 27)
3. RACK MOUNTED 48 – PORT FIBER OPTIC ENCLOSURE FOR SINGLE MODE FIBER OPTIC CABLE. (BY DIV. 27)
4. DOUBLE–SIDED HORIZONTAL CABLE MANAGER. (BY DIV. 27)
5. RACK MOUNTED 24 – PORT VOICE PATCH PANEL. (BY DIV. 27)
6. RACK MOUNTED 48 – PORT CATEGORY 6 PATCH PANEL FOR DATA. (BY DIV. 27)
7. RACK MOUNTED 48 – PORT CATEGORY 6 PATCH PANEL FOR WIRELESS ACCESS POINTS. (BY DIV. 27)
8. RACK MOUNTED 48 – PORT CATEGORY 6 PATCH PANEL FOR AUDIO VISUAL SYSTEMS. (BY DIV. 27)
9. RACK MOUNTED 48 – PORT CATEGORY 6 PATCH PANEL FOR IP SECURITY. (BY DIV. 27)
10. (4) RACK MOUNTED UNITS OF SPACE FOR OWNER PROVIDED / OWNER INSTALLED UPS. (BY DIV. 27)
11. DEDICATED 208 VAC 20 AMP CIRCUIT IN J–BOX MOUNTED TO UNISTRUT ABOVE THE LADDER RACK AND PROVIDED WITH A 7 – FT SO TYPE CORD WITH FEMALE NEMA L6 – 20R RECEPTACLE ON THE END. (BY DIV. 26)
12. DEDICATED 120 VAC 20 AMP CIRCUIT IN J–BOX MOUNTED TO UNISTRUT ABOVE THE LADDER RACK AND PROVIDED WITH A 7 – FT SO TYPE CORD WITH FEMALE NEMA 5 – 20R RECEPTACLE ON THE END. (BY DIV. 26)

EXAMPLE

COMBS Consulting Group technology & security
8200 IH-10 West, Ste. 103 Phone : 210-698-7887
San Antonio, Texas 78230

PROJECT NAME:

CITY OF SAN ANTONIO
STRUCTURED CABLING INFRASTRUCTURE STANDARDS

DATE: 03-04-14

SHEET: 6

SCALE: As Shown

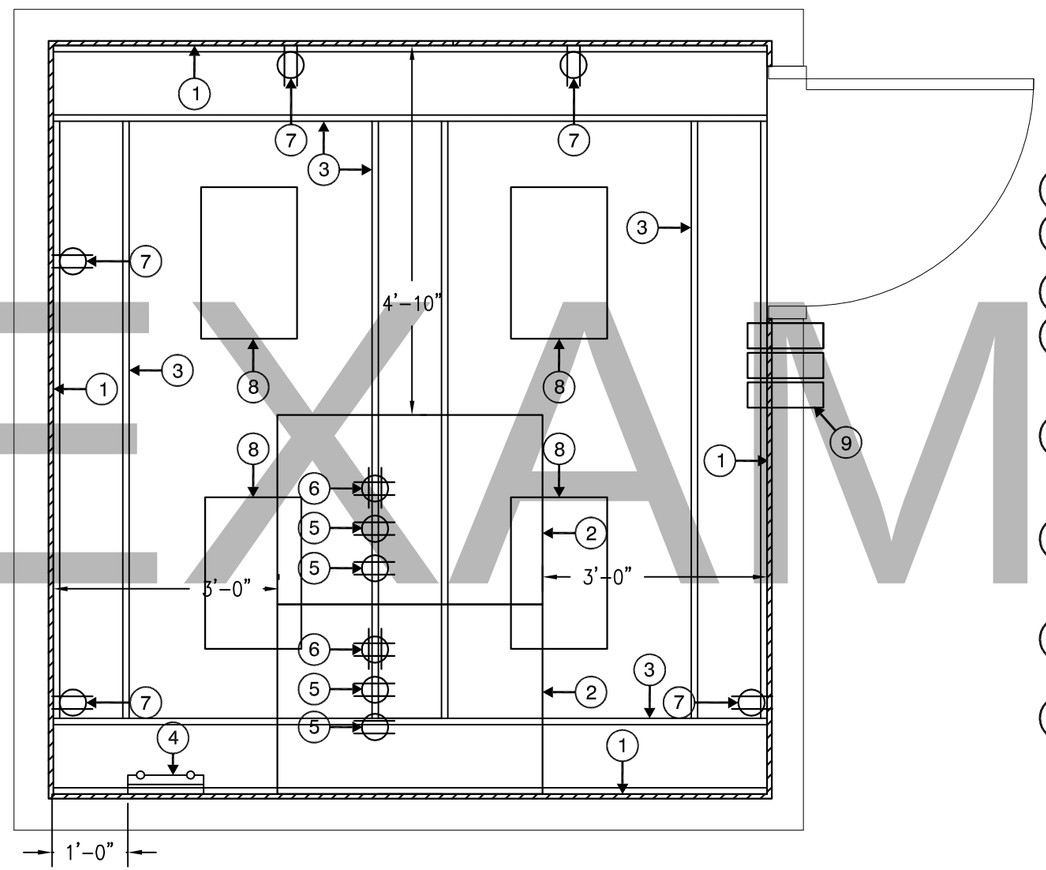

Typical IDF Room Layout With Cabinets

1 / xx

SCALE: 1/2"=1'-0"

TYPICAL IDF ROOM LAYOUT WITH CABINETS KEYED NOTES

1. 4 – FEET X 8 – FEET X 3/4 – INCH AC GRADE VOID FREE FIRE RATED PLYWOOD INSTALLED VERTICALLY STARTING AT 12 – INCHES ABOVE FINISHED FLOOR ON ALL PERIMETER WALLS. THE PLYWOOD SHALL BE INSTALLED WITH THE "A" GRADE SIDE EXPOSED AND THE "C" GRADE SIDE AGAINST THE BUILDING WALL OR STRUCTURE. THE PLYWOOD SHALL BE PAINTED WITH TWO COATS OF FIRE RETARDANT PAINT AND ONE STAMP FROM EACH SHEET SHALL BE MASKED DURING THE PAINTING AND UNCOVERED AFTER THE PAINT HAS DRIED SO THE FIRE RATED PLYWOOD STAMPS ARE VISIBLE FOR INSPECTION. (BY DIV. 27)
2. 27.6 – INCH X 84.6 – INCH TERAFRAME CABINET WITH VERTICAL CABLE MANAGERS. (BY DIV. 27)
3. 12 – INCH LADDER RACK MOUNTED AT 84 – INCHES ABOVE FINISHED FLOOR. (BY DIV. 27)
4. GROUND BUS BAR MOUNTED AT 78 – INCHES ABOVE FINISHED FLOOR. (BY DIV. 27)
5. DEDICATED 208 VAC 20 AMP CIRCUIT IN J–BOX MOUNTED TO UNISTRUT ABOVE THE LADDER RACK AND PROVIDED WITH A 7 – FT SO TYPE CORD WITH FEMALE NEMA L6 – 20R RECEPTACLE ON THE END. (BY DIV. 26)
6. DEDICATED 120 VAC 20 AMP CIRCUIT IN J–BOX MOUNTED TO UNISTRUT ABOVE THE LADDER RACK AND PROVIDED WITH A 7 – FT SO TYPE CORD WITH FEMALE NEMA 5 – 20R RECEPTACLE ON THE END. (BY DIV. 26)
7. 20 AMP CIRCUIT WITH QUAD RECEPTACLE NEMA 5–20R FLUSH MOUNTED TO THE FINISHED WALL SURFACE AT 18 – INCHES ABOVE FINISHED FLOOR. OUTLETS SHALL BE SPACED NO FARTHER APART THAN 6 – FEET. MAXIMUM OF (6) PER CIRCUIT. (BY DIV. 26)
8. TYPICAL LIGHTING ORIENTATION, ENSURE THERE IS 50 FOOT CANDLES AT 2 – FEET ABOVE FINISHED FLOOR. (BY DIV. 26)
9. (3) 4 – INCH EMT CONDUIT SLEEVES ABOVE ACCESSIBLE CEILING WITH NYLON BUSHINGS ON EACH END AND SECURED TO WALL. CONDUIT SLEEVES SHALL BE SEALED ON THE EXTERIOR AND INTERIOR TO RETURN THE WALL BACK TO THE ORIGINAL RATING. IF WALL IS NOT RATED CONDUIT SHALL BE SEALED ON THE EXTERIOR AND INTERIOR TO REDUCE NOISE TRAVELING THROUGH THE PENETRATION. CONDUIT SLEEVES SHALL BE USED FOR LOW VOLTAGE DATA VOICE VIDEO AND SECURITY ONLY. (BY DIV. 26)

EXAMPLE

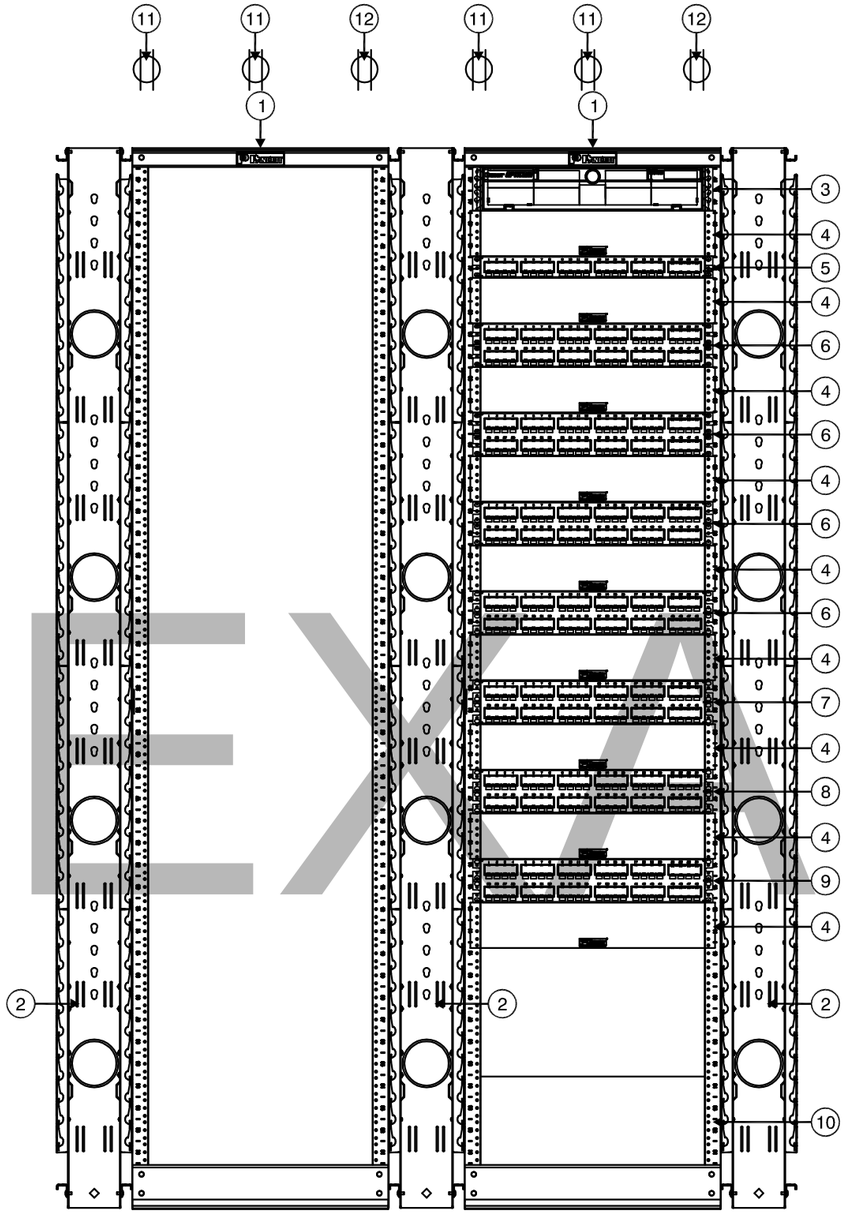

1 / xx

Typical IDF Cabinet Elevation

SCALE: 1"=1'-0"

TYPICAL IDF ROOM CABINET ELEVATION KEYED NOTES

1. 27.6 – INCH X 84.6 – INCH TERAFRAME CABINET. (BY DIV. 27)
2. TERAFRAME DOUBLE – SIDED VERTICAL FINGER CABLE MANAGER. (BY DIV. 27)
3. RACK MOUNTED 48 – PORT FIBER OPTIC ENCLOSURE FOR SINGLE MODE FIBER OPTIC CABLE. (BY DIV. 27)
4. DOUBLE–SIDED HORIZONTAL CABLE MANAGER. (BY DIV. 27)
5. RACK MOUNTED 24 – PORT VOICE PATCH PANEL. (BY DIV. 27)
6. RACK MOUNTED 48 – PORT CATEGORY 6 PATCH PANEL FOR DATA. (BY DIV. 27)
7. RACK MOUNTED 48 – PORT CATEGORY 6 PATCH PANEL FOR WIRELESS ACCESS POINTS. (BY DIV. 27)
8. RACK MOUNTED 48 – PORT CATEGORY 6 PATCH PANEL FOR AUDIO VISUAL SYSTEMS. (BY DIV. 27)
9. RACK MOUNTED 48 – PORT CATEGORY 6 PATCH PANEL FOR IP SECURITY. (BY DIV. 27)
10. (4) RACK MOUNTED UNITS OF SPACE FOR OWNER PROVIDED / OWNER INSTALLED UPS. (BY DIV. 27)
11. DEDICATED 208 VAC 20 AMP CIRCUIT IN J–BOX MOUNTED TO UNISTRUT ABOVE THE LADDER RACK AND PROVIDED WITH A 7 – FT SO TYPE CORD WITH FEMALE NEMA L6 – 20R RECEPTACLE ON THE END. (BY DIV. 26)
12. DEDICATED 120 VAC 20 AMP CIRCUIT IN J–BOX MOUNTED TO UNISTRUT ABOVE THE LADDER RACK AND PROVIDED WITH A 7 – FT SO TYPE CORD WITH FEMALE NEMA 5 – 20R RECEPTACLE ON THE END. (BY DIV. 26)

EXAMPLE

COMBS Consulting Group
Technology & Security
8200 I-10 West, Ste. 103 Phone : 210-698-7887
San Antonio, Texas 78230

PROJECT NAME:

CITY OF SAN ANTONIO
STRUCTURED CABLING INFRASTRUCTURE STANDARDS

DATE: 03-04-14

SHEET: 8

SCALE: As Shown

1 CATEGORY 3 25-PAIR PLENUM

2 ARMORED SINGLE MODE 24-STRAND PLENUM

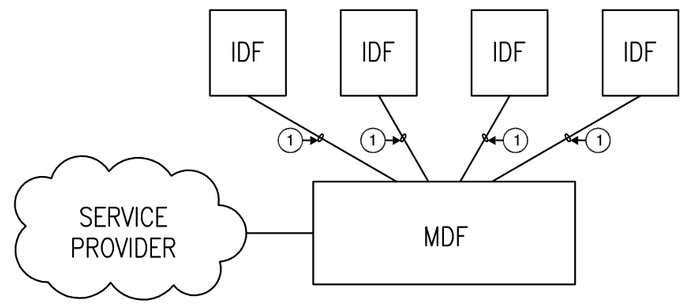

2/xx Single Stand-Alone Building Copper Topology Diagram

SCALE: N.T.S.

EXAMPLE

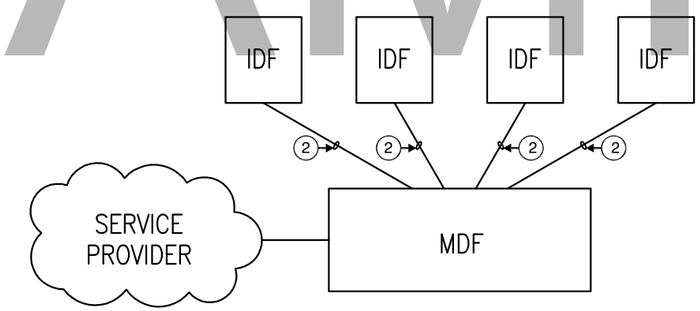

1/xx Single Stand-Alone Building Fiber Topology Diagram

SCALE: N.T.S.

COMBS Consulting Group technology & security
8200 IH-10 West, Ste. 103 Phone : 210-698-7887
San Antonio, Texas 78230

PROJECT NAME:

CITY OF SAN ANTONIO
STRUCTURED CABLING INFRASTRUCTURE STANDARDS

DATE: 03-04-14

SHEET: 9

SCALE: As Shown

1 CATEGORY 3 25-PAIR PLENUM

2 ARMORED SINGLE MODE 24-STRAND PLENUM

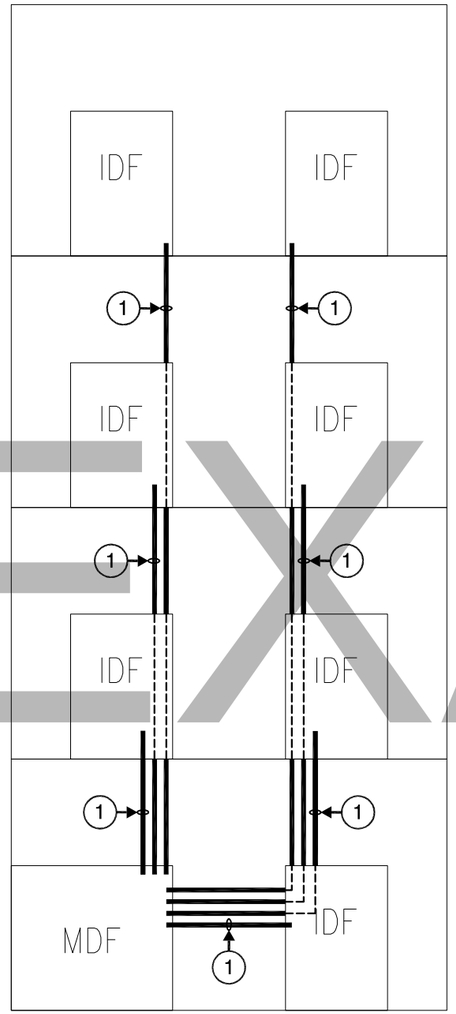

1/xx Single Stand-Alone Building Copper Riser Diagram

SCALE: N.T.S.

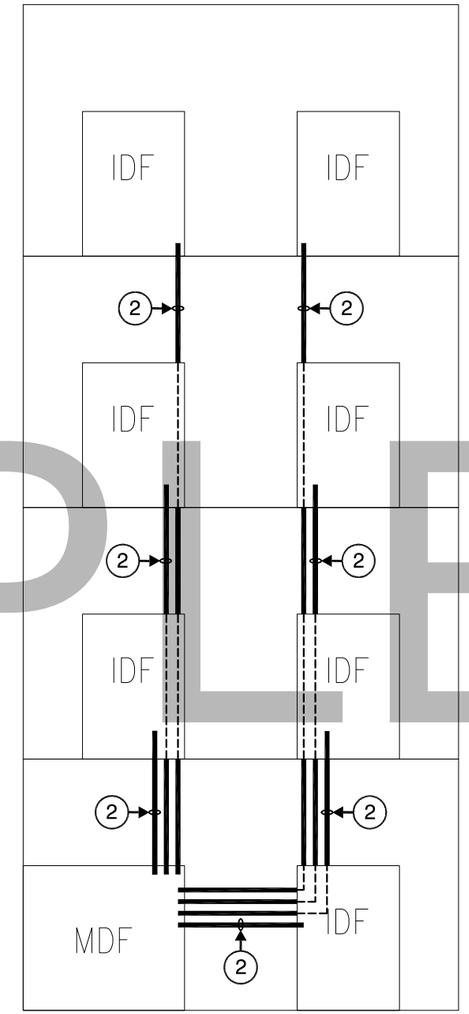

2/xx Single Stand-Alone Building Fiber Riser Diagram

SCALE: N.T.S.

EXAMPLE

COMBS Consulting Group technology & security
8200 I-10 West, Ste. 103 Phone : 210-698-7887
San Antonio, Texas 78230

PROJECT NAME:

CITY OF SAN ANTONIO
STRUCTURED CABLING INFRASTRUCTURE STANDARDS

DATE: 03-04-14

SHEET: 10

SCALE: As Shown

1 CATEGORY 3 25-PAIR OSP

2 CATEGORY 3 25-PAIR PLENUM

3 ARMORED SINGLE MODE 48-STRAND INDOOR/OUTDOOR

4 ARMORED SINGLE MODE 24-STRAND PLENUM

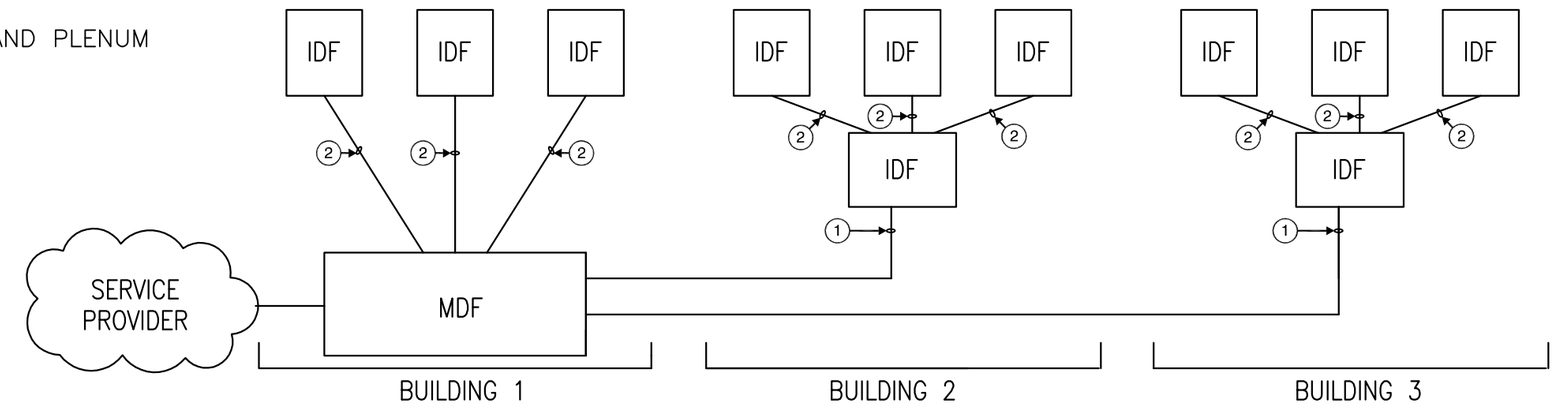

1/xx Campus Copper Topology Diagram

SCALE: N.T.S.

EXAMPLE

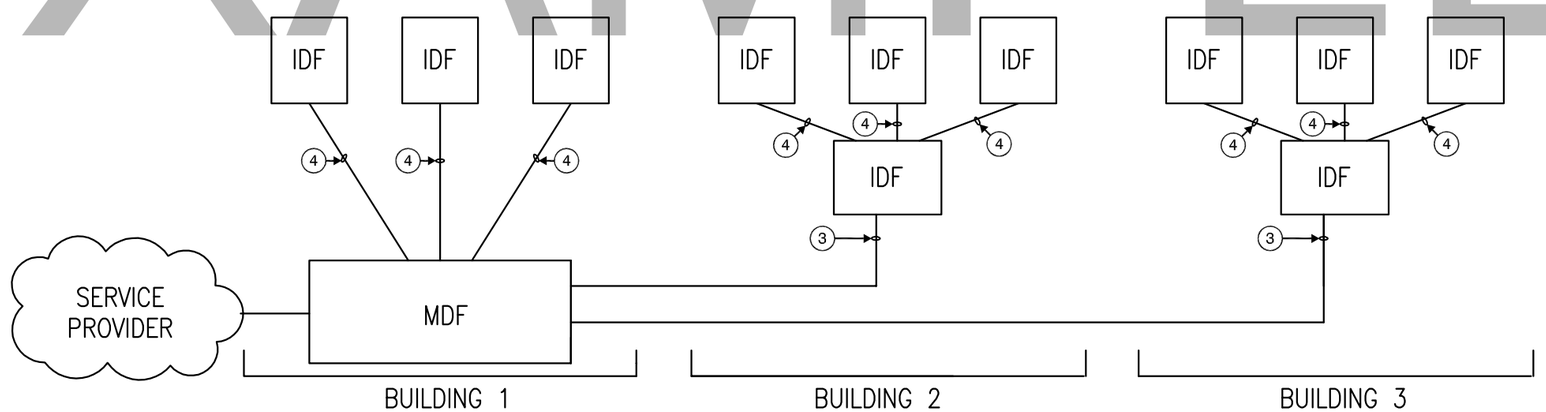

2/xx Campus Fiber Topology Diagram

SCALE: N.T.S.

COMBS Consulting Group technology & security
8200 IH-10 West, Ste. 103 Phone : 210-698-7887
San Antonio, Texas 78230

PROJECT NAME:

CITY OF SAN ANTONIO
STRUCTURED CABLING INFRASTRUCTURE STANDARDS

DATE: 03-04-14

SHEET: 11

SCALE: As Shown

1 CATEGORY 3 25-PAIR OSP

2 CATEGORY 3 25-PAIR PLENUM

3 ARMORED SINGLE MODE 48-STRAND INDOOR/OUTDOOR

4 ARMORED SINGLE MODE 24-STRAND PLENUM

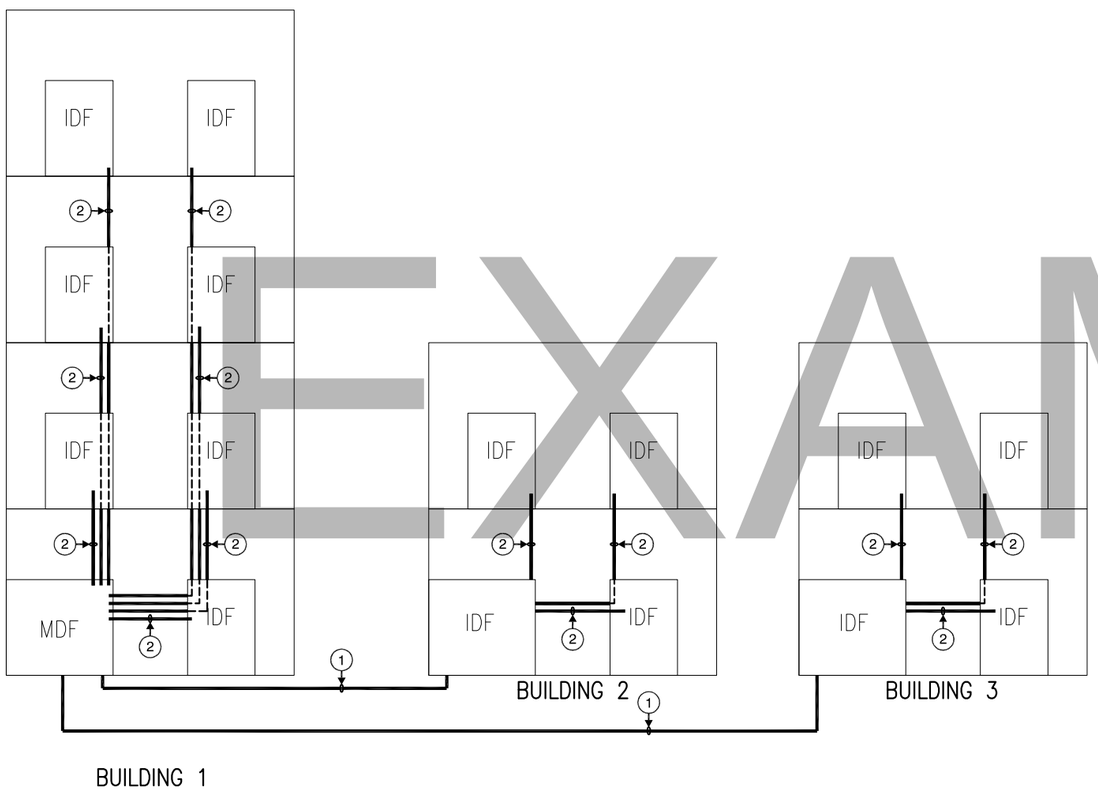

1 / xx Campus Copper Riser Diagram

SCALE: N.T.S.

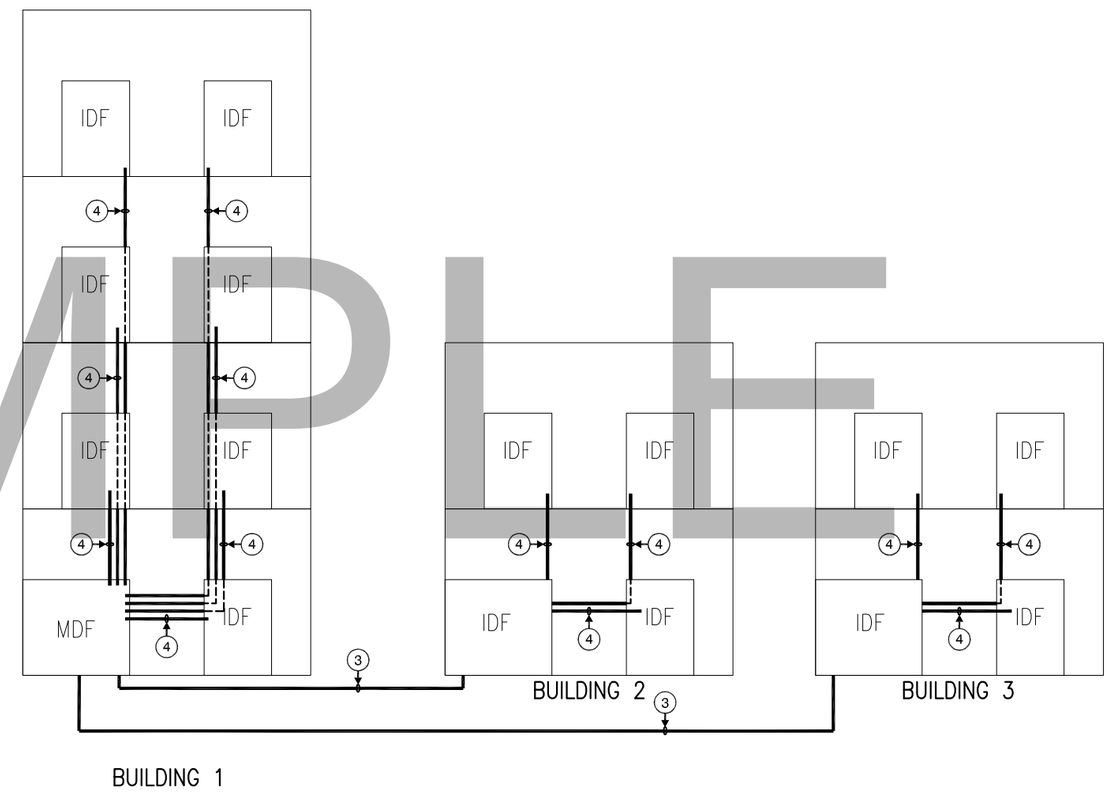

2 / xx Campus Fiber Riser Diagram

SCALE: N.T.S.

EXAMPLE

COMBS Consulting Group technology & security
8200 IH-10 West, Ste. 103 Phone : 210-698-7887
San Antonio, Texas 78230

PROJECT NAME:

CITY OF SAN ANTONIO
STRUCTURED CABLING INFRASTRUCTURE STANDARDS

DATE: 03-04-14

SHEET: 12

SCALE: As Shown

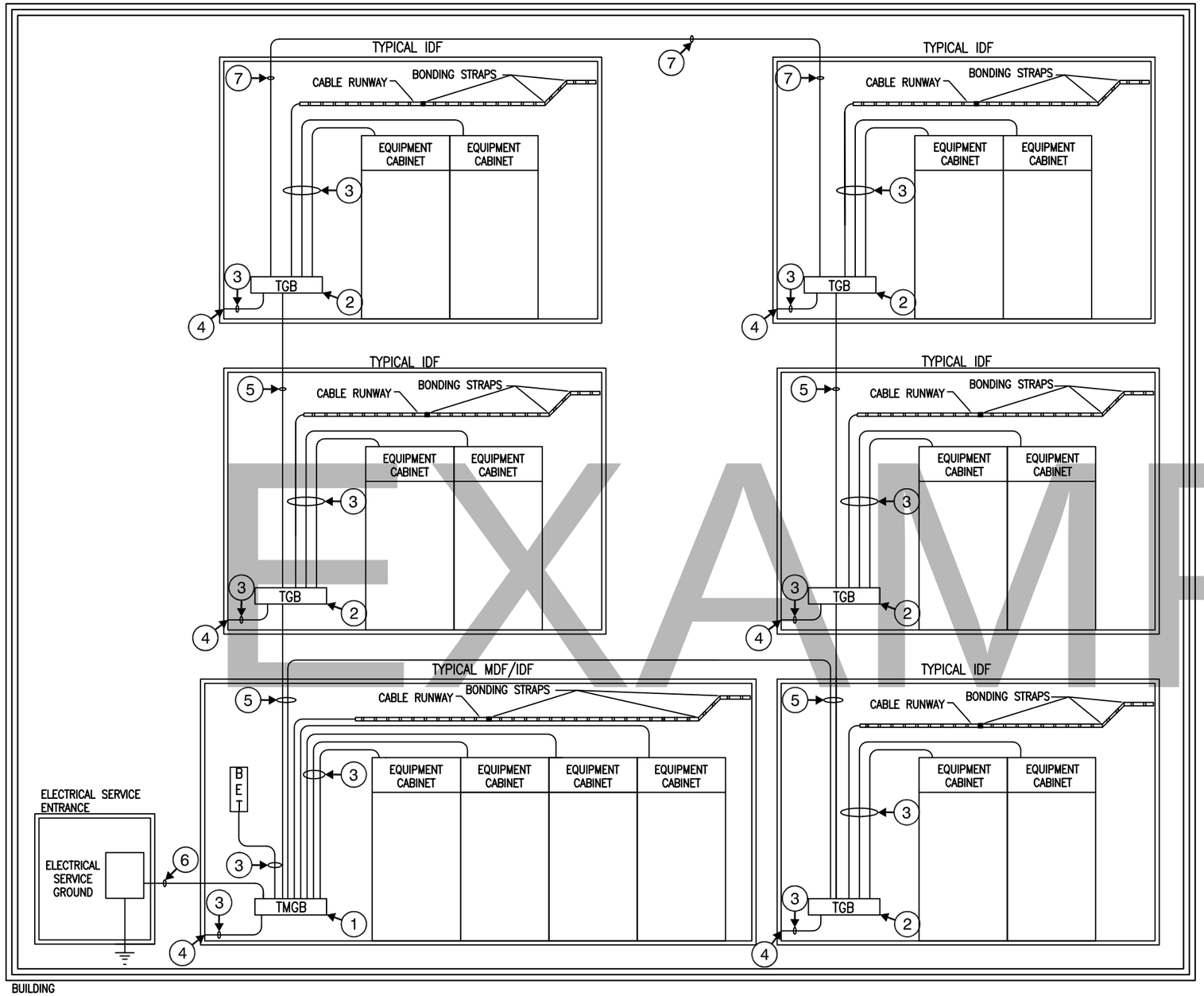

1. TELECOMMUNICATIONS MAIN GROUNDING BUS BAR (TMGB)
2. TELECOMMUNICATIONS GROUNDING BUS BAR (TGB)
3. TELECOMMUNICATIONS BONDING CONDUCTOR (TBC)
4. CONNECT TO GROUNDED BUILDING STEEL WHEN EXPOSED IN ROOM.
5. TELECOMMUNICATIONS BONDING BACKBONE (TBB)
6. TELECOMMUNICATIONS BONDING CONDUCTOR (TBC) BY ELECTRICAL CONTRACTOR
7. GROUNDING EQUALIZER CONDUCTOR (GEC)

TBB/GE linear length m (ft)	TBB/GE size (AWG)
less than 4 (13)	6
4 – 6 (14 – 20)	4
6 – 8 (21 – 26)	3
8 – 10 (27 – 33)	2
10 – 13 (34 – 41)	1
13 – 16 (42 – 52)	1/0
16 – 20 (53 – 66)	2/0
20 – 26 (67 – 84)	3/0
26 – 32 (85 – 105)	4/0
32 – 38 (106 – 125)	250 kcmil
38 – 46 (126 – 150)	300 kcmil
46 – 53 (151 – 175)	350 kcmil
53 – 76 (176 – 250)	500 kcmil
76 – 91 (251 – 300)	600 kcmil
Greater than 91 (301)	750 kcmil

EXAMPLE

1 / xx

Typical Grounding Diagram

SCALE: N.T.S.

COMBS Consulting Group Technology & Security
8200 IH-10 West, Ste. 103 Phone : 210-698-7887
San Antonio, Texas 78230

PROJECT NAME:

CITY OF SAN ANTONIO
STRUCTURED CABLING INFRASTRUCTURE STANDARDS

DATE: 03-04-14

SHEET: 13

SCALE: As Shown

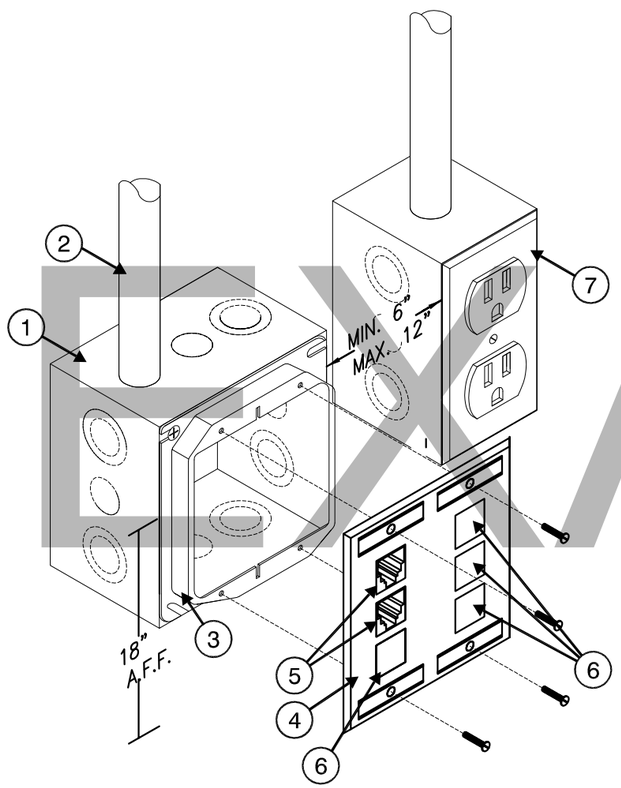

1. 4 11/16" x 4 11/16" x 2 1/8" RECESSED DOUBLE GANG BOX (BY DIV 26)
2. 1–INCH EMT CONDUIT FROM DOUBLE GANG BOX WITH 200 LBS PULL STRING AND NYLON BUSHING STUBBED OUT ABOVE ACCESSIBLE CEILING (BY DIV 26)
3. DOUBLE GANG PLASTER RING (BY DIV 26)
4. DOUBLE GANG WALL PLATE WITH DESIGNATION IN WINDOW (BY DIV 27)
5. DATA INSERT (BY DIV 27)
6. BLANK INSERT (BY DIV 27)
7. ELECTRICAL RECEPTACLE, GANG BOX AND CONDUIT SHOWN FOR REFERENCE ONLY (REFER TO DIV 26)

EXAMPLE

1/xx TYPCIAL OFFICE WORKSTATION CONFIGURATION

SCALE: N.T.S.

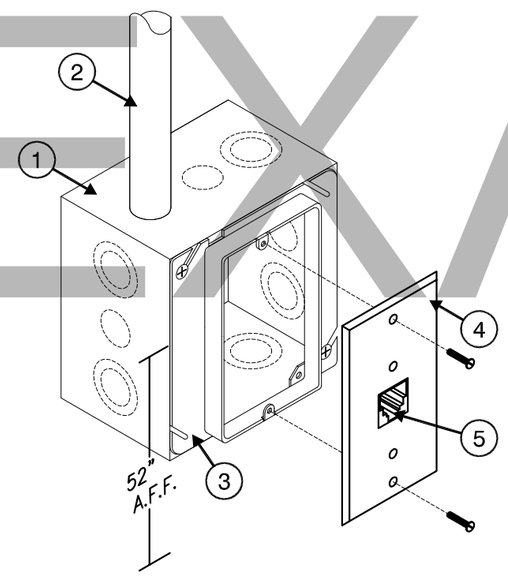

1. 4 11/16" x 4 11/16" x 2 1/8" RECESSED DOUBLE GANG BOX (BY DIV 26)
2. 1–INCH EMT CONDUIT FROM DOUBLE GANG BOX WITH 200 LBS PULL STRING AND NYLON BUSHING STUBBED OUT ABOVE ACCESSIBLE CEILING (BY DIV 26)
3. SINGLE GANG PLASTER RING (BY DIV 26)
4. SINGLE GANG WALL PLATE (BY DIV 27)
5. DATA INSERT (BY DIV 27)

EXAMPLE

1 / XX

TYPCIAL WALL PHONE CONFIGURATION

SCALE: N.T.S.

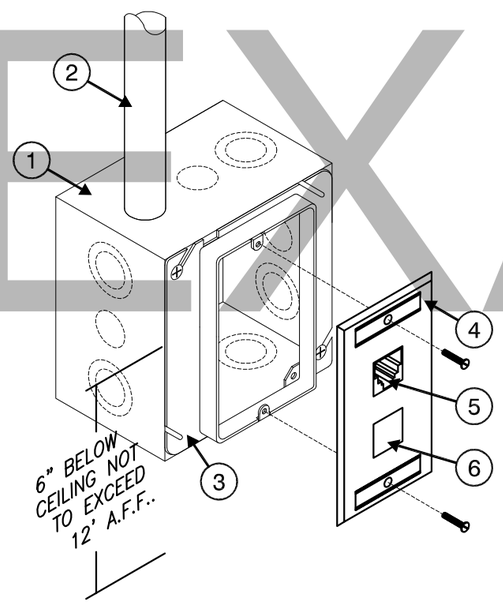

1. 4 11/16" x 4 11/16" x 2 1/8" RECESSED DOUBLE GANG BOX (BY DIV 26)
2. 1–INCH EMT CONDUIT FROM DOUBLE GANG BOX WITH 200 LBS PULL STRING AND NYLON BUSHING STUBBED OUT ABOVE ACCESSIBLE CEILING (BY DIV 26)
3. SINGLE GANG PLASTER RING (BY DIV 26)
4. SINGLE GANG WALL PLATE (BY DIV 27)
5. DATA INSERT (BY DIV 27)
6. BLANK INSERT (BY DIV 27)

EXAMPLE

1/xx TYPICAL WALL MOUNTED IP CAMERA/WIRELESS ACCESS POINT CONFIGURATION

SCALE: N.T.S.

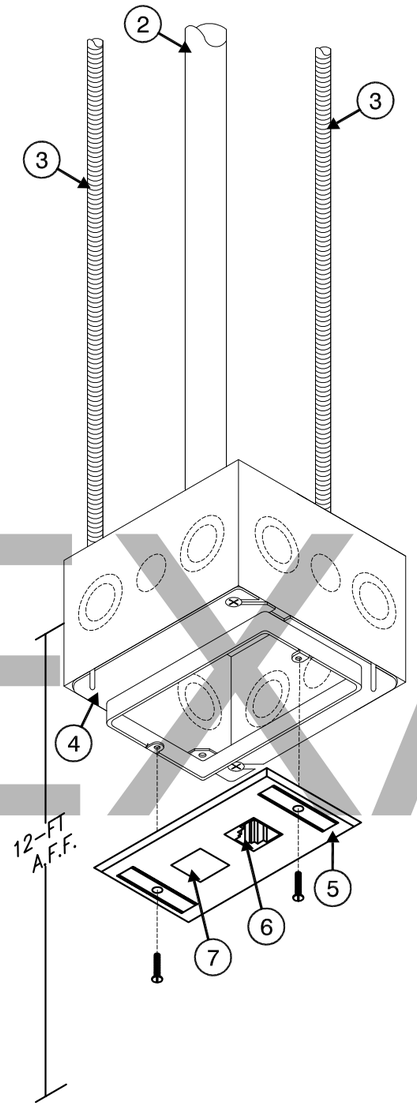

1. 4 11/16" x 4 11/16" x 2 1/8" RECESSED DOUBLE GANG BOX (BY DIV 26)
2. 1-INCH EMT CONDUIT FROM DOUBLE GANG BOX WITH 200 LBS PULL STRING AND NYLON BUSHING STUBBED OUT AT BUILDING STRUCTURE (BY DIV 26)
3. ALL THREAD TO BUILDING STRUCTURE.
4. SINGLE GANG PLASTER RING (BY DIV 26)
5. SINGLE GANG WALL PLATE (BY DIV 27)
6. DATA INSERT (BY DIV 27)
7. BLANK INSERT (BY DIV 27)

EXAMPLE

1/xx TYPICAL STRUCTURE MOUNTED IP CAMERA/WIRELESS ACCESS POINT CONFIGURATION

SCALE: N.T.S.

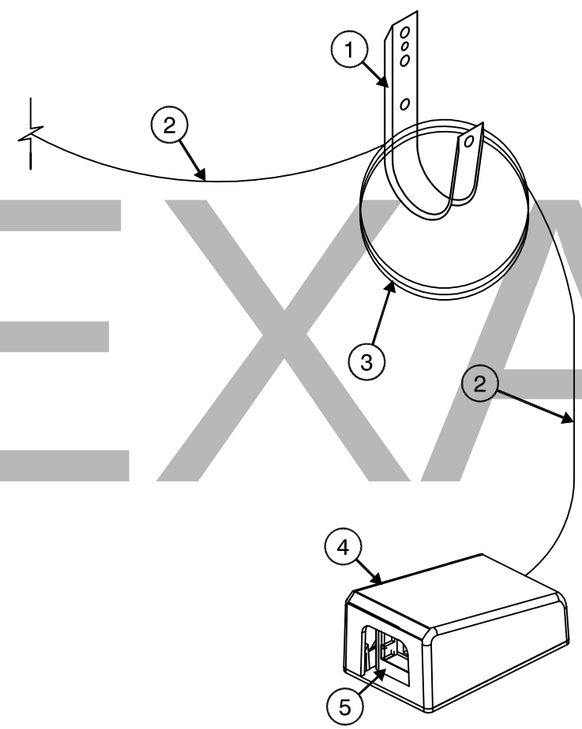

1. J–HOOK ABOVE ACCESSIBLE CEILING (BY DIV 27)
2. DATA CABLE ABOVE ACCESSIBLE CEILING (BY DIV 27)
3. 20–FEET SERVICE LOOP ABOVE ACCESSIBLE CEILING NEATLY COILED AND SECURED TO J–HOOK (BY DIV 27)
4. SURFACE MOUNT BOX ABOVE ACCESSIBLE CEILING AND SECURED TO BUILDING STRUCTURE. (BY DIV 27)
5. DATA INSERT (BY DIV 27)

EXAMPLE

1/xx TYPICAL ABOVE ACCESSIBLE CEILING DATA OUTLET

SCALE: N.T.S.

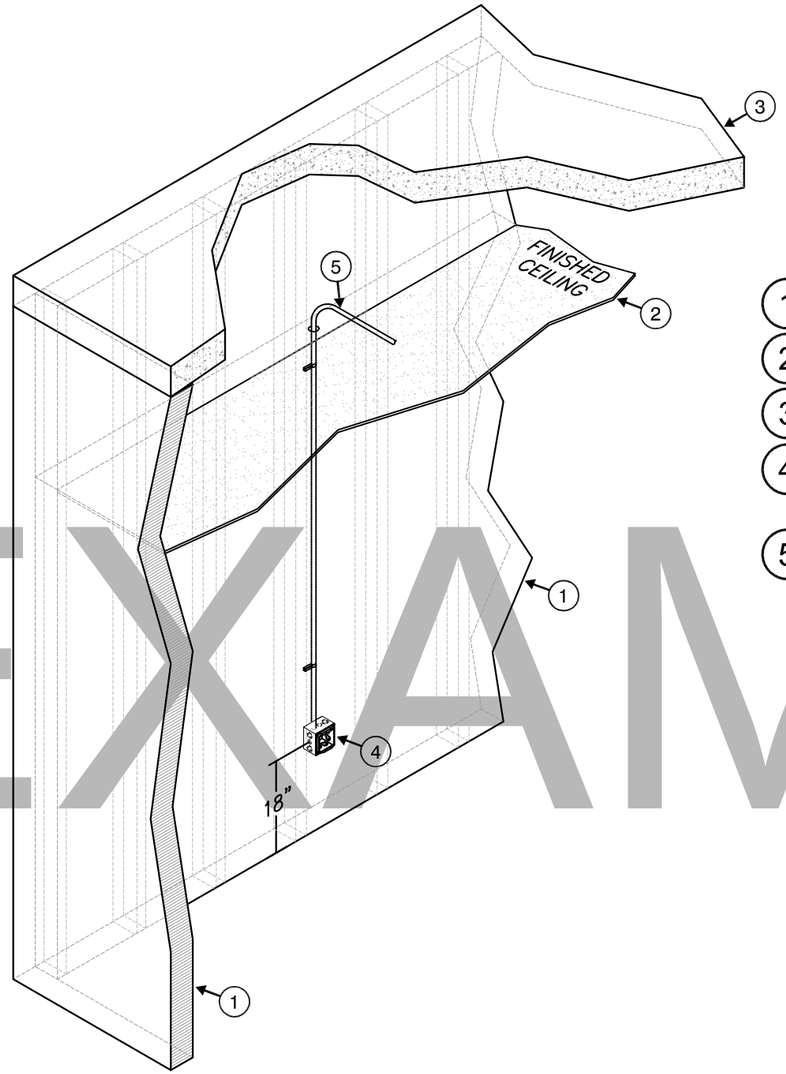

KEYED NOTES:

1. SCHEDULED WALL.
2. SCHEDULED CEILING.
3. SCHEDULED DECK ABOVE.
4. 4 11/16" x 4 11/16" x 2 1/8" RECESSED DOUBLE GANG BOX WITH DOUBLE GANG PLASTER RING (BY DIV 26)
5. 1-INCH EMT CONDUIT FROM DOUBLE GANG BOX WITH 200 LBS PULL STRING AND NYLON BUSHING STUBBED OUT ABOVE ACCESSIBLE CEILING IN THE SAME ROOM WHERE THE DEVICE IS LOCATED. IF THE ROOM WHERE THE DEVICE IS LOCATED DOES NOT HAVE AN ACCESSIBLE CEILING, THE CONDUIT SHALL ROUTE TO THE NEAREST ACCESSIBLE CEILING OFF OF A MAIN CORRIDOR. CONDUIT PATHWAY SHALL TAKE THE SHORTEST ROUTE TO THE APPLICABLE MDF/IDF ROOM TO MINIMIZE THE CABLE LENGTH. (BY DIV 26)

EXAMPLE

1 / xx

TYPICAL TECHNOLOGY CONDUIT ROUGH-IN

SCALE: N.T.S.

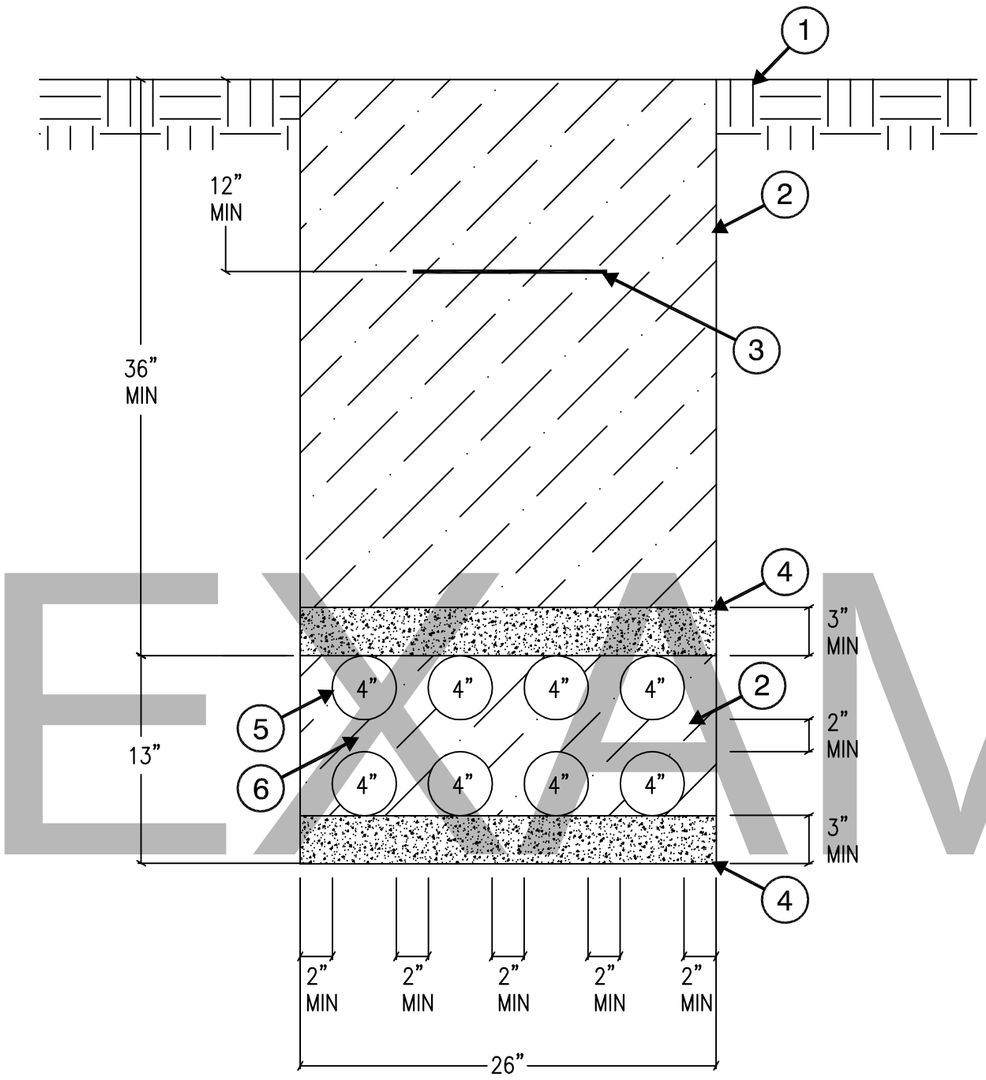

1. FINISHED GRADE
2. SELECT COMPACTED BACKFILL
3. DETECTABLE WARNING TAPE
4. COMPACTED SAND
5. COMMUNICATIONS CONDUIT
6. DUCT SPACERS (TYPICAL BETWEEN ALL CONDUITS)

EXAMPLE

1/xx TYPICAL COMMUNICATIONS DUCT BANK DETAIL - (8) 4-INCH CONDUITS

SCALE: N.T.S.

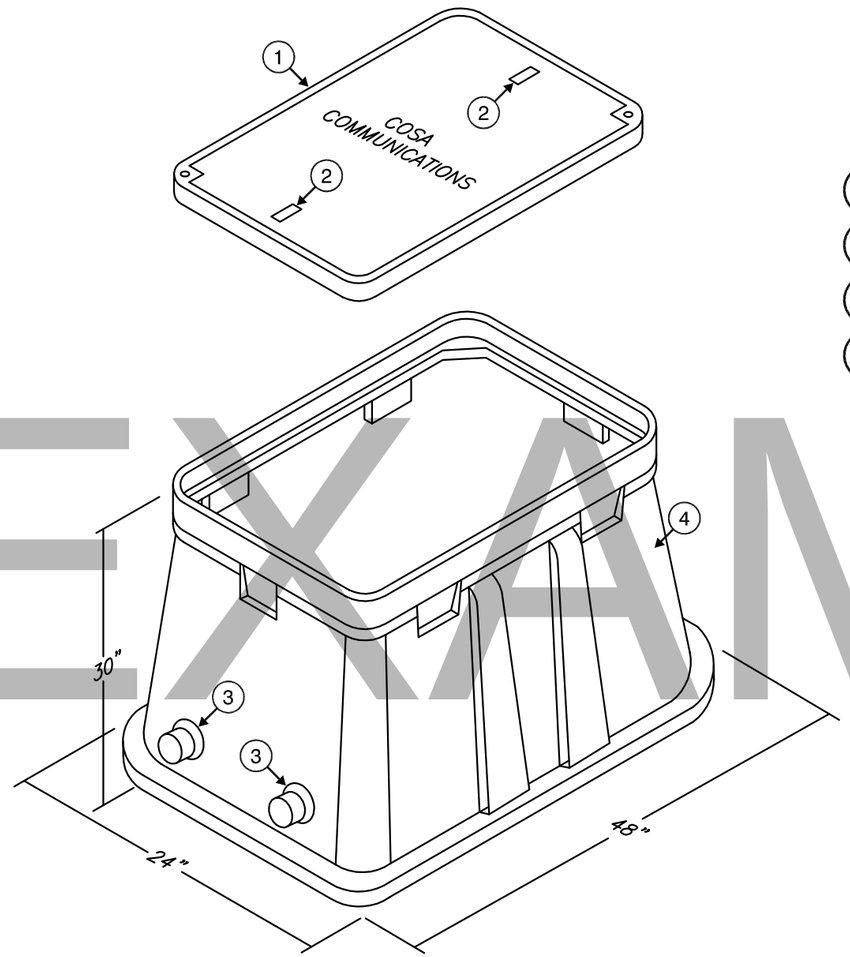

KEYED NOTES:

1. 40-INCH X 18-INCH H20 COVER.
2. LIFTING EYE.
3. 4-INCH TERMINATOR.
4. 48-INCH LONG X 24-INCH WIDE X 30-INCH DEEP H20 RATED HANDHOLE.

EXAMPLE

1
xx

TYPICAL TECHNOLOGY HANDHOLES (HH)

SCALE: N.T.S.

COMBS Consulting Group technology & security
8200 IH-10 West, Ste. 103 Phone : 210-698-7887
San Antonio, Texas 78230

PROJECT NAME:

CITY OF SAN ANTONIO
STRUCTURED CABLING INFRASTRUCTURE STANDARDS

DATE: 03-04-14

SHEET: 21

SCALE: As Shown

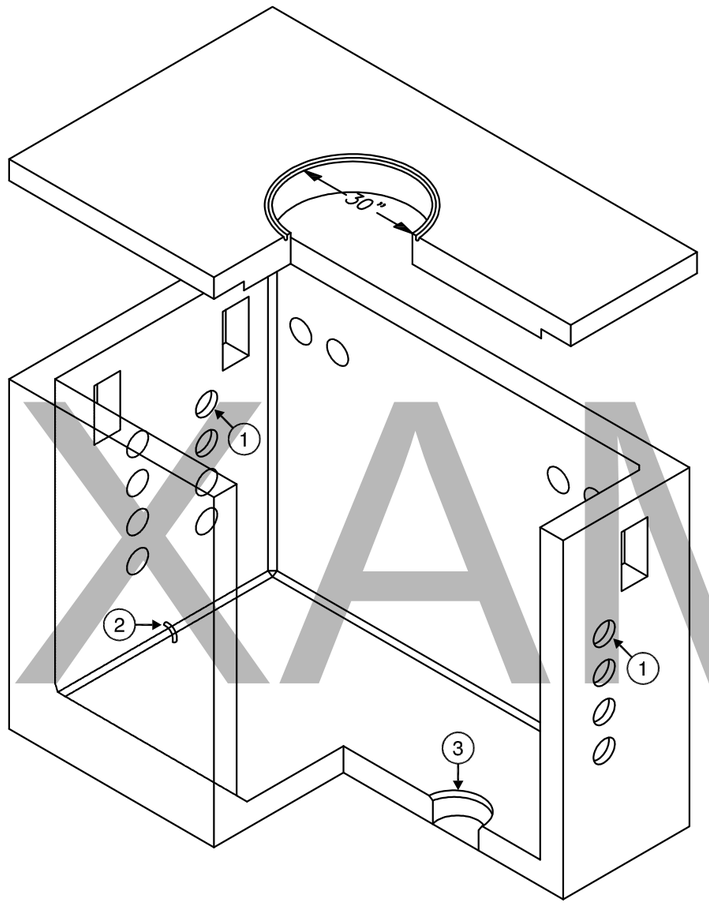

KEYED NOTES:

1. PRE CAST 4-INCH TERMINATORS.
2. PULLING EYES (ONE AT EACH END).
3. 13-INCH SUMP WITH GRATE.

EXAMPLE

1 / xx

TYPICAL TECHNOLOGY MAINTENANCE HOLES (MH)

SCALE: N.T.S.

COMBS Consulting Group technology & security
8200 IH-10 West, Ste. 103 Phone : 210-698-7887
San Antonio, Texas 78230

PROJECT NAME:

CITY OF SAN ANTONIO
STRUCTURED CABLING INFRASTRUCTURE STANDARDS

DATE: 03-04-14

SHEET: 22

SCALE: As Shown

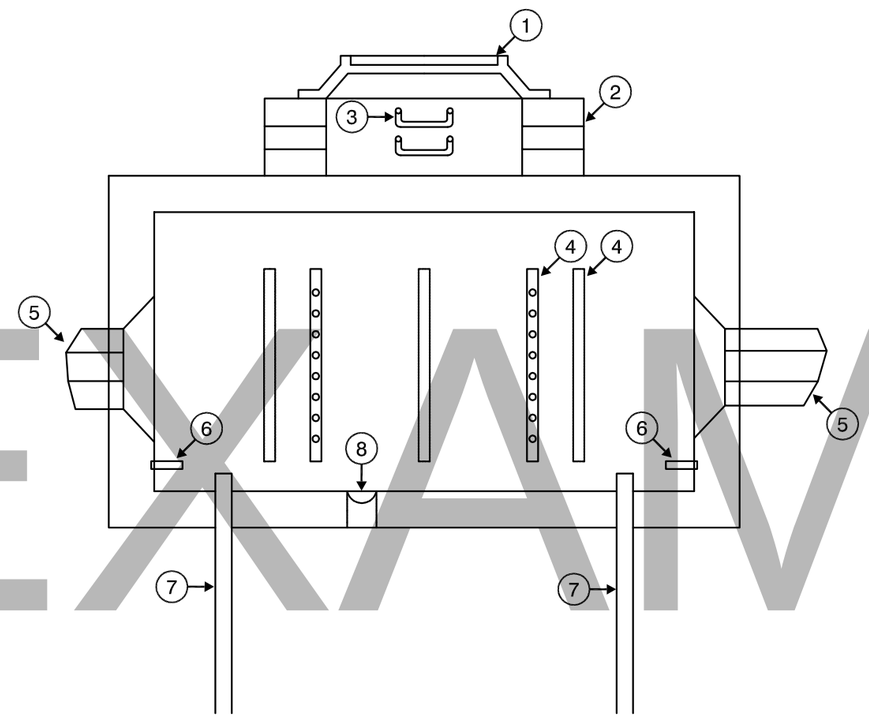

KEYED NOTES:

1. H-2O RATED COVER.
2. PRE CAST COLLAR.
3. STEPS (AS REQUIRED).
4. CABLE RACKS.
5. 4-INCH DUCTS.
6. PULLING EYES.
7. 3/4-INCH X 10-FT. GROUND ROD.
8. 13-INCH SUMP WITH GRATE.

EXAMPLE

1 / xx

TYPICAL TECHNOLOGY MAINTENANCE HOLES (MH)

SCALE: N.T.S.

COMBS Consulting Group technology & security
8200 IH-10 West, Ste. 103 Phone : 210-698-7887
San Antonio, Texas 78230

PROJECT NAME:

CITY OF SAN ANTONIO
STRUCTURED CABLING INFRASTRUCTURE STANDARDS

DATE: 03-04-14

SHEET: 23

SCALE: As Shown

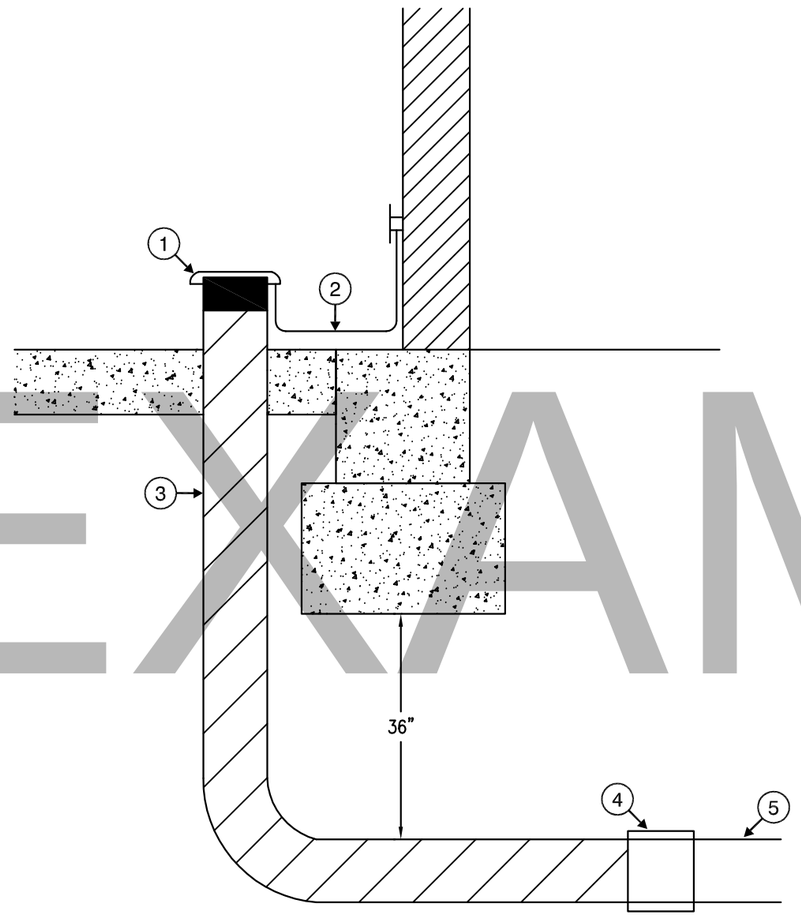

KEYED NOTES:

1. GROUNDING BUSHING.
2. #6 GROUND WIRE TO TMGB/TGB.
3. 4-INCH RIGID STEEL CONDUIT WRAPPED WITH PASCO PROTECTIVE TAPE SYSTEM.
4. PVC FEMALE ADAPTER.
5. SCHEDULE 40 PVC.

EXAMPLE

1 / xx

TYPICAL TECHNOLOGY DUCT ENTRY INTO BUILDING

SCALE: N.T.S.

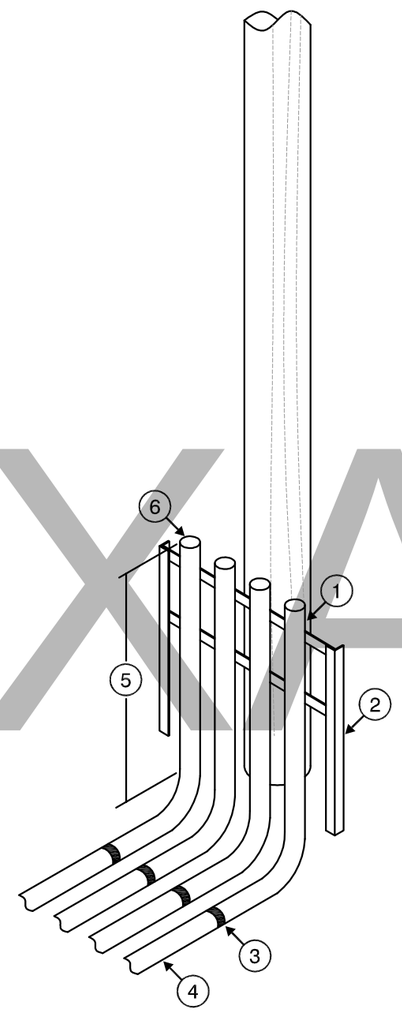

KEYED NOTES:

1. 4-INCH RIGID STEEL CONDUIT WRAPPED WITH PASCO PROTECTIVE TAPE SYSTEM.
2. UNISTRUT RACKING CONSTRUCTED IN FIELD.
3. PVC FEMALE ADAPTER.
4. 4-INCH SCHEDULE 40 PVC CONDUIT.
5. 4-INCH RIGID STEEL CONDUIT SHALL BE EXTENDED 36 INCHES ABOVE GRADE.
6. CONDUITS SHALL BE CAPPED AND SEALED TO PREVENT MOISTURE AND DEBRIS FROM ENTERING CONDUITS.

EXAMPLE

1/xx TYPICAL POLE RISER

SCALE: N.T.S.

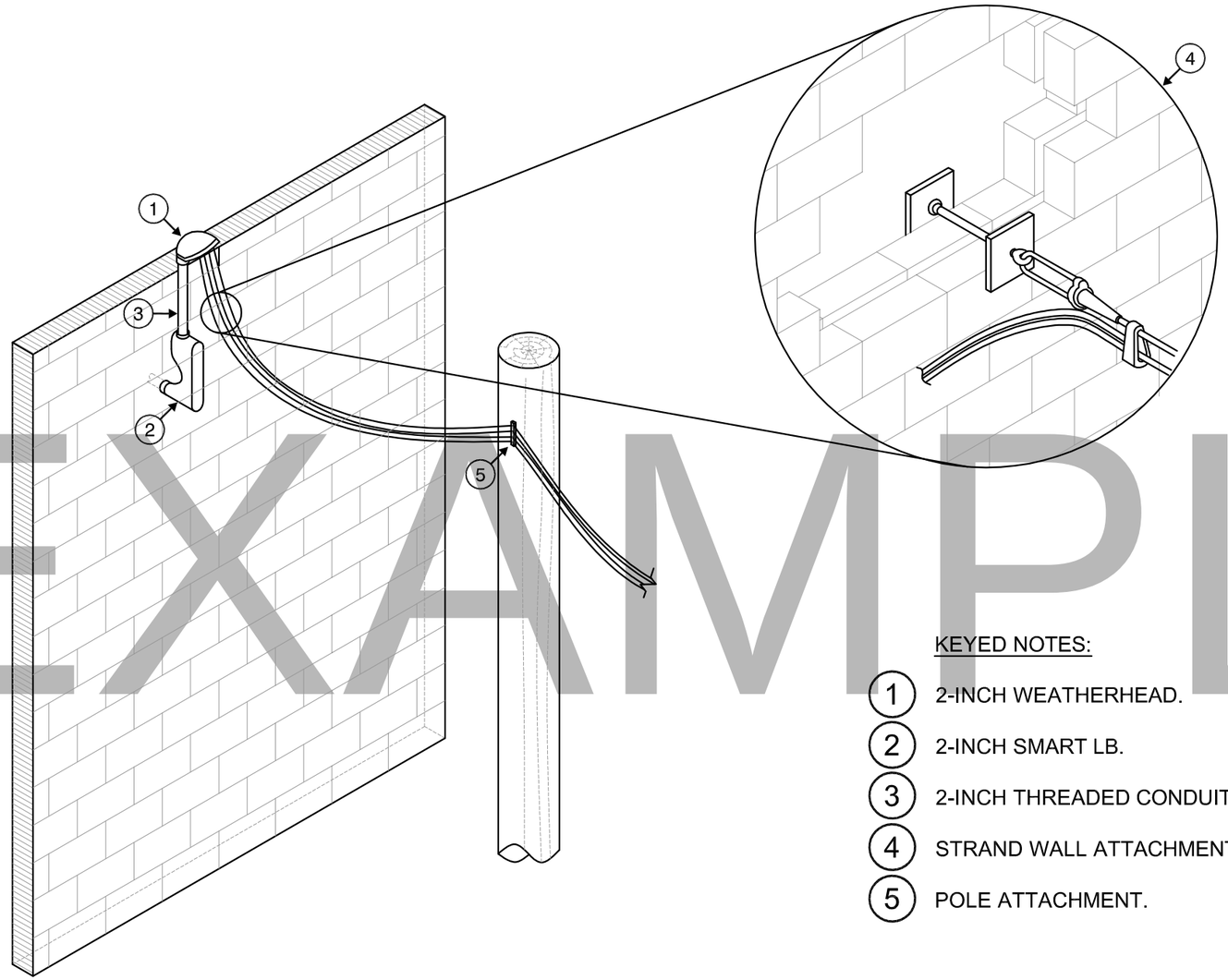

EXAMPLE

KEYED NOTES:

1. 2-INCH WEATHERHEAD.
2. 2-INCH SMART LB.
3. 2-INCH THREADED CONDUIT.
4. STRAND WALL ATTACHMENT.
5. POLE ATTACHMENT.

1 / xx

TYPICAL AERIAL BUILDING ENTRANCE

SCALE: N.T.S.

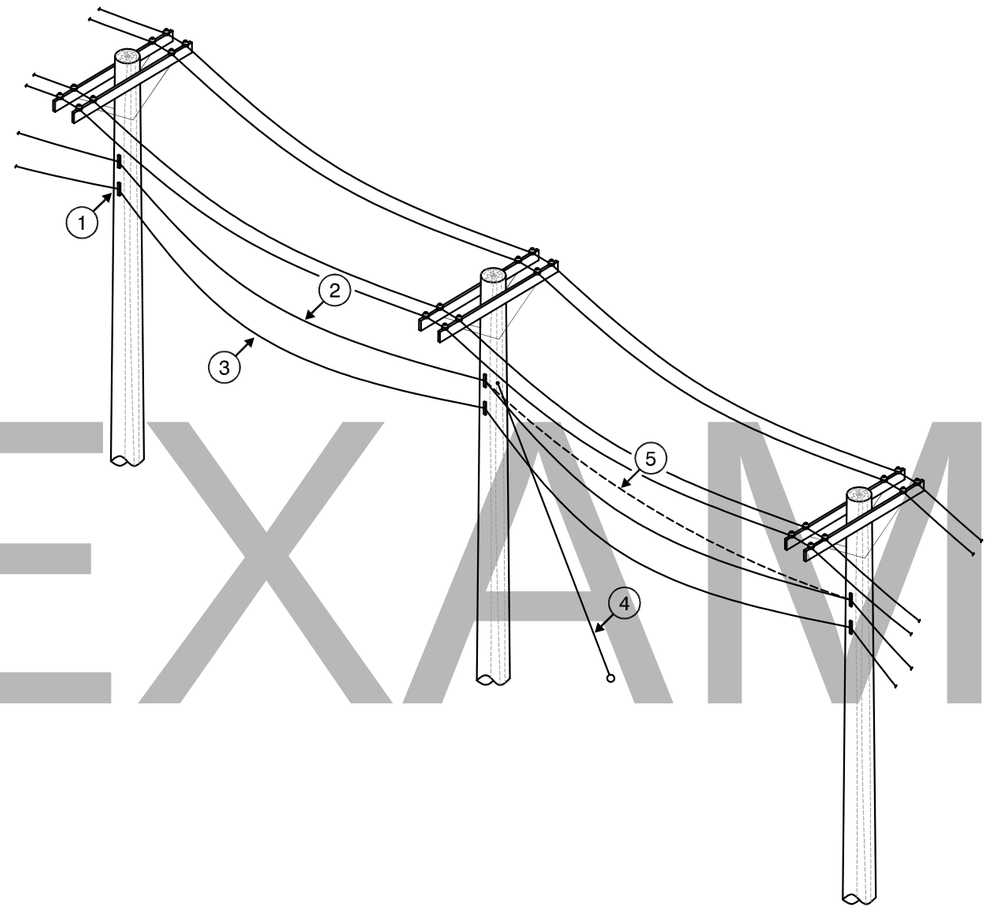

KEYED NOTES:

1. TYPICAL POLE ATTACHMENT.
2. FIBER LASHED TO MESSENGER.
3. COPPER LASHED TO MESSENGER.
4. DOWN-GUY AS REQUIRED BY POLE OWNER.
5. CABLE SAG CALCULATED ON SPAN LENGTH AND CABLE TYPE.

EXAMPLE

1/XX

TYPICAL AERIAL SPAN

SCALE: N.T.S.

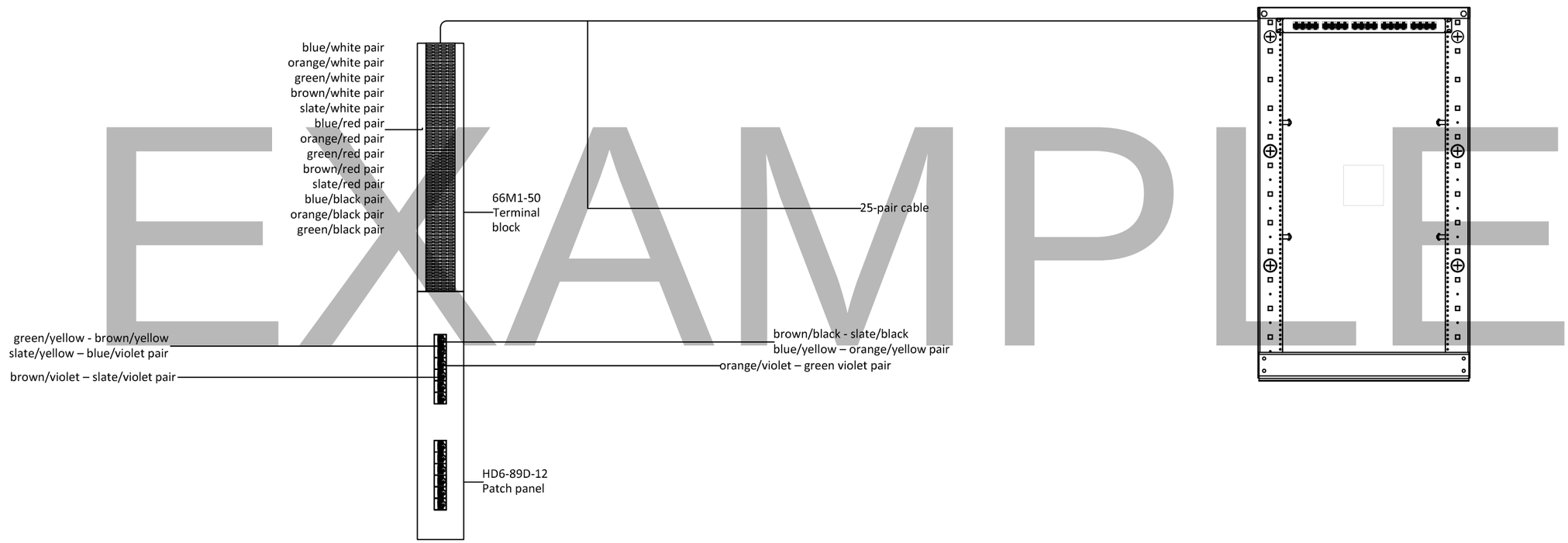

EXAMPLE

1
XX

TYPICAL TELCO DEMARCATION CABLE TERMINATION DETAIL

SCALE: N.T.S.

COMBS Consulting Group
Technology & security
8200 IH-10 West, Ste. 103 Phone : 210-698-7887
San Antonio, Texas 78230

PROJECT NAME:

CITY OF SAN ANTONIO
STRUCTURED CABLING INFRASTRUCTURE STANDARDS

DATE: 03-04-14

SHEET: 28

SCALE: As Shown

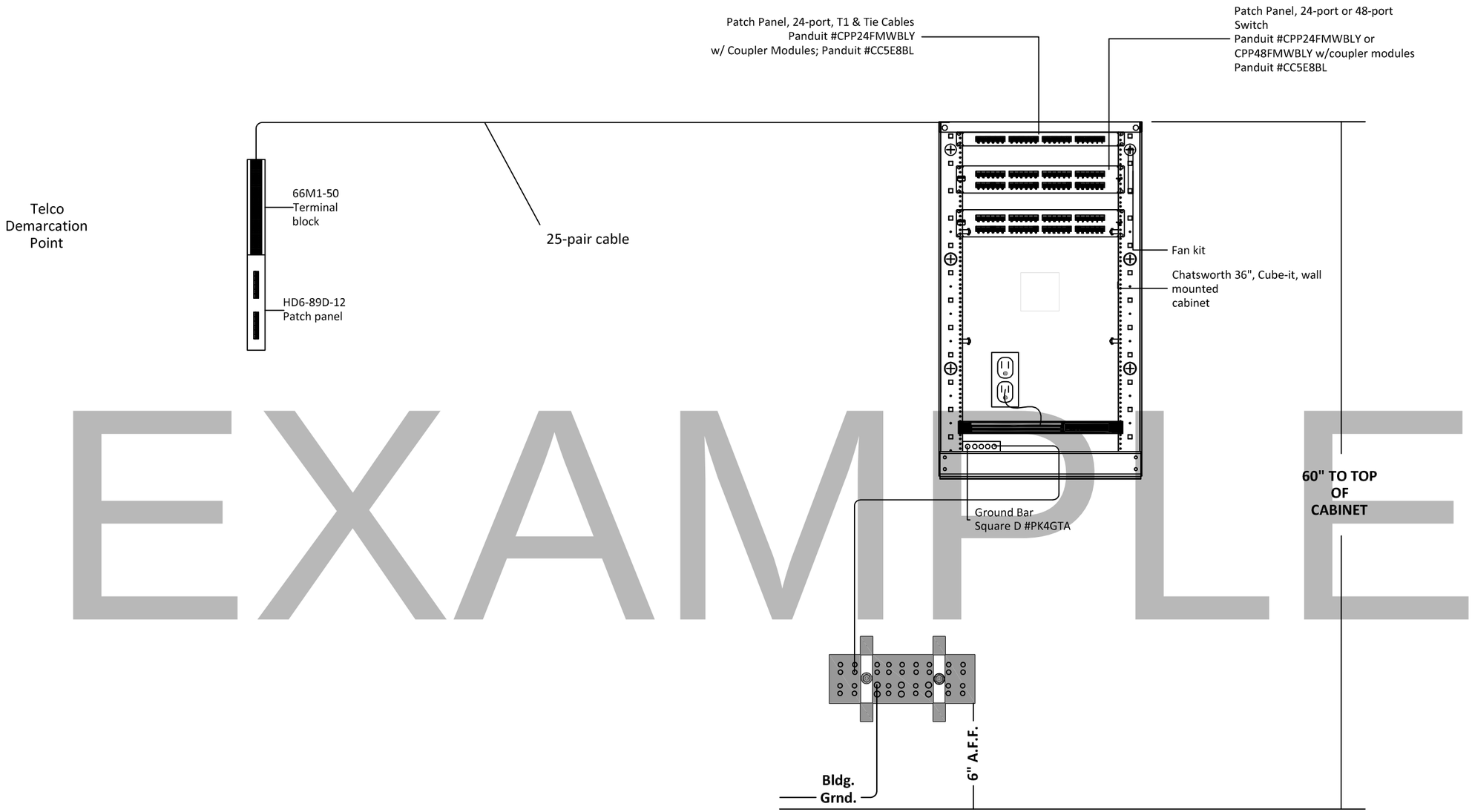

EXAMPLE

1
xx

TYPICAL CHATSWORTH CUBE-IT INSTALLATION

SCALE: N.T.S.

City of San Antonio

Physical Security System Infrastructure Guideline

ITSD – Physical Security
210-207-1027

Version: 20140324

City of San Antonio

Physical Security System Infrastructure Guideline

For

New Facility Construction or Renovations

Version 2014.03.14

Prepared By:

8200 IH-10 West, Suite 130
San Antonio, Texas 78230
Voice: 210-698-7889
Web: www.Combs-Group.com

REVISION LOG

REVISION LOG				UPDATE WITH EACH PUBLICATION	
VERSION	**TITLE**	**OWNER**	**Director**	**SUMMARY OF CHANGES FROM PREVIOUS VERSIONS**	**DATE PUBLISHED**
2013.08.01	Physical Security System Infrastructure Standards	Information Technology Services Department	Derek Rabey	Original Draft	2013-08-01
2014.03.04	Physical Security System Infrastructure Standards	Information Technology Services Department	Derek Rabey	Revised Draft to Incorporate Client Comments	2014-03-04
2014.03.11	Physical Security System Infrastructure Guideline	Information Technology Services Department	Derek Rabey	Revised Draft to Incorporate Client Comments	2014-03-11
2014.03.14	Physical Security System Infrastructure Guideline	Information Technology Services Department	Derek Rabey	Revised Draft to Incorporate Client Comments into Final	2014-03-14

TABLE OF CONTENTS

PART 1 - DOCUMENT PURPOSE 5

PART 2 - DOCUMENT HISTORY 6

PART 3 - ASSET VALUE, THREAT HAZARD, VULNERABILITY, AND RISK ASSESSMENT.....6

PART 4 - SECURITY DESIGN CRITERIA 6

PART 5 - INDUSTRY STANDARDS 8

PART 6 - CONTRACTOR QUALIFICATIONS.....8

PART 7 - WARRANTY ON PARTS AND LABOR. 8

PART 8 - ACRONYM DEFINITIONS.....9

PART 9 - CITY OF SAN ANTONIO SECURITY SYSTEM STANDARDS.....9

PART 10 - SUMMARY OF STANDARDS 27

PART 11 - EXHIBITS.....27

DOCUMENT PURPOSE

1.01 The City of San Antonio Physical Security System Infrastructure Guideline document is a guideline for physical security systems infrastructure and the associated spaces to be applied by the design team for new or renovated facilities. Information herein is applicable to the Physical Security Consultant, IT Consultant, Architect, MEP, and contractors, and shall be taken into account for each project by all team members.

A. The guideline sets forth parameters for the technical system in addition to the site and building requirements to facilitate a properly-installed standards-compliant physical security system infrastructure, organized as follows;

1. Physical Security Concepts, Assessment Recommendations, Industry Standards,

2. System Design Standards; Physical Security System Equipment, Rough-in and Conduit, Cabling, Grounding, Labeling, Testing, and As-Built Documentation.

3. Physical Security System Diagrams

1.02 This guideline applies to three separate electronic systems that make up the overall Physical Security System for the City of San Antonio. These systems are Access Control, Intrusion Detection and Video Surveillance.

1.03 All data network cabling is addressed under “Structured Cabling Infrastructure Guideline”. All physical security cabling from field device and control panel is addressed within this document.

1.04 The guideline addresses physical security systems for typical buildings.

1.05 Designers shall not deviate from this guideline without explicit written approval from the owner.

1.06 Any deviations shall immediately be brought to the attention of the owner’s representative in writing for resolution.

1.07 Where specific product brands are mentioned, an equivalent will be considered following an official submission of product literature and written acceptance by the City of San Antonio Information Technology Services Department.

1.08 Where means, methods, and best practices are mentioned, contractor shall follow the manufacturers’ and owner’s requirements, industry standards, or code, which ever is most stringent.

1.09 Basic contractor qualifications are set forth, but may be made more stringent as applicable to each project based upon size and scope.

DOCUMENT HISTORY

1.10 This document supersedes all previous guidelines which have been fully reevaluated and described herein by the City of San Antonio Information Technology Services Department.

1.11 The contents of the guideline were derived by the assembly and input from the City of San Antonio Information Technology Services Department.

ASSET VALUE, THREAT HAZARD, VULNERABILITY, AND RISK ASSESSMENT

1.12 An assessment should be conducted as part of the design process for each building.

SECURITY DESIGN CRITERIA

1.13 The design process for the building as well as the security systems should utilize proven systems and principles to design an integrated security program capitalizing on the synergistic strength of three basic security elements. These elements are illustrated in the diagram below and include: (1) architectural protective measures such as entry flow, locks, doors, etc., (2) operational measures relating to employee and visitor access control, security staffing, policies and procedures, and (3) technical electronic security systems such as automated access control, alarm monitoring systems, video surveillance systems, etc.

1.14 The concepts and strategies explored during the design process for each building should follow the recognized security principles of Crime Prevention through Environmental Design (CPTED) and Concentric Circles of Protection. CPTED is a concept that attempts to utilize planned resources such as architectural barriers, landscaping, and lighting, in conjunction with traditional electronic security elements, to reduce vulnerability to crime. The concept of CPTED is based on the premise that the physical environment can be designed to produce behavioral effects that will reduce the incidence and fear of crime.

1.15 Through the integration and balance of architectural, electronics, and operational measures, security staffing is minimized and systems are installed only when required. The following diagram shows the three elements and the inherent overlap between them. It is important to note that no one element stands alone.

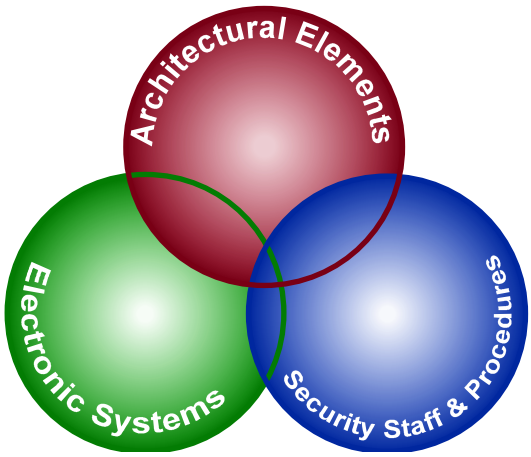

1.16 The concept of Concentric Circles of Protection is based on varying levels of protection originating at the furthest most perimeters, and becoming increasingly more restrictive as one proceeds through each level to reach the most critical internal areas. Intervention zones are created to provide control locations and/or funneling points. These intervention zones provide an opportunity for response, evaluation, and control of intruders or unauthorized individuals. Examples of intervention zones may include personnel posted at lobbies, and the use of electronic systems such as card reader controlled locations or intrusion detection devices. The following chart illustrates the various levels of protection.

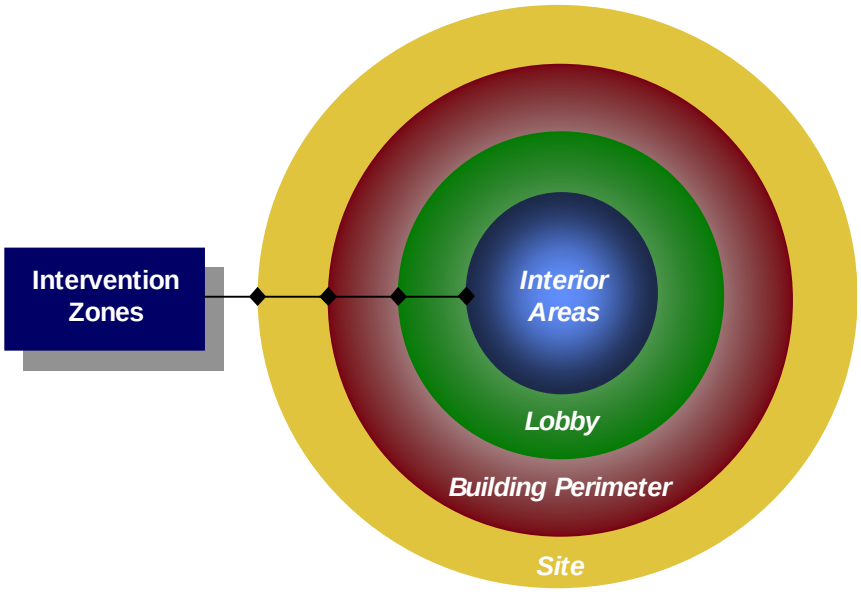

INDUSTRY STANDARDS

1.17 The following industry standards shall be adhered to unless specifically directed otherwise by the City of San Antonio Information Technology Services Department. The list is not all-inclusive and does not alleviate compliance with the latest applicable standards, codes, and best practices:

A. Americans with Disabilities Act (ADA)

B. Crime Prevention Through Environmental Design (CPTED)

C. NFPA 70: National Electric Code (NEC)

D. NFPA 101: Life Safety Code

E. NFPA 730: Guide for Premises Security

F. NFPA 731: Standard for the Installation of Electronic Premises Security

G. BICSI's Electronic Safety and Security Design Reference Manual (ESSDRM)

H. Underwriter's Laboratories (UL) Applicable Standards

I. NECA 1: Standard Practice of Good Workmanship in Electrical Contracting

J. Electronic Industries Alliance (EIA) Applicable Standards

K. Telecommunications Industry Association (TIA) Applicable Standards

L. Institute of Electrical and Electronics Engineers (IEEE) Applicable Standards

M. Family Educational Rights and Privacy Act (FERPA)

N. Texas Accessibility Standards (TAS)

O. Illuminating Engineering Society of North America

CONTRACTOR QUALIFICATIONS

1.18 Contractor shall be licensed as required through the State of Texas to provide, install and service each applicable physical security system listed within this document.

1.19 Contractor shall be authorized and certified as required by the manufacturers to provide, install and service each applicable physical security system listed within this document.

1.20 Contractor shall possess relevant past-experience and references for minimum of (5) projects of similar size and scope to that of the owner's.

WARRANTY ON PARTS AND LABOR.

1.21 The contractor shall furnish a 1-year warranty on all equipment and labor from the date of final system acceptance.

1.22 Defects in material or workmanship appearing within this period of time, shall be promptly repaired without cost to the City of San Antonio for material or labor.

ACRONYM DEFINITIONS

1.23 Access Control System (ACS)

Data Gathering Panel (DGP)

1.24 Intrusion Detection System (IDS)

1.25 Digital Alarm Panel (DAP)

1.26 Video Surveillance System (VSS)

NOMENCLATURE

Security Equipment Room - An environmentally controlled architectural space used for housing security equipment.

CITY OF SAN ANTONIO SECURITY SYSTEM GUIDELINE

1.27 Security Spaces

A. Security Equipment Room

1. Description

a. The Security Equipment Room is a dedicated security space that serves a building.

1) It is preferred a Security Equipment Room be provided in all facilities. If, it is not possible for a Security Equipment Room to be provided, the Project Architect and Security Consultant shall coordinate with the City of San Antonio Information Technology Services Department to coordinate space for security equipment inside the MDF Room and applicable IDF Rooms.

b. The Security Equipment Room houses terminations and cross connections for all incoming security wiring from the security devices throughout the building.

c. Fire alarm panels and building control panels shall not be located inside the Security Equipment Room. Space allocation for these systems needs to occur outside of the Security Equipment Room.

d. The Security Equipment Room shall not be used for storage, serve as a mechanical or electrical distribution space, nor shall it have within its space main electrical feeds, electrical switch gear, transformers, and water or sprinkler main lines.

e. The layout of cabinets, equipment racks, wall fields, and cable management shall be as indicated on the attached diagrams.

2. Architectural Requirements

a. The Security Equipment Room shall be a minimum of 81 square feet with minimum clear lineal walls of at least 9 feet by 9 feet. The size of the Security Equipment Room shall be coordinated with and approved by the City of San Antonio Information Technology Services Department during the design.

b. All walls inside the Security Equipment Room shall go to deck. When walls are drywall they shall be double layered drywall on both sides to help reduce the risk of unauthorized entry.

c. The Security Equipment Room shall be located adjacent to the building MDF Room.

d. The floor finish shall be sealed bare concrete or VCT.

e. The Security Equipment Room shall not contain windows.

f. The Security Equipment Room shall not be located adjacent to or below restrooms or other water-based facilities, or sources of EMI and mechanical vibration.

g. A minimum of two (2) walls shall be covered with 4-feet x 8-feet x ¾-inch AC Grade Void Free Fire Retardant Plywood, aligned vertically starting at 12 inches above the finished floor. The plywood shall be installed with the “A” grade side exposed and the “C” grade side against the building or structure. The plywood shall be painted with two coats of fire retardant paint and one stamp from each sheet shall be masked during the painting and uncovered after the paint has dried so the fire rated plywood stamps are visible for inspection.

h. The minimum ceiling height shall be 9-feet above finished floor with the following preferences of finishes.

1) No ceiling is the preferred finish

2) Hard ceiling is acceptable if leaving open to structure is not possible. If this option is approved it is recommended the ceiling height inside the Security Equipment Room be higher than the ceiling height in the corridor outside the Security Equipment Room so the cables entering into the Security Equipment Room do not have to pass through the hard ceiling inside the Security Equipment Room.

3) The last alternative is a lift-out ceiling. If a lift-out ceiling tile is required this shall be coordinated and approved by the City of San Antonio Information Technology Services Department during the design process. If this option is approved it is recommended the ceiling height inside the Security Equipment Room be higher than the ceiling height in the corridor outside the Security Equipment Room so the cables entering into the

Security Equipment Room do not have to pass through the lift-out ceiling inside the Security Equipment Room.

i. Entry to the space shall be through a minimum 36-inch by 80-inch clear door opening that swings outward. Door shall be solid core or steel and shall not have any windows. The door shall securely lock and access shall only be by City of San Antonio Information Technology Services Department-approved personnel. The door shall open to an interior hallway or space, it is not recommended the door open to the exterior of the building.

j. The Security Equipment Room shall be equipped with a card reader and electrified door hardware.

k. Fire suppression for the Security Equipment Room shall be determined by the specific code requirements for the fire protection scheme of the overall building. If a fire suppression system is designed, it shall be designed to avoid running distribution over the security equipment cabinets, racks and equipment.

3. HVAC Requirements

a. The Security Equipment Room shall be serviced by a dedicated unit that is part of the building's main system and be equipped with a Split DX system through the wall above the door which cools only when the building HVAC is inadequate or not running. The unit shall maintain a constant 24/7 cooled environment between 68° and 77° F with relative humidity of 40% - 55%.

b. Changes in temperature and humidity shall be kept to around 1 percent.

c. The minimum HVAC load shall be designed to displace 4KW of power, or 1 Ton, and shall be coordinated with the City of San Antonio Information Technology Services Department during the design and designed to load if the known load is greater at the time of design.

d. It is recommended the Security Equipment Room maintain the stated temperature and humidity in the event of building power outages or primary HVAC system failure.

e. Air delivery shall be aligned in the front of the equipment rows and returns at the rear of the equipment rows when possible.

f. HVAC sensors and controls shall be located in the Security Equipment Room at 5-ft AFF.

g. A hard-wired wall mounted thermostat shall be located inside the Security Equipment Room.

h. HVAC systems shall be alarmed for power loss, high and low temperature, high and low humidity, smoke detection, compression failures and water flooding.

i. A simplex data drop shall be installed within 12 inches of the unit so it can be incorporated into the Building Automation System (BAS).

4. Lighting Requirements

a. Florescent light fixtures shall be at least 24 inches above the top of the highest cabinet, rack, cable runway or wiring field (approximately 84 inches), 36 inches is recommended.

b. Lighting shall be a minimum of 50 foot candles at 2 feet above the floor in the entire space.

c. The Security Equipment Room shall be equipped with emergency lighting to keep the space lit during power outages.

5. Power Requirements

a. All electrical service outlets shall be on emergency power.

b. All electrical service outlets shall be labeled with the associated panel and circuit information.

c. The originating electrical panel shall be properly sized for the loads calculated and shall be located in the nearest Electrical Room.

d. Power for the Security Equipment Room shall be in two categories: dedicated and convenience.

1) Dedicated

a) Access Control System

(1) Data Gathering Panels shall be equipped with dedicated power at the security riser backboard, consisting of a hard-wired connection to a 120VAC 20A emergency circuit.

(2) Centralized Power Supplies shall be equipped with dedicated power at the security riser backboard, consisting of a hard-wired connection to a 120VAC 20A emergency circuit.

b) Intrusion Detection System

(1) Digital Alarm Panels shall be equipped with dedicated power at the security riser backboard, consisting of a 120VAC 20A duplex outlet on an emergency circuit.

(2) Centralized Power Supplies shall be equipped with dedicated power at the security riser backboard, consisting of a hard-wired connection to a 120VAC 20A emergency circuit.

c) Video Surveillance System

(1) Video Surveillance System shall be equipped with dedicated power at the security riser backboard, consisting of a 120VAC 20A duplex outlet on an emergency circuit.

2) Convenience

a) The Security Equipment Room shall be equipped with 20 Amp duplex NEMA 5-20R receptacles, with maximum (3) receptacles on each circuit. The originating electrical panel shall be equipped with a 20 Amp breaker per circuit.

b) A duplex receptacle shall be spaced at least 1 foot from an adjacent wall and every 6 feet thereafter. A minimum of (1) duplex receptacle shall be placed in each wall and be flush mounted to the finished wall surface at 18 inches above finished

1.28 Access Control System

A. All ACS electronics and software will be Owner Provided/Owner Installed utilizing a physical security systems contractor hired directly by the City of San Antonio.

B. Security Consultant shall coordinate with the City of San Antonio Information Technology Services Department on all ACS device locations required per project.

C. This section will address typical device locations, door hardware coordination, power, physical security cabling, network drops, conduit and rough-in requirements required by the architectural design team to support the ACS electronics and software.

D. Acceptable equipment manufacturers have been listed for reference only.

E. ACS Software (See Exhibit 1 for List of Manufacturers and Products)

1. Hirsch Velocity is the current ACS software used by the City.

2. The existing server resides at the ITSD Frio Data Center.

F. General

1. A typical ACS system shall consist of data gathering panels, door interface modules, card readers, electrified locks, request exit devices, door position switches, power supplies and cabling.

G. ACS Data Gathering Panel

1. General

a. The data gathering panels are configured in two (2) and eight (8) position door panels and associated power supplies. The data gathering panels will be walled mounted in the Security Equipment Room or MDF Room on a physical security riser backboard.

b. All data gathering panels shall be located in the Security Equipment Room or MDF Room of each building unless distances or pathways make it necessary to locate some panels in IDFs.

c. The maximum security wiring distance from a data gathering panel to an ACS device is 1500'. If the ACS device can not be reached within this distance a data gathering panel will be required in an IDF closer to the ACS device.

2. Power Requirements

a. All data gathering panels will require dedicated power at the security riser backboard, consisting of a hard-wired connection to a 120VAC 20A emergency circuit.

3. Network Drops

a. All data gathering panels will require (1) dedicated data network drop at the security riser backboard location at 18" A.F.F.

H. ACS Door Configuration

1. General

a. Security Consultant shall coordinate with the City of San Antonio, design team and door hardware consultant to determine the door hardware being provided for each applicable door and to ensure the proper door trim is provided depending on whether door is emergency egress or not.

b. With the exception of the card reader rough-in, all conduit rough-ins / pathways will be provided on the secure side of the door.

2. Security Wiring

a. Security Consultant shall design and coordinate the pathway for the ACS as required based upon the door hardware. The pathway will route into the nearest accessible ceiling.

b. Security wiring will consist of composite access control cable for the lock power, card reader, door contact and REX applications from the DGP to the door.

c. Security wiring shall be provided with 20 feet of slack left neatly coiled and stored at each end above the DGP and the secure side of the door.

3. Power Requirements

a. Power will be 24VDC and provided via the security wiring from centralized power supply, which is located at the applicable security riser.

b. The centralized power supply will require hard wired connection to 120VAC, 20A emergency circuit.

I. ACS Interface to Fire Alarm System

1. The Security Consultant shall coordinate with the design team and fire alarm designer and/or contractor to ensure the appropriate interface is provided to allow the automated unlocking of applicable emergency egress doors in a life safety situation as required.

J. Card Reader Control of Elevator Hallway Call Button

1. General

a. Each facility and elevator will need to be evaluated and coordinated with the City of San Antonio to determine if the access control system will be required to interface with the elevator.

b. When required, the Security Consultant shall coordinate with design team/elevator consultant during the design process to ensure the appropriate interface is provided to allow the hallway call function to be controlled through security system.

2. Security Wiring

a. Security wiring will consist of a gray 18 AWG, 6-conductor wire from the card to the DGP.

b. Security wiring shall be provided with 20 feet of slack left neatly coiled and stored at each end above the DGP and elevator control panel.

3. Power Requirements

a. Power will be 24VDC and provided via the security wiring from centralized power supply, which is located at the applicable security riser.

b. The data gathering panel and centralized power supply will require hard wired connection to 120VAC, 20A emergency circuit.

K. ACS Interface to Elevator Systems

1. Each facility and elevator will need to be evaluated and coordinated with the City to determine if the access control system will be required to interface with the elevator.

2. When required, the Security Consultant shall coordinate with design team/elevator consultant during the design process to ensure the appropriate interface is provided to allow the hallway call function to be controlled through security system.

3. When required, all hallway call buttons for elevators on all floors shall be card reader controlled by the security system on a time programmable basis.

4. When in the card reader control mode, the hallway call button shall be disabled. The passenger shall be required to hold their access card up to a card reader mounted adjacent to the call button station. Upon a valid card read, the security system shall enable the call button. The passenger must then push the desired call button. Once the passenger has pushed the button, the elevator control system shall illuminate the button and call the elevator to the floor.

5. The elevator contractor shall provide one pair of terminals per controlled call button such that a dry contact closure across the terminals by the security system shall enable the call button. The button shall remain enabled for as long as the dry contact is closed.

L. Typical Doors requiring ACS control, door trim prep, conduit rough-in and physical security wiring

1. Main Entrance

2. Weapons Storage

3. Funds Storage

4. Transaction Areas

5. Pharmacy Spaces

6. Medical Records Rooms

7. Criminal Justice Information Systems (CJIS) Areas

8. MDF/IDF Rooms

9. Security Equipment Room

1.29 Intrusion Detection System Equipment

A. All IDS electronics and software will be Owner Provided/Owner Installed utilizing a physical security systems contractor hired directly by the City of San Antonio.

B. Security Consultant shall coordinate with the City of San Antonio Information Technology Services Department on all IDS device locations required per project.

C. This section will address device locations, power, physical security wiring, network drops, conduit and rough-in requirements required by the architectural design team to support the IDS electronics

D. Acceptable equipment manufacturers have been listed for reference only.

E. IDS System Electronics and Software (See Exhibit 1 for List of Manufacturers and Products)

1. Bosch Intrusion Detection System is the current IDS system used by the City.

F. General

1. An IDS system shall consist of, digital alarm panels, arm/disarm keypads, expansion modules, dual technology motion sensors, sirens, network adapters, high temp sensors, power supplies and wiring.

G. Digital Alarm Panel (DAP)

1. General

a. Digital alarm panels will be wall mounted in the Security Equipment Room or MDF Room on a security riser backboard location.

b. Digital alarm panels shall be located in the Security Room or MDF Room of each building unless distances or pathways make it necessary to locate some panels in IDFs.

2. Power Requirements

a. All digital alarm panels will require dedicated power at the security riser backboard, consisting of a 120VAC 20A duplex outlet on an emergency circuit.

3. Network Drops

a. All digital alarm panels will require (1) dedicated data network drop at the security riser backboard location at 18” A.F.F.

4. Plain Old Telephone Service (POTS) Line

a. All digital alarm panels will require (1) dedicated POTS line drop at the security riser backboard location at 18” A.F.F.

H. Arm/Disarm Keypad

1. General

a. Keypads will be mounted at 48” A.F.F at the appropriate locations.

b. Keypads will require a single gang backbox with a single gang device ring and a 1” conduit stubbed out above ceiling of the nearest accessible ceiling.

2. Security Wiring

a. Security wiring to each IDS device will consist of a gray 18 AWG, 4-conductor wire from the DAP to keypad locations.

b. The maximum security wiring distance from a DAP to a keypad is 500’. If the keypad cannot be reached within this distance, a DAP will be required in an IDF closer to the keypad.

c. Security wiring shall be provided with 20 feet of slack left neatly coiled and stored at each end.

3. Power Requirements

a. Power will be 24VDC and provided via the security wiring from centralized power supply, which is located at the applicable security riser.

4. Typical Keypad Locations:

1) Main Entry Vestibule

2) Staff Entrance Doors

I. Motion Detectors

1. General

a. It is preferred that motion detectors be ceiling mounted when lay-in ceiling is available.

b. Ceiling mounted motion detectors do not require a conduit rough-in or backbox.

c. Coordinate ceiling mounted locations with other ceiling mounted devices (e.g. lights, fire exit signs, etc.).

d. Ceiling mounted motion detectors should not be mounted near A/C vents as this could cause false alarms.

e. Where lay-in ceiling is not available, wall mounted motion detectors shall be utilized.

f. Wall mounted motion detectors will require a single gang backbox with a single gang device ring and a 1” conduit stubbed out above ceiling of the nearest accessible ceiling.

g. Wall mounted motion detector rough-in locations will be mounted within 6” of ceiling but not lower than 8’-6” and no higher than 10’-0”.

2. Security Wiring

   a. Security wiring will consist of a gray 18 AWG, 4-conductor wire from the DAP to the motion detectors.

   b. The maximum security wiring distance from a DAP to a motion detector is 500'. If the IDS motion detector cannot be reached within this distance, a DAP will be required in an IDF closer to the motion detector.

   c. Security wiring shall be provided with 20 feet of slack left neatly coiled and stored at each end.

3. Power Requirements

   a. Power will be 24VDC and provided via the security wiring from centralized power supply, which is located at the applicable security riser.

4. Typical Motion Detector Locations:

   a. All first floor rooms with exterior windows.

   b. All floors above the first floor will have motion detectors within the hallways at stairwells or major cross-corridors.

   c. Roof Access points.

J. Door Position Switches

1. General

   a. Door position switches will be mounted at in the head of the door frame.

   b. Door position switches will require a ¾" hole in the head of the door frame and a ¾" x 1 5/8" hole in the top of the door.

2. Security Wiring

   a. Security wiring will consist of a gray 18 AWG, 2-conductor wire from the DAP to the door position switch.

   b. The maximum security wiring distance from a DAP to a door position switch is 500'. If the IDS door position switch cannot be reached within this distance, a DAP will be required in an IDF closer to the door position switch.

   c. Security wiring shall be provided with 20 feet of slack left neatly coiled and stored at each end.

3. Power Requirements

   a. Power will be 24VDC and provided via the security wiring from centralized power supply, which is located at the applicable security riser.

4. Typical Door Position Switch Locations:

   a. All exterior doors.

   b. All doors with a card reader.

1.30 Video Surveillance System

A. All VSS electronics and software will be Owner Provided/Owner Installed utilizing a physical security systems contractor hired directly by the City of San Antonio.

B. Security Consultant shall coordinate with the City of San Antonio Information Technology Services Department on all VSS device locations required per project.

C. This section will address device locations, power, physical security wiring, network drops, conduit and rough-in requirements required by the architectural design team to support the VSS electronics

D. Acceptable equipment manufacturers have been listed for reference only.

E. Video Surveillance System Software (See Exhibit 1 for List of Manufacturers and Products)

   1. Genetec Video Management Software is the current software used by the system.

F. Cameras Types and Mounting

   1. Interior Wall Mounted

      a. General

         1) Wall mounted cameras will be mounted within 6” of ceiling but not lower than 8’-6” and no higher than 10’-0”.

      b. Power

         1) Cameras shall be powered from PoE network switch located within the applicable MDF or IDF room.

      c. Network Drops

         1) Security Consultant shall coordinate with IT Consultant to have one (1) Category 6 cable for data at each IP camera location.

2. Interior Ceiling Mounted:

   a. General

      1) Ceiling mounted cameras will be mounted within the accessible ceiling tile or hard ceiling.

      2) Ceiling mounted cameras shall be provided with support struts between ceiling grid and tie off to structure above.

   b. Power

      1) Cameras shall be powered from PoE network switch located within the applicable MDF or IDF room.

   c. Network Drops

      1) Security Consultant shall coordinate with IT Consultant to have one (1) Category 6 cable for data at each IP camera location.

3. Exterior Wall Mounted

   a. General

      1) Wall mounted cameras will be mounted between 9’-0” A.F.F. and 15’-0” A.F.F depending on wall design and landscaping obstructions.

   b. Power

      1) Cameras shall be powered from PoE network switch located within applicable MDF or IDF room.

   c. Network Drops

      1) Security Consultant shall coordinate with IT Consultant to have one (1) Category 6 cable for data at each IP camera location.

4. Pan-Tilt-Zoom (PTZ) Cameras

   a. General

      1) Security Consultant shall coordinate with the City of San Antonio on when and where PTZ cameras are to be utilized.

   b. Power

      1) Pan-Tilt-Zoom (PTZ) cameras will be powered from a power injector which requires a duplex outlet with a 120VAC 20A circuit dedicated to a power injector mounted in the applicable MDF Room or IDF Room.

      2) The exact location of the power will need to be coordinated in the applicable MDF Room or IDF Room.

c. Network Drops

1) Security Consultant shall coordinate with IT Consultant to have one (1) Category 6 cable for data at each IP camera location.

5. Exterior Pole Mounted Cameras

a. General

1) Project site will be prepped for future pole mounted cameras.

2) High voltage and low voltage shall not share the same pathway. A dedicated pathway shall be provided for all low voltage security wiring.

3) Pole mounted cameras will be mounted between 12’-0” AFF and 15’-0” A.F.F. Coordinate with lighting poles.

b. Power

1) Provide a duplex outlet with a 120VAC 20A circuit dedicated to a power injector within NEMA 4 enclosure mounted at base of the light pole.

c. Network Drop

1) Security Consultant shall coordinate with IT Consultant to have one (1) Category 6 cable for data to each IP camera location. If the camera location is out of distance limitations for Category 6 cable, the Security Consultant shall coordinate with IT Consultant to have fiber and appropriate media convertors at each IP camera location.

6. Exterior Camera Housing

a. General

1) All exterior cameras shall be equipped with heater/blower.

b. Power Requirements

1) Camera housings shall be powered from PoE network switch or power injectors located within the nearest MDF or IDF room.

2) Security Consultant shall coordinate with the City of San Antonio on the powering requirements for the exterior camera housing.

7. Surge Suppression

1) Provide surge suppressor for all exterior mounted cameras.

2) Surge suppression shall be configured to protect video, power and data wiring for exterior cameras.

G. Typical Camera Coverage

1. Main Entrance
2. Stairs
3. Hallways
4. Perimeter of Buildings
5. Resource Areas within a Location

1.31 Architectural Requirements and Recommendations

A. Lighting

1. Adequate lighting is desirable throughout the building and site, within the parking areas, public areas, at the exterior of the building and in public interiors such as lobbies, corridors, and walkways. The appropriate use of lighting will enhance security and help foster a safe and secure environment. Appropriate lighting is important for many reasons including; deterring criminal activity, discouraging unwanted visitors, assisting security personnel in their ability to view, identify and respond to security situations, and promoting a sense of safety and security.

2. There are three different considerations that apply to site lighting:

   a. Video Surveillance – Lighting required for optimal performance of standard color Video Surveillance cameras is in the one-foot candle range.

   b. Safety – Lighting for safety purposes as defined by the Illuminating Engineers Society of North America (IESNA) takes into account only the levels needed to prevent accidents and to accommodate normal facility use.

   c. Security – There are no current standards for protective or security lighting. There have been attempts however by the Department of the Army (DA) in establishing security lighting levels.

3. The following light levels are a compilation of IESNA recommendations, which we feel, are appropriate given the typical nature of the sites. The lighting levels should be considered to represent baseline requirements. Minimum luminance values are as follows:

EXTERIOR LIGHTING		
Application	Light Level (LUX)	Light Level (FC)
Building Entrances*	50	5
Building Emergency Exits	10	1
Loading Platforms and Docks	20	2
Building Surroundings	10	1
Roadways	5	.5
Landscaped Areas	5	.5
Parking	50 (avg.) 4:1 (avg:min)	5 (avg.) 4:1 (avg:min)

a. Lighting levels at the exterior of building entrances should maintain the same illumination level of the interior lobby so as to avoid light reflection from the inside (if the exterior is darker than the inside, reflection will occur on the interior of the glass).

b. Where applicable, lighting for perimeter fencing of a secure area should maintain a minimum of one foot candle and should be provided at the perimeter fence, extending at least 10 feet beyond the fence line. This lighting should be designed to project from within the secure area, out toward the fence to highlight perpetrators while silhouetting the security personnel.

c. It should be noted that certain exterior lighting levels might not be possible due to local “light pollution” codes.

INTERIOR LIGHTING		
Application	Light Level (LUX)	Light Level (FC)
Elevators	100	10
Corridors	50	5
Lobbies	50	5
Stairways	100	10
Camera Locations	10	1

d. Lighting will play an important role in deterring crime and maintaining a safe environment inside and around the buildings. The importance of lighting cannot be overemphasized.

B. Door Openings and Hardware

1. Door and door frame construction should meet the penetration resistance of supporting walls. Frames should be securely attached to the walls. Gap tolerances should be limited to prevent forced entry.

2. The door hardware consultant should coordinate electrified locking hardware for all controlled openings.

3. All security controlled and monitored doors shall be equipped with high security closers such as LCN Closers High Security Series.

4. Hinge pins for all security controlled doors shall be located on the secure side of the door. Where this is not possible and hinge pins are located on the non-secure side, fixed tamper proof hinge pins shall be used.

5. All cylinders for security controlled and monitored doors shall be equipped with interchangeable cores.

C. Landscaping

1. The building landscaping scheme should utilize elements to define traffic patterns and security zones, while providing maximum visibility across the site. Specific recommendations in regard to landscaping include:

   a. Landscaping should not provide convenient places to hide and should provide for unobstructed surveillance from the building outward.

   b. Tree canopies should maintain a 10’-0” distance above grade (minimum).

   c. Ground shrubs and bushes should be limited to a height of 12” – 18” (maximum).

   d. Planting of trees within parking lots should be avoided. Where this is not possible, consideration for clear lines of sight, both pedestrian and cameras, should be enforced.

   e. A clear area around each building of at least 5 feet should be maintained to discourage access while facilitating easy surveillance.

   f. Tangling or thorny underbrush should be used to dissuade access to certain areas such as:

      1) Building perimeters – a clear zone of five feet around all building perimeters could be established with tangling or thorny underbrush or ground covering.

2) Potential Hiding Places – Building nooks or recesses that would accommodate concealment should be avoided entirely. Where this cannot be accomplished, tangling or thorny underbrush should be used to prevent access to these areas.

D. Signage

1. Signage should be used to direct all visitors and staff to the proper control points. Due to the size and multiple functions of some facilities, this will be a critical component in preventing accidental misuse of entrances into the facility.

E. Fencing

1. Where chain-link fencing is considered for the protection of certain areas, the following guidelines are recommended:

a. Fence shall be eight feet high (minimum), excluding top guard.

b. Fence shall be constructed of nine gauge or heavier

c. Mesh opening shall not be larger than two inches per side.

d. Fence shall be fastened securely to rigid metal or reinforced posts set in concrete.

e. Fence shall reach within two inches (maximum) of ground/paving.

F. Parking Areas

1. Lines of sight should be maximized within parking areas, not only to facilitate security monitoring, but also to create a psychological feeling of openness and security to staff and visitors.

2. The placement of critical building components (electrical, mechanical, communications, etc.) within the parking areas should be avoided. If this is not possible, these spaces should be physically protected against intentional, or more likely, accidental damage. This can be accomplished using bollards and/or chain link fencing.

1.32 Labeling

A. Security Cables

1. Security Cables shall be labeled within 12 inches from the termination point inside the Security Equipment Room, MDF Room or IDF Room.

2. Security Cables shall be labeled within 12 inches from the termination point at the security device in the field.

3. Cables shall be labeled identically at both ends.

1.33 Project Completion

A. Install the security wiring in accordance with the project schedule.

B. Test all security wiring for continuity after the wire has been pulled to it appropriate locations.

C. The Owner or Owner's representative will prepare a punch list of items identified during the test that require correction.

Final Acceptance Testing

D. The Owner or its representatives will conduct acceptance testing of the Work in phases.

E. Prior to the acceptance test, coordinate with the Construction Manager for security related construction clean-up and patch work requirements. Security equipment closets and similar areas shall be free of accumulation of waste materials or rubbish caused by operations under the Contract. At completion of the Work, remove all waste materials, rubbish, the Contractor's and it's Sub-Contractors' tools, construction equipment, machinery and all surplus materials.

F. Upon successful completion of the acceptance test (or subsequent punch list retest) the Owner will issue a letter of acceptance.

1.34 As-Built Documentation

A. Produce drawings depicting the condition of the Physical Security System as installed produced in AutoCAD 2010 or higher and provided in hardcopy, electronically in .DWG and .PDF format. Include the exact dimensions and locations security riser wall elevations, conduit rough-in locations, device locations, wiring pathways and numbering and labeling scheme.

SUMMARY OF GUIDELINES

1.35 Summary

A. All aspects of this City of San Antonio Physical Security System Infrastructure Guideline shall be applied to the design process for both new and renovated facilities.

B. A Division 28 Security Wiring Specification and TS-Series drawings shall be commissioned and issued by the Architect during the design phases for each facility or project.

EXHIBITS

EXHIBIT 1 - ACCEPTABLE MANUFACTURERS / PRODUCTS

C. The following list or manufacturers/products is provided for reference only and is not all inclusive. All manufacturers/products shall be verified by the Security Consultant for each project and confirmed with The City of San Antonio Information Technology Services Department prior to issuing any construction documents.

D. Where specific manufacturers/products are mentioned, an equivalent will be considered following an official submission of product literature and written acceptance by the City of San Antonio Information Technology Services Department.

E. Access Control System

1. Access Control System Server (Existing)

2. Access Control System Software (Owner Provided/Owner Installed)

   a. Hirsch Velocity

3. Access Control System Data Gathering Panels (Owner Provided/Owner Installed)

   a. Hirsch DIGI TRAC M2N2 and M8N2

4. Access Control System Centralized Power Supply (Owner Provided/Owner Installed)

   a. Altronix Lock Power Supply AL600ULACM

5. Access Control System Wiring (Contractor Provided/Contractor Installed)

   a. Belden 658AFS Composite

6. Request to Exit Device (Owner Provided/Owner Installed)

   a. Assa Abloy Securitron XMS Exit Motion Sensor

7. Card Reader (Owner Provided/Owner Installed)

   a. HID iCLASS/Prox/PIV - WS

8. Electric Strikes (Owner Provided/Owner Installed)

   a. HES 9500, HES 9600, Assa Abloy 7400 Series

F. Intrusion Detection System

1. Intrusion Detection System Panel (Owner Provided/Owner Installed)

   a. Bosch 9412 Series Panel

2. Door Contact (Owner Provided/Owner Installed)
    a. General Electric Sentrol Door Contacts
3. Intrusion Detection System Wiring (Contractor Provided/Contractor Installed)
    a. Beldon 6300FE
    b. Belden 6302FE

G. Video Surveillance System Server (Owner Provided/Owner Installed)

H. Video Surveillance System Software (Owner Provided/Owner Installed)

1. Genetec Video Management Software

I. Video Surveillance Cameras (Owner Provided/Owner Installed)

1. Axis

EXHIBIT 2 – TYPICAL DETAILS

Sheet – 1 – Typical door detail for electrified door hardware

Sheet – 2 – Typical Door detail for electrified lock hardware

Sheet – 3 – Typical door position switch detail

Sheet – 4 – Typical keypad rough-in detail

Sheet – 5 – Typical ceiling mounted dome camera detail

Sheet – 6 – Typical exterior wall mounted camera detail

Sheet – 7 – Typical wall layout detail

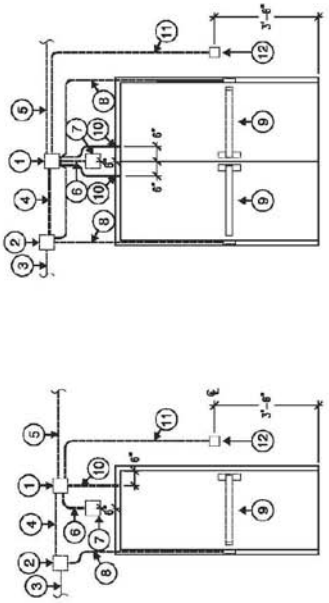

1. 12" X 12" X 6" JUNCTION BOX ABOVE ACCESSIBLE CEILING AT DOOR (SECURED SIDE). (BY DIV. 26)
2. ELECTRIFIED PANIC HARDWARE POWER SUPPLY ABOVE ACCESSIBLE CEILING AT DOOR (SECURED SIDE). (BY OWNER)
3. DEDICATED 20 AMP CIRCUIT HARDWIRED TO ELECTRIFIED PANIC HARDWARE POWER SUPPLY (SECURED SIDE). (BY DIV. 26)
4. 1" EMT CONDUIT FROM ELECTRIFIED PANIC HARDWARE POWER SUPPLY TO 12" X 12" X 6" JUNCTION BOX (SECURED SIDE). (BY DIV. 26)
5. 1" EMT CONDUIT TO NEAREST ACCESSIBLE CEILING (SECURED SIDE). (BY DIVISION 26)
6. ¾" EMT CONDUIT FROM 12" X 12" X 6" JUNCTION BOX TO A RECESSED SINGLE GANG BOX INSTALLED HORIZONTALLY ABOVE DOOR FOR REQUEST-TO-EXIT / MOTION SENSOR DEVICE (SECURED SIDE). (BY. DIV. 26)
7. RECESSED SINGLE GANG BOX INSTALLED HORIZONTALLY FOR REQUEST TO EXIST / MOTION SENSOR DEVICE (SECURED SIDE). (BY DIV. 26).
8. ¾" EMT CONDUIT FROM HARDWARE POWER SUPPLY ABOVE ACCESSIBLE CEILING AT DOOR DOWN DOOR FRAME TO BACK BOX FOR POWER TRANSFER HINGE. (BY DIV. 26)
9. ELECTRIFIED PANIC HARDWARE. (BY DIV. 8)
10. ¾" EMT CONDUIT FROM 12" X 12" X 6" JUNCTION BOX TO HEAD OF DOOR FRAME FOR DOOR POSITION SWITCH. STUB CONDUIT INTO HEAD OF DOOR FRAME 6" FROM STRIKE SIDE OF DOOR. PROVIDE 3" BLOCKOUT FOR GROUTED FRAMES. (BY DIV. 26)
11. ¾" EMT CONDUIT FROM 12" X 12" X 6" JUNCTION BOX TO RECESSED DOUBLE GANG BOX WITH A SINGLE GANG PLASTER RING FOR CARD READER (UNSECURED SIDE). (BY DIV. 26)
12. RECESSED DOUBLE GANG BOX WITH SINGLE GANG PLASTER RING FOR CARD READER (UNSECURED SIDE). BY DIV. 26)

X / XX TYPICAL CARD READER ROUGH-IN - ELECTRIFIED EXIT DEVICE

SCALE: N.T.S.

CITY OF SAN ANTONIO
PHYSICAL SECURITY STANDARDS

PROJECT NAME:

DATE: 03-13-14

SHEET: 1

SCALE: As Shown

EXAMPLE

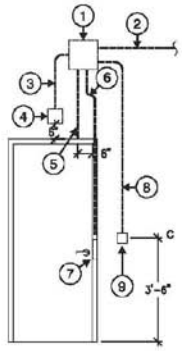

SINGLE DOOR

EXAMPLE

1. 12" X 12" X 6" JUNCTION BOX ABOVE ACCESSIBLE CEILING AT DOOR (SECURED SIDE). (BY DIV. 26)
2. 1" EMT CONDUIT TO NEAREST ACCESSIBLE CEILING (SECURED SIDE). (BY DIVISION 26)
3. 3/4" EMT CONDUIT FROM 12" X 12" X 6" JUNCTION BOX TO A RECESSED SINGLE GANG BOX INSTALLED HORIZONTALLY ABOVE DOOR FOR REQUEST-TO-EXIT / MOTION SENSOR DEVICE (SECURED SIDE). (BY. DIV. 26)
4. RECESSED SINGLE GANG BOX INSTALLED HORIZONTALLY FOR REQUEST TO EXIST / MOTION SENSOR DEVICE (SECURED SIDE). (BY DIV. 26).
5. 3/4" EMT CONDUIT FROM 12" X 12" X 6" JUNCTION BOX TO HEAD OF DOOR FRAME FOR DOOR POSITION SWITCH. STUB CONDUIT INTO HEAD OF DOOR FRAME 6" FROM STRIKE SIDE OF DOOR. PROVIDE 3" BLOCKOUT FOR GROUTED FRAMES. (BY DIV. 26)
6. 3/4" EMT CONDUIT FROM 12" X 12" X 6" JUNCTION BOX DOWN DOOR FRAME FOR ELECTRIC STRIKE LOCK POWER. (BY DIV. 26)
7. ELECTRIC STRIKE (BY DIVISION 8)
8. 3/4" EMT CONDUIT FROM 12" X 12" X 6" JUNCTION BOX TO RECESSED DOUBLE GANG BOX WITH A SINGLE GANG PLASTER RING FOR CARD READER (UNSECURED SIDE). (BY DIV. 26)
9. RECESSED DOUBLE GANG BOX WITH SINGLE GANG PLASTER RING FOR CARD READER (UNSECURED SIDE). (BY DIV. 26)

X / X.X TYPICAL CARD READER ROUGH-IN - ELECTRIC STRIKE

SCALE: N.T.S.

COMBS	PROJECT NAME: CITY OF SAN ANTONIO PHYSICAL SECURITY STANDARDS	DATE: 03-13-14	SHEET: 2 SCALE: As Shown

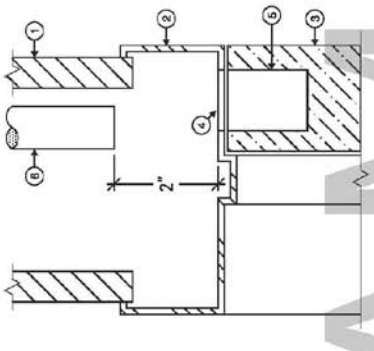

KEYED NOTES:

1. SCHEDULED PARTITION
2. HEAD OF DOOR FRAME
3. SCHEDULED DOOR
4. 3/4" DIAMETER HOLE IN THE HEAD OF FRAME FOR CONCEALED DOOR POSITION SWITCH.
5. 3/4" DIAMETER X 1 5/8" DEEP HOLE IN TOP OF DOOR FOR CONCEALED DOOR POSITION SWITCH MAGNET.
6. 3/4" EMT CONDUIT FROM 12" X 12" X 6" BACK BOX ABOVE DOOR. (BY DIV 26)

X / X.X TYPICAL DOOR POSITION SWITCH

SCALE: N.T.S.

EXAMPLE

COMBS

PROJECT NAME:

CITY OF SAN ANTONIO
PHYSICAL SECURITY STANDARDS

DATE: 03-13-14

SHEET: 3

SCALE: As Shown

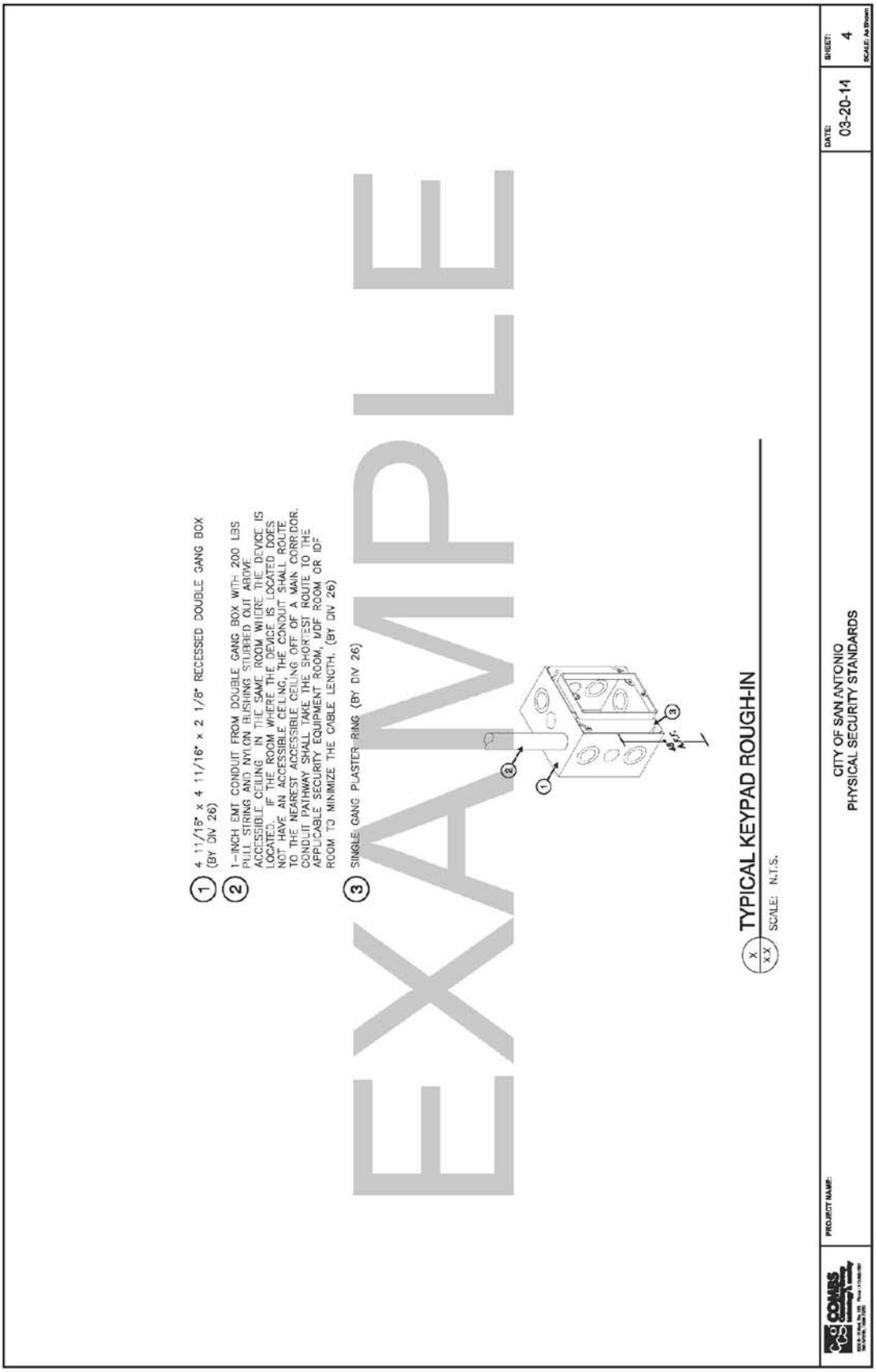
1 4 11/16" x 4 11/16" x 2 1/8" RECESSED DOUBLE GANG BOX (BY DIV 26)
2 1-INCH EMT CONDUIT FROM DOUBLE GANG BOX WITH 200 LBS PULL STRING AND NYLON BUSHINGS STUBBED OUT ABOVE ACCESSIBLE CEILING. IN THE SAME ROOM WHERE THE DEVICE IS LOCATED. IF THE ROOM WHERE THE DEVICE IS LOCATED DOES NOT HAVE AN ACCESSIBLE CEILING, THE CONDUIT SHALL ROUTE TO THE NEAREST ACCESSIBLE CEILING OFF OF A MAIN CORRIDOR. CONDUIT PATHWAY SHALL TAKE THE SHORTEST ROUTE TO THE APPLICABLE SECURITY EQUIPMENT ROOM, MDF ROOM OR IDF ROOM TO MINIMIZE THE CABLE LENGTH. (BY DIV 26)
3 SINGLE GANG PLASTER RING (BY DIV 26)
EXAMPLE
X XX TYPICAL KEYPAD ROUGH-IN
SCALE: N.T.S.
CITY OF SAN ANTONIO
PHYSICAL SECURITY STANDARDS
PROJECT NAME:
DATE: 03-20-14
SHEET: 4
SCALE: As Shown

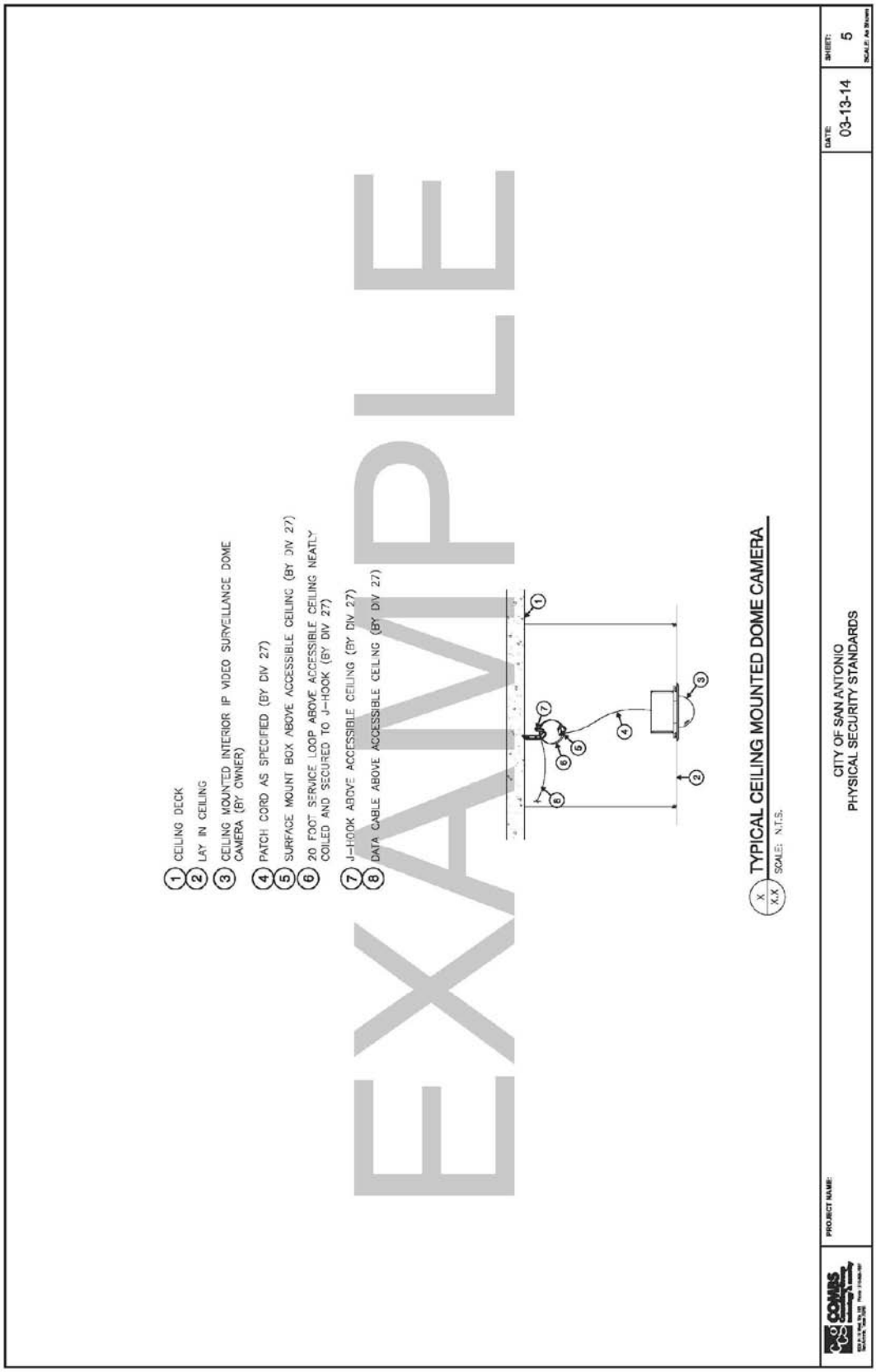
1 CEILING DECK
2 LAY IN CEILING
3 CEILING MOUNTED INTERIOR IP VIDEO SURVEILLANCE DOME CAMERA (BY OWNER)
4 PATCH CORD AS SPECIFIED (BY DIV 27)
5 SURFACE MOUNT BOX ABOVE ACCESSIBLE CEILING (BY DIV 27)
6 20 FOOT SERVICE LOOP ABOVE ACCESSIBLE CEILING NEATLY COILED AND SECURED TO J-HOOK (BY DIV 27)
7 J-HOOK ABOVE ACCESSIBLE CEILING (BY DIV 27)
8 DATA CABLE ABOVE ACCESSIBLE CEILING (BY DIV 27)
EXAMPLE
X
X.X
TYPICAL CEILING MOUNTED DOME CAMERA
SCALE: N.T.S.
PROJECT NAME:
CITY OF SAN ANTONIO
PHYSICAL SECURITY STANDARDS
DATE:
03-13-14
SHEET:
5

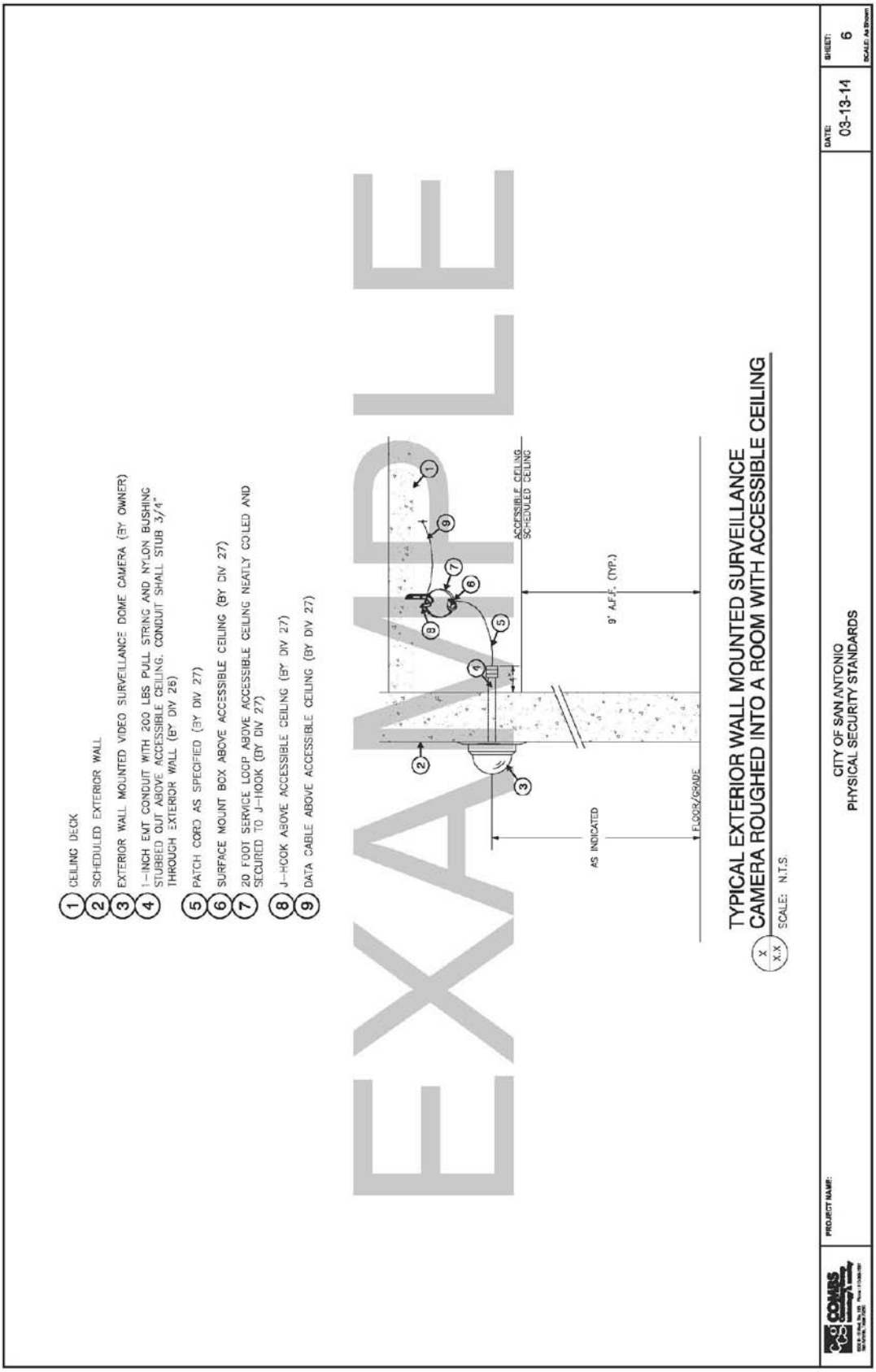
1 CEILING DECK
2 SCHEDULED EXTERIOR WALL
3 EXTERIOR WALL MOUNTED VIDEO SURVEILLANCE DOME CAMERA (BY OWNER)
4 1-INCH EMT CONDUIT WITH 200 LBS PULL STRING AND NYLON BUSHING STUBBED OUT ABOVE ACCESSIBLE CEILING. CONDUIT SHALL STUB 3/4" THROUGH EXTERIOR WALL (BY DIV 26)
5 PATCH CORD AS SPECIFIED (BY DIV 27)
6 SURFACE MOUNT BOX ABOVE ACCESSIBLE CEILING (BY DIV 27)
7 20 FOOT SERVICE LOOP ABOVE ACCESSIBLE CEILING NEATLY COILED AND SECURED TO J-HOOK (BY DIV 27)
8 J-HOOK ABOVE ACCESSIBLE CEILING (BY DIV 27)
9 DATA CABLE ABOVE ACCESSIBLE CEILING (BY DIV 27)
EXAMPLE
ACCESSIBLE CEILING
SCHEDULED CEILING
9' A.F.F. (TYP.)
AS INDICATED
FLOOR/GRADE
TYPICAL EXTERIOR WALL MOUNTED SURVEILLANCE
CAMERA ROUGHED INTO A ROOM WITH ACCESSIBLE CEILING
X
X.X
SCALE: N.T.S.
CITY OF SAN ANTONIO
PHYSICAL SECURITY STANDARDS
PROJECT NAME:
DATE:
03-13-14
SHEET:
6
SCALE: As Shown

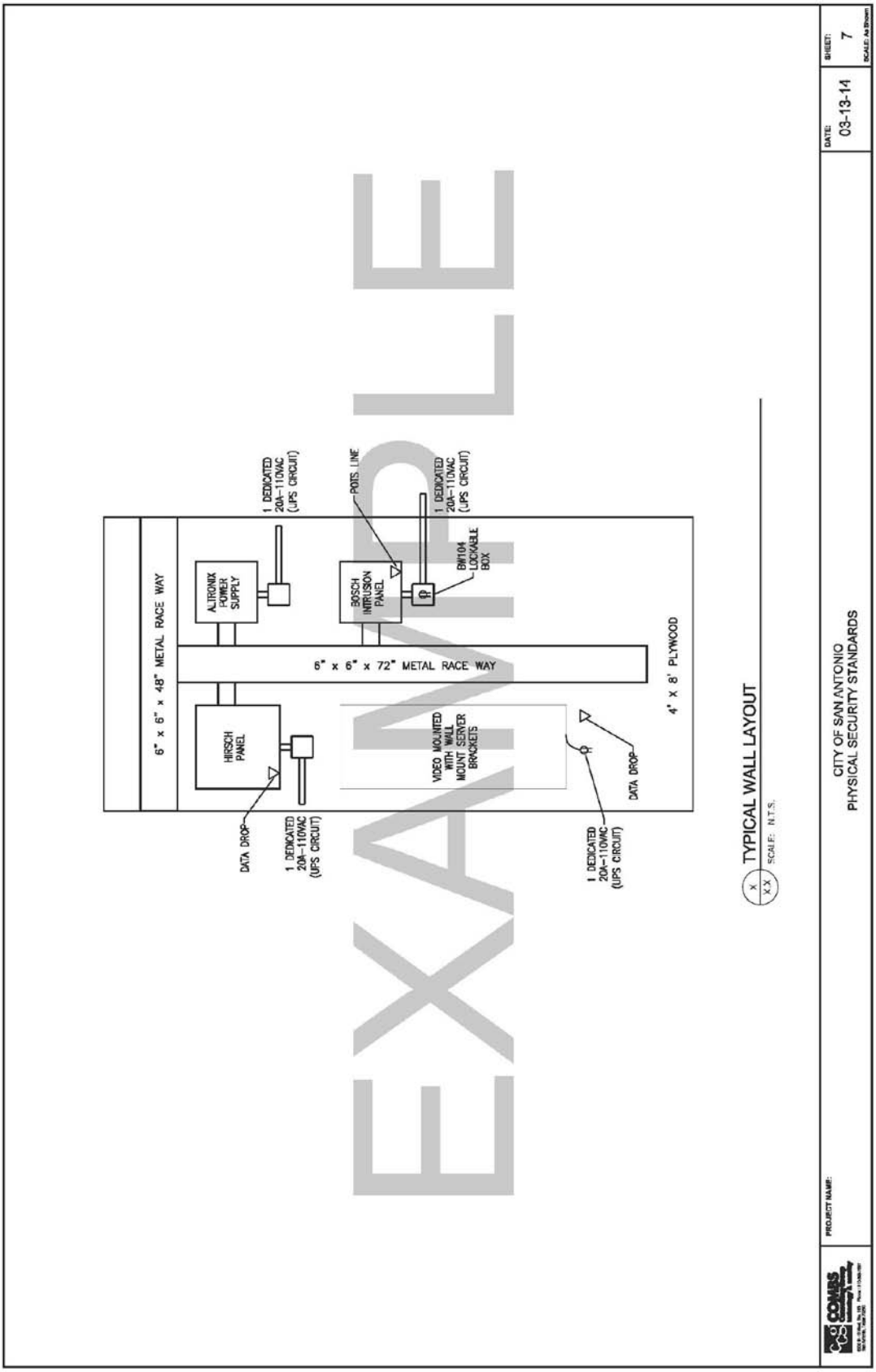
6" x 6" x 48" METAL RACE WAY
ALTRONIX POWER SUPPLY
1 DEDICATED 20A-110VAC (UPS CIRCUIT)
BOSCH INTRUSION PANEL
POTS LINE
BW104 LOCKABLE BOX
1 DEDICATED 20A-110VAC (UPS CIRCUIT)
6" x 6" x 72" METAL RACE WAY
4' x 8' PLYWOOD
HIRSCH PANEL
VIDEO MOUNTED WITH WALL MOUNT SERVER BRACKETS
DATA DROP
DATA DROP
1 DEDICATED 20A-110VAC (UPS CIRCUIT)
1 DEDICATED 20A-110VAC (UPS CIRCUIT)
X
XX
TYPICAL WALL LAYOUT
SCALE: N.T.S.
CITY OF SAN ANTONIO
PHYSICAL SECURITY STANDARDS
PROJECT NAME:
DATE:
03-13-14
SHEET:
7
SCALE: As Shown
COMBS
EXAMPLE

END OF GUIDELINE