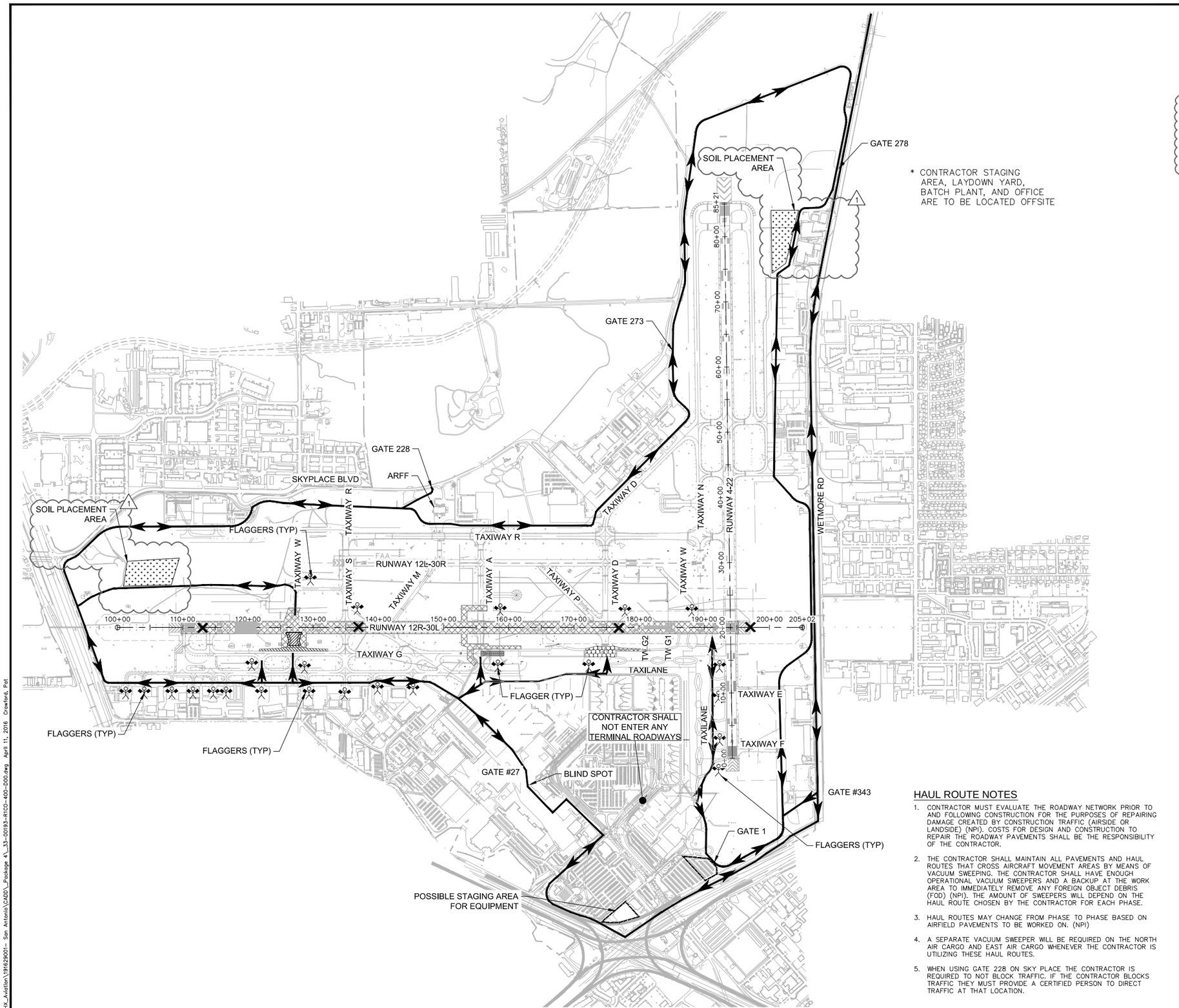

LEGEND

- BASE BID ELECTRICAL/CIVIL (75 DAYS)
- ALTERNATE 1 BID (65 DAYS)
- ALTERNATE 2 BID (50 DAYS)
- ALTERNATE 3 BID (85 DAYS)
- CONTRACTOR FIELD OFFICE, STAGING AND STORAGE AREA
- SOIL PLACEMENT AREA
- HAUL ROUTE
- PORTABLE LIGHTED RUNWAY CLOSURE MARKER (PROVIDED BY THE CONTRACTOR)
- FLAGGER (TO BE SUPPLIED BY CONTRACTOR)
- WING WALKER (TO BE SUPPLIED BY AIRLINES)

GENERAL NOTES

1. RUNWAY 4–22 AND 12R–30L WILL NOT BE CLOSED AT THE SAME TIME.
2. BECAUSE THE BATCH PLANT IS LOCATED OFFSITE, IT IS THE INTENT TO PROVIDE ENOUGH ENTRANCES AND OPTIONS FOR THE CONTRACTOR TO CHOOSE THEIR DESIRED HAUL ROUTE FOR ENTERING THE PROJECT LOCATION. THE CONTRACTOR WILL HAVE TO PROVIDE NECESSARY FLAGGERS (NPI) AND SWEEPERS (NPI) NECESSARY FOR EACH PHASE. ANY CHANGES TO THE HAUL ROUTES WILL NEED TO BE BROUGHT TO THE ATTENTION OF THE ENGINEER AND THE AIRPORT IMMEDIATELY. THE AIRPORT ALSO RESERVES THE RIGHT TO CHANGE/ALTER THE ROUTE DUE TO UNKNOWN CIRCUMSTANCES. NO ADDITIONAL PAYMENT WILL BE MADE FOR ALTERING THE ROUTE.
3. THE CONTRACTOR SHALL BE AWARE THAT CONSTRUCTION WILL BE ADJACENT TO ACTIVE AIRCRAFT OPERATIONS. CONSTRUCTION TRAFFIC SHALL YIELD TO AIRCRAFT AT ALL TIMES. THE CONTRACTOR SHALL NOT MOVE ANY EQUIPMENT ON ANY ACTIVE AIRPORT OPERATIONS AREA WITHOUT AN OPERATIONS OR MAINTENANCE STAFF ESCORT. DELAYS AND PRECAUTIONS RESULTING FROM AIRCRAFT MOVEMENTS SHOULD BE EXPECTED. EXPENSES ASSOCIATED WITH ANY DELAYS ARE INCIDENTAL TO THE PROJECT (NPI).
4. PORTABLE LIGHTED RUNWAY CLOSURE MARKERS (LIGHTED "X") WILL BE PROVIDED AND MAINTAINED BY THE CONTRACTOR THROUGHOUT THE DURATION OF THE PROJECT, REFER TO DETAIL 1, SHEET C2.3.
5. THE CONTRACTOR SHALL PROVIDE AND MAINTAIN LOW PROFILE BARRICADES, LIGHTS AND FLAGS FOR RUNWAY/TAXIWAY CLOSURES AS INDICATED ON THE CONSTRUCTION PHASING PLANS, REFER TO DETAIL SHEET C2.3. THE CONTRACTOR SHALL PLACE THE LOW PROFILE BARRICADES AS SHOWN ON EACH PHASING PLAN OR AS DIRECTED BY THE SAT OPERATIONS PRIOR TO BEGINNING CONSTRUCTION. THE CONTRACTOR SHALL BE RESPONSIBLE FOR MAINTAINING PROPER POSITIONING OF LOW PROFILE BARRICADES THROUGHOUT THE DURATION OF THE PROJECT (NPI).
6. THE CONTRACTOR SHALL COORDINATE WITH OPERATIONS AND MAINTENANCE STAFF TO COVER AND PROTECT ANY EXISTING GUIDANCE SIGNS AND EDGE LIGHTS ASSOCIATED WITH CLOSED RUNWAYS AND TAXIWAYS. DAMAGE TO SIGNS AND EDGE LIGHTS SHALL BE REPLACED AT THE CONTRACTOR EXPENSE (NPI).
7. THE CONTRACTOR SHALL REMOVE THE LOW PROFILE BARRICADES AND UNCOVER THE GUIDANCE SIGNS AND EDGE LIGHTS UPON COMPLETION OF THE PROJECT. DAMAGE TO SIGNS AND EDGE LIGHTS SHALL BE REPLACED AT THE CONTRACTORS EXPENSE (NPI).
8. CONTRACTOR IS RESPONSIBLE FOR THE SECURITY OF THE OFFSITE BATCH PLANT LOCATION. ALL MEASURES TO SECURE THE BATCH PLANT ARE THE RESPONSIBILITY OF THE CONTRACTOR.
9. THE CONTRACTOR IS RESPONSIBLE FOR THE SECURITY OF ANY OF THE TEMPORARY STAGING AREAS ASSOCIATED WITH THE PROJECT (NPI). FENCING WILL NOT BE ALLOWED TO BE ANCHORED INTO EXISTING PAVEMENT.
10. THE CONTRACTOR SHALL PROVIDE LICENSED GATE GUARDS IN ACCORDANCE WITH THE AIRPORTS STANDARDS AND REQUIREMENTS. COST FOR PROVIDING GATE GUARDS SHALL BE THE RESPONSIBILITY OF THE CONTRACTOR. THIS GUARD WILL NOT HAVE AUTHORITY OVER AIRPORT SECURITY WHILE ON DUTY. (NPI)
11. ALL VEHICLES WILL BE SUBJECT TO SEARCH BEFORE ENTERING THE SECURED AREA.
12. IT SHALL BE THE CONTRACTOR'S RESPONSIBILITY TO COORDINATE OFF–SITE ROUTES (STATE HIGHWAYS, COUNTY ROADS OR CITY STREETS) WITH THE APPROPRIATE OWNER WHO HAS JURISDICTION OVER THE AFFECTED ROUTE. ON–SITE HAUL ROUTES SHALL BE MAINTAINED BY THE CONTRACTOR AND SHALL BE RESTORED TO THEIR ORIGINAL CONDITION UPON COMPLETION OF BEING USED AS A HAUL ROUTE. THE CONTRACTOR SHALL PROVIDE APPROPRIATE TXDOT WARNING SIGNS PRIOR TO THE PROJECT ENTRANCE NOTIFYING THE TRAVELING PUBLIC. THESE SIGNS WILL BE REVIEWED AND APPROVED BY THE ENGINEER/AIRPORT AND BE PROVIDED FOR THE DURATION OF THE PROJECT. THESE SIGNS ARE CONSIDERED INCIDENTAL TO THE PROJECT. (NPI)
13. ALL MATERIAL REMOVED FROM THE PROJECT SHALL REMAIN ON AIRPORT PROPERTY AT A DESIGNATION TO BE DETERMINED BY THE AIRPORT, ENVIRONMENTAL, AND THE ENGINEER. THIS MATERIAL SHALL BE SPREAD COMPACTED AND SEEDED TO THE SATISFACTION OF THE ENGINEER. (NPI)
14. RUNWAY 12R–30L WILL BE RENUMBERED TO RUNWAY 13R–31L DURING THIS SAME RUNWAY CLOSURE. AIRPORT FORCES WILL RENUMBER THE RUNWAY, CHANGE SIGNING NOT ASSOCIATED WITH THIS PROJECT, AND PAINT NEW HOLD POSITION MARKINGS AT ALL INTERSECTIONS. CONTRACTOR MUST PROVIDE ACCESS TO AIRPORT MAINTENANCE PERSONNEL TO ACCOMPLISH THIS WORK.

750 0 750 1500
SCALE IN FEET

HAUL ROUTE NOTES

1. CONTRACTOR MUST EVALUATE THE ROADWAY NETWORK PRIOR TO AND FOLLOWING CONSTRUCTION FOR THE PURPOSES OF REPAIRING DAMAGE CREATED BY CONSTRUCTION TRAFFIC (AIRSIDE OR LANDSIDE) (NPI). COSTS FOR DESIGN AND CONSTRUCTION TO REPAIR THE ROADWAY PAVEMENTS SHALL BE THE RESPONSIBILITY OF THE CONTRACTOR.
2. THE CONTRACTOR SHALL MAINTAIN ALL PAVEMENTS AND HAUL ROUTES THAT CROSS AIRCRAFT MOVEMENT AREAS BY MEANS OF VACUUM SWEEPING. THE CONTRACTOR SHALL HAVE ENOUGH OPERATIONAL VACUUM SWEEPERS AND A BACKUP AT THE WORK AREA TO IMMEDIATELY REMOVE ANY FOREIGN OBJECT DEBRIS (FOD) (NPI). THE AMOUNT OF SWEEPERS WILL DEPEND ON THE HAUL ROUTE CHOSEN BY THE CONTRACTOR FOR EACH PHASE.
3. HAUL ROUTES MAY CHANGE FROM PHASE TO PHASE BASED ON AIRFIELD PAVEMENTS TO BE WORKED ON. (NPI)
4. A SEPARATE VACUUM SWEEPER WILL BE REQUIRED ON THE NORTH AIR CARGO AND EAST AIR CARGO WHENEVER THE CONTRACTOR IS UTILIZING THESE HAUL ROUTES.
5. WHEN USING GATE 228 ON SKY PLACE THE CONTRACTOR IS REQUIRED TO NOT BLOCK TRAFFIC. IF THE CONTRACTOR BLOCKS TRAFFIC THEY MUST PROVIDE A CERTIFIED PERSON TO DIRECT TRAFFIC AT THAT LOCATION.

CITY OF SAN ANTONIO AVIATION DEPARTMENT

SAN ANTONIO AIRPORT SYSTEM

Kimley»Horn

KIMLEY–HORN AND ASSOCIATES, INC.
601 NW LOOP 410, SUITE 350
SAN ANTONIO, TEXAS 78216
PHONE: (210) 541–9166

TEXAS REGISTERED FIRM, NO. 928

RUNWAY 12R-30L ELECTRICAL IMPROVEMENTS AND TERMINAL AREA TAXIWAY IMPROVEMENTS (PACKAGE 4)

MICHAEL A. NORBY
87178
REGISTERED PROFESSIONAL ENGINEER
05/31/16

MARK	DATE	DESCRIPTION
2	06/10/16	ADDENDUM 4
1	5/31/16	ADDENDUM 1
		RE–ISSUED SHEET

ISSUE:

PROJECT NO:	33-0019X
FILE NAME:	_33-00193-R1CO-400-D00
DRAWN BY:	CAD
CHECKED BY:	MAN
COPYRIGHT:	2016

SHEET TITLE:

OVERALL PHASING PLAN

C2.1

K:\PHX_Aviation\191629001– San Antonio\CADD_Package 4_33–00193–R1CO–400–D00.dwg April 11, 2016 Crawford, Pat

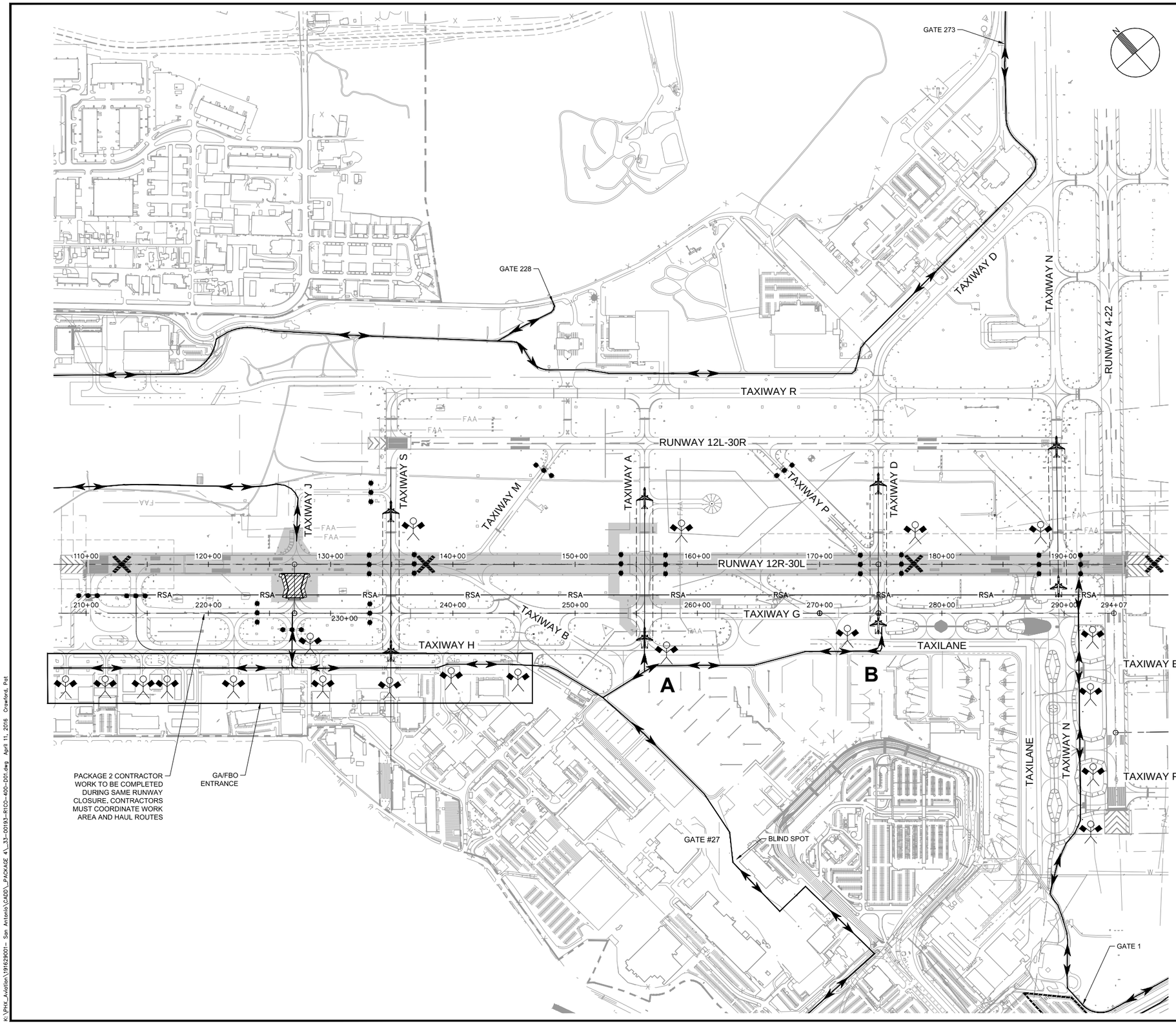

LEGEND

- INSTALL LOW LEVEL BARRICADES PER DETAILS ON SHEET C2.3
- INSTALL LINKED LOW LEVEL BARRICADES PER DETAILS ON SHEET C2.3
- AIRCRAFT WINGTIP
- TSA — TAXIWAY SAFETY AREA
- TOFA — TAXIWAY OBJECT FREE AREA
- INSTALL ORANGE SAFETY FENCE PER DETAILS ON SHEET C2.3
- HAUL ROUTE
- TAXIING AIRCRAFT
- FLAGGER (TO BE SUPPLIED BY CONTRACTOR)
- PORTABLE LIGHTED RUNWAY CLOSURE MARKER PROVIDED BY THE CONTRACTOR PER DETAILS ON SHEET C2.3
- A-B — INNER TAXILANE CROSSINGS

PHASING LEGEND

- PACKAGE 4 – BASE BID (CIVIL)
- PACKAGE 4 – BASE BID (ELECTRICAL)
- TOTAL DURATION = 75 DAYS (1)

GENERAL PHASE NOTES:

1. A SEPARATE NTP WILL BE ISSUED FOR EACH PHASE.
2. ACCESS TO THE WORK AREA IS SHOWN ON THE OVERALL PHASING PLAN.
3. EXISTING AIRFIELD LIGHTING CIRCUITS MUST REMAIN IN SERVICE FOR ALL AREAS OPEN TO AIRCRAFT DURING ALL HOURS OF DARKNESS AND DURING INSTRUMENT METEOROLOGICAL CONDITIONS (BELOW 1000' CEILING OR LESS THAN 3 MILES OF VISIBILITY) UNLESS PRIOR APPROVAL HAS BEEN OBTAINED FROM THE AIRPORT. NO DIRECT PAY FOR JUMPERS. CURRENT WEATHER CONDITIONS FOR THE AIRPORT MAY BE OBTAINED BY CALLING (210) 805–5583.
4. THE CONTRACTOR SHALL COVER INDICATED AIRFIELD GUIDANCE SIGNS OR PORTIONS OF SIGNS FOR RUNWAYS AND TAXIWAYS THAT ARE CLOSED DURING EACH PHASE. WORK WILL BE UNDER THE VARIOUS L–105 TEMPORARY ELECTRICAL ITEMS.
5. THE CONTRACTOR SHALL COVER INDICATED AIRFIELD LIGHTS FOR TAXIWAYS THAT ARE CLOSED DURING EACH PHASE. WORK SHALL BE UNDER THE VARIOUS L–105 TEMPORARY ELECTRICAL ITEMS.
6. THE CONTRACTOR SHALL REMOVE ALL TAXIWAY CENTERLINES LEADING INTO THE CONSTRUCTION AREA PRIOR TO THE COMMENCEMENT OF EACH PHASE AS SHOWN ON THE TEMPORARY MARKING PLAN FOR EACH PHASE (PAVEMENT MARKING REMOVAL) (NPI).
7. THE CONTRACTOR SHALL PROVIDE A VACUUM SWEEPER FOR EVERY 2 RUNWAY CROSSINGS PLUS A WORKING BACKUP. (NPI)
8. CONTRACTOR SHALL PROVIDE A VACUUM SWEEPER FOR EVERY 3 GA/FBO ENTRANCES PLUS A WORKING BACKUP. (NPI)
9. CONTRACTOR SHALL PROVIDE A VACUUM SWEEPER PLUS A WORKING BACKUP AT ANY LOCATION WHERE THEY ARE CROSSING THE INNER TAXILANE (A & B ETC.) OR ACTIVE TAXIWAYS. (NPI)
10. CONTRACTOR SHALL MAINTAIN EXISTING RUNWAY PAVEMENT MARKINGS IN THEIR CURRENT CONDITION. ANY DAMAGE OR DIRTYING OF THE STRIPING WILL REQUIRE THE CONTRACTOR TO REMARK THOSE AREAS AT NO ADDITIONAL COST TO THE OWNER.

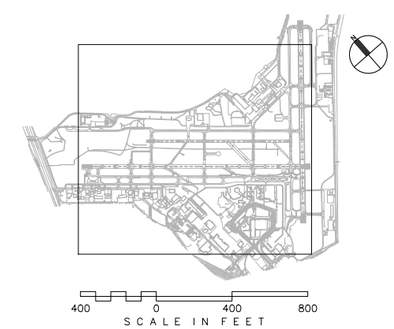

CITY OF SAN ANTONIO AVIATION DEPARTMENT

SAN ANTONIO AIRPORT SYSTEM

Kimley»Horn
KIMLEY–HORN AND ASSOCIATES, INC.
601 NW LOOP 410, SUITE 350
SAN ANTONIO, TEXAS 78216
PHONE: (210) 541–9166
TEXAS REGISTERED FIRM, NO. 928

RUNWAY 12R-30L ELECTRICAL IMPROVEMENTS AND TERMINAL AREA TAXIWAY IMPROVEMENTS (PACKAGE 4)

MICHAEL A. NORBY
87178
REGISTERED PROFESSIONAL ENGINEER
05/31/16

MARK	DATE	DESCRIPTION
1	06/10/16	ADDENDUM 4

ISSUE: -

PROJECT NO:	33-0019X
FILE NAME:	_33-00193-R1CO-400-D01
DRAWN BY:	CAD
CHECKED BY:	MAN
COPYRIGHT:	2016

SHEET TITLE:

OPERATIONS AND PHASING PLAN - BASE BID

C2.2

K:\PHX_Aviation\191629001– San Antonio\CADD_PACKAGE 4_33-00193-R1CO-400-D01.dwg April 11, 2016 Crawford, Pat

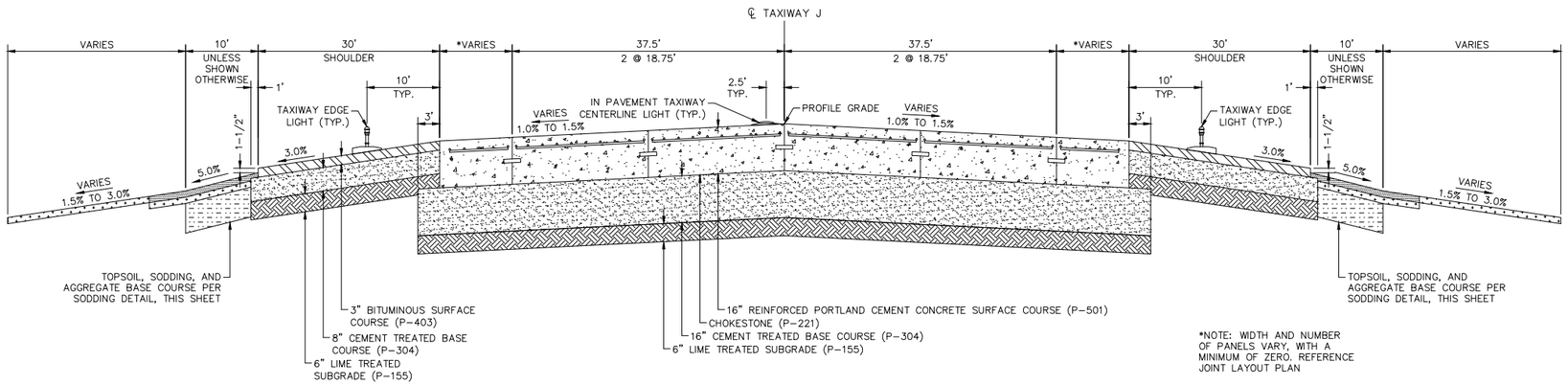

*NOTE: WIDTH AND NUMBER OF PANELS VARY, WITH A MINIMUM OF ZERO. REFERENCE JOINT LAYOUT PLAN

A / C4.1 TAXIWAY J (STA. 11+25.00 TO 13+25.00) TYPICAL SECTION

N.T.S

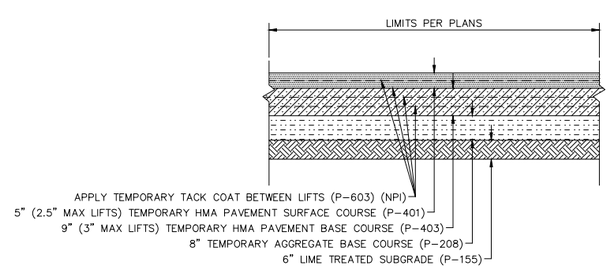

B / C4.1 TEMPORARY ASPHALT (FULL DEPTH) TYPICAL SECTION (STA 11+09.31 TO STA 11+25)

N.T.S

GENERAL NOTES

1. THE SUBGRADE IN CUT AREAS SHALL HAVE NATURAL DENSITIES SHOWN, OR
   - A. SHALL BE COMPACTED FROM THE SURFACE TO ACHIEVE THE REQUIRED DENSITIES.
   - B. SHALL BE REMOVED AND REPLACED IN WHICH CASE THE MINIMUM DENSITIES FOR FILLS APPLY. SEE SPECIFICATION P-152 FOR OVER-EXCAVATION REQUIREMENTS.
2. NON-COHESIVE SOILS, FOR THE PURPOSE OF DETERMINING COMPACTION, ARE THOSE WITH A P.I. < 6.

1

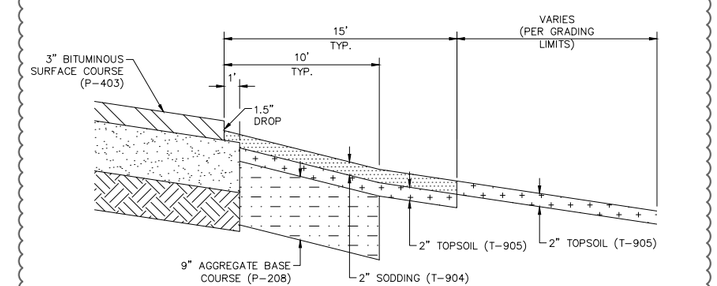

SODDING DETAIL

N.T.S

CITY OF SAN ANTONIO AVIATION DEPARTMENT

SAN ANTONIO AIRPORT SYSTEM

Kimley»Horn
KIMLEY-HORN AND ASSOCIATES, INC.
601 NW LOOP 410, SUITE 350
SAN ANTONIO, TEXAS 78216
PHONE: (210) 541-9166
TEXAS REGISTERED FIRM, NO. 928

RUNWAY 12R-30L ELECTRICAL IMPROVEMENTS AND TERMINAL AREA TAXIWAY IMPROVEMENTS (PACKAGE 4)

MICHAEL A. NORBY 87178 REGISTERED PROFESSIONAL ENGINEER
05/31/16

MARK	DATE	DESCRIPTION
1	06/10/16	ADDENDUM 4

ISSUE:

PROJECT NO:	33-0019X
FILE NAME:	_33-00193-R1CT-301-D00
DRAWN BY:	CAD
CHECKED BY:	MAN
COPYRIGHT:	2016

SHEET TITLE:

TYPICAL SECTIONS

C4.1

K:\PHX_Aviation\191629001- San Antonio\CADD_Package 4_33-00193-R1CT-301-D00.dwg April 11, 2016 Crawford, Pat

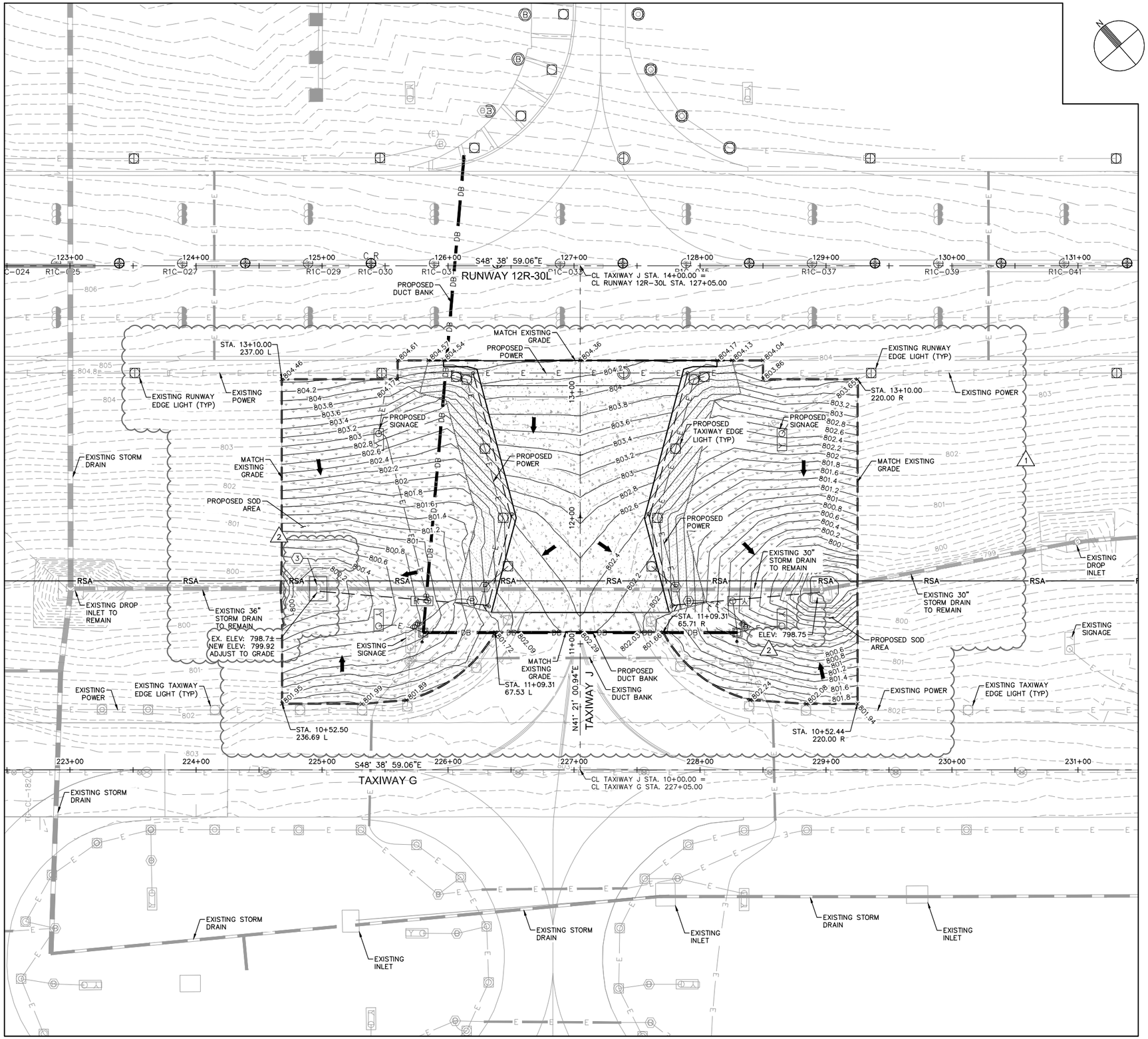

LEGEND

- PORTLAND CEMENT CONCRETE PAVEMENT
- PORTLAND CEMENT CONCRETE TRANSITION
- ASPHALT CONCRETE SHOULDER PAVEMENT
- ASPHALT CONCRETE TRANSITION
- PROPOSED SOD AREA
- PROPOSED SIGN
- DIRECTION OF FLOW
- 780 EXISTING CONTOUR
- 780 PROPOSED CONTOUR
- GRADING LIMITS
- +XXX.XX PROPOSED SPOT ELEVATION
- +(XXX.XX) EXISTING SPOT ELEVATION
- PROPOSED MANHOLE
- PROPOSED CATCH BASIN
- EXISTING INLET
- UCO PROPOSED UNDERDRAIN CLEANOUT
- PROPOSED UNDERDRAIN
- PROPOSED STORM DRAIN PIPE
- EXISTING STORM DRAIN PIPE

GENERAL NOTES

1. REFER TO SHEET C1.11 FOR HORIZONTAL AND VERTICAL CONTROL.
2. PAVEMENT ELEVATIONS SHOWN ARE BASED ON JOINT LAYOUT, REFER TO PAVEMENT JOINT LAYOUT PLANS (SERIES C7).
3. CONTRACTOR SHALL MATCH EXISTING PAVEMENT ELEVATIONS AS SHOWN ON PLAN. IF EXISTING ELEVATIONS DIFFER FROM THOSE SHOWN, THE CONTRACTOR SHALL NOTIFY THE ENGINEER IMMEDIATELY.
4. REFER TO ELECTRICAL PLANS (SERIES E) FOR AIRFIELD LIGHTING, SIGNING, AND ELECTRICAL FEATURES.
5. EXISTING UTILITIES ARE SHOWN IN APPROXIMATE LOCATIONS ONLY. CONTRACTOR SHALL VERIFY EXACT LOCATIONS OF ALL UNDERGROUND UTILITIES PRIOR TO COMMENCING WORK IN ANY AREA.
6. ALL STATIONS AND OFFSETS REFER TO THE APPROPRIATE RUNWAY OR TAXIWAY STATIONING.
7. DESIGN CONTOURS REPRESENT FINISHED GRADE (PAVEMENT AND GRADING). CONTOURS AND PERCENT OF SLOPE ARE APPROXIMATE AND ARE SHOWN AS SUPPLEMENTAL INFORMATION ONLY.

CONSTRUCTION NOTES

1. INSTALL SINGLE CATCH BASIN, SEE SHEET C9.2 FOR DETAILS
2. ADJUST TO GRADE, SEE SHEET C9.3 FOR DETAILS 1
3. ADJUST INLET TO GRADE, SEE SHEET C9.2 FOR DETAILS 2

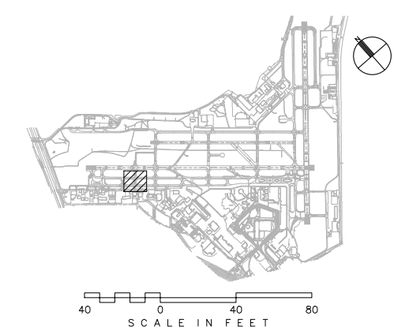

CITY OF SAN ANTONIO AVIATION DEPARTMENT

SAN ANTONIO AIRPORT SYSTEM

Kimley»Horn
KIMLEY-HORN AND ASSOCIATES, INC.
601 NW LOOP 410, SUITE 350
SAN ANTONIO, TEXAS 78216
PHONE: (210) 541-9166
TEXAS REGISTERED FIRM, NO. 928

RUNWAY 12R-30L ELECTRICAL IMPROVEMENTS AND TERMINAL AREA TAXIWAY IMPROVEMENTS (PACKAGE 4)

MICHAEL A. NORBY 87178 REGISTERED PROFESSIONAL ENGINEER
05/31/16

MARK	DATE	DESCRIPTION
2	06/13/16	ADDENDUM 4
1	5/31/16	ADDENDUM 1
		RE-ISSUED SHEET

ISSUE:

PROJECT NO:	33-0019X
FILE NAME:	_33-00193-R1CG-101-D00
DRAWN BY:	CAD
CHECKED BY:	MAN
COPYRIGHT:	2016

SHEET TITLE:

GRADING AND DRAINAGE PLAN - TAXIWAY J - BASE BID

C9.1

K:\PHX_Aviation\191629001- San Antonio\CADD_Package 4_33-00193-R1CG-101-D00.dwg April 11, 2016 Crawford, Pat

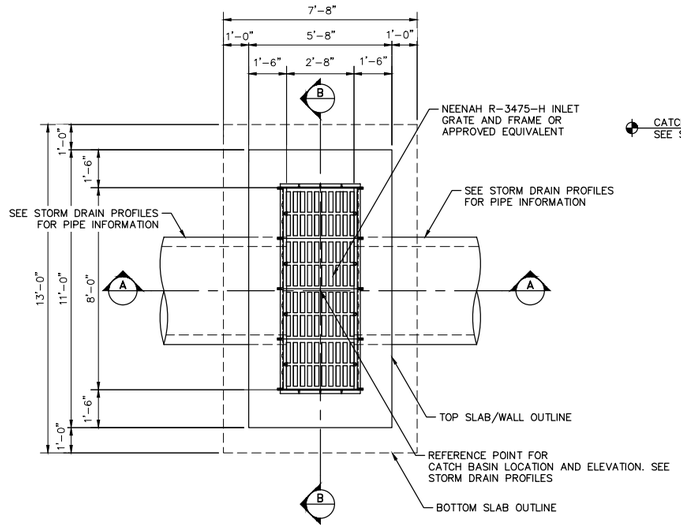

1 C9.2 — 2.67' x 8' CATCH BASIN PLAN

N.T.S.

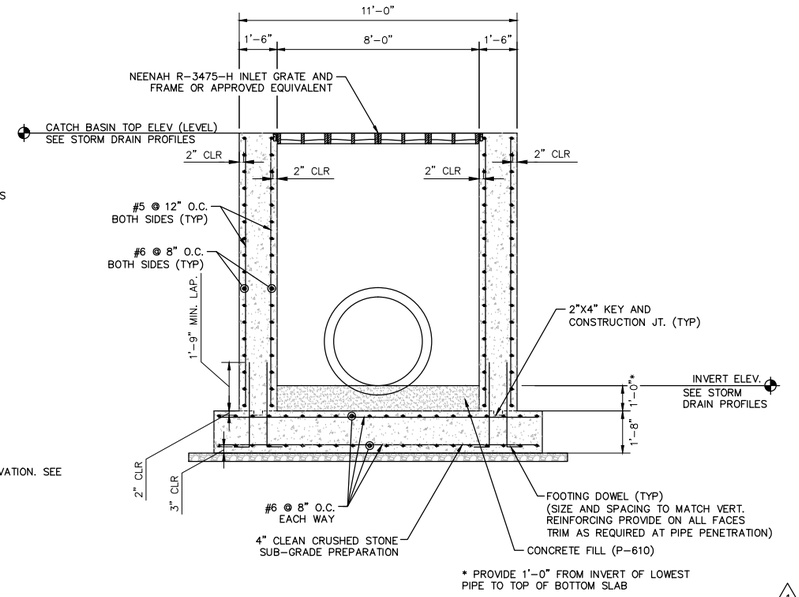

SECTION B-B

N.T.S.

GENERAL NOTES

1. CONCRETE f'c = 4,000 P.S.I @ 28 DAYS
2. REINFORCING STEEL SHALL BE ASTM A615, GRADE 60
3. PROVIDE 2" CLEAR COVER FOR REINFORCING STEEL UNLESS NOTED OTHERWISE
4. SEE STORM DRAIN PROFILES FOR CATCH BASIN TOP ELEVATIONS AND INLET INVERT ELEVATIONS
5. PREPARE SUB-GRADE IN ACCORDANCE WITH PROJECT GEOTECHNICAL ENGINEERS RECOMMENDATIONS
6. CONTRACTOR SHALL VERIFY 2'-8" X 8'-0"CATCH BASIN INTERIOR DIMENSIONS WITH SELECTED INLET GRATE MANUFACTURER PRIOR TO CONSTRUCTION OF CATCH BASIN
7. INLET MAY BE ROTATED TO BETTER MATCH INTO PIPE ALIGNMENTS

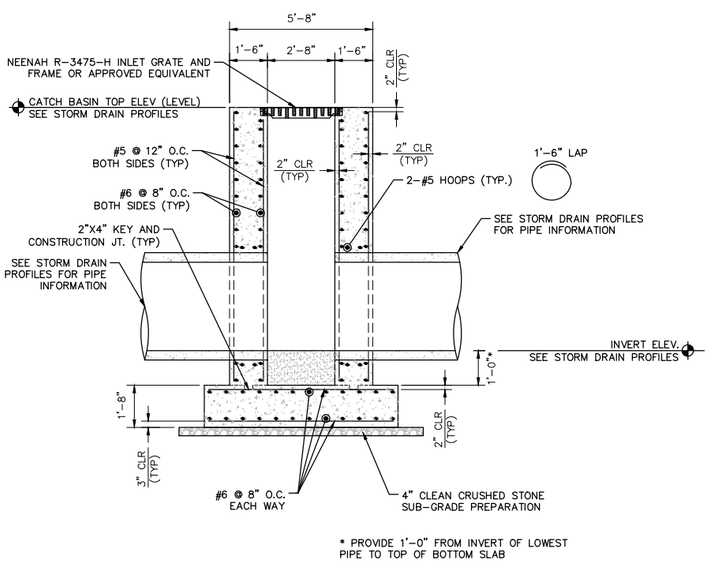

SECTION A-A

N.T.S.

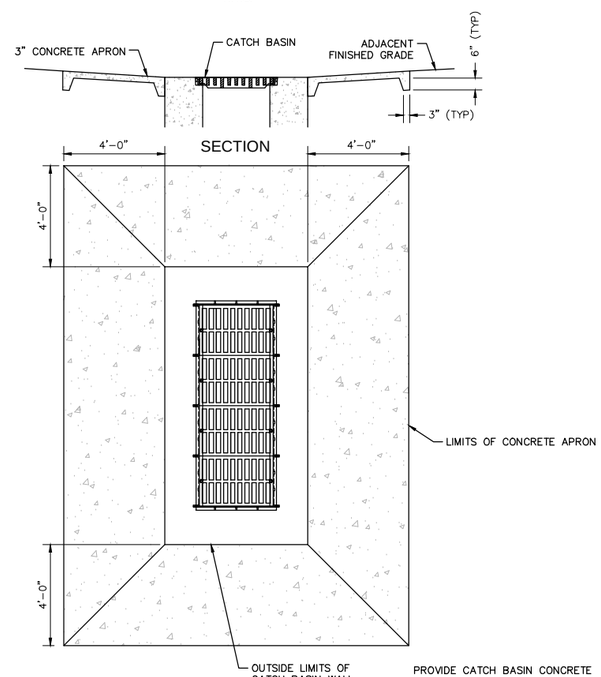

PLAN

PROVIDE CATCH BASIN CONCRETE APRON AT ALL CATCH BASINS NOT INSTALLED IN CONCRETE PAVEMENT. COST OF CONCRETE APRON SHALL BE INCLUDED IN COST OF CATCH BASIN.

2 C9.2 — CATCH BASIN CONCRETE APRON

N.T.S.

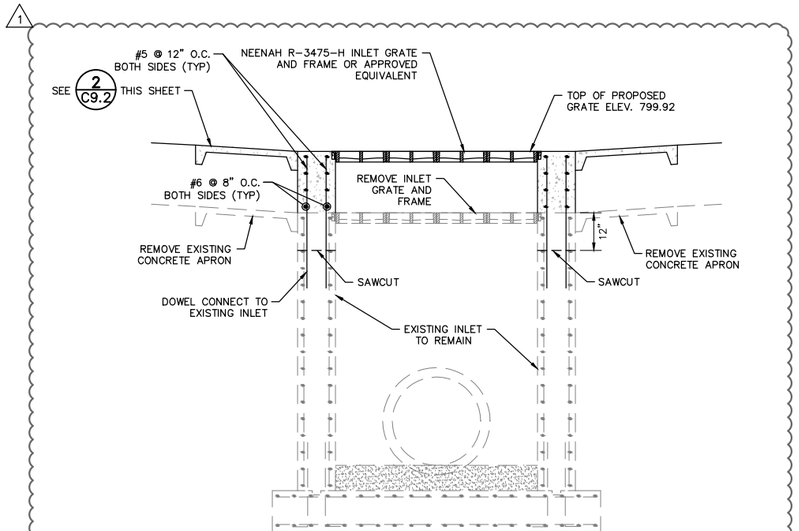

NOTES:

1. SAWCUT AND REMOVE TOP 12" OF EXISTING INLET INCLUDING GRATE AND FRAME AND CONCRETE APRON.
2. INSTALL GRATE AND FRAME AND CONCRETE APRON PER CATCH BASIN DETAILS.

3 C9.2 — ADJUST INLET TO GRADE

CITY OF SAN ANTONIO AVIATION DEPARTMENT

SAN ANTONIO AIRPORT SYSTEM

Kimley»Horn

KIMLEY-HORN AND ASSOCIATES, INC.
601 NW LOOP 410, SUITE 350
SAN ANTONIO, TEXAS 78216
PHONE: (210) 541-9166

TEXAS REGISTERED FIRM, NO. 928

RUNWAY 12R-30L ELECTRICAL IMPROVEMENTS AND TERMINAL AREA TAXIWAY IMPROVEMENTS (PACKAGE 4)

MICHAEL A. NORBY 87178 REGISTERED PROFESSIONAL ENGINEER 05/31/16

MARK	DATE	DESCRIPTION
1	06/13/16	ADDENDUM 4

ISSUE:

PROJECT NO:	33-0019X
FILE NAME:	_33-00193-R1CS-501-D01
DRAWN BY:	CAD
CHECKED BY:	MAN
COPYRIGHT:	2016

SHEET TITLE:

SINGLE CATCH BASIN DETAILS

C9.2

K:\PHX_Aviation\191629001- San Antonio\CADD_PACKAGE 4_33-00193-R1CS-501-D01.dwg April 11, 2016 Crawford, Pat

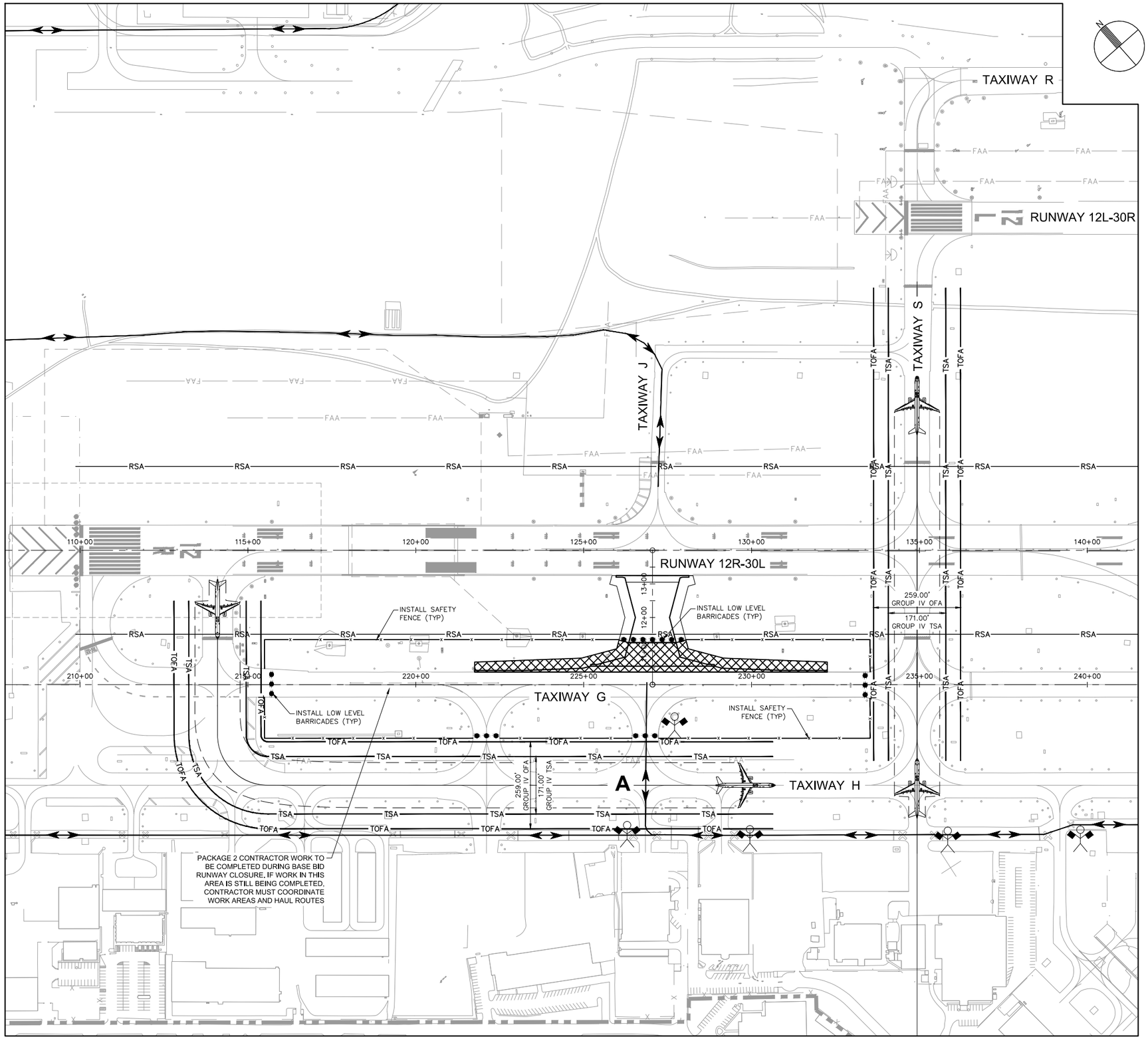

LEGEND

- INSTALL LOW LEVEL BARRICADES PER DETAILS ON SHEET C2.3
- INSTALL LINKED LOW LEVEL BARRICADES PER DETAILS ON SHEET C2.3
- AIRCRAFT WINGTIP
- TSA — TAXIWAY SAFETY AREA
- TOFA — TAXIWAY OBJECT FREE AREA
- INSTALL ORANGE SAFETY FENCE PER DETAILS ON SHEET C2.3
- HAUL ROUTE
- TAXIING AIRCRAFT
- FLAGGER (TO BE SUPPLIED BY CONTRACTOR)
- PORTABLE LIGHTED RUNWAY CLOSURE MARKER PROVIDED BY THE CONTRACTOR PER DETAILS ON SHEET C2.3
- A-B — INNER TAXILANE CROSSINGS

PHASING LEGEND

PACKAGE 4 – ALTERNATE 1 (DURATION = 65 DAYS) 1

GENERAL PHASE NOTES:

1. A SEPARATE NTP WILL BE ISSUED FOR EACH PHASE.
2. ACCESS TO THE WORK AREA IS SHOWN ON THE OVERALL PHASING PLAN.
3. EXISTING AIRFIELD LIGHTING CIRCUITS MUST REMAIN IN SERVICE FOR ALL AREAS OPEN TO AIRCRAFT DURING ALL HOURS OF DARKNESS AND DURING INSTRUMENT METEOROLOGICAL CONDITIONS (BELOW 1000' CEILING OR LESS THAN 3 MILES OF VISIBILITY) UNLESS PRIOR APPROVAL HAS BEEN OBTAINED FROM THE AIRPORT. NO DIRECT PAY FOR JUMPERS. CURRENT WEATHER CONDITIONS FOR THE AIRPORT MAY BE OBTAINED BY CALLING (210) 805–5583.
4. THE CONTRACTOR SHALL COVER INDICATED AIRFIELD GUIDANCE SIGNS OR PORTIONS OF SIGNS FOR RUNWAYS AND TAXIWAYS THAT ARE CLOSED DURING EACH PHASE. WORK WILL BE UNDER THE VARIOUS L–105 TEMPORARY ELECTRICAL ITEMS.
5. THE CONTRACTOR SHALL COVER INDICATED AIRFIELD LIGHTS FOR TAXIWAYS THAT ARE CLOSED DURING EACH PHASE. WORK SHALL BE UNDER THE VARIOUS L–105 TEMPORARY ELECTRICAL ITEMS.
6. THE CONTRACTOR SHALL REMOVE ALL TAXIWAY CENTERLINES LEADING INTO THE CONSTRUCTION AREA PRIOR TO THE COMMENCEMENT OF EACH PHASE AS SHOWN ON THE TEMPORARY MARKING PLAN FOR EACH PHASE (PAVEMENT MARKING REMOVAL) (NPI).
7. THE CONTRACTOR SHALL PROVIDE A VACUUM SWEEPER FOR EVERY 2 RUNWAY CROSSINGS PLUS A WORKING BACKUP. (NPI)
8. CONTRACTOR SHALL PROVIDE A VACUUM SWEEPER FOR EVERY 3 GA/FBO ENTRANCES PLUS A WORKING BACKUP. (NPI)
9. CONTRACTOR SHALL PROVIDE A VACUUM SWEEPER PLUS A WORKING BACKUP AT ANY LOCATION WHERE THEY ARE CROSSING THE INNER TAXILANE (A & B ETC.) OR ACTIVE TAXIWAYS. (NPI)
10. CONTRACTOR SHALL MAINTAIN EXISTING RUNWAY PAVEMENT MARKINGS IN THEIR CURRENT CONDITION. ANY DAMAGE OR DIRTYING OF THE STRIPING WILL REQUIRE THE CONTRACTOR TO REMARK THOSE AREAS AT NO ADDITIONAL COST TO THE OWNER.

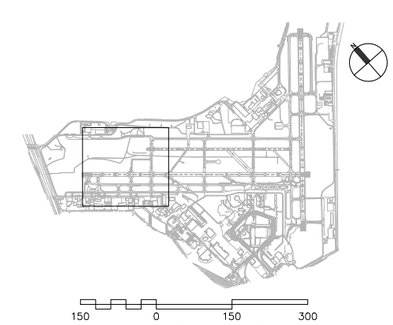

CITY OF SAN ANTONIO AVIATION DEPARTMENT

SAN ANTONIO AIRPORT SYSTEM

Kimley»Horn
KIMLEY–HORN AND ASSOCIATES, INC.
601 NW LOOP 410, SUITE 350
SAN ANTONIO, TEXAS 78216
PHONE: (210) 541–9166
TEXAS REGISTERED FIRM, NO. 928

RUNWAY 12R-30L ELECTRICAL IMPROVEMENTS AND TERMINAL AREA TAXIWAY IMPROVEMENTS (PACKAGE 4)

MICHAEL A. NORBY 87178 REGISTERED PROFESSIONAL ENGINEER
05/31/16

MARK	DATE	DESCRIPTION
1	06/10/16	ADDENDUM 4

ISSUE:

PROJECT NO:	33-0019X
FILE NAME:	33-00193-R1CO-401-D01
DRAWN BY:	CAD
CHECKED BY:	MAN
COPYRIGHT:	2016

SHEET TITLE:

OPERATIONS AND PHASING PLAN - ALTERNATE 1

C2.4

SHEET NO. 89 OF 157

K:\PHX_Aviation\191629001– San Antonio\CADD_PACKAGE 4_33–00193–R1CO–401–D01.dwg April 11, 2016 Crawford, Pat

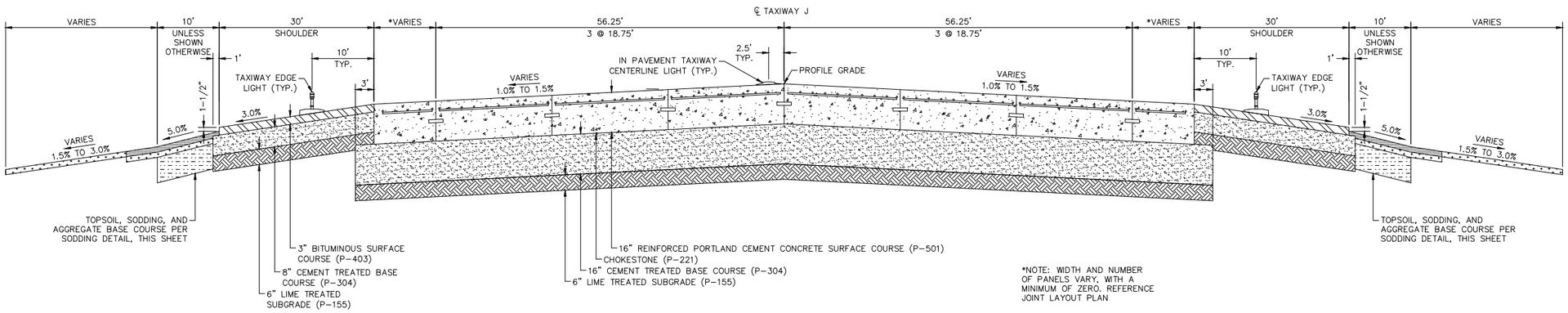

*NOTE: WIDTH AND NUMBER OF PANELS VARY, WITH A MINIMUM OF ZERO. REFERENCE JOINT LAYOUT PLAN

A / C4.2 TAXIWAY J (STA. 10+37.50 TO 11+25.00) TYPICAL SECTION

N.T.S

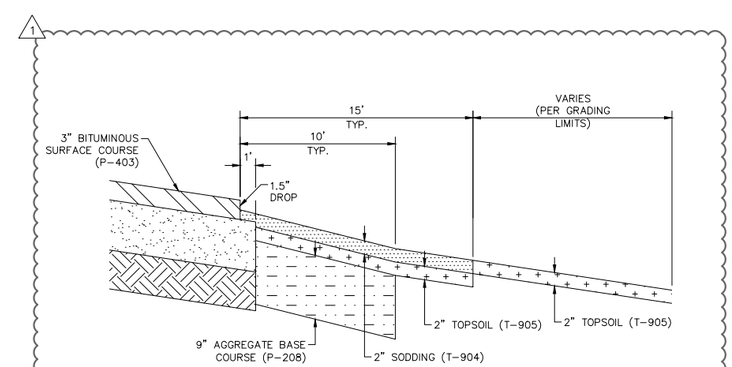

SODDING DETAIL

N.T.S

CITY OF SAN ANTONIO AVIATION DEPARTMENT

SAN ANTONIO AIRPORT SYSTEM

Kimley»Horn

KIMLEY-HORN AND ASSOCIATES, INC.
601 NW LOOP 410, SUITE 350
SAN ANTONIO, TEXAS 78216
PHONE: (210) 541-9166

TEXAS REGISTERED FIRM, NO. 928

RUNWAY 12R-30L ELECTRICAL IMPROVEMENTS AND TERMINAL AREA TAXIWAY IMPROVEMENTS (PACKAGE 4)

MICHAEL A. NORBY 87178 REGISTERED PROFESSIONAL ENGINEER

05/31/16

MARK	DATE	DESCRIPTION
1	06/10/16	ADDENDUM 4

ISSUE:

PROJECT NO:	33-0019X
FILE NAME:	_33-00193-R1CT-301-D01
DRAWN BY:	CAD
CHECKED BY:	MAN
COPYRIGHT:	2016

SHEET TITLE:

TYPICAL SECTIONS

C4.2

K:\PHX_Aviation\191629001- San Antonio\CADD_PACKAGE 4_33-00193-R1CT-301-D01.dwg April 11, 2016 Crawford, Pat

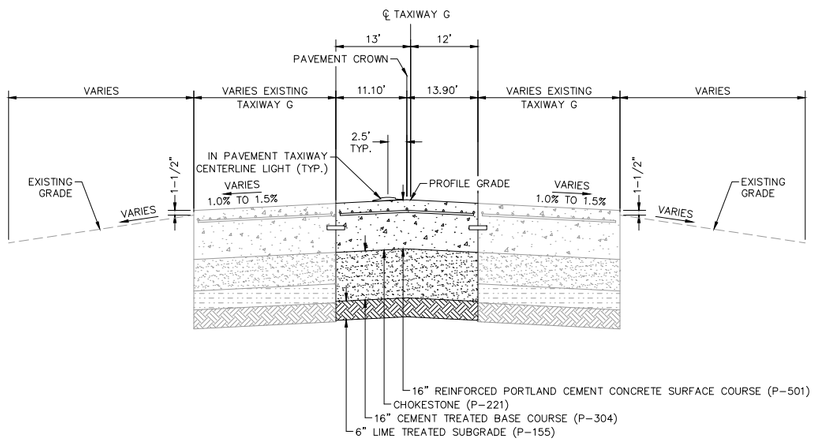

A C4.2 TAXIWAY G (STA. 252+51.61 TO 252+75.84) TYPICAL SECTION

N.T.S

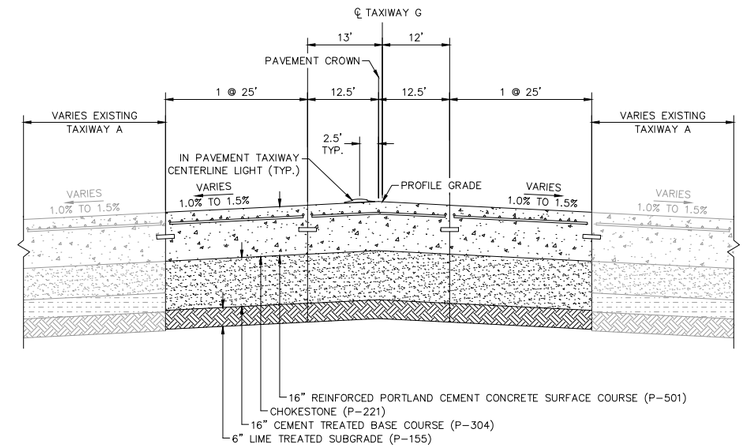

B C4.2 TAXIWAY G (STA. 255+75.65 TO 257+03.30) TYPICAL SECTION

N.T.S

GENERAL NOTES

1. THE SUBGRADE IN CUT AREAS SHALL HAVE NATURAL DENSITIES SHOWN, OR
   A. SHALL BE COMPACTED FROM THE SURFACE TO ACHIEVE THE REQUIRED DENSITIES.
   B. SHALL BE REMOVED AND REPLACED IN WHICH CASE THE MINIMUM DENSITIES FOR FILLS APPLY. SEE SPECIFICATION P-152 FOR OVER-EXCAVATION REQUIREMENTS.
2. NON-COHESIVE SOILS, FOR THE PURPOSE OF DETERMINING COMPACTION, ARE THOSE WITH A P.I. < 6.

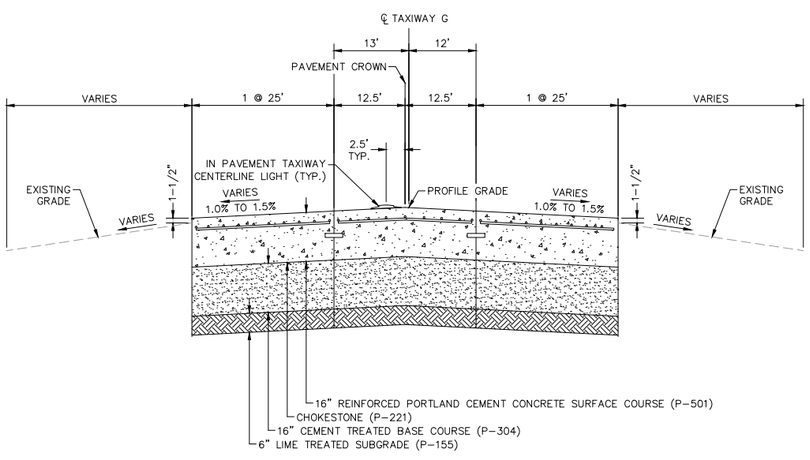

C C4.3 TAXIWAY G (STA. 257+03.30 TO 259+25.65) TYPICAL SECTION

N.T.S

1

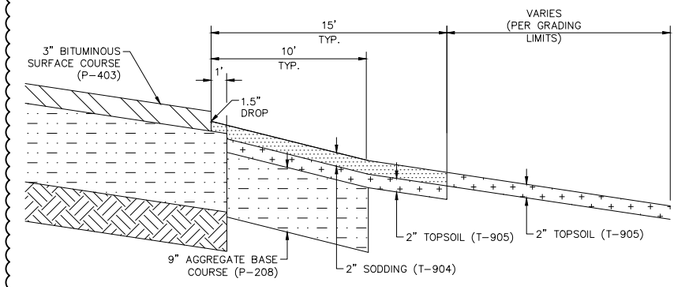

SODDING DETAIL

N.T.S

CITY OF SAN ANTONIO AVIATION DEPARTMENT

SAN ANTONIO AIRPORT SYSTEM

Kimley»Horn

KIMLEY-HORN AND ASSOCIATES, INC.
601 NW LOOP 410, SUITE 350
SAN ANTONIO, TEXAS 78216
PHONE: (210) 541-9166

TEXAS REGISTERED FIRM, NO. 928

RUNWAY 12R-30L ELECTRICAL IMPROVEMENTS AND TERMINAL AREA TAXIWAY IMPROVEMENTS (PACKAGE 4)

MICHAEL A. NORBY 87178 REGISTERED PROFESSIONAL ENGINEER 05/31/16

MARK	DATE	DESCRIPTION
1	06/10/16	ADDENDUM 4

ISSUE:

PROJECT NO:	33-0019X
FILE NAME:	_33-00193-R1CT-301-D02
DRAWN BY:	CAD
CHECKED BY:	MAN
COPYRIGHT:	2016

SHEET TITLE:

TYPICAL SECTIONS

C4.3

SHEET NO. 117 OF 157

K:\PHX_Aviation\191629001- San Antonio\CADD_PACKAGE 4_33-00193-R1CT-301-D02.dwg April 11, 2016 Crawford, Pat

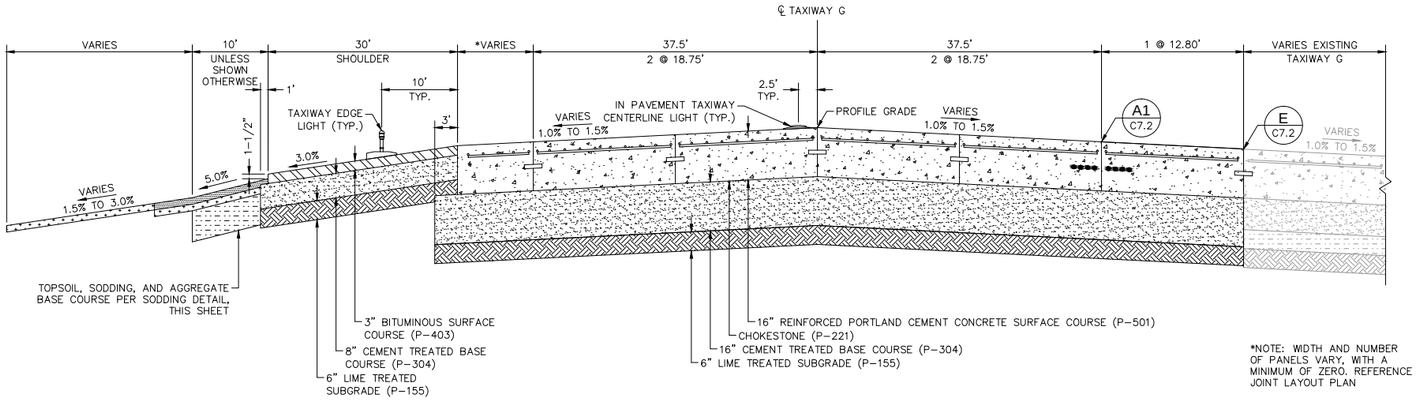

*NOTE: WIDTH AND NUMBER OF PANELS VARY, WITH A MINIMUM OF ZERO. REFERENCE JOINT LAYOUT PLAN

B C4.3 TAXIWAY G (STA. 271+55.00 TO 273+85.00) TYPICAL SECTION
TAXIWAY G (STA. 275+75.00 TO 276+55.00) TYPICAL SECTION
N.T.S

GENERAL NOTES

1. THE SUBGRADE IN CUT AREAS SHALL HAVE NATURAL DENSITIES SHOWN, OR
   A. SHALL BE COMPACTED FROM THE SURFACE TO ACHIEVE THE REQUIRED DENSITIES.
   B. SHALL BE REMOVED AND REPLACED IN WHICH CASE THE MINIMUM DENSITIES FOR FILLS APPLY. SEE SPECIFICATION P-152 FOR OVER-EXCAVATION REQUIREMENTS.
2. NON-COHESIVE SOILS, FOR THE PURPOSE OF DETERMINING COMPACTION, ARE THOSE WITH A P.I. < 6.

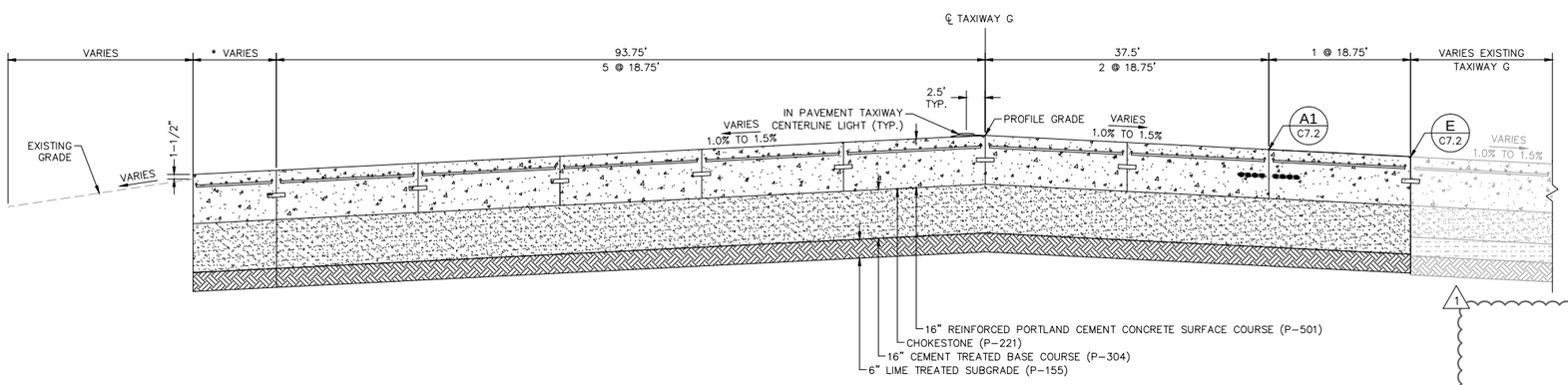

C C4.3 TAXIWAY G (STA. 273+85.00 TO 274+75.00) TYPICAL SECTION
N.T.S

1

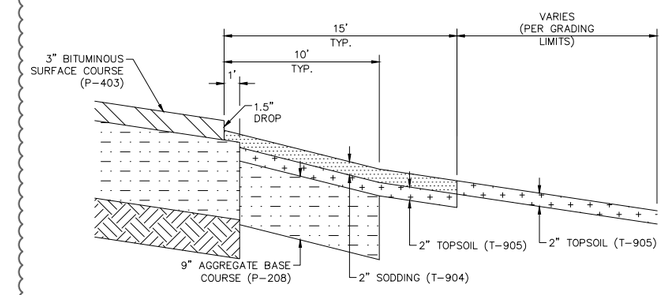

SODDING DETAIL
N.T.S

CITY OF SAN ANTONIO AVIATION DEPARTMENT

SAN ANTONIO AIRPORT SYSTEM

Kimley»Horn

KIMLEY-HORN AND ASSOCIATES, INC.
601 NW LOOP 410, SUITE 350
SAN ANTONIO, TEXAS 78216
PHONE: (210) 541-9166

TEXAS REGISTERED FIRM, NO. 928

RUNWAY 12R-30L ELECTRICAL IMPROVEMENTS AND TERMINAL AREA TAXIWAY IMPROVEMENTS (PACKAGE 4)

MICHAEL A. NORBY 87178 REGISTERED PROFESSIONAL ENGINEER
05/31/16

MARK	DATE	DESCRIPTION
1	06/10/16	ADDENDUM 4

ISSUE:

PROJECT NO:	33-0019X
FILE NAME:	_33-00193-R1CT-301-D03
DRAWN BY:	CAD
CHECKED BY:	MAN
COPYRIGHT:	2016

SHEET TITLE:

TYPICAL SECTIONS

C4.4

K:\PHX_Aviation\191629001- San Antonio\CADD_PACKAGE 4_33-00193-R1CT-301-D03.dwg April 11, 2016 Crawford, Pat

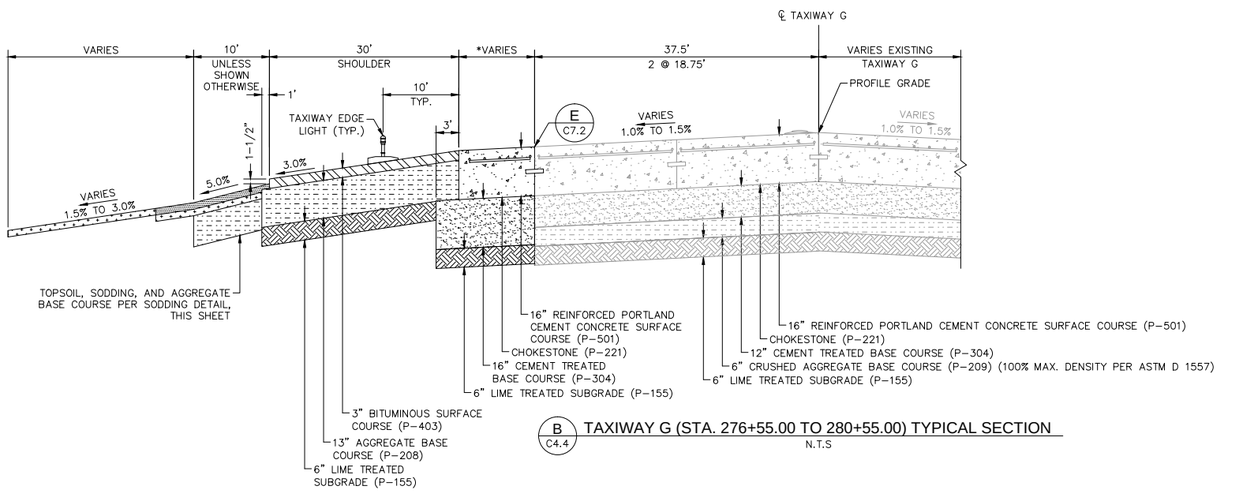

*NOTE: WIDTH AND NUMBER OF PANELS VARY, WITH A MINIMUM OF ZERO. REFERENCE JOINT LAYOUT PLAN

B C4.4 TAXIWAY G (STA. 276+55.00 TO 280+55.00) TYPICAL SECTION

N.T.S

GENERAL NOTES

1. THE SUBGRADE IN CUT AREAS SHALL HAVE NATURAL DENSITIES SHOWN, OR

   A. SHALL BE COMPACTED FROM THE SURFACE TO ACHIEVE THE REQUIRED DENSITIES.

   B. SHALL BE REMOVED AND REPLACED IN WHICH CASE THE MINIMUM DENSITIES FOR FILLS APPLY. SEE SPECIFICATION P-152 FOR OVER-EXCAVATION REQUIREMENTS.

2. NON-COHESIVE SOILS, FOR THE PURPOSE OF DETERMINING COMPACTION, ARE THOSE WITH A P.I. < 6.

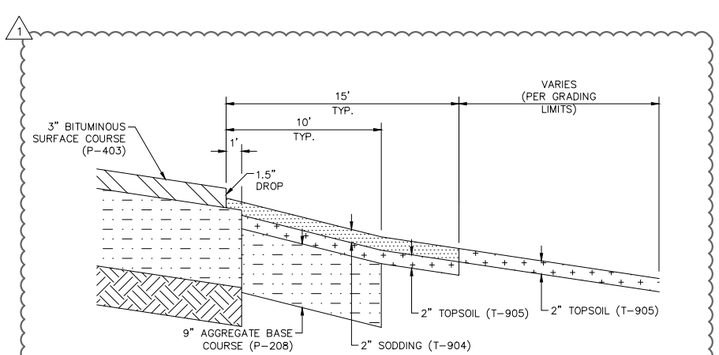

SODDING DETAIL

N.T.S

CITY OF SAN ANTONIO AVIATION DEPARTMENT

SAN ANTONIO AIRPORT SYSTEM

Kimley»Horn

KIMLEY-HORN AND ASSOCIATES, INC.
601 NW LOOP 410, SUITE 350
SAN ANTONIO, TEXAS 78216
PHONE: (210) 541-9166

TEXAS REGISTERED FIRM, NO. 928

RUNWAY 12R-30L ELECTRICAL IMPROVEMENTS AND TERMINAL AREA TAXIWAY IMPROVEMENTS (PACKAGE 4)

MICHAEL A. NORBY 87178 REGISTERED PROFESSIONAL ENGINEER

05/31/16

MARK	DATE	DESCRIPTION
1	06/10/16	ADDENDUM 4

ISSUE:

PROJECT NO:	33-0019X
FILE NAME:	_33-00193-R1CT-301-D03
DRAWN BY:	CAD
CHECKED BY:	MAN
COPYRIGHT:	2016

SHEET TITLE:

TYPICAL SECTIONS

C4.5

K:\PHX_Aviation\191629001- San Antonio\CADD_PACKAGE 4_33-00193-R1CT-301-D03.dwg April 11, 2016 Crawford, Pat

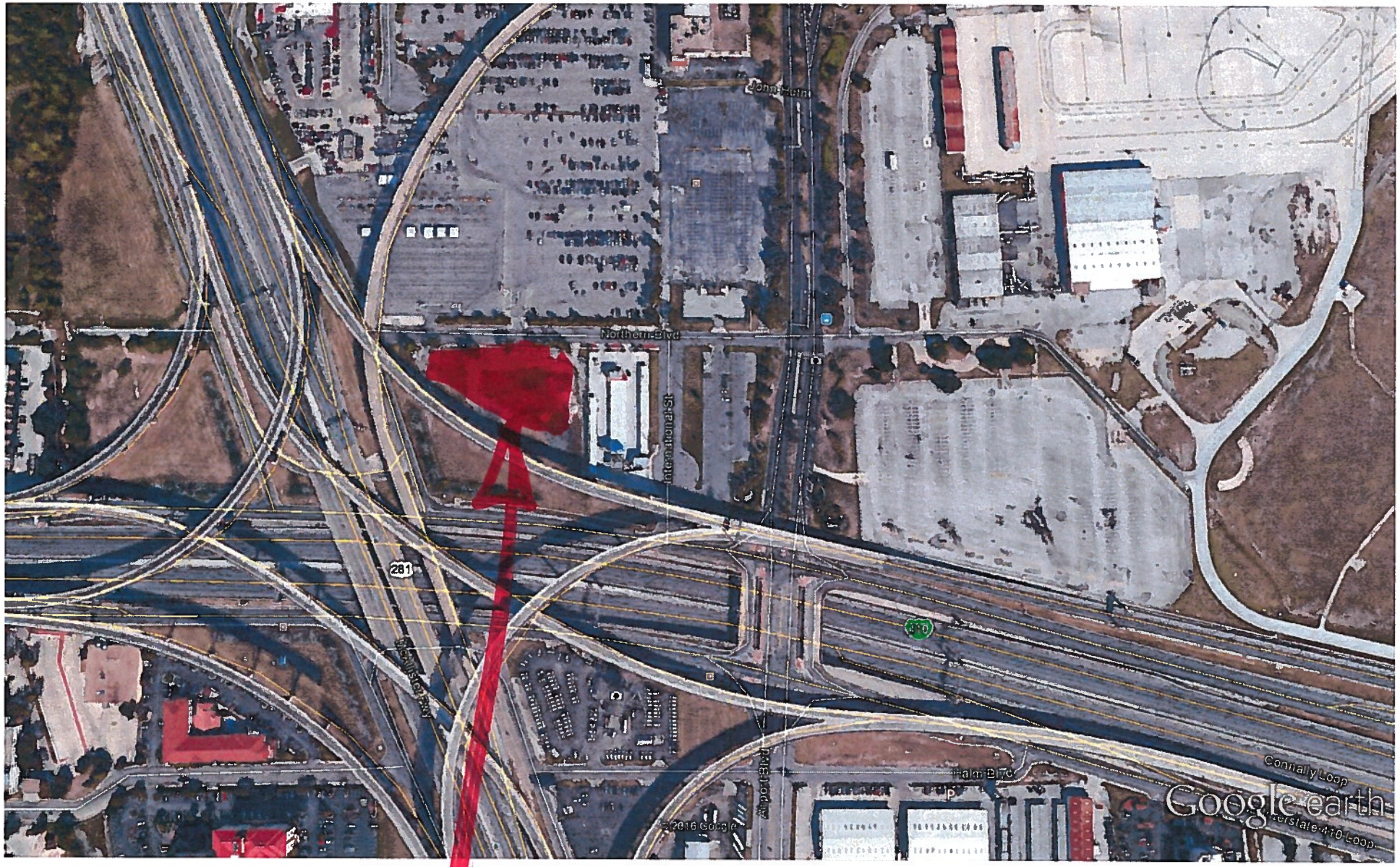

Google earth

feet 2000

meters 600