CITY OF SAN ANTONIO
TRANSPORTATION & CAPITAL IMPROVEMENTS

ADDENDUM NO. 1

PROJECT NAME: NORMOYLE CENTER AND PARK IMPROVEMENTS

DATE: 08/06/2014

This addendum should be included in and be considered part of the plans and specifications for the name of the project. The contractor shall be required to sign an acknowledgement of the receipt of this addendum and submit with their bid.

TCI PROJECT NO.: 40-00349 and 40-00378

Q1. Bid documents refer to the City of San Antonio Information Technology Services Standards. Where would I be able to get a copy of these standards?

R1. The City of San Antonio's Structured Cabling Infrastructure Guidelines are provided as part of this Addendum *for reference only.*

Q2. I do not see anywhere in the ITB or standard instructions to bidders where it states the number of copies to be turned in. Do we only need to submit one original? Please clarify.

R2. Only one signed copy of the bid documents required on 010 Formal Invitation for Bids are required.

Q3. ALLOWANCES: Paragraph 1.5.A in Section 01 26 00 is for Allowances. However, there are no Allowances listed in the Section. Are there any Allowances on this project?

R3. There are no allowances on this project.

Q4. GYMNASIUM: Finish Plan on Sheet A1.3 does not have a finish designated for the gymnasium floor. Is the existing finish to remain?

R4. The existing flooring in the Gymnasium is to remain.

Q5. OUTDOOR BASKETBALL COURTS: Key Note #1 on SD/1.01 calls for re-surfacing the area where 2 of the existing Tennis Courts will remain located. However, it does not indicate re-surfacing the area where the 2 new Basketball Courts are to be located, which will take the place of 2 other tennis courts. Are both areas to be re-surfaced or just the Tennis Court area?

R.5 The entire existing tennis court area is to be resurfaced. This includes the area where the new basketball courts will be located.

Plan changes: Basketball Court Surfacing Colors
Basketball court will be dark green with red at the center circle and free throw area.
Refer to attached drawings for clarification.

Q6. SOIL & CONCRETE TESTING: From what we can see in the specifications, it appears Testing is to be paid for by the GC, not the Owner. Is this correct?

R6. No, the Owner will engage an independent testing agency for the soil and concrete testing.

Q7. HVAC TESTING & BALANCING: From what we can see in the specifications, it appears HVAC Testing & Balancing is to be paid for by either the GC or the GC's HVAC contractor, not the Owner. Is this correct?

R7. Neither, the Owner will engage an independent HVAC Testing & Balancing company on this project.

Q8. BUILDING PERMIT: From what we can see in the specifications, it appears THE Building Permit is to be paid for by the GC, not the Owner. Is this correct?

R8. No, the Owner will pay for the building permit.

Q9. TIME EXTENSION FOR SEVERAL BID FORMS: On bid day, the GC receives many bids right up to bid time, which makes it difficult to fill out multiple bid forms. The Bid Form for this project requires Part A, Part B, 5 Alternate Prices and 26 Unit Prices. In addition there is a Respondent/Vendor Subcontracting Waiver Request Form that is 3 pages long. Is it possible for the Unit Prices and the Respondent/Vendor Subcontracting Waiver Request Form to be turned in within 24 hours of bid time?

R9. We are unable to accommodate this request at this time.

Q10. Drawing page A1.2 interior elevations for RR walls does not state what wall tile to use (WT-1, WT-2, WT-3 & Wt-4).

R10. Restroom walls are WT-1 + WT-2 as denoted on enlarged finish plan sheet A1.4. Interior elevations shall govern. Enlarged restroom plan Sheet 1.A1.4: change P-1 + P-4 to WT-1 + WT-2 at Men 108 and Women 110 as denoted in interior elevations.

Q11. Is there a finish schedule?

R11. Finish schedule is denoted on Sheet A1.3 + A1.4. Coordinate with associated finish plans.

Q12. Where are B-4 tile base and WT-5 wall tile to be installed?

R12. Refer to enlarged finish plans sheet A1.4 for locations. B-4 tile base is denoted at restrooms, utility and janitor rooms. WT-5 wall tile is denoted at walls adjacent to floor sinks at utility and janitor.

Approved Substitutions for Bid Package B – Park Improvements:

1. Shade Structure - Superior Shade as provided by Hunter Knepshield of Texas, Inc., 1-800-451-4138.

2. Sport Court Surfacing – Plexipave by California Products Corp.

Note: Addenda Acknowledgement Form for Addendum _1_ is attached herein. This form must be signed and submitted with the bid package.

CITY OF SAN ANTONIO
TRANSPORTATION & CAPITAL IMPROVEMENTS

RECEIPT OF ADDENDUM NUMBER(S) 1 IS HEREBY ACKNOWLEDGED FOR PLANS AND SPECIFICATIONS FOR CONSTRUCTION OF **NORMOYLE CENTER 40-00349 AND PARK IMPROVEMENTS 40-00378**

FOR WHICH BIDS WILL BE OPENED ON **TUESDAY, AUGUST 12, 2014 AT 2:00 P.M.**

THIS ACKNOWLEDGEMENT MUST BE SIGNED AND RETURNED WITH THE BID PACKAGE.

Company Name: _____

Address: _____

City/State/Zip Code: _____

Date: _____

_____
Signature

_____
Print Name/Title

City of San Antonio

Structured Cabling Infrastructure Guideline

For Facility Construction or Renovations

Version 1.0

TABLE OF CONTENTS

PART 1 - DOCUMENT PURPOSE 5

PART 2 - DOCUMENT HISTORY 5

PART 3 - INDUSTRY STANDARDS 6

PART 4 - CONTRACTOR QUALIFICATIONS 7

PART 5 - WARRANTY ON PARTS AND LABOR. 7

PART 6 - NOMENCLATURE 7

PART 7 - CITY INFRASTRUCTURE STANDARDS 7

7.01 Telecommunications Spaces 7

A. Main Distribution Frame (MDF) 8

1. Description 8

2. Architectural Requirements 8

3. HVAC Requirements 10

4. Lighting Requirements 10

5. Power Requirements 10

6. Equipment Cabinets / Racks and Cable Management Requirements 11

B. Intermediate Distribution Frame (IDF) 12

1. Description 12

2. Architectural Requirements 12

3. HVAC Requirements 14

4. Lighting Requirements 14

5. Power Requirements 15

6. Equipment Cabinets / Racks and Cable Management Requirements 16

7.02 Entrance Pathways and Conduits 16

A. Design Principles 16

B. Service Provider Conduits 17

C. Campus Serving Conduits 17

D. Building Entrance for Large Campus 18
7.03 Cable Management In Telecommunications Spaces 18
A. Equipment Cabinets / Equipment Racks 18
B. Overhead Cable Management 18
7.04 Cable Support in Pathways 19
A. Main Cable Pathway 19
B. Sleeves and Penetrations 19
C. Workstation Rough-ins and local power (Typ.) 20
7.05 Backbone Cabling 21
A. Service Provider Demarc 21
B. Inter-building Backbone Cabling (Campus) 22
1. Permanent Structures 22
a. Copper 22
b. Fiber 22
C. Intra-building Backbone Cabling 22
1. Copper 22
2. Fiber 23
7.06 Horizontal Cabling 23
A. Workstation Cable 23
B. Workstation Configurations 23
1. Office Workstation 23
2. Ceiling-Mounted Projector Outlet 24
3. Audio/Visual Control System (Control Panel) 24
4. Wireless Access Point Outlet 24
5. IP Camera Outlet 25
C. Patch Cables 25
7.07 Grounding 27
7.08 Labeling 27

7.09 Testing 29
7.10 As-Built Documentation 29
PART 8 - SUMMARY OF STANDARDS 29
8.01 Summary 29
PART 9 - EXHIBITS 30
EXHIBIT 1 - ACCEPTABLE MANUFACTURERS / PRODUCTS 31
EXHIBIT 2 – TYPICAL DETAILS 40

PART 1 - DOCUMENT PURPOSE

1.01 The City of San Antonio Structured Cabling Infrastructure Standard is a guideline for structured cabling infrastructure and the associated spaces to be applied by the design team for new or renovated facilities. Information herein is applicable to the Technology Consultant, Architect, MEP, and contractors, and shall be taken into account for each project by all team members.

A. The standards set forth parameters for the technical system in addition to the site and building requirements to facilitate a properly-installed standards-compliant structured cable system, organized as follows;

1. Telecommunications Spaces; Architectural, HVAC, Power, Entrance Pathways and Conduits

2. System Requirements; Cable Management in Telecommunications Spaces, Cable Support in Pathways, Backbone Cabling, Horizontal Cabling, Grounding, Labeling, Testing, and As-Built Documentation.

3. Telecommunications Diagrams

1.02 The standard addresses infrastructure for typical buildings and is not intended for the design of data centers or specialty facilities, of which should be considered on a case-by-case basis.

1.03 Designers shall not deviate from this standard without explicit written approval from the City of San Antonio Information Technology Services Department.

1.04 Any deviations shall immediately be brought to the attention of the owner's representative in writing for resolution.

1.05 Where specific product brands are mentioned, an equivalent will be considered following an official submission of product literature and written acceptance by the City of San Antonio Information Technology Services Department.

1.06 Where means, methods, and best practices are mentioned, contractor shall follow the manufacturers' and owner's requirements, industry standards, or code, whichever is most stringent.

1.07 Basic contractor qualifications are set forth, but may be made more stringent as applicable to each project based upon size and scope.

1.08 A Division 27 specification and T-Series drawings for the Structured Cabling System shall be commissioned and issued by the Architect during the design phases for each facility or project.

PART 2 - DOCUMENT HISTORY

2.01 This document supersedes all previous standards which have been fully reevaluated and described herein by the City of San Antonio Information Technology Services Department.

2.02 The contents of the standards were derived by the assembly and input from the City of San Antonio Information Technology Services Department.

PART 3 - INDUSTRY STANDARDS

3.01 The following industry standards shall be adhered to unless specifically directed otherwise by the City of San Antonio Information technology Services Department. The list is not all-inclusive and does not alleviate compliance with the latest applicable standards, codes, and best practices:

A. TIA-568-C.0 Generic Telecommunications Cabling for Customer Premises

B. TIA-568-C.1 Commercial Building Telecommunication Cabling Standards – Part 1 General Requirements (2008)

C. TIA-568-C.2 Balanced Twisted-Pair Telecommunications Cabling and Components Standard (2009)

D. TIA-568-C.3 Optical Fiber Cabling Components Standard (2009)

E. TIA-569-B Commercial Building Standard for Telecommunications Pathways and Spaces - (October 2004)

F. TIA-598-C Optical Fiber Cable Color Coding - (January 2005)

G. TIA/EIA-606-B Administration Standard for Commercial Telecommunications Infrastructure - (May 2012)

H. ANSI J-STD-607-B Commercial Building Grounding and Bonding Requirements for Telecommunications - (October 2011)

I. TIA-758-A Customer-Owned Outside Plant Telecommunications Infrastructure Standard - (August 2004)

J. TIA-526-7 Measurement of Optical Power Loss of Installed Single-Mode Fiber Cable Plant – OFSTP-7 - (February 2002)

K. TIA-526-14-A Optical Power Loss Measurements of Installed Multimode Fiber Cable Plant – OFSTP-14 - (August 1998)

L. AIA

M. Local Building Code

N. NEC

O. ISO

P. ANSI

Q. FCC

R. UL

S. OSHA

T. NFPA

U. NEMA

PART 4 - CONTRACTOR QUALIFICATIONS

4.01 Contractor and staff shall be a current authorized Panduit Certified Installers and certified by Panduit to provide and furnish a 20-year performance warranty for structured cabling and connectivity components.

4.02 Contractor and staff shall possess relevant past-experience and references for a minimum of (5) projects of similar size and scope to that of the City of San Antonio.

4.03 Contractor's Project Manager shall be a RCDD in good standing and shall provide Certificate.

4.04 Contractor shall have a local office within a 75-mile radius of the project site

4.05 Sub-contractors to the primary structured cabling contractor shall meet the same requirements for the primary structured cabling contractor as identified above.

PART 5 - WARRANTY ON PARTS AND LABOR.

5.01 The contractor shall furnish a 20-year performance warranty from Panduit for the structured cabling and connectivity components.

5.02 All labor and workmanship shall carry a minimum warranty period of (1) year from the date of final system acceptance.

5.03 Defects in material or workmanship appearing within this period of time, shall be promptly repaired without cost to the City of San Antonio.

PART 6 - NOMENCLATURE

6.01 Main Distribution Frame (MDF) – An environmentally controlled centralized architectural space for housing telecommunications equipment that usually serves as the demarcation point for service providers, and houses the backbone terminations for cross-connection and distribution to Intermediate Distribution Frames.

6.02 Intermediate Distribution Frames (IDF) – An environmentally controlled architectural space for housing telecommunications equipment and backbone terminations for cross-connection and distribution to the MDF and end-user workstations.

PART 7 - CITY INFRASTRUCTURE STANDARDS

7.01 Telecommunications Spaces

A. Main Distribution Frame (MDF)

1. Description

a. The MDF is a telecommunications space that serves a building or multi-building facility or campus. There is only (1) on each campus.

b. The MDF houses the entrance conduits, terminations, and cross connections for all incoming inter-building backbone cabling from the IDFs in other buildings on the campus and the intra-building backbone cabling from the IDFs in the building in which it resides, and cross-connects to user workstations.

c. Wall and floor space shall be reserved for service provider demarcation equipment and incoming infrastructure terminations.

d. Campus distribution network equipment, servers, and other centralized telecommunications related equipment will reside in the MDF.

e. The MDF may share space with other systems such as security panels, paging systems, and CATV cabling. Space allocation for other systems shall be coordinated with the applicable disciplines after approval from the City of San Antonio Information Technology Service Department. All coordination shall be completed prior to installation.

f. Fire alarm panels and building control panels shall not be located inside the MDF. Space allocation for these systems needs to occur outside of the MDF.

g. The MDF shall not be used for storage, serve as a mechanical or electrical distribution space, nor shall it have within its space main electrical feeds, electrical switch gear, transformers, and water or sprinkler main lines.

h. The layout of cabinets, equipment racks, wall fields, and cable management shall be as indicated on the attached diagrams.

2. Architectural Requirements

a. The MDF shall be a minimum of 150 square feet with minimum clear lineal walls of at least 10 feet by 15 feet. The size of the MDF shall be coordinated with and approved by the City of San Antonio Information Technology Services Department during the design.

b. All walls inside the MDF shall go to deck. When walls are drywall they shall be double layered drywall on both sides to help reduce the risk of unauthorized entry.

c. The MDF Room shall be centrally located.

d. The floor finish shall be sealed bare concrete or VCT.

e. The MDF shall not contain windows.

f. The MDF shall not be located adjacent to or below restrooms or other water-based facilities, or sources of EMI and mechanical vibration.

g. All walls shall be covered with 4-feet x 8-feet x ¾-inch AC Grade Void Free Fire Retardant Plywood, aligned vertically starting at 12 inches above the finished floor. The plywood shall be installed with the "A" grade side exposed and the "C" grade side against the building or structure. The plywood shall be painted with two coats of fire retardant paint and one stamp from each sheet shall be masked during the painting and uncovered after the paint has dried so the fire rated plywood stamps are visible for inspection.

h. The minimum ceiling height shall be 9-feet above finished floor with the following preferences of finishes.

   1) No ceiling is the preferred finish

   2) Hard ceiling is acceptable if leaving open to structure is not possible.

   3) The last alternative is a lift-out ceiling. If a lift-out ceiling tile is required this shall be coordinated and approved by the City of San Antonio Information Technology Services Department during the design process. If this option is approved it is recommended the ceiling height inside the MDF room be higher than the ceiling height in the corridor outside the MDF so the cables entering into the MDF do not have to pass through the lift-out ceiling inside the MDF room.

i. Entry to the space shall be through a minimum 36-inch by 80-inch clear door opening that swings outward. Door shall be solid core or steel and shall not have any windows. The door shall securely lock and access shall only be by City of San Antonio Information Technology Services Department-approved personnel. The door shall open to an interior hallway or space, it is not recommended the door open to the exterior of the building.

j. The MDF door shall be equipped with a minimum of a City of San Antonio Information Technology Services Department approved cipher lock. When an access control security system is available, the entrance to the MDF shall be equipped with a card reader and electrified door hardware.

k. Fire suppression for the MDF shall be determined by the specific code requirements for the fire protection scheme of the overall building. If a fire suppression system is designed, it shall be

designed to avoid running distribution over the MDF equipment cabinets, racks and equipment.

3. HVAC Requirements

   a. The MDF shall be serviced by a dedicated unit that is part of the building's main system and be equipped with a Split DX system through the wall above the door which cools only when the building HVAC is inadequate or not running. The unit shall maintain a constant 24/7 cooled environment between 68° and 77° F with relative humidity of 40% - 55%.

   b. Changes in temperature and humidity shall be kept to around 1 percent.

   c. The minimum HVAC load shall be designed to displace 12KW of power, or 3.5 Tons, and shall be coordinated with the City of San Antonio Information Technology Services Department during the design and designed to load if the known load is greater at the time of design.

   d. It is recommended the MDF maintain the stated temperature and humidity in the event of building power outages or primary HVAC system failure.

   e. Air delivery shall be aligned in the front of the equipment rows and returns at the rear of the equipment rows when possible.

   f. HVAC sensors and controls shall be located in the MDF at 5-ft AFF.

   g. A hard-wired wall mounted thermostat shall be located inside the MDF Room.

   h. HVAC systems shall be alarmed for power loss, high and low temperature, high and low humidity, smoke detection, compression failures and water flooding.

   i. A simplex data drop shall be installed within 12 inches of the unit so it can be incorporated into the Building Automation System (BAS).

4. Lighting Requirements

   a. Florescent light fixtures shall be at least 24 inches above the top of the highest cabinet, rack or cable runway (approximately 84 inches), 36 inches is recommended.

   b. Lighting shall be a minimum of 50 foot candles at 2 feet above the floor in the entire space.

   c. The MDF shall be equipped with emergency lighting to keep the space lit during power outages.

5. Power Requirements

a. All electrical service outlets shall be labeled with the associated panel and circuit information.

b. Power shall be in two categories: dedicated and convenience.

c. Dedicated

1) The MDF shall be equipped with a minimum of (2) dedicated 208 VAC 20 amp electrical circuits terminated in separate J-boxes and (1) dedicated 120 VAC 20 Amp circuit mounted above each equipment cabinet or rack.

a) The (2) 208 VAC J-boxes shall be mounted to a uni-strut above the equipment cabinets or racks and shall be provided with a 7-foot “SO Type” cord with a female NEMA L6-20R receptacle on the end.

b) The (1) 120 VAC J-box shall be mounted to a uni-strut above the equipment cabinets or racks and shall be provided with a 7-foot “SO Type” cord with a female NEMA 5-20R receptacle on the end.

c) The originating electrical panel shall be properly sized for the loads calculated and shall be located in the nearest Electrical Room.

2) Additional power circuits to be allocated to security, paging CATV, and service provider equipment shall be considered and coordinated at the time of building design.

3) Power distribution to the cabinets shall be achieved by installing rack mounted PDUs.

d. Convenience

1) The MDF shall be equipped with 120 volt 20 Amp duplex NEMA 5-20R receptacles, with maximum (3) receptacles on each circuit. The originating electrical panel shall be equipped with a 20 Amp breaker per circuit.

2) A duplex receptacle shall be spaced at least 1 foot from an adjacent wall and every 6 feet thereafter. A minimum of (1) duplex receptacle shall be placed in each wall and be flush mounted to the finished wall surface at 18 inches above finished floor.

6. Equipment Cabinets / Racks and Cable Management Requirements

a. The MDF shall be equipped with a minimum (2) equipment cabinets or equipment racks. Coordination with and approval by City of San

Antonio Information Technology Services Department during the design is required to determine with equipment cabinets or equipment racks shall be utilized.

b. The MDF shall be equipped with cable runway encircling the room at 84-86 inches above the finished floor, and crossing the room above the equipment cabinets or racks (1) time.

1) Cable runway shall not be secured to the top of the equipment cabinets.

2) A vertical section of cable runway shall be attached to the wall board to manage backbone and service provider cables as they transition from the entrance conduits to the overhead cable runway.

B. Intermediate Distribution Frame (IDF)

1. Description

a. An IDF is a telecommunications space that resides in each building that requires more than a single telecommunications space from which to terminate horizontal workstation cables. There may be multiple IDFs in each building as required to maintain horizontal cable distances of 295 feet for the permanent link.

b. An IDF houses the terminations and cross connections for the intra or inter-building cabling from the MDF and the horizontal user workstation cabling in the area of the building that it serves.

c. Building workstation access network equipment will reside in the IDF.

d. The IDF may share space with other systems such as security panels and paging systems. Space allocation for other systems shall be coordinated with the applicable disciplines.

e. Fire alarm panels and building control panels shall not be located inside the IDF. Space allocation for these systems needs to occur outside of the IDF.

f. The IDF shall not be used for storage, serve as a mechanical or electrical distribution space, nor shall it have within its space main electrical feeds, electrical switch gear, transformers, water or main sprinkler lines.

g. The layout of cabinets, equipment racks, wall fields, and cable management shall be as indicated on the attached diagrams.

2. Architectural Requirements

a. The IDF shall be a minimum of 100 square feet with minimum clear lineal wall lengths of at least 10 feet by 10 feet.

b. All walls shall go to deck. When walls are drywall they shall be double layered drywall on both sides to help reduce the risk of unauthorized entry.

c. The floor finish shall be sealed bare concrete or VCT.

d. The IDF shall not contain windows.

e. IDFs shall be arranged in a stacked formation in multi-story buildings, and not be located next to or below restrooms or other water-based facilities, or sources of EMI and mechanical vibration.

f. All walls shall be covered with 4-feet x 8-feet x ¾-inch AC Grade Void Free Fire Retardant Plywood, aligned vertically starting at 12 inches above the finished floor. The plywood shall be installed with the "A" grade side exposed and the "C" grade side against the building or structure. The plywood shall be painted with two coats of fire retardant paint and one stamp from each sheet shall be masked during the painting and uncovered after the paint has dried so the fire rated plywood stamps are visible for inspection.

g. The minimum ceiling height shall be 9-feet above finished floor with the following preferences of finishes.

    1) No ceiling is the preferred finish

    2) Hard ceiling is acceptable if leaving open to structure is not possible.

    3) The last alternative is a lift-out ceiling. If a lift-out ceiling tile is required this shall be coordinated and approved by the City of San Antonio Information Technology Services Department during the design process. If this option is approved it is recommended the ceiling height inside the MDF room be higher than the ceiling height in the corridor outside the MDF so the cables entering into the MDF do not have to pass through the lift-out ceiling inside the MDF room.

h. Entry to the space shall be through a minimum 36-inch by 80-inch clear door opening that swings outward. Door shall be solid core or steel and shall not have any windows. The door shall securely lock and access shall only be by City of San Antonio Information Technology Services Department-approved personnel. The door shall open to an interior hallway or space, it is not recommended the door open to the exterior of the building.

i. The IDF door shall be equipped with a minimum of a City of San Antonio Information Technology Services Department approved cipher lock. When an access control security system is available, the entrance to the IDF shall be equipped with a card reader and electrified door hardware.

j. Fire suppression for the IDF shall be determined by the specific code requirements for the fire protection scheme of the overall building. If a fire suppression system is designed, it shall be designed to avoid running distribution over the IDF equipment cabinets, racks and equipment.

3. HVAC Requirements

a. The IDF shall be serviced by a dedicated unit that is part of the building's main system and be equipped with Split DX system through the wall above the door which cools only when the building HVAC is inadequate or not running. The unit shall maintain a constant 24/7 cooled environment between 68° and 77° F with relative humidity of 40% - 55%.

b. Changes in temperature and humidity shall be kept to around 1 percent.

c. The minimum HVAC load shall be designed to displace 4KW of power, or 1 Ton, and shall be coordinate with the City of San Antonio Information technology Services Department and designed to load if the load is greater and known at the time of design.

d. It is recommended that the IDF maintain the stated temperature and humidity in the event of building power outages or primary HVAC system failure.

e. Air delivery shall be aligned in the front of the equipment rows and returns at the rear of the equipment rows.

f. HVAC sensors and controls shall be located in the IDF at 5-ft AFF.

g. A hard-wired wall mounted thermostat shall be located inside the IDF Room.

h. HVAC systems shall be alarmed for power loss, high and low temperature, high and low humidity, smoke detection, compression failures and water flooding.

i. A simplex data drop shall be installed within 12 inches of the unit so it can be incorporated into the Building Automation System (BAS).

4. Lighting Requirements

a. Florescent light fixtures shall be at least 24 inches above the top of the highest cabinet, rack or cable runway, 36 inches is recommended.

b. Lighting shall be a minimum of 50 foot candles at 2 feet above the floor in the entire space.

c. The IDF shall be equipped with emergency lighting to keep the space lit during power outages.

5. Power Requirements

a. All electrical service outlets shall be labeled with the associated panel and circuit information.

b. Power for the IDF shall be in two categories: dedicated and convenience.

c. Dedicated

1) The IDF shall be equipped with a minimum of (2) dedicated 208 VAC 20 amp electrical circuits terminated in separate J-boxes and (1) dedicated 120 VAC 20 Amp circuit mounted above each equipment cabinet or rack.

a) The (2) 208 VAC J-boxes shall be mounted to a uni-strut above the equipment cabinets or racks and shall be provided with a 7-foot “SO Type” cord with a female NEMA L6-20 R receptacle on the end.

b) The (1) 120 VAC J-box shall be mounted to a uni-strut above the equipment cabinets or racks and shall be provided with a 7-foot “SO Type” cord with a female NEMA 5-20 R receptacle on the end.

c) The originating electrical panel shall be properly sized for the loads calculated and shall be located in the nearest Electrical Room.

2) Additional power circuits to be allocated to security, paging, and service provider equipment shall be considered and coordinated at the time of building design.

3) Power distribution to the cabinets shall be achieved by installing rack mounted PDUs.

d. Convenience

1) The IDF shall be equipped with 20 Amp duplex NEMA 5-20R receptacles, with maximum (3) receptacles on each circuit. The originating electrical panel shall be equipped with a 20 Amp breaker per circuit.

2) A duplex receptacle shall be spaced at least 1 foot from an adjacent wall and every 6 feet thereafter. A minimum of (1)

duplex receptacle shall be placed in each wall and be flush mounted to the finished wall surface at 18 inches above finished

6. Equipment Cabinets / Racks and Cable Management Requirements

   a. The IDF shall be equipped with a minimum (2) equipment cabinets or equipment racks. Coordination with and approval by City of San Antonio Information Technology Services Department during the design is required to determine with equipment cabinets or equipment racks shall be utilized.

   b. The IDF shall be equipped with cable runway encircling the room at 84-86 inches above the finished floor, and crossing the room above the equipment cabinets or racks (1) time.

      1) Cable runway shall not attach to the top of the equipment cabinets.

      2) A vertical section of cable runway shall be attached to the wall board to manage backbone and service provider cables as they transition from the entrance conduits to the overhead cable runway.

7.02 Entrance Pathways and Conduits

A. Design Principles

1. Pathways and conduits are described herein with regard to capacity, function, and basic design principles and shall be designed by the MEP in accordance with NEC and EIA/TIA-758, Customer-Owned Outside Plant Telecommunications Cabling.

2. Telecommunications Conduit Systems shall:

   a. Be Schedule 80 when placed under ground.

   b. Contain a minimum of (3) 3-inch 3-Cell Maxcell fabric innerducts inside each conduit. Coordination with and approval by the City of San Antonio Information Services Technology Department is required to determine the exact quantity and size of the Maxcell innerducts inside each conduit.

   c. Contain no more than the equivalent of (2) 90 degree bends between pull boxes.

   d. Maintain a minimum bend radius of 10 times the diameter of the conduit.

   e. Not exceed 40 percent fill ratio.

   f. Be placed at a minimum depth of 36-inches from the top of the conduit to the finished grade with 3-inches of compacted sand above and below the buried conduit and an orange metallic tracer warning

tape stenciled “TELECOMMUNICATIONS” 12-inches below grade throughout the entire pathway.

g. Be interrupted by an adequately sized manhole or pull box at least every 600 feet for sections containing up to (1) 90 degree of bend, and at least every 350 feet for sections with the equivalent of (2) 90 degree bends.

1) Manholes and pull boxes shall be of adequate depth for conduits to enter from the side of the pull box and not be required to sweep up into the bottom of box.

2) Manholes shall have a minimum size of 12 feet long 6 feet wide and 7 feet high.

3) Pull boxes shall be a minimum f 24 inches wide, 48 inches long and 30 inches tall.

4) All accessories such as racking, grounding and bonding, ladders and ancillary equipment shall be provided

5) All covers shall be stenciled with “**COSA COMMUNICATIONS**”.

6) Manholes and pull boxes shall be designed to ensure proper construction types and load ratings (i.e., traffic bearing) are observed and utilized based on the location of the pull boxes.

h. Stub up into the MDF and/or IDF at 4-inches above the finished floor, no more than 2-inches from the finished wall and installed parallel to the finished wall.

i. Contain a marked pulling tape with 1800 lbs tension strength, be fitted with bushings, and sealed appropriately at both ends.

B. Service Provider Conduits

1. Minimum of (4) 4-inch conduits shall route underground from the MDF to the edge of the property Right of Way and terminate as required by the service provider(s). Additional conduits shall be added as required.

2. Manholes and pull boxes shall be utilized as required for an ANSI, TIA and BICSI compliant conduit distribution system. The conduit, pull boxes/manholes sizing and construction shall be coordinated with the City of San Antonio Information Technology Service Department and the applicable service provider on a project by project basis.

3. Where the service provider termination location is unidentified at the time of design, the conduits shall route from the MDF to an adequately-sized pull box or manhole at least 30 feet from the building edge.

C. Campus Serving Conduits

1. Minimum of (2) 4-inch conduits shall route underground from the MDF to the IDF on the first floor of each additional building on the campus. Additional conduits shall be added as required if fill capacity exceeds 40 percent.

2. Manholes and pull boxes shall be utilized as required for an ANSI, TIA and BICSI compliant conduit distribution system. The conduit, pull boxes/manholes sizing and construction shall be coordinated with the City of San Antonio Information Technology Service Department and the applicable service provider on a project by project basis.

3. Where only the first building of a campus is being designed, (2) 4-inch conduits for each additional future building shall route from the MDF to an adequately-sized manhole or pull box at least 30 feet from the building edge.

D. Building Entrance for Large Campus

1. For large campuses, the MEP and Structural Engineer shall consider a conduit entrance vault as part of the MDF sub floor.

7.03 Cable Management In Telecommunications Spaces

A. Equipment Cabinets / Equipment Racks

1. Coordination with and approval by City of San Antonio Information Technology Services Department during the design is required to determine with equipment cabinets or equipment racks shall be utilized.

2. Cabinets and racks shall be black aluminum Standard Equipment Cabinets and Racks with EIA 19-inch rails, 84-inch (45 RMU) overall height and rack mount unit markings engraved on the rails.

3. All cabinets and racks shall be equipped with horizontal and vertical cable management as indicated in Exhibit 1.

4. Racks shall be bolted to the concrete floor and to the overhead cable runway utilizing manufacturer-recommended hardware and methods.

B. Overhead Cable Management

1. Overhead Cable Management shall be a Universal Cable Runway made of 3/8” x 1-1/2” x .065” wall rectangular steel tubing with cross members welded at 12-inch intervals.

a. MDFs shall be provided with a minimum of 18-inch wide Universal Cable Runway.

b. IDFs shall be provided with a minimum of 12-inch wide Universal Cable Runway.

c. Universal Cable Runway shall encircle the MDF or IDF room at 84-86 inches above the finished floor, and crossing the room above the equipment cabinets or racks (1) time.

d. The appropriate Radius Drop shall be installed over the racks or cabinets to provide the proper support for the cabling leaving the Runway and entering the rack/cabinet.

e. Universal Cable Runway shall be installed utilizing appropriate hardware to support, join, or attach sections to structures, and shall be supported at a minimum of 5 foot intervals.

f. A vertical section of cable runway shall be attached to the wall board to manage backbone and service provider cables as they transition from the entrance conduits to the overhead cable runway.

g. Universal Cable Runway shall not attach to the full sized equipment cabinets.

7.04 Cable Support in Pathways

A. Main Cable Pathway

1. Main cable pathway shall be wire-basket cable tray with the cables exiting the cable tray supported utilizing j-hooks installed a minimum of every 4-5 feet on center. J-hooks shall be installed utilizing appropriate hardware to support, join and attach j-hooks to structures.

2. Cable tray and J-hook sizing and quantity shall be scaled to the application not to exceed 40 percent fill ratio.

3. A separate j-hook shall be provided for each media type:

a. Backbone Fiber

b. Backbone Copper

c. Horizontal Data

d. Horizontal Wireless

e. Horizontal Audio/Visual

f. Horizontal Security

B. Sleeves and Penetrations

1. Sleeves and penetrations are described herein with regard to capacity, function, and basic design principles and shall be designed in accordance with NEC and EIA/TIA-569-B, Commercial Building Standard for Telecommunications Pathways and Spaces.

2. All sleeves shall be equipped with nylon bushings.

3. All sleeves and penetrations shall be properly fire-stopped to meet local code and to return the wall, floor or structure, back to its original rating.

4. Scale the quantity of sleeves to maintain a 40 percent fill ratio in each sleeve.

5. Above MDF and IDFs install minimum of (4) 4-inch EMT sleeves through the partition wall between the MDF and/or IDF overhead space and the main cabling pathway.

6. Between directly aligned vertically stacked MDF and IDFs install minimum of (3) 4" EMT sleeves through the floor of the upper IDF.

7. Between skewed MDF and IDFs on adjacent floors, install minimum of (3) 4" EMT sleeves through the floor of the upper IDF into the accessible ceiling space below and utilize main cabling pathway to route cabling into the IDF or MDF on the lower floor.

C. Workstation Rough-ins and local power (Typ.)

1. At each flush wall-mounted workstation location, install a 4 11/16 inch by 4 11/16 inch by 2-1/8 inch double-gang back box with double-gang mud ring at 18 inches above the finished floor and at appropriate height for wall mounted phones and above-counter and millwork locations.

   a. Install a minimum of (1) 1-inch conduit from the double-gang box to above accessible ceiling in the room where double-gang box is located. If ceiling is not accessible, install conduit to nearest accessible ceiling.

   b. Conduit shall not exceed the 40 percent fill ratio.

   c. Terminate the conduit above accessible ceiling and install nylon bushing and pull string.

      1) Conduit shall be installed in accordance with EIA/TIA-569-B, contain no more than the equivalent of (2) 90 degree bends and /or 98.4 feet between pull boxes, and maintain a bend radius of 6 times the diameter of the conduit.

2. At locations where the workstation outlets cannot be installed flush in the wall, a Panduit Surface Mounted Raceway that is appropriately sized and designed to meet the specific requirements shall be provided.

   a. When power is provided in the surface mounted raceway a dual-channel surface mounted raceway shall be provided to separate the power from the structured cabling.

   b. The use of surface mounted raceway shall only be considered when no option is available to install the workstation outlets flush in the wall and shall be approved by the City of San Antonio Information

Technology Service Department during the design or prior to installation.

3. At floor-mounted workstation locations, install a floor box or poke-thru specifically designed for the application and environment adequately sized to accommodate the quantity of installed horizontal data cables.

   a. Install a minimum of a (1) 1-inch conduit for every (6) cables from the floor box to above accessible ceiling.

   b. Conduit shall not exceed the 40 percent fill ratio.

4. For modular furniture workstations, a rough-in pathway shall be considered and designed according to the furniture type, quantity of cables, and location as required for each furniture system.

   a. The use of power poles shall be considered only on a case-by-case basis.

5. For ceiling-mounted outlets above accessible ceiling such as Wireless Access Points or IP Cameras, no rough-in is required. The data cable will terminate into a surface-mount box secured to the structure above the accessible ceiling.

6. The electrical engineer shall design at a minimum (1) quad NEMA 5-15R receptacle within 12” of each workstation outlet location.

7.05 Backbone Cabling

A. Service Provider Demarc

1. The service provider demarc shall be located inside the MDF when feasible.

   a. For all new construction, the service provider demarc shall be located inside the MDF. The service provider demarc location and requirements shall be coordinated with City of San Antonio Information Technology Services Department.

   b. For renovation projects where the service provider demarc is not currently located inside the MDF but is required to be relocated because of the renovation, the service provider demarc shall be relocated to the MDF. The service provider demarc location and requirements shall be coordinated with City of San Antonio Information Technology Services Department.

   c. For renovation projects where the service provider demarc is not currently located inside the MDF and is not required to be relocated because of the renovation, the service provider demarc shall be extended to the MDF via copper and/or fiber as required. The service provider demarc location and requirements shall be

coordinated with City of San Antonio Information Technology Services Department.

B. Inter-building Backbone Cabling (Campus)

1. Permanent Structures

a. Copper

1) Inter-building Backbone Copper Cabling shall be Category 3 25-pair 24 AWG flooded UTP home run from the MDF to primary IDF in each of the buildings on the campus. Provide a 10-foot service loop at both ends of each cable stored on the wall above or below the cable runway. Provide a 20-foot service loop in each manhole or pull box. Cables shall be secured with Hook-and-loop tie-wraps in the MDF or IDF.

2) Inter-building Backbone Copper Cabling shall terminate on UL-listed Category 3 25-pair 110 IDC in/out lightning protection panels equipped with UL-listed Category 3 5-pin solid state quick-acting protector modules. The secondary side of the panel shall be connected to a Category 3 24-Port RJ-45 rack mounted patch panel.

b. Fiber

1) Inter-building Backbone Fiber Optic Cabling shall be armored indoor/outdoor 48-Strand single mode home run from the MDF to the primary IDF in each of the buildings on the campus and dressed with fan-out kits as required. Provide a 10-foot service loop at both ends of each cable stored on the wall above or below the cable runway. Provide a 20-foot service loop in each manhole or pull box. Cables shall be secured with Hook-and-loop tie-wraps in the MDF or IDF.

2) All fiber optic terminations shall be fusion spliced to factory provided “pig-tail” LC terminated cables.

C. Intra-building Backbone Cabling

1. Copper

a. Intra-building Backbone Copper Cabling shall be Category 3 25-pair plenum rated 24 AWG UTP home run from the MDF to each of the IDFs in the building. Provide a 10-foot service loop at both ends of each cable stored on the wall above or below the cable runway. Cables shall be secured with Hook-and-loop tie-wraps in the MDF or IDF.

b. Intra-building Backbone Copper Cabling shall terminate on a Category 3 24-Port RJ-45 rack mounted patch panel.

2. Fiber

a. Intra-building Backbone Fiber Optic Cabling shall be armored plenum rated 24-Strand single mode from the MDF to each of the IDFs in the building. Provide a 10-foot service loop at both ends of each cable stored on the wall above or below the cable runway. Cables shall be secured with Hook-and-loop tie-wraps in the MDF or IDF and in the cable runway.

b. All fiber optic terminations shall be fusion spliced to factory provided "pig-tail" LC terminated cables.

7.06 Horizontal Cabling

A. Workstation Cable

1. Horizontal Data Cabling shall be Category 6 UTP, minimum factory sweep tested to 350 MHz, plenum rated, installed from the patch panel in the MDF or IDF to the workstation location not to exceed 295 feet for the permanent link. Provide a 10' service loop in the MDF or IDF, and 1-foot of slack at the conduit stub-up above the outlet. Cable bundles shall be secured with Hook-and-loop tie-wraps.

2. At the workstation, each Category 6 cable shall be terminated in a Category 6 modular jack insert and snapped into a single or double-gang, faceplate. Jack colors are designated in Exhibit 1. Faceplates shall be equipped with designation windows for labeling and blank inserts in unused ports.

3. Wall phone workstations shall be equipped with a studded wall phone faceplate capable of accepting a modular jack insert.

4. All faceplate colors shall be coordinated with the Architect or owner at the time of installation.

5. In the MDF or IDF, each Category 6 cable shall be terminated on the back of Category 6 rack mounted patch panels which are mounted in the equipment cabinets.

6. Category 6 cable shall be terminated with the T568B sequence.

B. Workstation Configurations

1. Office Workstation

a. Install (2) yellow Category 6 cables for data into a 6-port double-gang flush faceplate. The yellow cables shall be terminated with ivory category 6 modular jacks and placed in the first and second position in the faceplate.

1) Furnish a minimum of (1) 2-port workstation on each of (2) walls in each office of approximately 100 sq. ft. Offices that are

smaller or larger shall be designed with consideration given to the size of the office and number of personnel planned for the office.

2) Modular furniture clusters shall be designed to accommodate the user requirements at the time of construction.

2. Ceiling-Mounted Projector Outlet

a. Install (1) Purple (or Violet) Category 6 cable with 20-foot slack loop at each ceiling mounted projector location, terminated with a purple category 6 modular jack placed in a surface mounted box and secured to the building structure when mounted above the accessible ceiling.

1) When a Ceiling Mounted Projector outlet is installed above the accessible ceiling, a purple adhesive dot shall be attached to the ceiling grid directly below the outlet location for future identification of the outlet location.

2) When an accessible ceiling is not available, the designer shall coordinate with the audio/visual consultant to termination requirements.

3) The designer shall coordinate with the audio/visual consultant to determine quantities and locations of projectors.

3. Audio/Visual Control System (Control Panel)

a. Install (1) Purple (or Violet) Category 6 cable at each control panel location, terminated with a purple category 6 modular jack placed in a surface mounted box and secured to the building structure when mounted above the accessible ceiling.

1) When an Audio/Visual Control System Panel outlet is installed above the accessible ceiling, a purple adhesive dot shall be attached to the ceiling grid directly below the outlet location for future identification of the outlet location.

2) When an accessible ceiling is not available, the designer shall coordinate with the audio/visual consultant to termination requirements.

3) The designer shall coordinate with the audio/visual consultant to determine quantities and locations of projectors.

4. Wireless Access Point Outlet

a. Install (1) white Category 6 cable with 20-foot slack loop at each wireless access point location, terminated with a white Category 6 modular jack placed in a surface mounted box and secured to the building structure when mounted above the accessible ceiling.

1) When a Wireless Access Point outlet is installed above the accessible ceiling, a white adhesive dot shall be attached to the ceiling grid directly below the outlet location for future identification of the outlet location.

2) When an accessible ceiling is not available, the outlet for the wireless access point shall be terminated in a 2-port single gang flush mounted faceplate located 6-inches below ceiling not to exceed 12-feet above finished floor.

3) The designer shall coordinate with the City of San Antonio Information Technology Services Department to determine quantities and locations of wireless access points.

5. IP Camera Outlet

a. Install (1) red Category 6 cable with 20-foot slack loop at each IP camera location, terminated on red category 6 modular jack placed in a surface mounted box and secured to the building structure when mounted above the ceiling.

1) When an IP Camera workstation is installed above the accessible ceiling, a red adhesive dot shall be attached to the ceiling grid directly below the outlet location for future identification of the outlet location.

2) When an accessible ceiling is not available, the outlet for the IP camera shall be terminated in a 2-port single gang flush mounted faceplate located 6-inches below the ceiling not to exceed 12-feet above finished floor.

3) The designer shall coordinate with the City of San Antonio Information technology Services Department to determine quantities and locations of IP Cameras.

C. Patch Cables

1. MDF

a. Fiber Patch Cables – Duplex

1) In the MDF furnish to the City of San Antonio Information technology Services Department at the time of substantial completion (1) fiber optic patch cable plus 25 percent spare for each terminated strand.

2) Coordinate with City of San Antonio Information technology Services Department for patch cable types, connectors, lengths and colors.

b. Copper Patch Cables

1) In the MDF, furnish to the City of San Antonio Information Technology Services Department at the time of final substantial completion (1) 28 AWG Category 6 modular non-booted patch cable plus 25 percent spare for each terminated cable.

2) Coordinate with City of San Antonio Information Technology Services Department for lengths of patch cables.

a) Category 6 patch cables for each end user workstation outlet terminated shall be black.

b) Category 6 patch cable for each audio/visual outlet terminated shall be purple.

c) Category 6 patch cable for each wireless access outlet terminated shall be white.

d) Category 6 patch cable for each IP camera outlet terminated shall be red.

2. IDF

a. Fiber Patch Cables – Duplex

1) In each IDF furnish to the City of San Antonio Information Technology Services Department owner at the time of substantial completion (1) fiber optic patch cable plus 25 percent for each terminated strand.

2) Coordinate with City of San Antonio Information technology Services Department for patch cable types, connectors, lengths and colors.

b. Copper Patch Cables

1) In each IDF, furnish to the owner at the time of substantial completion (1) 28 AWG Category 6 modular non-booted patch cable plus 25 percent for each terminated cable.

2) Coordinate with City of San Antonio Information Technology Services Department for lengths of patch cables.

a) Category 6 patch cables for each end user workstation outlet terminated shall be black.

b) Category 6 patch cables for the active equipment side of each end user workstation outlet terminated shall be yellow.

c) Category 6 patch cable for each audio/visual outlet terminated shall be purple.

d) Category 6 patch cable for each wireless access outlet terminated shall be white.

e) Category 6 patch cable for each IP camera outlet terminated shall be red.

7.07 Grounding

A. Grounding shall be designed and installed in accordance with ANSI-J-STD-607-B.

1. Install (1) Telecommunications Main Grounding Busbar (TMGB) in the MDF and (1) Telecommunications Grounding Busbar (TGB) in each IDF.

   a. The TMGB and TGB shall be labeled.

2. Install a Telecommunications Bonding Backbone (TBB), #3/0 AWG stranded green insulated copper conductor in a star topology between the TMGB and each TGB in each building. When IDFs are stacked a single TBB can be daisy-chained between TGBs back to the TMGB.

3. Install an Equipment Bonding Conductor (EBC), #6 AWG green insulated conductor from the TMGB or TGB as applicable to each cable runway system, equipment rack, cabinet, lightning protector, or multi-pair cable with a metallic element.

   a. Install a #3/0 AWG stranded green insulated copper conductor from the TMGB to the main building electrical service ground in each building.

   b. In a metal frame (structural steel) building, where the steel framework is readily accessible within or external to the room; each TGB and TMGB shall be bonded to the vertical steel metal frame using a minimum #6 AWG conductor. The connection to building steel does not eliminate the requirement for the TBB or BC to the service ground.

4. Install a Grounding Equalizer Conductor, #3/0 AWG stranded green insulted copper conductor to interconnect multiple TBBs on the top floor and every 3rd floor when required by ANSI J-STD-607-B.

5. When exceeding 13 feet the conductors shall be sized at 2 kcmil per linear foot of conductor length up to a maximum of 3/0 AWG.

7.08 Labeling

1. Coordination with and approval by the City of San Antonio Information Technology Services Department is required on the specific site labeling schema.

2. All labels shall be typed (not handwritten)

3. Verify room numbers and confirm the final room numbering scheme prior to generating labels.

4. Horizontal Cables shall be labeled within 12 inches from the termination point inside the MDF/IDF.

5. Horizontal Cables shall be labeled within 6 inches from the termination point at the workstation end.

6. Backbone Fiber and Copper Cables shall be labeled within 12 inches of the visible end of the jacket.

7. Fiber Innerduct shall be labeled within 12 inches of the point of entry of the fiber optic enclosure.

8. Cables shall be labeled identically at both ends.

9. MDFs and IDFs Room shall be labeled (signage) with the permanent room designations that match the final building signage for cable labeling.

10. Equipment cabinets or racks in each MDF or IDF shall be labeled in sequential numeric order. Labels shall be centered on the top front of the equipment rack.

11. Fiber optic backbone cable labels shall contain the cable origin room number, the cable destination room number, fiber strand numbers, and type (i.e. MDFA150-IDFC126-48SM001-048).

12. Fiber optic enclosures shall be labeled alpha-numeric starting with the 1st fiber optic enclosure in the top of the 1st equipment rack. A label for each terminated strand shall be securely placed inside each fiber optic enclosure.

13. Fiber optic couplers panels in fiber enclosures shall be labeled at each end by strand denoting MDF and/or IDF the cable comes from, and strand number to and from respectively (i.e. IDFC126-48SM001-048).

14. Copper backbone cables labels shall contain the cable origin room number, the cable destination room number, and cable pairs (i.e. MDFA150-IDFC126/001-025).

15. Horizontal cables shall be labeled identically at each end with the destination end and origin room number, patch panel number, and port number. (i.e. IDFC126-C115-B5).

16. Patch panels in each closet shall be uniquely alphabetically labeled sequentially starting with the first Patch Panel in the top of the first equipment rack (i.e. A, B, C, D, E, etc.). Each MDF or IDF starts with A and shall not repeat a letter.

17. 110-type blocks shall contain the origin room number, destination room number, and pair numbers, under each pair termination. (i.e. MDFA150-IDFC126-PR 1-50). 110-type block labels shall be printed on product-specific label strips and placed into label holders.

18. Workstation Faceplates shall be labeled denoting origin MDF/IDF Room Number, patch panel, and port number (i.e. IDFC126-B5).

7.09 Testing

A. All test results shall be submitted to the owner along with all other final documentation. Test results shall be submitted in both PDF format and the Native Tester format along with the software needed to read the Native Tester Format.

B. Terminated fiber optic strands shall be tested bi-directionally end to end be and certified in accordance with applicable industry standards and manufacturer certifications requirements with an OTDR field and Light Meter tester that is within their calibration period.

C. Terminated backbone copper cable links shall be tested in accordance with applicable industry standards and manufacturer certification requirements for attenuation, continuity, and pin-mapping with approved field tester(s) that are within their calibration period.

D. Terminated Category 6 UTP cable links shall be tested in accordance with applicable industry standards and manufacturer certification requirements for Category 6 compliance with approved field tester(s) that are within their calibration period.

7.10 As-Built Documentation

A. Produce drawings depicting the condition of the Structured Cabling System as installed produced in AutoCAD 2010 or higher and provided in hardcopy, electronically in .DWG and .PDF format. Include the exact dimensions and locations of MDF and IDF layouts, wall elevations, equipment cabinet elevations, cable runways, cable tray, sleeves, backbone and horizontal cable pathways, workstation locations, and numbering and labeling scheme.

B. A half-size hard copy of the as-built drawings for the applicable region served by the MDF and/or IDFs shall be provided in MDF and each IDF for reference.

C. Produce cable records for the Structured Cabling System as installed to include a list of all horizontal and backbone cables produced in an Excel format and provided in hardcopy and electronic format indicating cable number, unique cable label, cable type, origin and destination, length, termination method, and pass/fail result.

D. Produce (3) hard copies of all test results for each cable, to include technician's name and date stamp, a list of tested cables, and the individual results for each cable tested. Test results shall be furnished on CD ROM to include native file format and .PDF format.

PART 8 - SUMMARY OF STANDARDS

8.01 Summary

A. All aspects of this City of San Antonio Structured Cabling Infrastructure Standards shall be applied to the design process for new, leased and renovated facilities.

B. A Division 27 specification and T-Series drawings for the Structured cabling System shall be commissioned and issued by the Architect during the design phases for each facility or project. Drawings and specifications shall be sealed with a current RCDD stamp.

PART 9 - EXHIBITS

EXHIBIT 1 - ACCEPTABLE MANUFACTURERS / PRODUCTS

A. The following list or manufacturers / products is provided for reference only and is not all inclusive. All manufacturers / products shall be verified by the designer for each project and confirmed with The City of San Antonio Information Technology Services Department prior to issuing any construction documents.

B. Where specific manufacturers / products are mentioned, an equivalent will be considered following an official submission of product literature and written acceptance by the City of San Antonio Information Technology Services Department.

C. Fiber Optic Backbone Cable

1. Indoor

   a. 9/125µm Single-Mode Plenum Rated Armored

      1) Panduit

      2) Chromatic

      3) Commscope

      4) Corning

      5) Systimax

2. Outdoor Underground

   a. 9/125µm Indoor/Outdoor Single-Mode Armored

      1) Panduit

      2) Chromatic

      3) Commscope

      4) Corning

      5) Systimax

3. Outdoor Aerial

   a. 9/125µm Indoor/Outdoor Single-Mode Armored

      1) Panduit

      2) Chromatic

      3) Commscope

      4) Corning

5) Systimax

4. Fiber Optic Fabric Innerduct

a. Indoor Plenum Rated

1) MaxCell

b. Outdoor

1) MaxCell

D. Copper Backbone Cable

1. Indoor

a. Category 3 24 AWG Unshielded Twisted Pair (UTP) Plenum (White Sheath)

1) General

2) Mohawk

3) Superior

4) Systimax

2. Outdoor Underground

a. Category 3 24 AWG Unshielded Twisted Pair (UTP) Flooded (PE-89)

1) General

2) Mohawk

3) Superior

4) Systimax

3. Outdoor Aerial

a. 24 AWG Unshielded Twisted Pair (UTP) Self-Supported

1) General

2) Mohawk

3) Superior

4) Systimax

E. Horizontal Cable

1. Category 6 UTP Plenum (Minimum 350 MHz)

a. Network Access (Yellow Sheath)

1) General

2) Panduit

b. Wireless Access Points (White Sheath)

1) General

2) Panduit

c. AV Access (Purple Sheath)

1) General

2) Panduit

d. IP Security (Red Sheath)

1) General

2) Panduit

F. Fiber Optic Cable Termination

1. Fiber Enclosure

a. Panduit Opticom Rack Mount Fiber Enclosure – Part No. FRMEXX

2. 9µm Single-Mode Fiber Coupler Panel

a. 9µm Panduit Opticom LC Fiber Adapter Panel – Part No. FAP6WBUDLCZ

3. Fiber Blank Panel

a. Panduit Opticom Blank Fiber Adapter Panel – Part No. FAPB

4. 9µm Single-Mode LC Pigtails

a. Panduit Opti-Core OS1/OS2 Single-Mode Fiber Optic Pigtails (LC to Pigtail) – Part No. F9B10-NM1Y

5. Loose Tube Fiber Fan-Out Kit

a. Panduit

G. Copper Cable Termination

1. Building Entrance Terminals

a. Primary Copper Protectors

1) Circa 50-Pair 110 Style Lightning Protection Block

2) Solid State Digital Series Surge Protection Modules

2. Backbone Cable Termination Panels

a. Rack Mounted Voice Patch Panels

1) Panduit Voice Patch Panel – Part No. VP24382TV25Y

3. Category 6 Horizontal Rack Mounted Patch Panels

a. Category 6 48-Port Patch Panels – Panduit Mini-Com Flush Mount Modular Patch Panels - Part No. CPP48FMWBLY

4. Category 6 Modular Jacks

a. Network Access

1) Equipment Room/Telecommunications Room End (Black)

a) Panduit Mini-com TX6 Plus UTP Jack Modules Part No. CJ688TGBL

2) Field End (Ivory)

a) Panduit Mini-Com TX6 Plus UTP Jack Modules Part No. CJ688TGEI

b. Wireless Access Points

1) Equipment Room/Telecommunications Room End (White)

a) Panduit Mini-Com TX6 Plus UTP Jack Modules Part No. CJ688TGWH

2) Field End (White)

a) Panduit Mini-Com TX6 Plus UTP Jack Modules Part No. CJ688TGWH

c. AV Access (Violet)

1) Equipment Room/Telecommunications Room End (Violet)

a) Panduit Mini-Com TX6 Plus UTP Jack Modules Part No. CJ688TGVL

2) Field End (Violet)

a) Panduit Mini-Com TX6 Plus UTP Jack Modules Part No. CJ688TGVL

d. IP Security

1) Equipment Room/Telecommunications Room End (Red)

a) Panduit Mini-Com TX6 Plus UTP Jack Modules Part No. CJ688TGRD

2) Field End (Red)

a) Panduit Mini-Com TX6 Plus UTP Jack Modules Part No. CJ688TGRD

5. Telecommunications Faceplates with Designation Window

a. 2-Port Single Gang Flush (Stainless Steel)

1) Panduit Mini-Com Stainless Steel Faceplates with Labels Part No. CFPL2SY

b. 4-Port Single Gang Flush (Stainless Steel)

1) Panduit Mini-Com Stainless Steel Faceplates with Labels Part No. CFPL4SY

c. 4-Port Double Gang Flush (Stainless Steel)

1) Panduit Mini-Com Stainless Steel Faceplates with Labels Part No. CFPL6S-2GY

6. Wall Phone Faceplate (Stainless Steel)

a. Panduit Phone Wall Plate Module Part No. KWP6PY

7. 2-Port Surface Mount Box (White)

a. Panduit Mini-Com Surface Mount Box Part No. CBXJ2HW-A

8. Blank Insert (White)

a. Panduit Mini-Com Blank Module – Part No. CMBWH-X

H. Equipment Racks, Cabinets, Wire Management, and Accessories

1. Two-Post Rack - 19” x 84” Open Frame (Black)

a. Panduit Part No. CMR19x84NU

2. Four-Post Open Frame Rack – 23.3” x 84” x 30.2” (Black)

a. Panduit Part No. CMR4P84

3. Equipment Cabinet (Black)

a. Chatsworth F-Series TeraFrame Gen 3 Cabinet Part No. FF2J-113B-C22A

b. Chatsworth CUBE-iT Wall-Mounted Cabinet 48” H X 24” W X 30” D Black Part No. 11996-748

c. Chatsworth Thin-Line II Wall-Mounted Cabinet 36” H X 26” W X 12” D 6U Part No. 13050-723

4. Vertical Wire Managers (Black)

a. Patch Runner Double Sided Vertical Cable Management System Panduit - Part No. PRV6

b. Patch Runner Vertical Cable Management Door Panduit - Part No. PRD6

c. Chatsworth F-Series TeraFrame Gen 3 Finger Cable Manager – Part No. 39112-C14

5. Horizontal Wire Managers (Black)

a. Net Manager Double Sided High Capacity Horizontal Cable Mangers Panduit - Part No. NCMH2

I. Cable Runway (Ladder Type)

1. 12” Universal Cable Runway

a. Chatsworth - Part No. 10250-712

2. 12” Cable Runway Radius Drop, Cross Member

a. Chatsworth - Part No. 12100-712

3. 12” Cable Runway Radius Drop, Stringer

a. Chatsworth - Part No. 12101-712

4. 18” Universal Cable Runway

a. Chatsworth - Part No. 10250-718

5. 18” Cable Runway Radius Drop, Cross Member

a. Chatsworth - Part No. 12100-718

6. 18” Cable Runway Radius Drop, Stringer

a. Chatsworth - Part No. 12101-718

7. Cable Runway Butt-Splice Kit

a. Chatsworth - Part No. 11301-701

8. Cable Runway Junction-Splice Kit

a. Chatsworth - Part No. 11302-701

9. Cable Runway Butt-Swivel Splice Kit

a. Chatsworth - Part No. 10487-701

10. Rack-to-Runway Mounting Kit

a. Chatsworth - Part No. 10595-712

11. Cable Runway Elevation Kit for Racks

a. Chatsworth - Part No. 10506-706

12. Cable Runway Elevation Kit for Cabinets

a. Chatsworth - Part No. 10506-716

13. 12” Triangular Support Bracket, Aluminum

a. Chatsworth - Part No. 11312-712

14. 12” Wall Angle Support Kit, Cable Runway

a. Chatsworth - Part No. 11421-712

15. 18” Triangular Support Bracket, Aluminum

a. Chatsworth - Part No. 11312-718

16. 18” Wall Angle Support Kit, Cable Runway

a. Chatsworth - Part No. 11421-718

17. 90 Degree Runway-Splice Kit

a. Chatsworth - Part No. 11314-701

18. 45 Degree Runway-Splice Kit

a. Chatsworth - Part No. 11313-712

19. Foot Kit, Cable Runway

a. Chatsworth - Part No. 11309-001

20. Vertical Wall Brackets (pair)

a. Chatsworth - Part No. 10608-701

21. Threaded Ceiling Kit, Cable Runway

a. Chatsworth - Part No. 11310-001

22. Threaded Rod Cover
    a. Chatsworth - Part No. 11085-001
23. Protective End Caps for Cable Runway
    a. Chatsworth - Part No. 10642-001

24. End Closing Kit, Cable Runway
    a. Chatsworth - Part No. 11700-712

J. Pathway Cable Support
    1. Panduit J-Mod Cable Support System
    2. Erico – CADDY CAT LINKS J-Hook Series
    3. Panduit Plenum Rated Hook & Loop (Black)

K. Grounding and Bonding
    1. Grounding Bus Bar, 20”
        a. Chatsworth - Part No. 40153-020
    2. Grounding Bus Bar, 12”
        a. Chatsworth - Part No. 13622-012
    3. Cable Runway Ground Strap Kit
        a. Chatsworth - Part No. 40164-001
    4. One Mounting Hole Ground Terminal Block
        a. Chatsworth - Part No. 08009-001
    5. Horizontal Rack Ground Bar for Wall Mount Cabinet
        a. Chatsworth - Part No. 10610-019
    6. #6 AWG Solid Green Insulation Ground Wire
        a. Superior Essex - Part No. 12-018-04
    7. #3/0 Stranded Green Insulation Ground Wire
    8. Cable Sheath Bonding Clamp

L. Labeling
    1. Permanent Labels for Fiber Optic Cables

a. Brady

b. Panduit Self Laminating Labels

2. Permanent Labels for Innerduct

a. Panduit Dome-Top Ty Marker

3. Permanent Labels for Copper Cables

a. Panduit Self-Laminating Labels

4. Permanent Labels for Backbone Fiber Optic Cables

a. Panduit Dome-Top Ty Marker

5. Permanent Labels for Patch Panels

a. Panduit Component Label

6. Permanent Labels for Faceplates

a. Panduit Component Label

M. Fire Stop

1. STI Spec Seal Part No.

2. 3M Products Part No.

N. Plywood

1. 8’ H x 4’ W x ¾” Sheets of BC grade fire-rated plywood

O. Fire Retardant Paint (White)

P. Fiber Patch Cables

1. Panduit

2. Corning

Q. Copper Patch Cables

1. Panduit

EXHIBIT 2 – TYPICAL DETAILS

End of Guideline

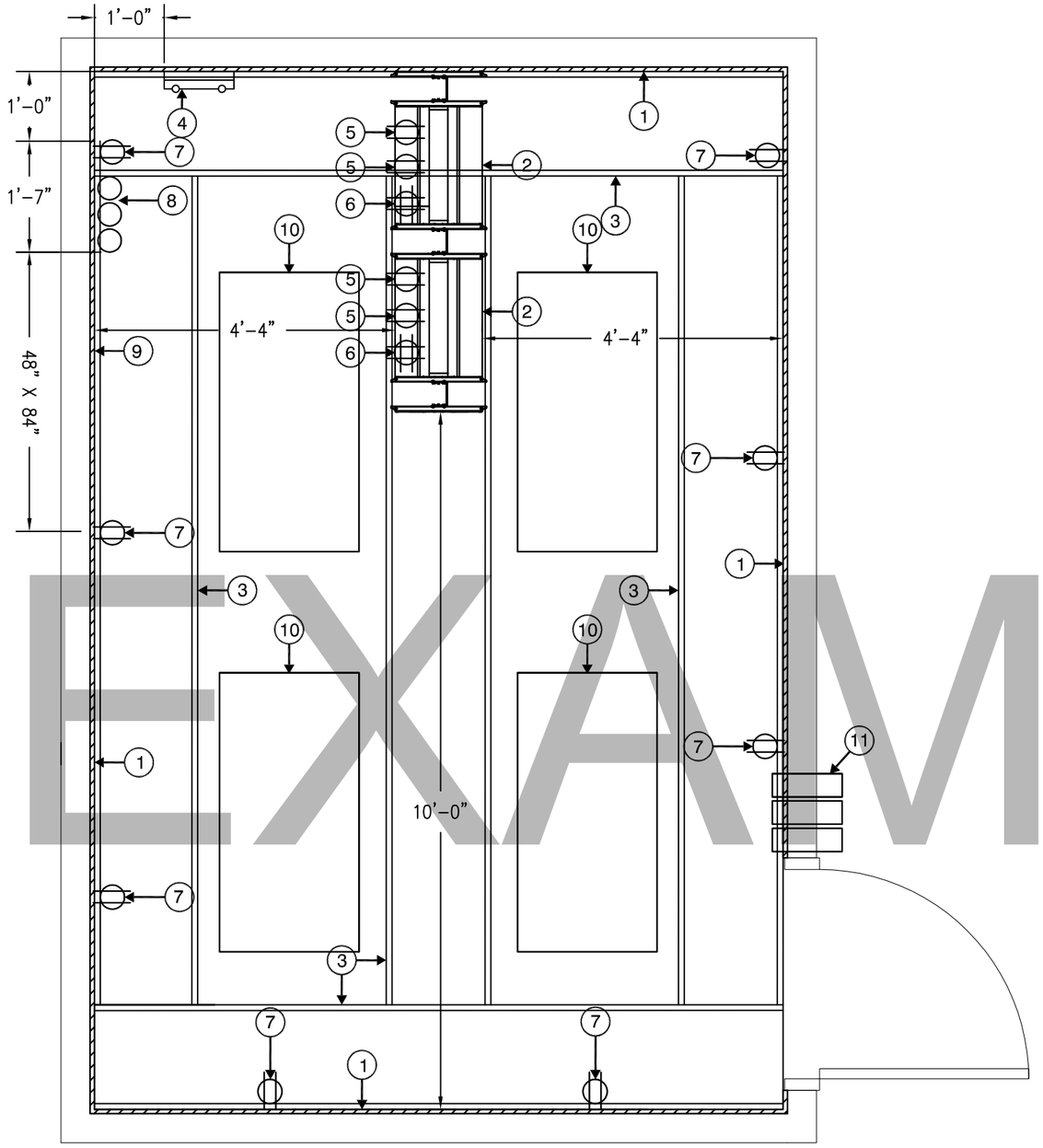

EXAMPLE

1 / xx

Typical MDF Room Layout With Racks

SCALE: 1/2"=1'-0"

TYPICAL MDF ROOM LAYOUT WITH RACKS KEYED NOTES

1. 4 – FEET X 8 – FEET X 3/4 – INCH AC GRADE VOID FREE FIRE RATED PLYWOOD INSTALLED VERTICALLY STARTING AT 12 – INCHES ABOVE FINISHED FLOOR ON ALL PERIMETER WALLS. THE PLYWOOD SHALL BE INSTALLED WITH THE "A" GRADE SIDE EXPOSED AND THE "C" GRADE SIDE AGAINST THE BUILDING WALL OR STRUCTURE. THE PLYWOOD SHALL BE PAINTED WITH TWO COATS OF FIRE RETARDANT PAINT AND ONE STAMP FROM EACH SHEET SHALL BE MASKED DURING THE PAINTING AND UNCOVERED AFTER THE PAINT HAS DRIED SO THE FIRE RATED PLYWOOD STAMPS ARE VISIBLE FOR INSPECTION. (BY DIV. 27)
2. 19 – INCH X 84 – INCH EQUIPMENT RACK WITH VERTICAL CABLE MANAGERS. (BY DIV. 27)
3. 18 – INCH LADDER RACK MOUNTED AT 84 – INCHES ABOVE FINISHED FLOOR. (BY DIV. 27)
4. GROUND BUS BAR MOUNTED AT 78 – INCHES ABOVE FINISHED FLOOR. (BY DIV. 27)
5. DEDICATED 208 VAC 20 AMP CIRCUIT IN J–BOX MOUNTED TO UNISTRUT ABOVE THE LADDER RACK AND PROVIDED WITH A 7 – FT SO TYPE CORD WITH FEMALE NEMA L6 – 20R RECEPTACLE ON THE END. (BY DIV. 26)
6. DEDICATED 120 VAC 20 AMP CIRCUIT IN J–BOX MOUNTED TO UNISTRUT ABOVE THE LADDER RACK AND PROVIDED WITH A 7 – FT SO TYPE CORD WITH FEMALE NEMA 5 – 20R RECEPTACLE ON THE END. (BY DIV. 26)
7. 20 AMP CIRCUIT WITH QUAD RECEPTACLE NEMA 5–20R FLUSH MOUNTED TO THE FINISHED WALL SURFACE AT 18 – INCHES ABOVE FINISHED FLOOR. OUTLETS SHALL BE SPACED NO FARTHER APART THAN 6 – FEET. MAXIMUM OF (6) PER CIRCUIT. (BY DIV. 26)
8. (3) 4 – INCH CONDUITS TERMINATED 4 – INCHES ABOVE FINISHED FLOOR AND NO FARTHER THAN 2 INCHES FROM THE WALL FOR SERVICE PROVIDER. CONTRACTOR SHALL PROVIDE PULL STRING AND NYLON BUSHINGS AND CAPS ON END OF CONDUIT. (BY DIV. 26)
9. 48 – INCHES WIDE X 84 – INCHES HIGH RESERVED FOR SERVICE PROVIDER TERMINATION. (BY DIV. 27)
10. TYPICAL LIGHTING ORIENTATION, ENSURE THERE IS 50 FOOT CANDLES AT 2 – FEET ABOVE FINISHED FLOOR. (BY DIV. 26)
11. (3) 4 – INCH EMT CONDUIT SLEEVES ABOVE ACCESSIBLE CEILING WITH NYLON BUSHINGS ON EACH END AND SECURED TO WALL. CONDUIT SLEEVES SHALL BE SEALED ON THE EXTERIOR AND INTERIOR TO RETURN THE WALL BACK TO THE ORIGINAL RATING. IF WALL IS NOT RATED CONDUIT SHALL BE SEALED ON THE EXTERIOR AND INTERIOR TO REDUCE NOISE TRAVELING THROUGH THE PENETRATION. CONDUIT SLEEVES SHALL BE USED FOR LOW VOLTAGE DATA VOICE VIDEO AND SECURITY ONLY. (BY DIV. 26)

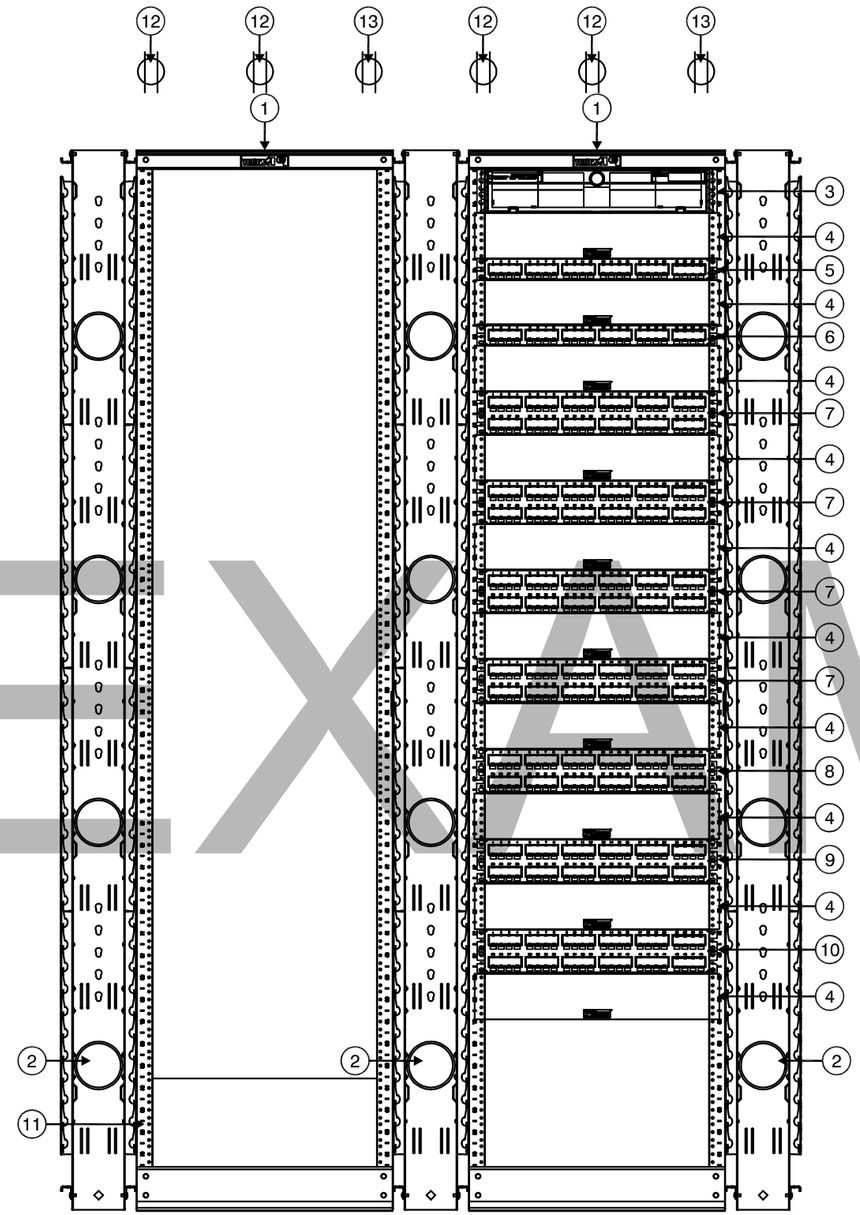

Typical MDF Rack Elevation

1 / XX

SCALE: 1"=1'-0"

TYPICAL MDF ROOM RACK ELEVATION KEYED NOTES

1. 19 – INCH X 84 – INCH EQUIPMENT RACK. (BY DIV. 27)
2. DOUBLE – SIDED VERTICAL CABLE MANAGER. (BY DIV. 27)
3. RACK MOUNTED 48 – PORT FIBER OPTIC ENCLOSURE FOR SINGLE MODE FIBER OPTIC CABLE. (BY DIV. 27)
4. DOUBLE–SIDED HORIZONTAL CABLE MANAGER. (BY DIV. 27)
5. RACK MOUNTED 24 – PORT VOICE PATCH PANEL FOR INCOMING TELCO SERVICE. (BY DIV. 27)
6. RACK MOUNTED 24 – PORT VOICE PATCH PANEL. (BY DIV. 27)
7. RACK MOUNTED 48 – PORT CATEGORY 6 PATCH PANEL FOR DATA. (BY DIV. 27)
8. RACK MOUNTED 48 – PORT CATEGORY 6 PATCH PANEL FOR WIRELESS ACCESS POINTS. (BY DIV. 27)
9. RACK MOUNTED 48 – PORT CATEGORY 6 PATCH PANEL FOR AUDIO VISUAL SYSTEMS. (BY DIV. 27)
10. RACK MOUNTED 48 – PORT CATEGORY 6 PATCH PANEL FOR IP SECURITY. (BY DIV. 27)
11. (4) RACK MOUNTED UNITS OF SPACE FOR OWNER PROVIDED / OWNER INSTALLED UPS. (BY DIV. 27)
12. DEDICATED 208 VAC 20 AMP CIRCUIT IN J–BOX MOUNTED TO UNISTRUT ABOVE THE LADDER RACK AND PROVIDED WITH A 7 – FT SO TYPE CORD WITH FEMALE NEMA L6 – 20R RECEPTACLE ON THE END. (BY DIV. 26)
13. DEDICATED 120 VAC 20 AMP CIRCUIT IN J–BOX MOUNTED TO UNISTRUT ABOVE THE LADDER RACK AND PROVIDED WITH A 7 – FT SO TYPE CORD WITH FEMALE NEMA 5 – 20R RECEPTACLE ON THE END. (BY DIV. 26)

EXAMPLE

COMBS Consulting Group technology & security
8200 IH-10 West, Ste. 103 Phone : 210-688-7887
San Antonio, Texas 78230

PROJECT NAME:

CITY OF SAN ANTONIO
STRUCTURED CABLING INFRASTRUCTURE STANDARDS

DATE: 03-04-14

SHEET: 2

SCALE: As Shown

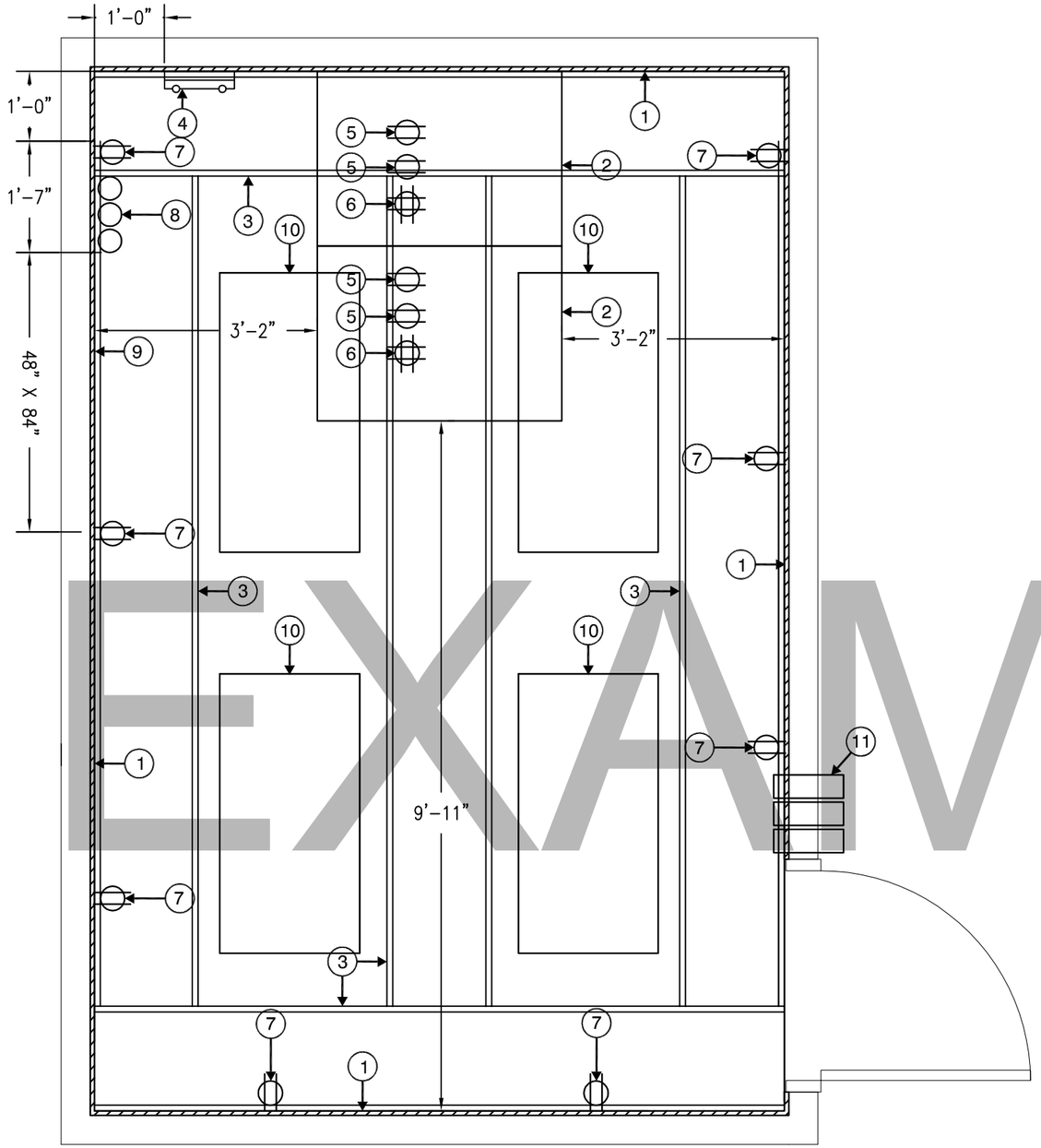

1 / xx

Typical MDF Room Layout With Cabinets

SCALE: 1/2"=1'-0"

TYPICAL MDF ROOM LAYOUT WITH CABINETS KEYED NOTES

1. 4 – FEET X 8 – FEET X 3/4 – INCH AC GRADE VOID FREE FIRE RATED PLYWOOD INSTALLED VERTICALLY STARTING AT 12 – INCHES ABOVE FINISHED FLOOR ON ALL PERIMETER WALLS. THE PLYWOOD SHALL BE INSTALLED WITH THE "A" GRADE SIDE EXPOSED AND THE "C" GRADE SIDE AGAINST THE BUILDING WALL OR STRUCTURE. THE PLYWOOD SHALL BE PAINTED WITH TWO COATS OF FIRE RETARDANT PAINT AND ONE STAMP FROM EACH SHEET SHALL BE MASKED DURING THE PAINTING AND UNCOVERED AFTER THE PAINT HAS DRIED SO THE FIRE RATED PLYWOOD STAMPS ARE VISIBLE FOR INSPECTION. (BY DIV. 27)
2. 27.6 – INCH X 84.6 – INCH TERAFRAME CABINET WITH VERTICAL CABLE MANAGERS. (BY DIV. 27)
3. 12 – INCH LADDER RACK MOUNTED AT 84 – INCHES ABOVE FINISHED FLOOR. (BY DIV. 27)
4. GROUND BUS BAR MOUNTED AT 78 – INCHES ABOVE FINISHED FLOOR. (BY DIV. 27)
5. DEDICATED 208 VAC 20 AMP CIRCUIT IN J–BOX MOUNTED TO UNISTRUT ABOVE THE LADDER RACK AND PROVIDED WITH A 7 – FT SO TYPE CORD WITH FEMALE NEMA L6 – 20R RECEPTACLE ON THE END. (BY DIV. 26)
6. DEDICATED 120 VAC 20 AMP CIRCUIT IN J–BOX MOUNTED TO UNISTRUT ABOVE THE LADDER RACK AND PROVIDED WITH A 7 – FT SO TYPE CORD WITH FEMALE NEMA 5 – 20R RECEPTACLE ON THE END. (BY DIV. 26)
7. 20 AMP CIRCUIT WITH QUAD RECEPTACLE NEMA 5–20R FLUSH MOUNTED TO THE FINISHED WALL SURFACE AT 18 – INCHES ABOVE FINISHED FLOOR. OUTLETS SHALL BE SPACED NO FARTHER APART THAN 6 – FEET. MAXIMUM OF (6) PER CIRCUIT. (BY DIV. 26)
8. (3) 4 – INCH CONDUITS TERMINATED 4 – INCHES ABOVE FINISHED FLOOR AND NO FARTHER THAN 2 INCHES FROM THE WALL FOR SERVICE PROVIDER. CONTRACTOR SHALL PROVIDE PULL STRING AND NYLON BUSHINGS AND CAPS ON END OF CONDUIT. (BY DIV. 26)
9. 48 – INCHES WIDE X 84 – INCHES HIGH RESERVED FOR SERVICE PROVIDER TERMINATION. (BY DIV. 27)
10. TYPICAL LIGHTING ORIENTATION, ENSURE THERE IS 50 FOOT CANDLES AT 2 – FEET ABOVE FINISHED FLOOR. (BY DIV. 26)
11. (3) 4 – INCH EMT CONDUIT SLEEVES ABOVE ACCESSIBLE CEILING WITH NYLON BUSHINGS ON EACH END AND SECURED TO WALL. CONDUIT SLEEVES SHALL BE SEALED ON THE EXTERIOR AND INTERIOR TO RETURN THE WALL BACK TO THE ORIGINAL RATING. IF WALL IS NOT RATED CONDUIT SHALL BE SEALED ON THE EXTERIOR AND INTERIOR TO REDUCE NOISE TRAVELING THROUGH THE PENETRATION. CONDUIT SLEEVES SHALL BE USED FOR LOW VOLTAGE DATA VOICE VIDEO AND SECURITY ONLY. (BY DIV. 26)

EXAMPLE

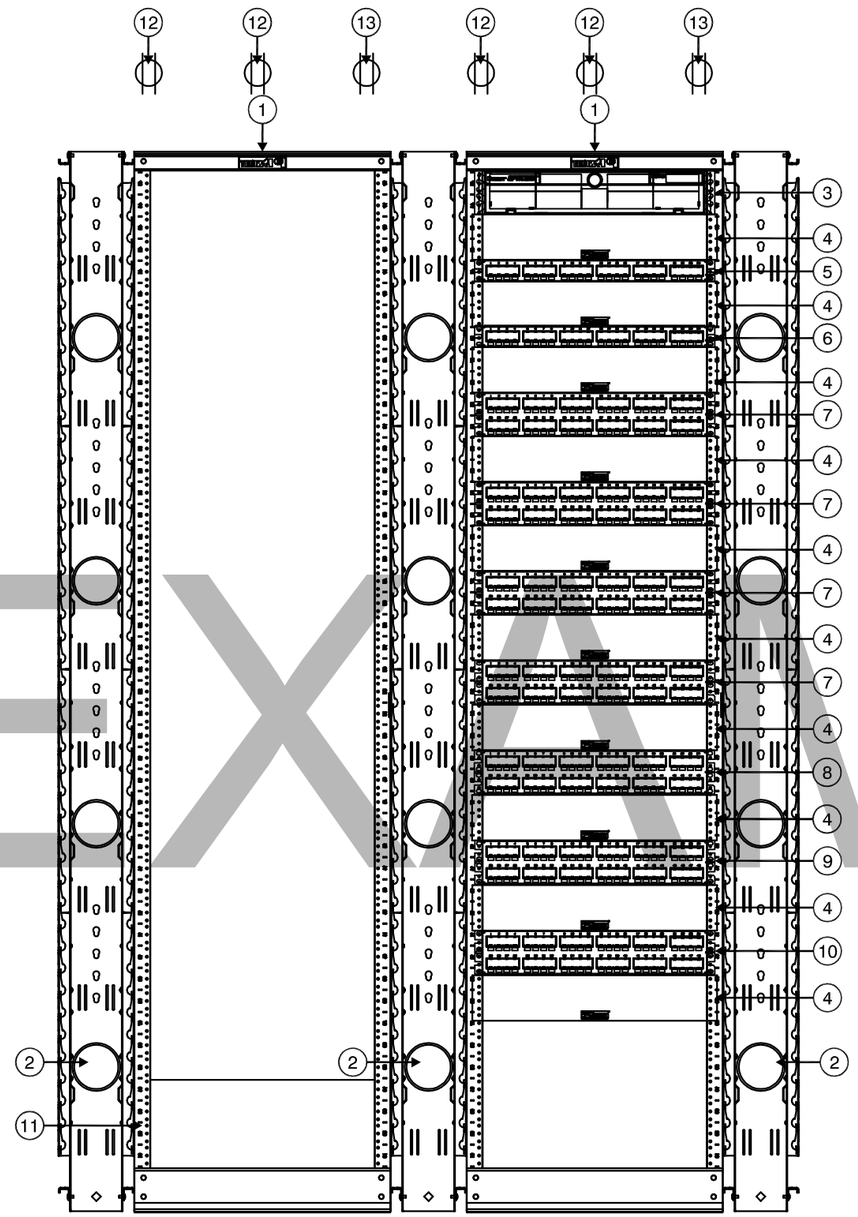

Typical MDF Cabinet Elevation

1 / xx

SCALE: 1"=1'-0"

TYPICAL MDF ROOM CABINET ELEVATION KEYED NOTES

1. 27.6 – INCH X 84.6 – INCH TERAFRAME CABINET. (BY DIV. 27)
2. TERAFRAME DOUBLE – SIDED VERTICAL FINGER CABLE MANAGER. (BY DIV. 27)
3. RACK MOUNTED 48 – PORT FIBER OPTIC ENCLOSURE FOR SINGLE MODE FIBER OPTIC CABLE. (BY DIV. 27)
4. DOUBLE–SIDED HORIZONTAL CABLE MANAGER. (BY DIV. 27)
5. RACK MOUNTED 24 – PORT VOICE PATCH PANEL FOR INCOMING TELCO SERVICE. (BY DIV. 27)
6. RACK MOUNTED 24 – PORT VOICE PATCH PANEL. (BY DIV. 27)
7. RACK MOUNTED 48 – PORT CATEGORY 6 PATCH PANEL FOR DATA. (BY DIV. 27)
8. RACK MOUNTED 48 – PORT CATEGORY 6 PATCH PANEL FOR WIRELESS ACCESS POINTS. (BY DIV. 27)
9. RACK MOUNTED 48 – PORT CATEGORY 6 PATCH PANEL FOR AUDIO VISUAL SYSTEMS. (BY DIV. 27)
10. RACK MOUNTED 48 – PORT CATEGORY 6 PATCH PANEL FOR IP SECURITY. (BY DIV. 27)
11. (4) RACK MOUNTED UNITS OF SPACE FOR OWNER PROVIDED / OWNER INSTALLED UPS. (BY DIV. 27)
12. DEDICATED 208 VAC 20 AMP CIRCUIT IN J–BOX MOUNTED TO UNISTRUT ABOVE THE LADDER RACK AND PROVIDED WITH A 7 – FT SO TYPE CORD WITH FEMALE NEMA L6 – 20R RECEPTACLE ON THE END. (BY DIV. 26)
13. DEDICATED 120 VAC 20 AMP CIRCUIT IN J–BOX MOUNTED TO UNISTRUT ABOVE THE LADDER RACK AND PROVIDED WITH A 7 – FT SO TYPE CORD WITH FEMALE NEMA 5 – 20R RECEPTACLE ON THE END. (BY DIV. 26)

EXAMPLE

COMBS Consulting Group technology & security
8200 IH-10 West, Ste. 103 Phone : 210-698-7887
San Antonio, Texas 78230

PROJECT NAME:

CITY OF SAN ANTONIO
STRUCTURED CABLING INFRASTRUCTURE STANDARDS

DATE: 03-04-14

SHEET: 4

SCALE: As Shown

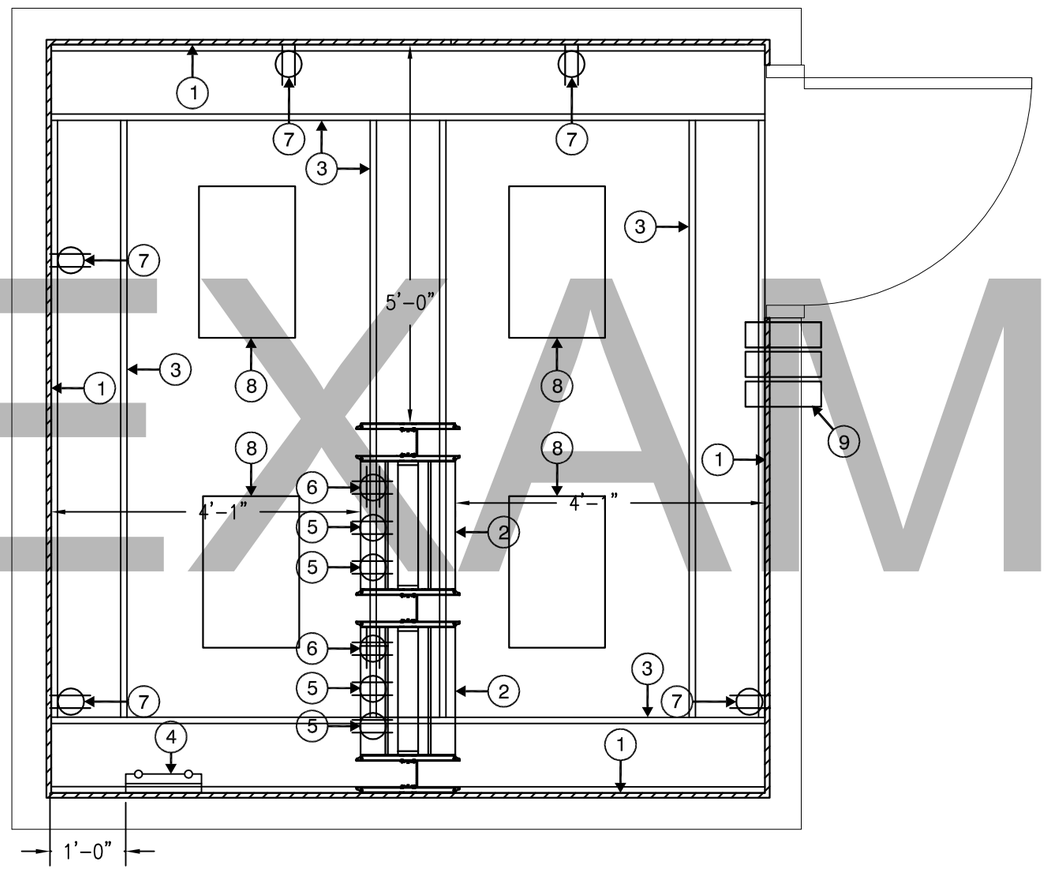

1 / xx Typical IDF Room Layout With Racks

SCALE: 1/2"=1'–0"

TYPICAL IDF ROOM LAYOUT WITH RACKS KEYED NOTES

1. 4 – FEET X 8 – FEET X 3/4 – INCH AC GRADE VOID FREE FIRE RATED PLYWOOD INSTALLED VERTICALLY STARTING AT 12 – INCHES ABOVE FINISHED FLOOR ON ALL PERIMETER WALLS. THE PLYWOOD SHALL BE INSTALLED WITH THE "A" GRADE SIDE EXPOSED AND THE "C" GRADE SIDE AGAINST THE BUILDING WALL OR STRUCTURE. THE PLYWOOD SHALL BE PAINTED WITH TWO COATS OF FIRE RETARDANT PAINT AND ONE STAMP FROM EACH SHEET SHALL BE MASKED DURING THE PAINTING AND UNCOVERED AFTER THE PAINT HAS DRIED SO THE FIRE RATED PLYWOOD STAMPS ARE VISIBLE FOR INSPECTION. (BY DIV. 27)
2. 19 – INCH X 84 – INCH EQUIPMENT RACK WITH VERTICAL CABLE MANAGERS. (BY DIV. 27)
3. 12 – INCH LADDER RACK MOUNTED AT 84 – INCHES ABOVE FINISHED FLOOR. (BY DIV. 27)
4. GROUND BUS BAR MOUNTED AT 78 – INCHES ABOVE FINISHED FLOOR. (BY DIV. 27)
5. DEDICATED 208 VAC 20 AMP CIRCUIT IN J–BOX MOUNTED TO UNISTRUT ABOVE THE LADDER RACK AND PROVIDED WITH A 7 – FT SO TYPE CORD WITH FEMALE NEMA L6 – 20R RECEPTACLE ON THE END. (BY DIV. 26)
6. DEDICATED 120 VAC 20 AMP CIRCUIT IN J–BOX MOUNTED TO UNISTRUT ABOVE THE LADDER RACK AND PROVIDED WITH A 7 – FT SO TYPE CORD WITH FEMALE NEMA 5 – 20R RECEPTACLE ON THE END. (BY DIV. 26)
7. 20 AMP CIRCUIT WITH QUAD RECEPTACLE NEMA 5–20R FLUSH MOUNTED TO THE FINISHED WALL SURFACE AT 18 – INCHES ABOVE FINISHED FLOOR. OUTLETS SHALL BE SPACED NO FARTHER APART THAN 6 – FEET. MAXIMUM OF (6) PER CIRCUIT. (BY DIV. 26)
8. TYPICAL LIGHTING ORIENTATION, ENSURE THERE IS 50 FOOT CANDLES AT 2 – FEET ABOVE FINISHED FLOOR. (BY DIV. 26)
9. (3) 4 – INCH EMT CONDUIT SLEEVES ABOVE ACCESSIBLE CEILING WITH NYLON BUSHINGS ON EACH END AND SECURED TO WALL. CONDUIT SLEEVES SHALL BE SEALED ON THE EXTERIOR AND INTERIOR TO RETURN THE WALL BACK TO THE ORIGINAL RATING. IF WALL IS NOT RATED CONDUIT SHALL BE SEALED ON THE EXTERIOR AND INTERIOR TO REDUCE NOISE TRAVELING THROUGH THE PENETRATION. CONDUIT SLEEVES SHALL BE USED FOR LOW VOLTAGE DATA VOICE VIDEO AND SECURITY ONLY. (BY DIV. 26)

EXAMPLE

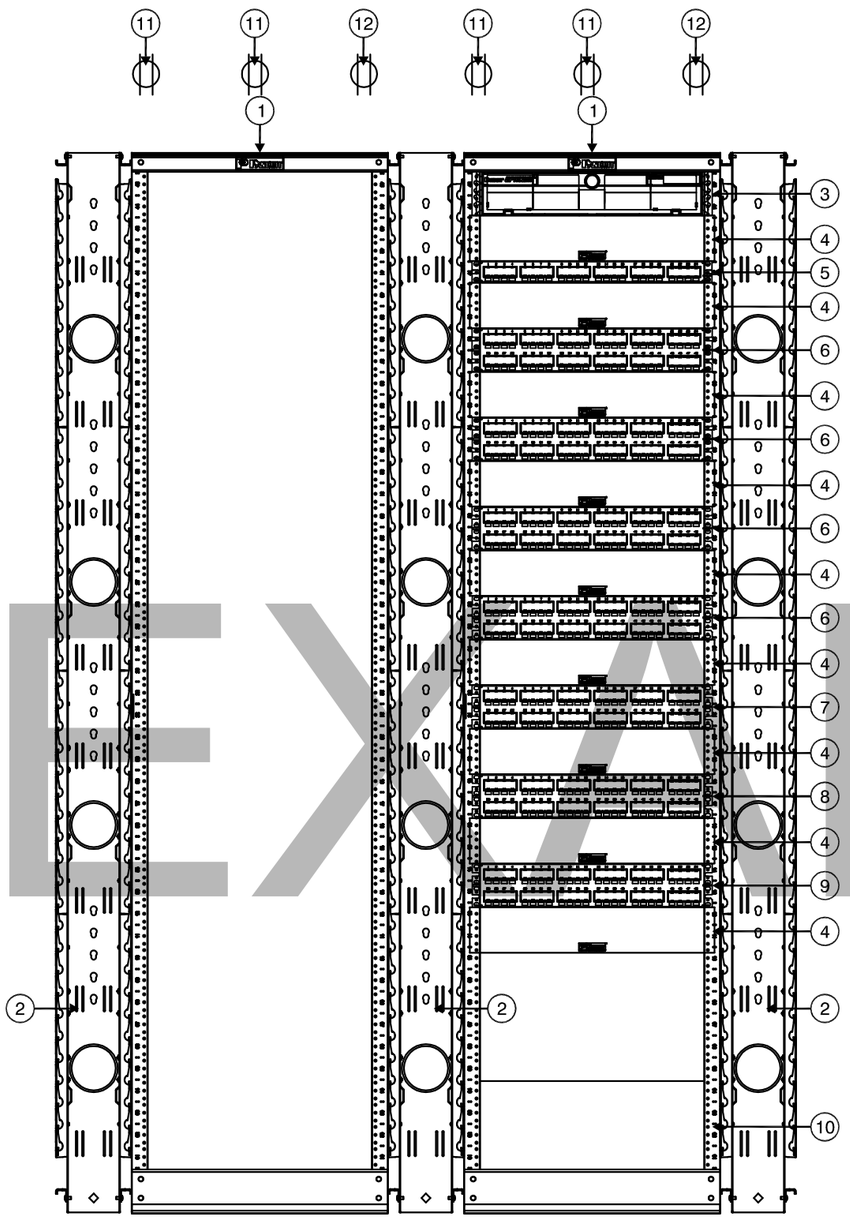

Typical IDF Rack Elevation

1 / xx

SCALE: 1"=1'-0"

TYPICAL IDF ROOM RACK ELEVATION KEYED NOTES

1. 19 – INCH X 84 – INCH EQUIPMENT RACK. (BY DIV. 27)
2. DOUBLE – SIDED VERTICAL CABLE MANAGER. (BY DIV. 27)
3. RACK MOUNTED 48 – PORT FIBER OPTIC ENCLOSURE FOR SINGLE MODE FIBER OPTIC CABLE. (BY DIV. 27)
4. DOUBLE–SIDED HORIZONTAL CABLE MANAGER. (BY DIV. 27)
5. RACK MOUNTED 24 – PORT VOICE PATCH PANEL. (BY DIV. 27)
6. RACK MOUNTED 48 – PORT CATEGORY 6 PATCH PANEL FOR DATA. (BY DIV. 27)
7. RACK MOUNTED 48 – PORT CATEGORY 6 PATCH PANEL FOR WIRELESS ACCESS POINTS. (BY DIV. 27)
8. RACK MOUNTED 48 – PORT CATEGORY 6 PATCH PANEL FOR AUDIO VISUAL SYSTEMS. (BY DIV. 27)
9. RACK MOUNTED 48 – PORT CATEGORY 6 PATCH PANEL FOR IP SECURITY. (BY DIV. 27)
10. (4) RACK MOUNTED UNITS OF SPACE FOR OWNER PROVIDED / OWNER INSTALLED UPS. (BY DIV. 27)
11. DEDICATED 208 VAC 20 AMP CIRCUIT IN J–BOX MOUNTED TO UNISTRUT ABOVE THE LADDER RACK AND PROVIDED WITH A 7 – FT SO TYPE CORD WITH FEMALE NEMA L6 – 20R RECEPTACLE ON THE END. (BY DIV. 26)
12. DEDICATED 120 VAC 20 AMP CIRCUIT IN J–BOX MOUNTED TO UNISTRUT ABOVE THE LADDER RACK AND PROVIDED WITH A 7 – FT SO TYPE CORD WITH FEMALE NEMA 5 – 20R RECEPTACLE ON THE END. (BY DIV. 26)

EXAMPLE

COMBS Consulting Group technology & security
8200 IH-10 West, Ste. 103 Phone : 210-698-7887
San Antonio, Texas 78230

PROJECT NAME:

CITY OF SAN ANTONIO
STRUCTURED CABLING INFRASTRUCTURE STANDARDS

DATE: 03-04-14

SHEET: 6

SCALE: As Shown

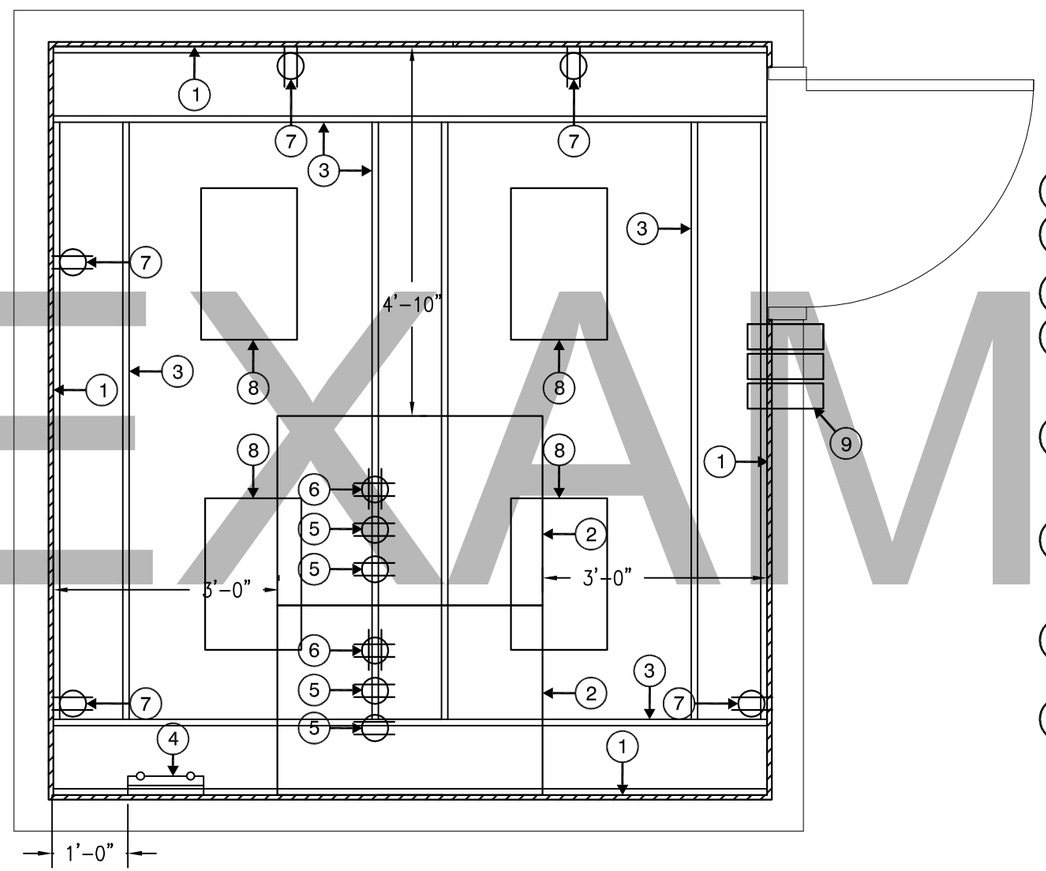

1 / xx Typical IDF Room Layout With Cabinets

SCALE: 1/2"=1'-0"

TYPICAL IDF ROOM LAYOUT WITH CABINETS KEYED NOTES

1. 4 – FEET X 8 – FEET X 3/4 – INCH AC GRADE VOID FREE FIRE RATED PLYWOOD INSTALLED VERTICALLY STARTING AT 12 – INCHES ABOVE FINISHED FLOOR ON ALL PERIMETER WALLS. THE PLYWOOD SHALL BE INSTALLED WITH THE "A" GRADE SIDE EXPOSED AND THE "C" GRADE SIDE AGAINST THE BUILDING WALL OR STRUCTURE. THE PLYWOOD SHALL BE PAINTED WITH TWO COATS OF FIRE RETARDANT PAINT AND ONE STAMP FROM EACH SHEET SHALL BE MASKED DURING THE PAINTING AND UNCOVERED AFTER THE PAINT HAS DRIED SO THE FIRE RATED PLYWOOD STAMPS ARE VISIBLE FOR INSPECTION. (BY DIV. 27)
2. 27.6 – INCH X 84.6 – INCH TERAFRAME CABINET WITH VERTICAL CABLE MANAGERS. (BY DIV. 27)
3. 12 – INCH LADDER RACK MOUNTED AT 84 – INCHES ABOVE FINISHED FLOOR. (BY DIV. 27)
4. GROUND BUS BAR MOUNTED AT 78 – INCHES ABOVE FINISHED FLOOR. (BY DIV. 27)
5. DEDICATED 208 VAC 20 AMP CIRCUIT IN J–BOX MOUNTED TO UNISTRUT ABOVE THE LADDER RACK AND PROVIDED WITH A 7 – FT SO TYPE CORD WITH FEMALE NEMA L6 – 20R RECEPTACLE ON THE END. (BY DIV. 26)
6. DEDICATED 120 VAC 20 AMP CIRCUIT IN J–BOX MOUNTED TO UNISTRUT ABOVE THE LADDER RACK AND PROVIDED WITH A 7 – FT SO TYPE CORD WITH FEMALE NEMA 5 – 20R RECEPTACLE ON THE END. (BY DIV. 26)
7. 20 AMP CIRCUIT WITH QUAD RECEPTACLE NEMA 5–20R FLUSH MOUNTED TO THE FINISHED WALL SURFACE AT 18 – INCHES ABOVE FINISHED FLOOR. OUTLETS SHALL BE SPACED NO FARTHER APART THAN 6 – FEET. MAXIMUM OF (6) PER CIRCUIT. (BY DIV. 26)
8. TYPICAL LIGHTING ORIENTATION, ENSURE THERE IS 50 FOOT CANDLES AT 2 – FEET ABOVE FINISHED FLOOR. (BY DIV. 26)
9. (3) 4 – INCH EMT CONDUIT SLEEVES ABOVE ACCESSIBLE CEILING WITH NYLON BUSHINGS ON EACH END AND SECURED TO WALL. CONDUIT SLEEVES SHALL BE SEALED ON THE EXTERIOR AND INTERIOR TO RETURN THE WALL BACK TO THE ORIGINAL RATING. IF WALL IS NOT RATED CONDUIT SHALL BE SEALED ON THE EXTERIOR AND INTERIOR TO REDUCE NOISE TRAVELING THROUGH THE PENETRATION. CONDUIT SLEEVES SHALL BE USED FOR LOW VOLTAGE DATA VOICE VIDEO AND SECURITY ONLY. (BY DIV. 26)

EXAMPLE

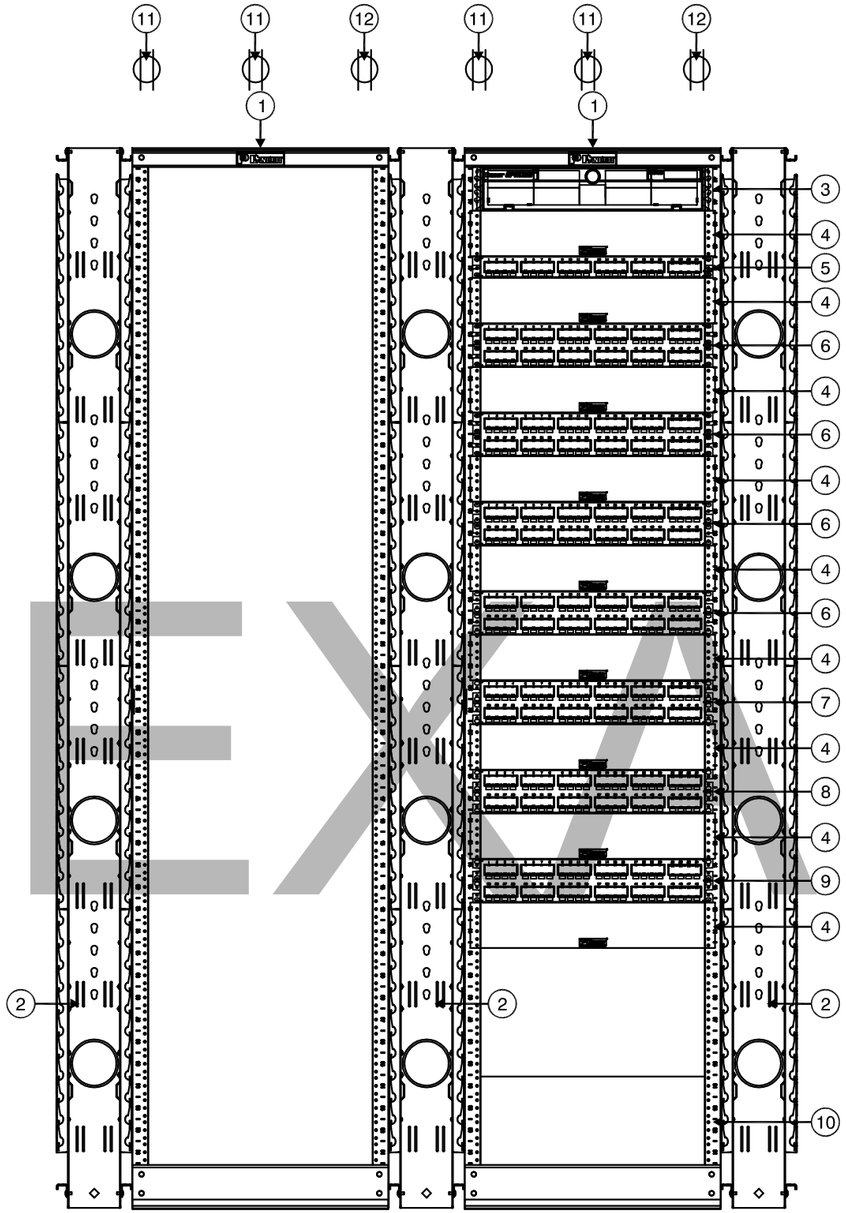

1 / xx

Typical IDF Cabinet Elevation

SCALE: 1"=1'-0"

TYPICAL IDF ROOM CABINET ELEVATION KEYED NOTES

1. 27.6 – INCH X 84.6 – INCH TERAFRAME CABINET. (BY DIV. 27)
2. TERAFRAME DOUBLE – SIDED VERTICAL FINGER CABLE MANAGER. (BY DIV. 27)
3. RACK MOUNTED 48 – PORT FIBER OPTIC ENCLOSURE FOR SINGLE MODE FIBER OPTIC CABLE. (BY DIV. 27)
4. DOUBLE–SIDED HORIZONTAL CABLE MANAGER. (BY DIV. 27)
5. RACK MOUNTED 24 – PORT VOICE PATCH PANEL. (BY DIV. 27)
6. RACK MOUNTED 48 – PORT CATEGORY 6 PATCH PANEL FOR DATA. (BY DIV. 27)
7. RACK MOUNTED 48 – PORT CATEGORY 6 PATCH PANEL FOR WIRELESS ACCESS POINTS. (BY DIV. 27)
8. RACK MOUNTED 48 – PORT CATEGORY 6 PATCH PANEL FOR AUDIO VISUAL SYSTEMS. (BY DIV. 27)
9. RACK MOUNTED 48 – PORT CATEGORY 6 PATCH PANEL FOR IP SECURITY. (BY DIV. 27)
10. (4) RACK MOUNTED UNITS OF SPACE FOR OWNER PROVIDED / OWNER INSTALLED UPS. (BY DIV. 27)
11. DEDICATED 208 VAC 20 AMP CIRCUIT IN J–BOX MOUNTED TO UNISTRUT ABOVE THE LADDER RACK AND PROVIDED WITH A 7 – FT SO TYPE CORD WITH FEMALE NEMA L6 – 20R RECEPTACLE ON THE END. (BY DIV. 26)
12. DEDICATED 120 VAC 20 AMP CIRCUIT IN J–BOX MOUNTED TO UNISTRUT ABOVE THE LADDER RACK AND PROVIDED WITH A 7 – FT SO TYPE CORD WITH FEMALE NEMA 5 – 20R RECEPTACLE ON THE END. (BY DIV. 26)

EXAMPLE

COMBS Consulting Group
Technology & Security
8200 I-10 West, Ste. 103 Phone : 210-698-7887
San Antonio, Texas 78230

PROJECT NAME:

CITY OF SAN ANTONIO
STRUCTURED CABLING INFRASTRUCTURE STANDARDS

DATE: 03-04-14

SHEET: 8

SCALE: As Shown

1 CATEGORY 3 25-PAIR PLENUM

2 ARMORED SINGLE MODE 24-STRAND PLENUM

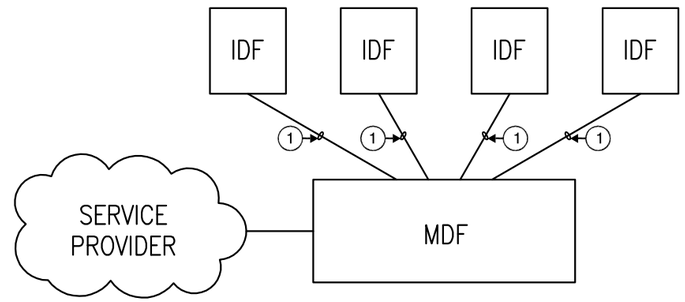

2/xx Single Stand-Alone Building Copper Topology Diagram

SCALE: N.T.S.

EXAMPLE

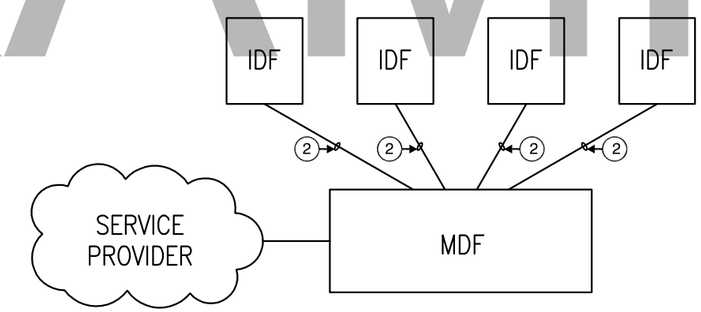

1/xx Single Stand-Alone Building Fiber Topology Diagram

SCALE: N.T.S.

COMBS Consulting Group
Technology & security
8200 IH-10 West, Ste. 103 Phone : 210-698-7887
San Antonio, Texas 78230

PROJECT NAME:

CITY OF SAN ANTONIO
STRUCTURED CABLING INFRASTRUCTURE STANDARDS

DATE: 03-04-14

SHEET: 9

SCALE: As Shown

1 CATEGORY 3 25-PAIR PLENUM

2 ARMORED SINGLE MODE 24-STRAND PLENUM

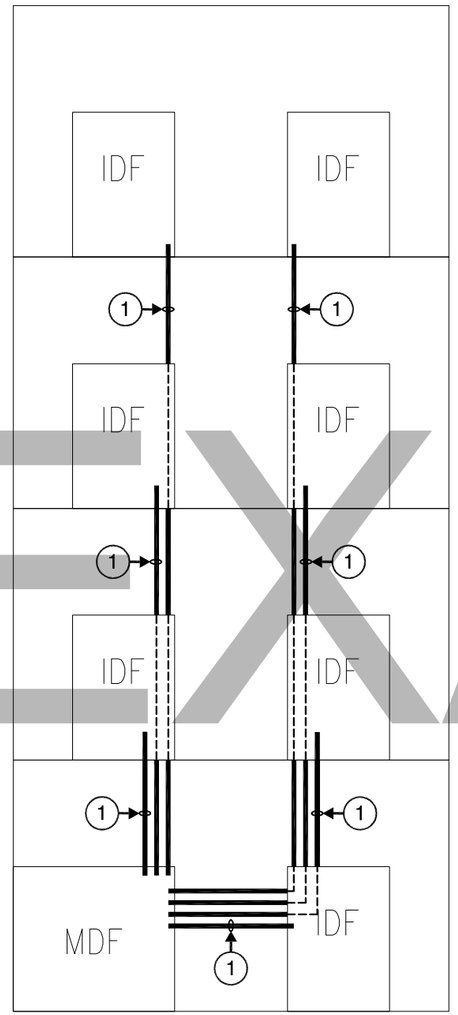

1/xx Single Stand-Alone Building Copper Riser Diagram

SCALE: N.T.S.

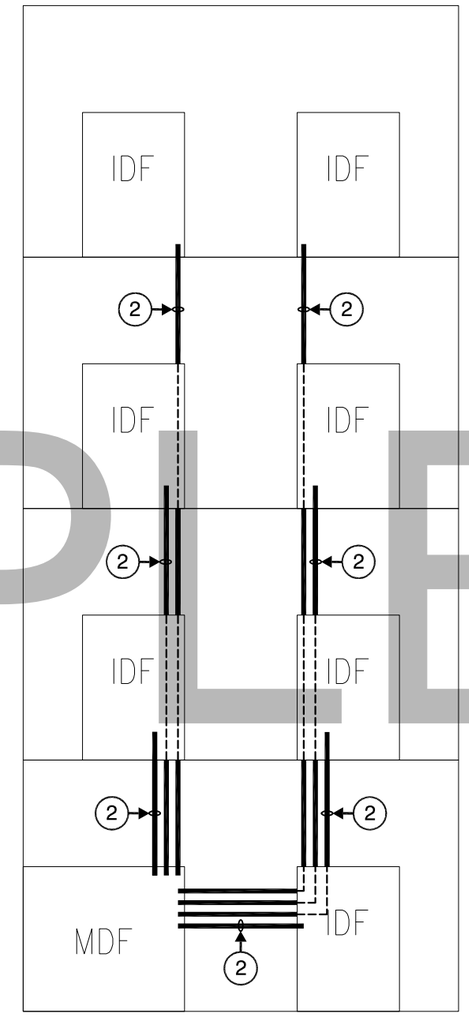

2/xx Single Stand-Alone Building Fiber Riser Diagram

SCALE: N.T.S.

EXAMPLE

COMBS Consulting Group
Technology & security
8200 IH-10 West, Ste. 103 Phone : 210-698-7887
San Antonio, Texas 78230

PROJECT NAME:

CITY OF SAN ANTONIO
STRUCTURED CABLING INFRASTRUCTURE STANDARDS

DATE: 03-04-14

SHEET: 10

SCALE: As Shown

1 CATEGORY 3 25-PAIR OSP

2 CATEGORY 3 25-PAIR PLENUM

3 ARMORED SINGLE MODE 48-STRAND INDOOR/OUTDOOR

4 ARMORED SINGLE MODE 24-STRAND PLENUM

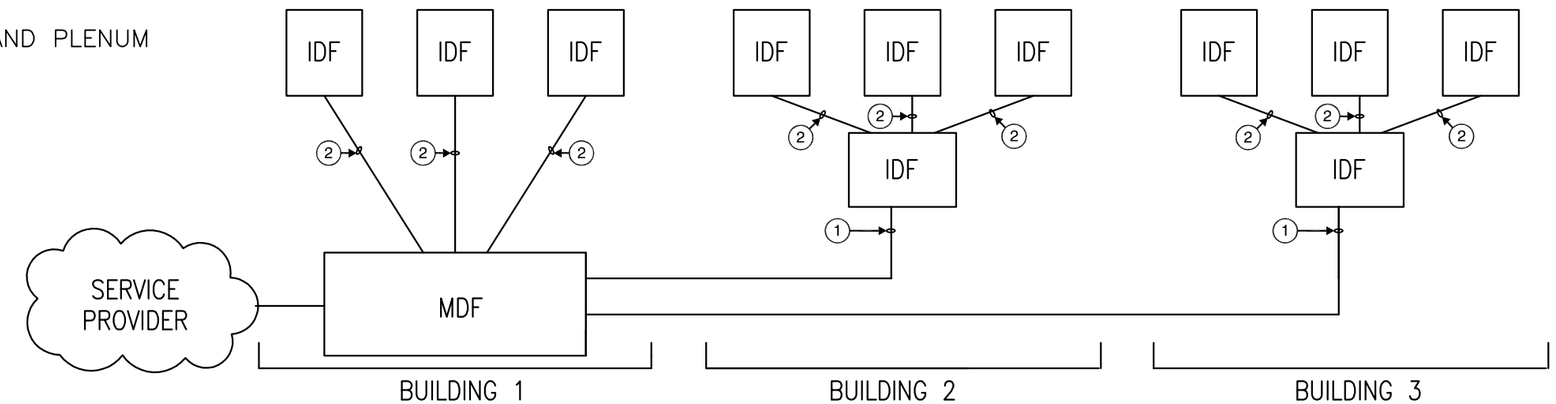

1/xx Campus Copper Topology Diagram

SCALE: N.T.S.

EXAMPLE

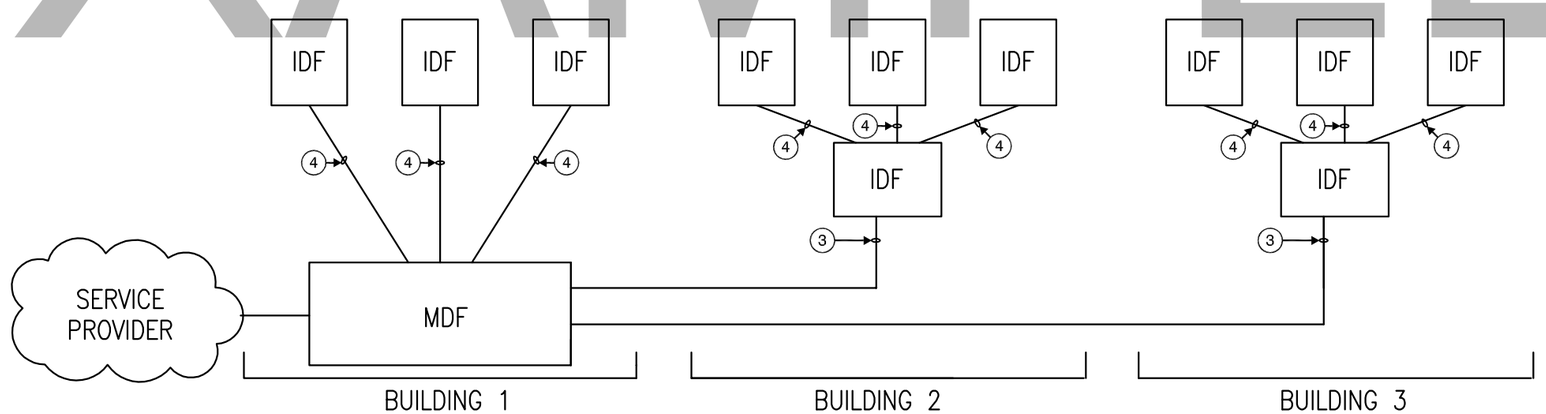

2/xx Campus Fiber Topology Diagram

SCALE: N.T.S.

COMBS Consulting Group
Technology & security
8200 IH-10 West, Ste. 103 Phone : 210-698-7887
San Antonio, Texas 78230

PROJECT NAME:

CITY OF SAN ANTONIO
STRUCTURED CABLING INFRASTRUCTURE STANDARDS

DATE: 03-04-14

SHEET: 11

SCALE: As Shown

1 CATEGORY 3 25-PAIR OSP

2 CATEGORY 3 25-PAIR PLENUM

3 ARMORED SINGLE MODE 48-STRAND INDOOR/OUTDOOR

4 ARMORED SINGLE MODE 24-STRAND PLENUM

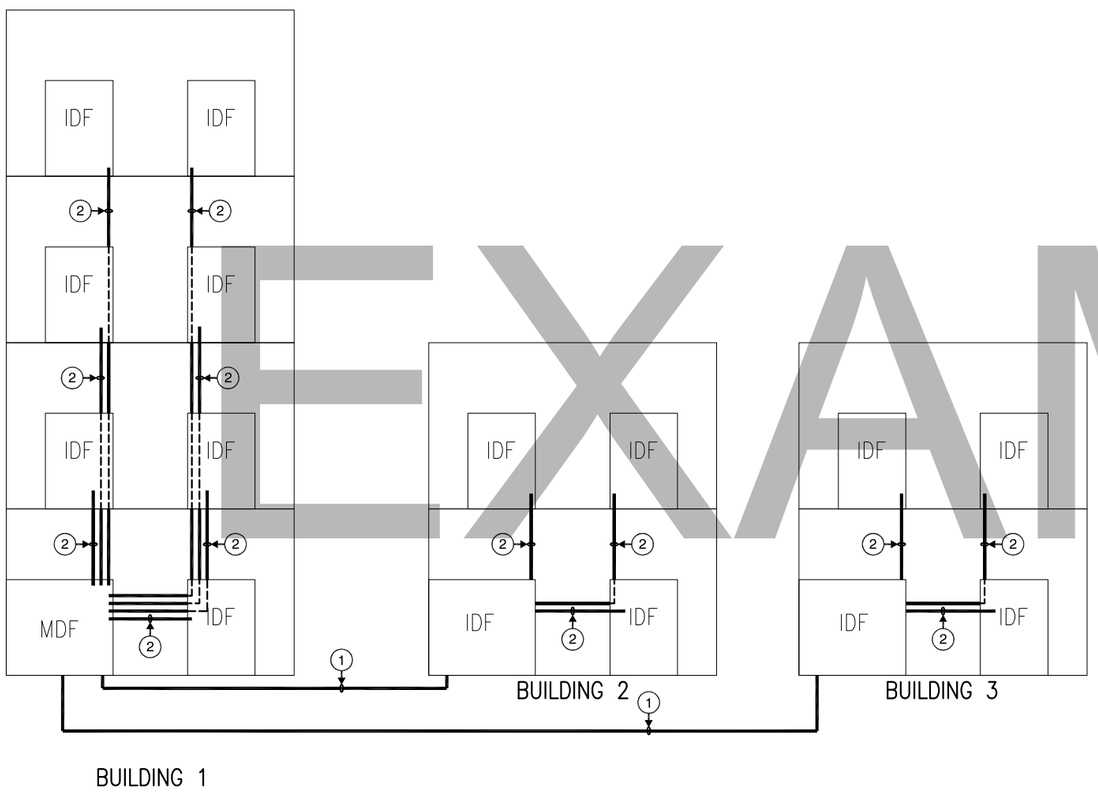

1 / xx Campus Copper Riser Diagram

SCALE: N.T.S.

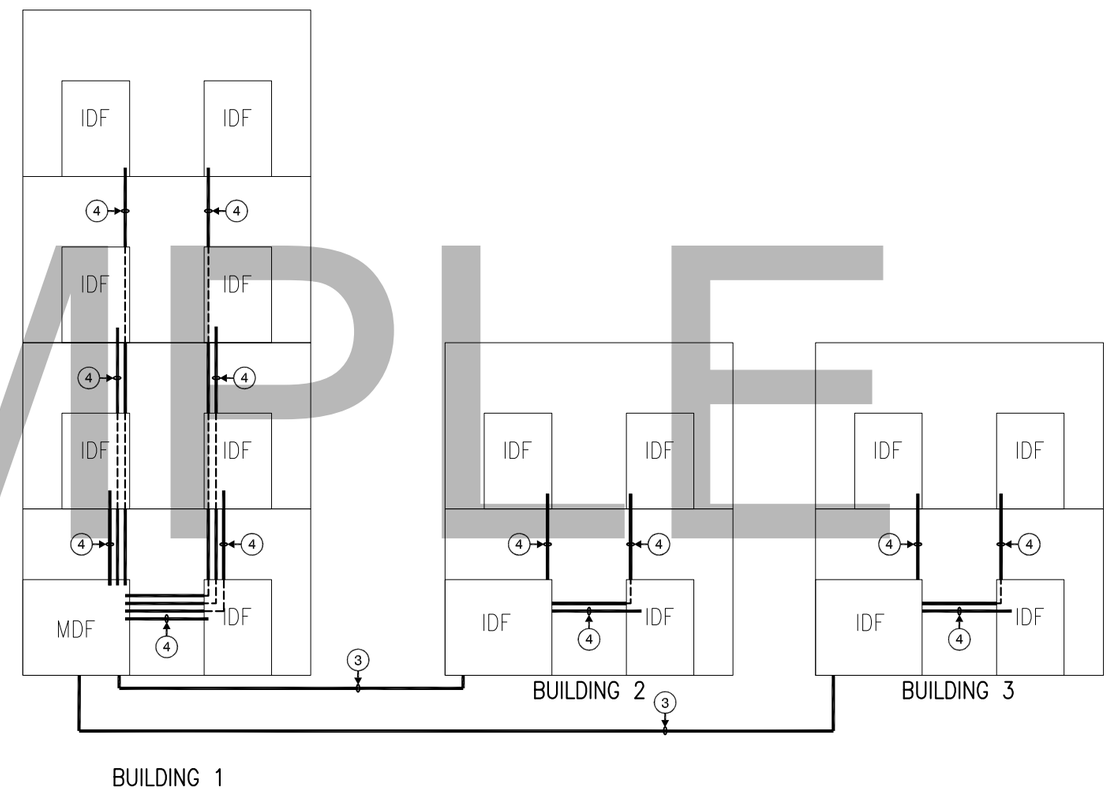

2 / xx Campus Fiber Riser Diagram

SCALE: N.T.S.

EXAMPLE

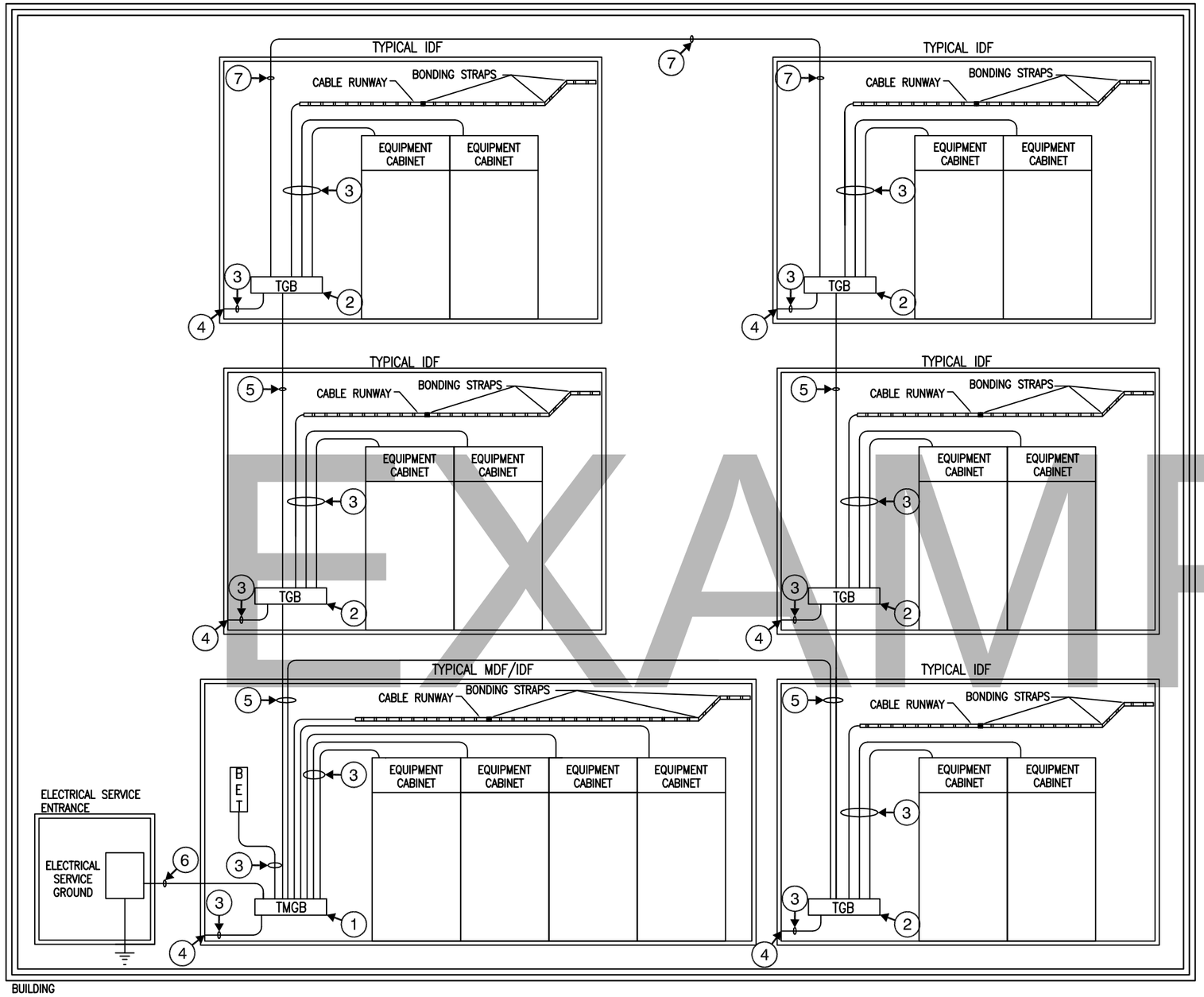

1. TELECOMMUNICATIONS MAIN GROUNDING BUS BAR (TMGB)
2. TELECOMMUNICATIONS GROUNDING BUS BAR (TGB)
3. TELECOMMUNICATIONS BONDING CONDUCTOR (TBC)
4. CONNECT TO GROUNDED BUILDING STEEL WHEN EXPOSED IN ROOM.
5. TELECOMMUNICATIONS BONDING BACKBONE (TBB)
6. TELECOMMUNICATIONS BONDING CONDUCTOR (TBC) BY ELECTRICAL CONTRACTOR
7. GROUNDING EQUALIZER CONDUCTOR (GEC)

TBB/GE linear length m (ft)	TBB/GE size (AWG)
less than 4 (13)	6
4 – 6 (14 – 20)	4
6 – 8 (21 – 26)	3
8 – 10 (27 – 33)	2
10 – 13 (34 – 41)	1
13 – 16 (42 – 52)	1/0
16 – 20 (53 – 66)	2/0
20 – 26 (67 – 84)	3/0
26 – 32 (85 – 105)	4/0
32 – 38 (106 – 125)	250 kcmil
38 – 46 (126 – 150)	300 kcmil
46 – 53 (151 – 175)	350 kcmil
53 – 76 (176 – 250)	500 kcmil
76 – 91 (251 – 300)	600 kcmil
Greater than 91 (301)	750 kcmil

EXAMPLE

1/xx Typical Grounding Diagram

SCALE: N.T.S.

COMBS Consulting Group, Technology & Security
8200 IH-10 West, Ste. 103 Phone : 210-698-7887
San Antonio, Texas 78230

PROJECT NAME:

CITY OF SAN ANTONIO
STRUCTURED CABLING INFRASTRUCTURE STANDARDS

DATE: 03-04-14

SHEET: 13

SCALE: As Shown

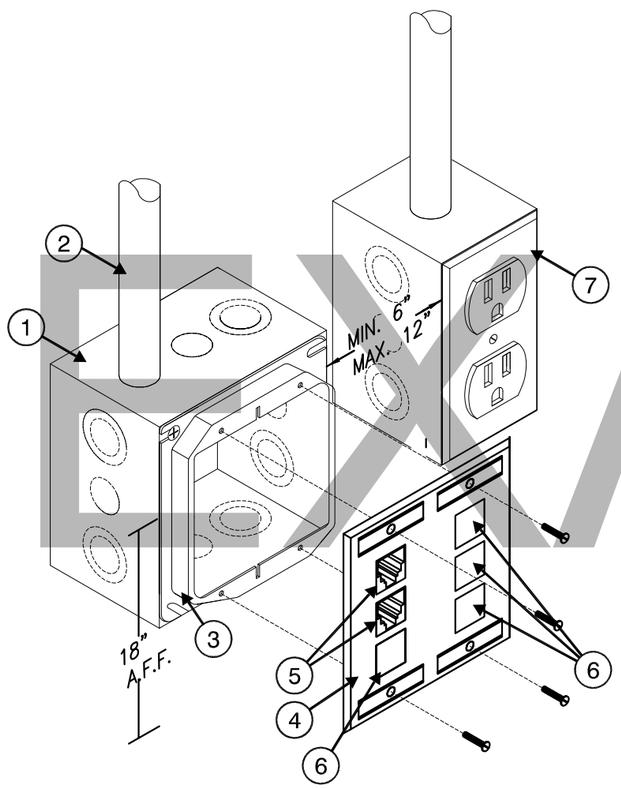

1. 4 11/16" x 4 11/16" x 2 1/8" RECESSED DOUBLE GANG BOX (BY DIV 26)
2. 1–INCH EMT CONDUIT FROM DOUBLE GANG BOX WITH 200 LBS PULL STRING AND NYLON BUSHING STUBBED OUT ABOVE ACCESSIBLE CEILING (BY DIV 26)
3. DOUBLE GANG PLASTER RING (BY DIV 26)
4. DOUBLE GANG WALL PLATE WITH DESIGNATION IN WINDOW (BY DIV 27)
5. DATA INSERT (BY DIV 27)
6. BLANK INSERT (BY DIV 27)
7. ELECTRICAL RECEPTACLE, GANG BOX AND CONDUIT SHOWN FOR REFERENCE ONLY (REFER TO DIV 26)

EXAMPLE

1 / xx

TYPCIAL OFFICE WORKSTATION CONFIGURATION

SCALE: N.T.S.

COMBS Consulting Group
Technology & Security
8200 I-10 West, Ste. 103 Phone : 210-698-7887
San Antonio, Texas 78230

PROJECT NAME:

CITY OF SAN ANTONIO
STRUCTURED CABLING INFRASTRUCTURE STANDARDS

DATE: 03-04-14

SHEET: 14

SCALE: As Shown

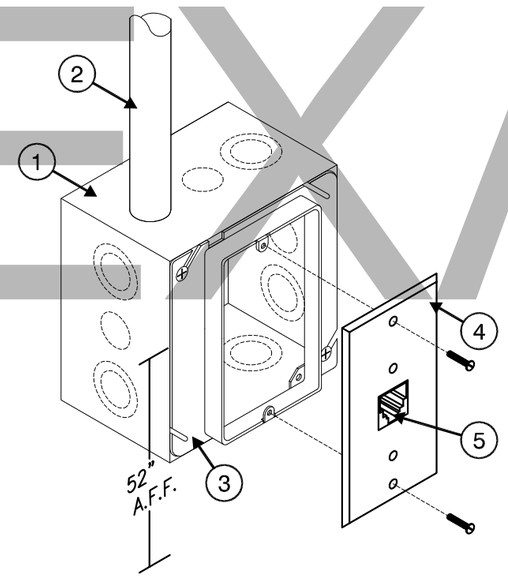

1. 4 11/16" x 4 11/16" x 2 1/8" RECESSED DOUBLE GANG BOX (BY DIV 26)
2. 1–INCH EMT CONDUIT FROM DOUBLE GANG BOX WITH 200 LBS PULL STRING AND NYLON BUSHING STUBBED OUT ABOVE ACCESSIBLE CEILING (BY DIV 26)
3. SINGLE GANG PLASTER RING (BY DIV 26)
4. SINGLE GANG WALL PLATE (BY DIV 27)
5. DATA INSERT (BY DIV 27)

EXAMPLE

1/xx TYPCIAL WALL PHONE CONFIGURATION

SCALE: N.T.S.

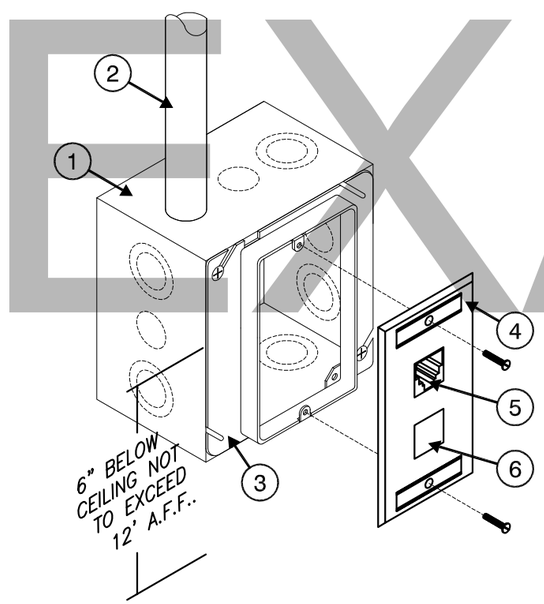

1. 4 11/16" x 4 11/16" x 2 1/8" RECESSED DOUBLE GANG BOX (BY DIV 26)
2. 1–INCH EMT CONDUIT FROM DOUBLE GANG BOX WITH 200 LBS PULL STRING AND NYLON BUSHING STUBBED OUT ABOVE ACCESSIBLE CEILING (BY DIV 26)
3. SINGLE GANG PLASTER RING (BY DIV 26)
4. SINGLE GANG WALL PLATE (BY DIV 27)
5. DATA INSERT (BY DIV 27)
6. BLANK INSERT (BY DIV 27)

EXAMPLE

1/xx TYPICAL WALL MOUNTED IP CAMERA/WIRELESS ACCESS POINT CONFIGURATION

SCALE: N.T.S.

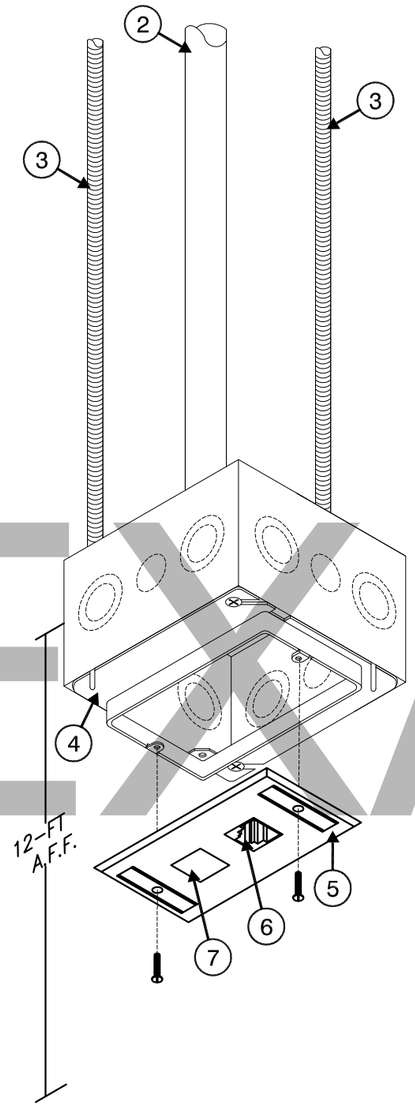

1. 4 11/16" x 4 11/16" x 2 1/8" RECESSED DOUBLE GANG BOX (BY DIV 26)
2. 1-INCH EMT CONDUIT FROM DOUBLE GANG BOX WITH 200 LBS PULL STRING AND NYLON BUSHING STUBBED OUT AT BUILDING STRUCTURE (BY DIV 26)
3. ALL THREAD TO BUILDING STRUCTURE.
4. SINGLE GANG PLASTER RING (BY DIV 26)
5. SINGLE GANG WALL PLATE (BY DIV 27)
6. DATA INSERT (BY DIV 27)
7. BLANK INSERT (BY DIV 27)

EXAMPLE

1/xx TYPICAL STRUCTURE MOUNTED IP CAMERA/WIRELESS ACCESS POINT CONFIGURATION

SCALE: N.T.S.

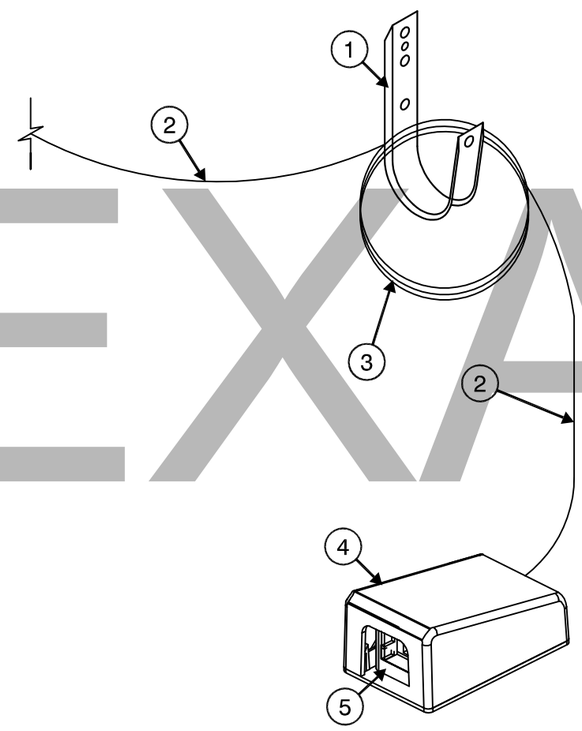

1. J–HOOK ABOVE ACCESSIBLE CEILING (BY DIV 27)
2. DATA CABLE ABOVE ACCESSIBLE CEILING (BY DIV 27)
3. 20–FEET SERVICE LOOP ABOVE ACCESSIBLE CEILING NEATLY COILED AND SECURED TO J–HOOK (BY DIV 27)
4. SURFACE MOUNT BOX ABOVE ACCESSIBLE CEILING AND SECURED TO BUILDING STRUCTURE. (BY DIV 27)
5. DATA INSERT (BY DIV 27)

EXAMPLE

1/xx TYPICAL ABOVE ACCESSIBLE CEILING DATA OUTLET

SCALE: N.T.S.

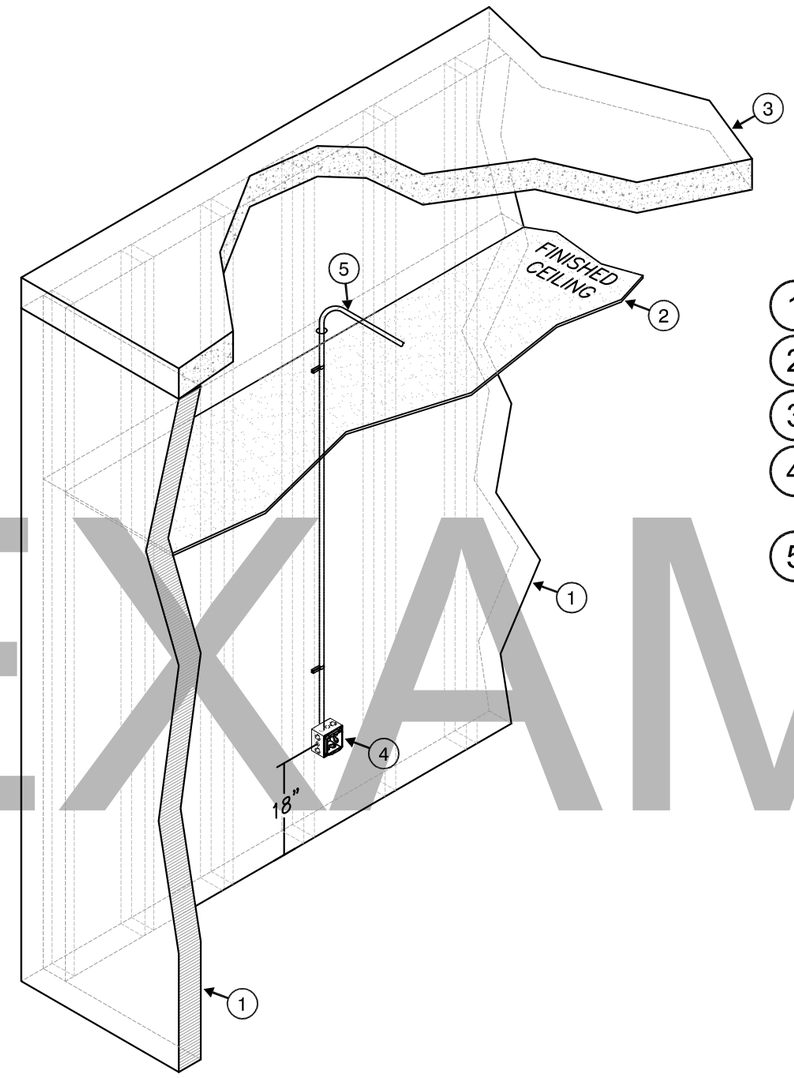

KEYED NOTES:

1. SCHEDULED WALL.
2. SCHEDULED CEILING.
3. SCHEDULED DECK ABOVE.
4. 4 11/16" x 4 11/16" x 2 1/8" RECESSED DOUBLE GANG BOX WITH DOUBLE GANG PLASTER RING (BY DIV 26)
5. 1-INCH EMT CONDUIT FROM DOUBLE GANG BOX WITH 200 LBS PULL STRING AND NYLON BUSHING STUBBED OUT ABOVE ACCESSIBLE CEILING IN THE SAME ROOM WHERE THE DEVICE IS LOCATED. IF THE ROOM WHERE THE DEVICE IS LOCATED DOES NOT HAVE AN ACCESSIBLE CEILING, THE CONDUIT SHALL ROUTE TO THE NEAREST ACCESSIBLE CEILING OFF OF A MAIN CORRIDOR. CONDUIT PATHWAY SHALL TAKE THE SHORTEST ROUTE TO THE APPLICABLE MDF/IDF ROOM TO MINIMIZE THE CABLE LENGTH. (BY DIV 26)

EXAMPLE

1/xx TYPICAL TECHNOLOGY CONDUIT ROUGH-IN

SCALE: N.T.S.

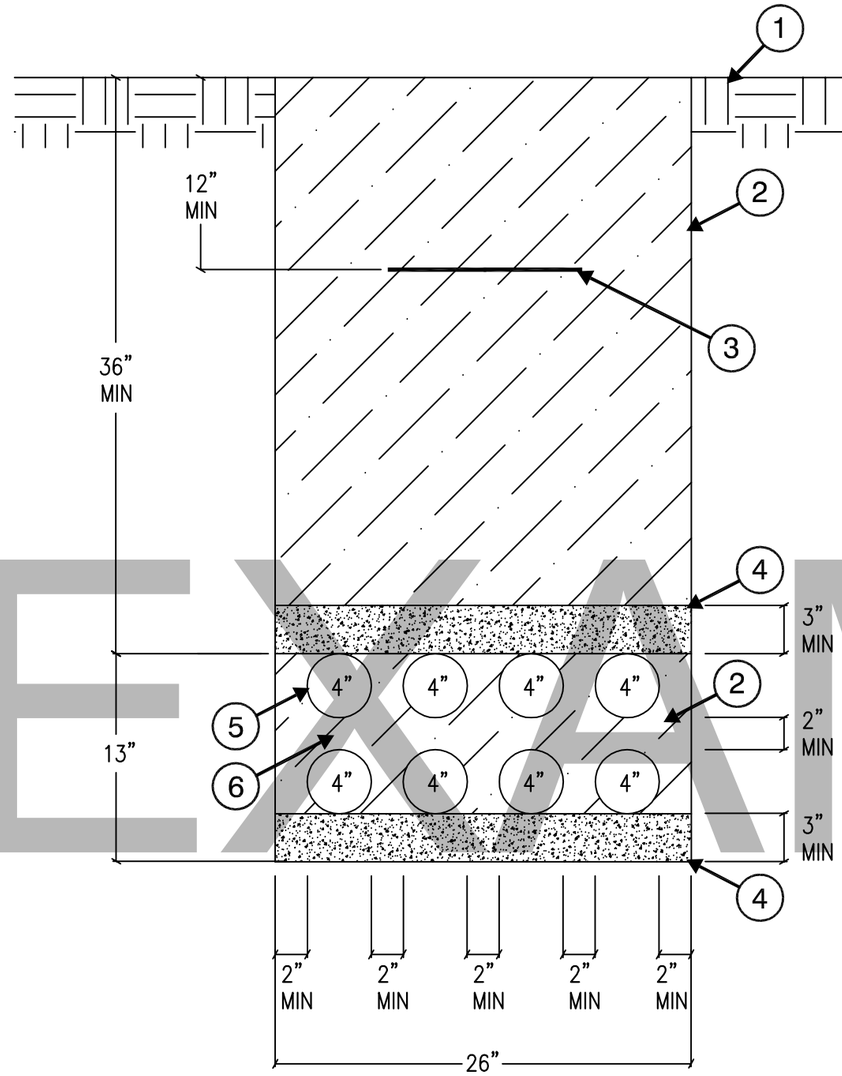

1. FINISHED GRADE
2. SELECT COMPACTED BACKFILL
3. DETECTABLE WARNING TAPE
4. COMPACTED SAND
5. COMMUNICATIONS CONDUIT
6. DUCT SPACERS (TYPICAL BETWEEN ALL CONDUITS)

EXAMPLE

1/xx TYPICAL COMMUNICATIONS DUCT BANK DETAIL - (8) 4-INCH CONDUITS

SCALE: N.T.S.

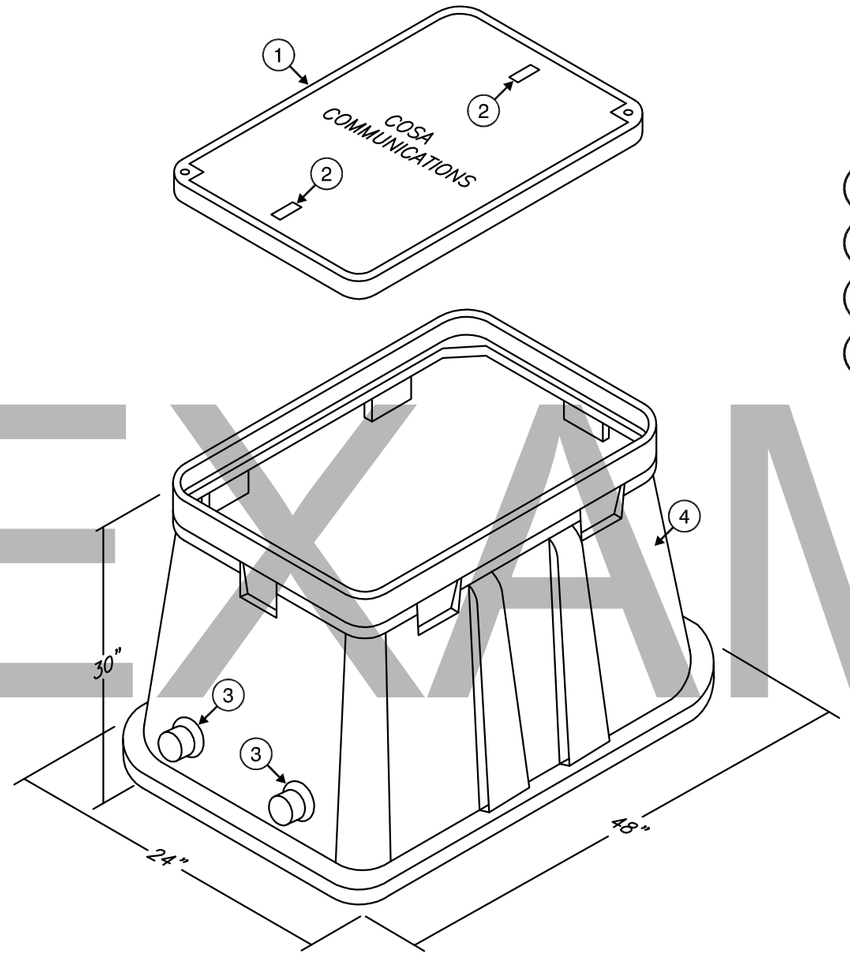

KEYED NOTES:

1. 40-INCH X 18-INCH H20 COVER.
2. LIFTING EYE.
3. 4-INCH TERMINATOR.
4. 48-INCH LONG X 24-INCH WIDE X 30-INCH DEEP H20 RATED HANDHOLE.

EXAMPLE

1 / xx

TYPICAL TECHNOLOGY HANDHOLES (HH)

SCALE: N.T.S.

COMBS Consulting Group technology & security
8200 IH-10 West, Ste. 103 Phone : 210-698-7887
San Antonio, Texas 78230

PROJECT NAME:

CITY OF SAN ANTONIO
STRUCTURED CABLING INFRASTRUCTURE STANDARDS

DATE: 03-04-14

SHEET: 21

SCALE: As Shown

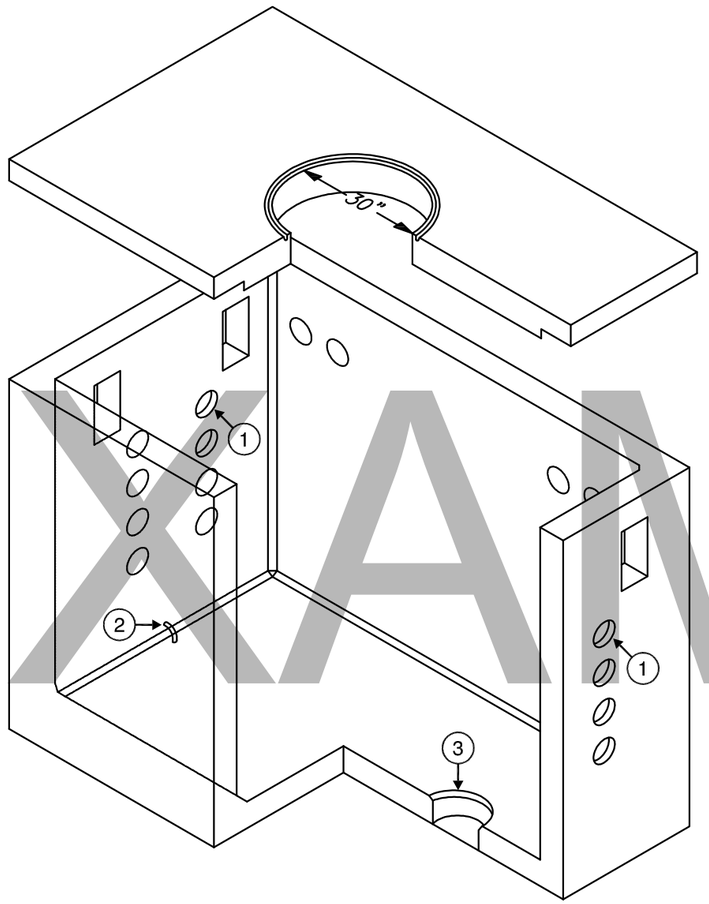

KEYED NOTES:

1. PRE CAST 4-INCH TERMINATORS.
2. PULLING EYES (ONE AT EACH END).
3. 13-INCH SUMP WITH GRATE.

EXAMPLE

1 / xx

TYPICAL TECHNOLOGY MAINTENANCE HOLES (MH)

SCALE: N.T.S.

COMBS Consulting Group technology & security
8200 I-10 West, Ste. 103 Phone : 210-698-7887
San Antonio, Texas 78230

PROJECT NAME:

CITY OF SAN ANTONIO
STRUCTURED CABLING INFRASTRUCTURE STANDARDS

DATE: 03-04-14

SHEET: 22

SCALE: As Shown

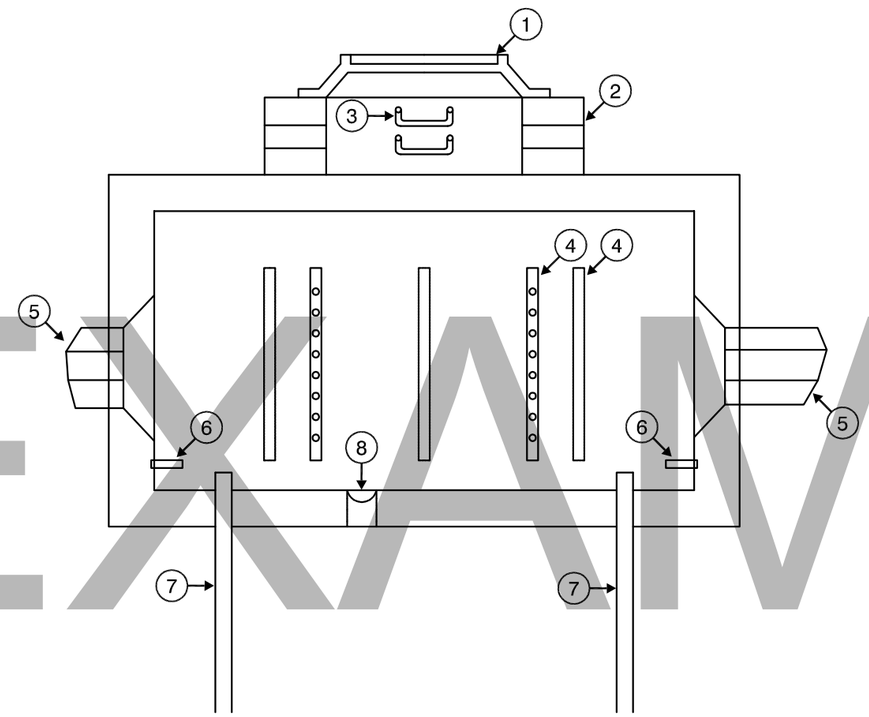

KEYED NOTES:

1. H-2O RATED COVER.
2. PRE CAST COLLAR.
3. STEPS (AS REQUIRED).
4. CABLE RACKS.
5. 4-INCH DUCTS.
6. PULLING EYES.
7. 3/4-INCH X 10-FT. GROUND ROD.
8. 13-INCH SUMP WITH GRATE.

EXAMPLE

1
xx

TYPICAL TECHNOLOGY MAINTENANCE HOLES (MH)

SCALE: N.T.S.

COMBS Consulting Group
Technology & Security
8200 IH-10 West, Ste. 103 Phone : 210-698-7887
San Antonio, Texas 78230

PROJECT NAME:

CITY OF SAN ANTONIO
STRUCTURED CABLING INFRASTRUCTURE STANDARDS

DATE: 03-04-14

SHEET: 23

SCALE: As Shown

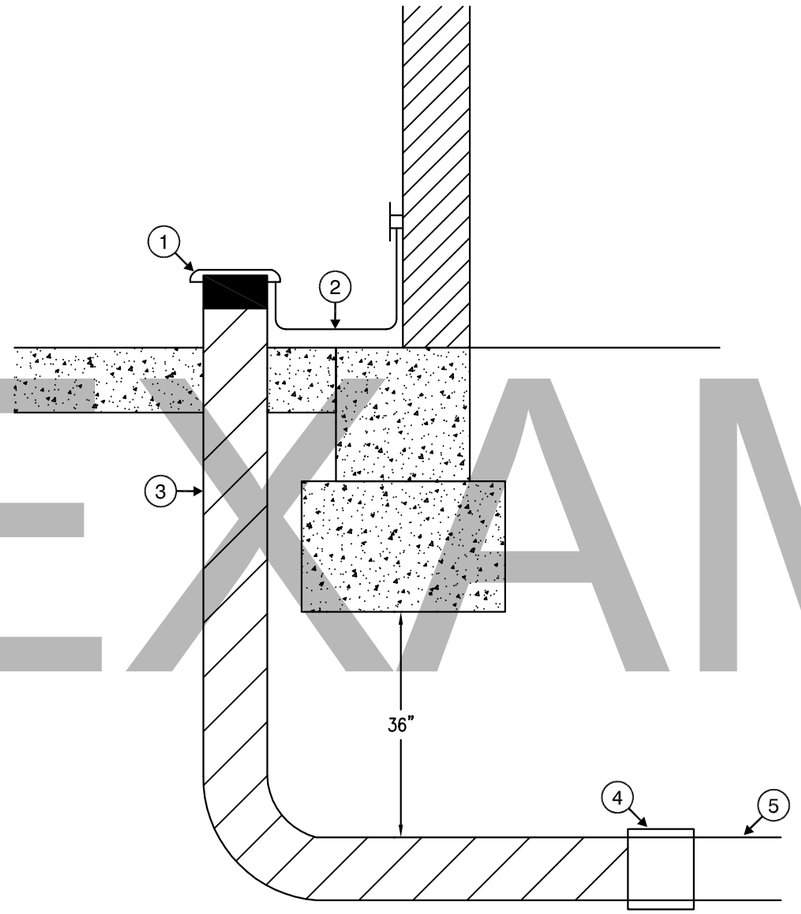

KEYED NOTES:

1. GROUNDING BUSHING.
2. #6 GROUND WIRE TO TMGB/TGB.
3. 4-INCH RIGID STEEL CONDUIT WRAPPED WITH PASCO PROTECTIVE TAPE SYSTEM.
4. PVC FEMALE ADAPTER.
5. SCHEDULE 40 PVC.

EXAMPLE

1/xx TYPICAL TECHNOLOGY DUCT ENTRY INTO BUILDING

SCALE: N.T.S.

COMBS Consulting Group
Technology & security
8200 IH-10 West, Ste. 103 Phone : 210-698-7887
San Antonio, Texas 78230

PROJECT NAME:

CITY OF SAN ANTONIO
STRUCTURED CABLING INFRASTRUCTURE STANDARDS

DATE: 03-04-14

SHEET: 24

SCALE: As Shown

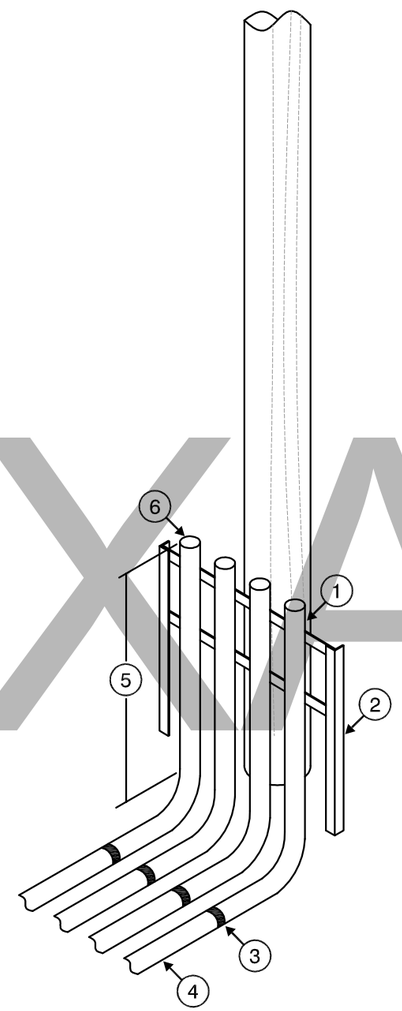

KEYED NOTES:

1. 4-INCH RIGID STEEL CONDUIT WRAPPED WITH PASCO PROTECTIVE TAPE SYSTEM.
2. UNISTRUT RACKING CONSTRUCTED IN FIELD.
3. PVC FEMALE ADAPTER.
4. 4-INCH SCHEDULE 40 PVC CONDUIT.
5. 4-INCH RIGID STEEL CONDUIT SHALL BE EXTENDED 36 INCHES ABOVE GRADE.
6. CONDUITS SHALL BE CAPPED AND SEALED TO PREVENT MOISTURE AND DEBRIS FROM ENTERING CONDUITS.

EXAMPLE

1/XX TYPICAL POLE RISER

SCALE: N.T.S.

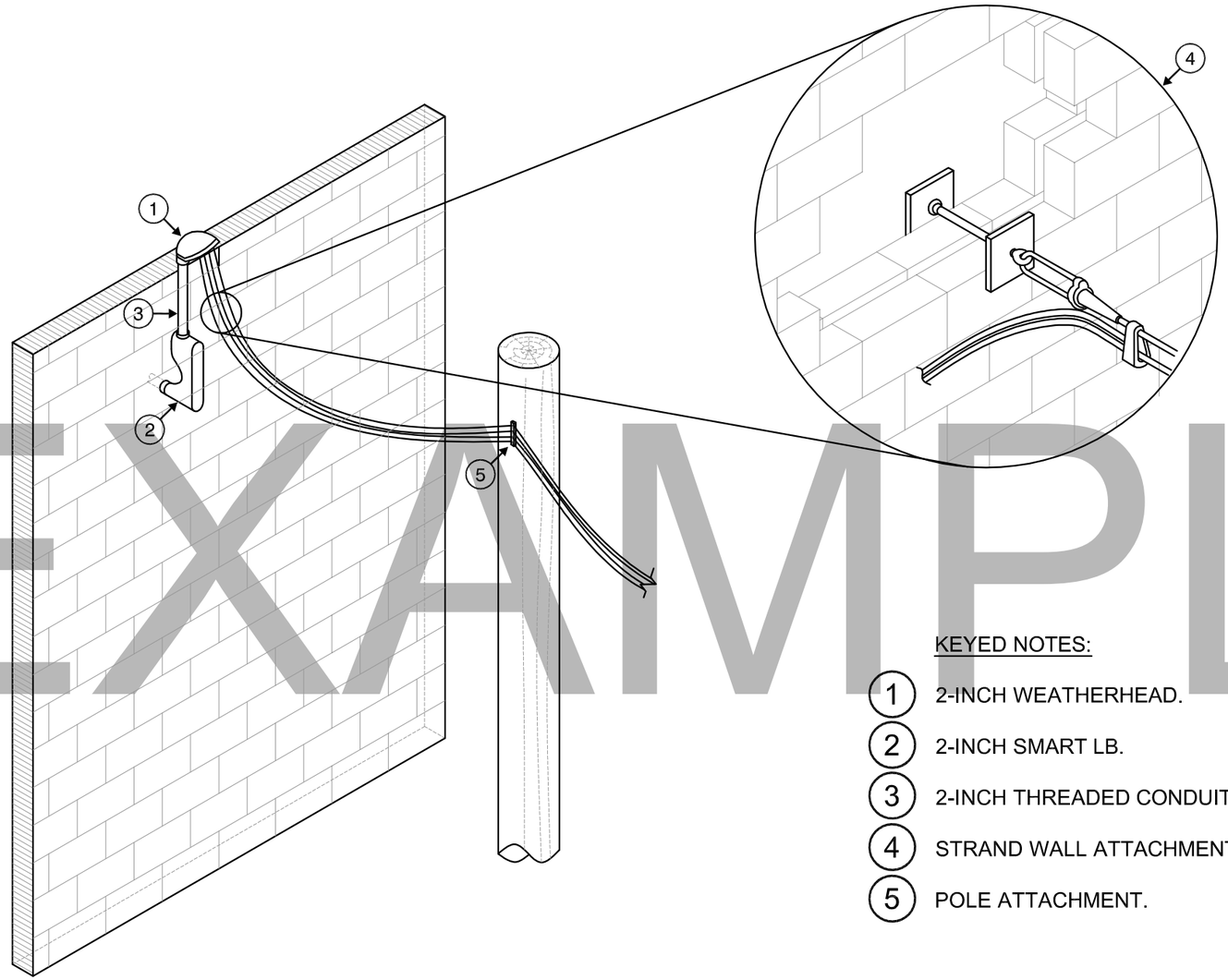

EXAMPLE

KEYED NOTES:

1. 2-INCH WEATHERHEAD.
2. 2-INCH SMART LB.
3. 2-INCH THREADED CONDUIT.
4. STRAND WALL ATTACHMENT.
5. POLE ATTACHMENT.

1/xx TYPICAL AERIAL BUILDING ENTRANCE

SCALE: N.T.S.

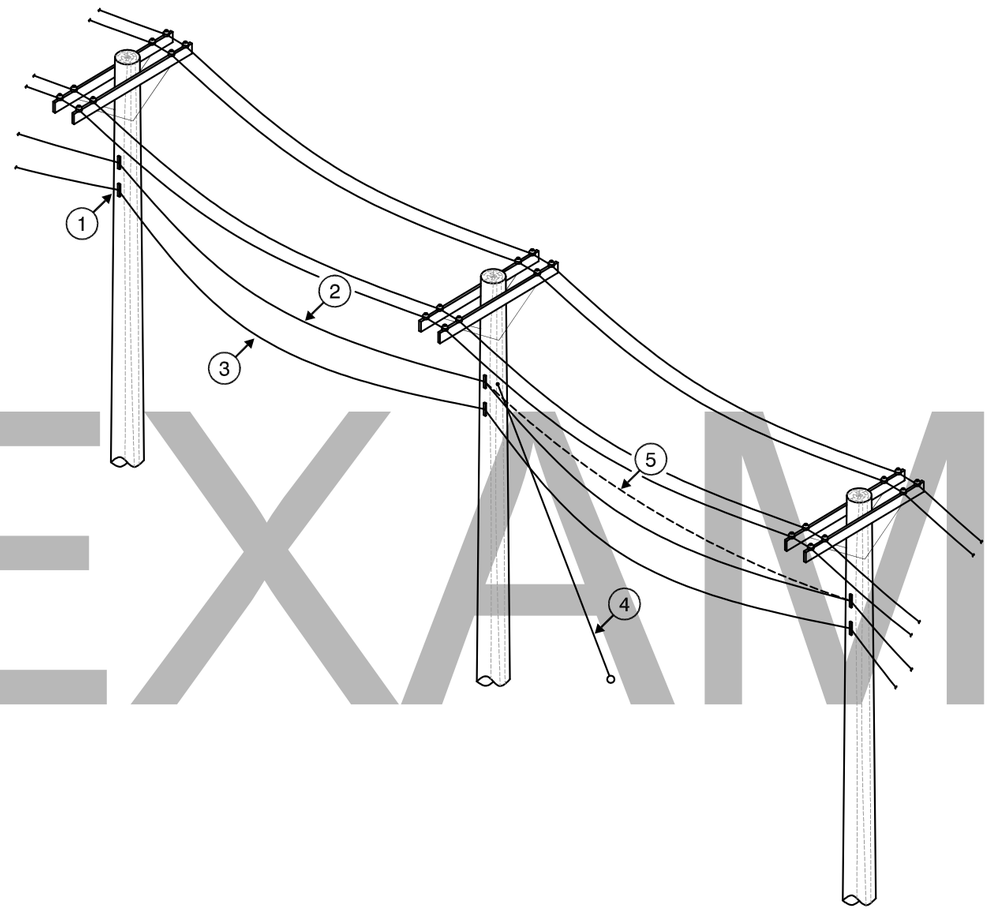

KEYED NOTES:

1. TYPICAL POLE ATTACHMENT.
2. FIBER LASHED TO MESSENGER.
3. COPPER LASHED TO MESSENGER.
4. DOWN-GUY AS REQUIRED BY POLE OWNER.
5. CABLE SAG CALCULATED ON SPAN LENGTH AND CABLE TYPE.

EXAMPLE

1 / xx

TYPICAL AERIAL SPAN

SCALE: N.T.S.

COMBS Consulting Group
Technology & security
8200 IH-10 West, Ste. 103 Phone : 210-698-7887
San Antonio, Texas 78230

PROJECT NAME:

CITY OF SAN ANTONIO
STRUCTURED CABLING INFRASTRUCTURE STANDARDS

DATE: 03-04-14

SHEET: 27

SCALE: As Shown

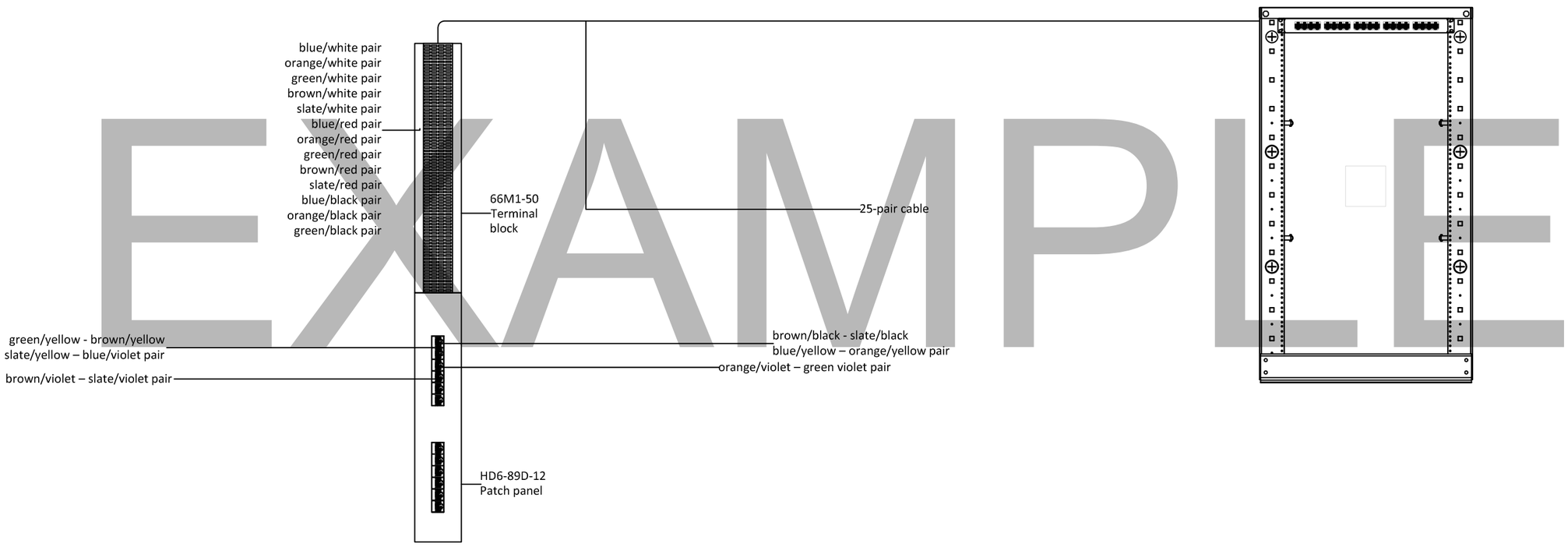

EXAMPLE

1
XX

TYPICAL TELCO DEMARCATION CABLE TERMINATION DETAIL

SCALE: N.T.S.

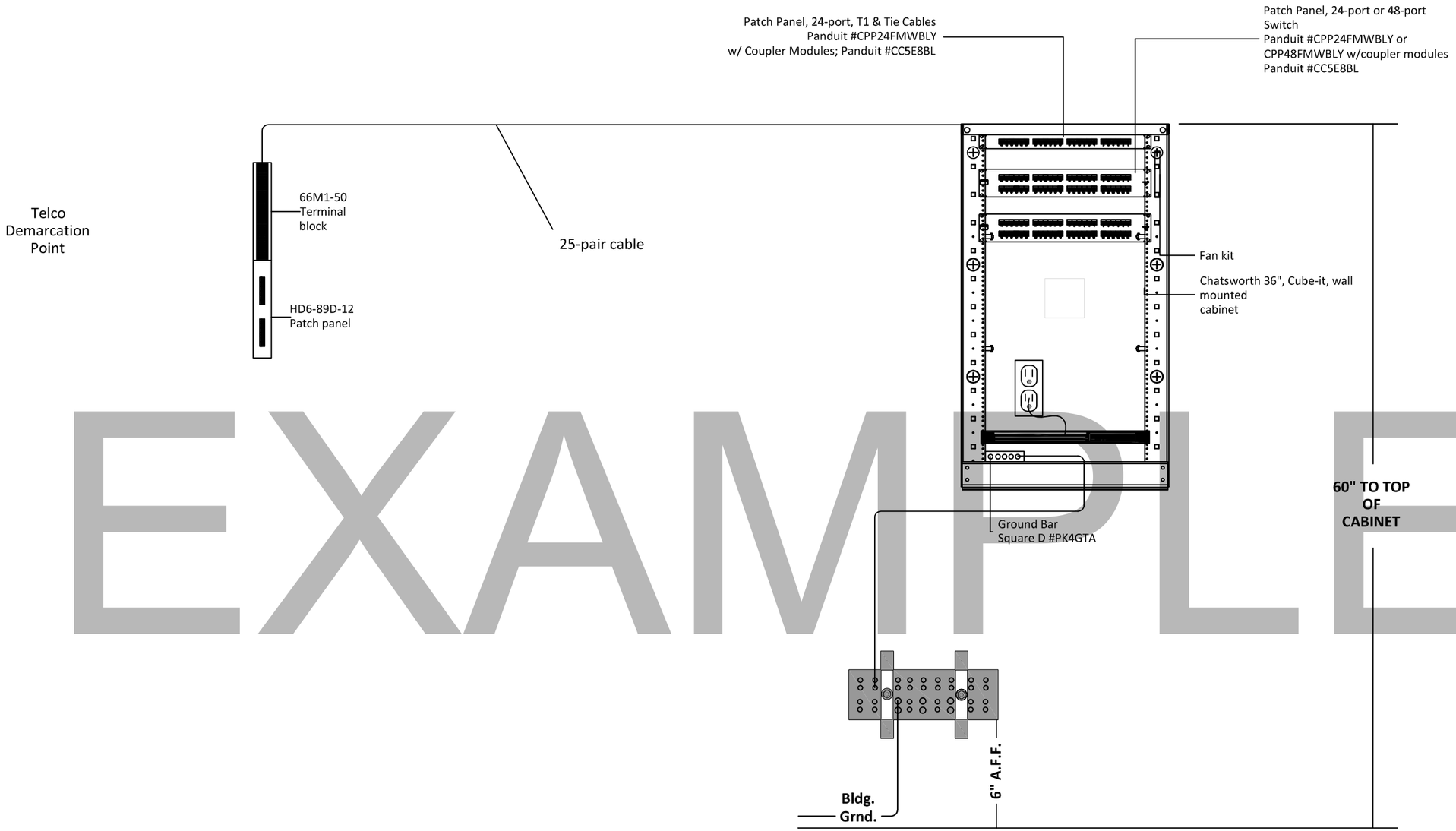

EXAMPLE

1
xx

TYPICAL CHATSWORTH CUBE-IT INSTALLATION

SCALE: N.T.S.

MATERIALS LEGEND

QTY.	DESCRIPTION	PRODUCT	MANUFACTURER/SOURCE	SIZE	COLOR	COMMENTS
SITE FURNITURE						
3	LITTER RECEPTACLES	STANDARD COSA PARKS BLACK RECEPTACLE	ZAMORANO ENTERPRISES - 210-924-2320 8603 S. FLORES ST., SAN ANTONIO, TX	-	BLACK	EMBEDMENT MOUNT, CONTRACTOR SHALL INSTALL RECEPTACLES.
5	RECYCLE LITTER RECEPTACLES	STANDARD COSA PARKS BLUE RECEPTACLE	ZAMORANO ENTERPRISES - 210-924-2320 8603 S. FLORES ST., SAN ANTONIO, TX	-	BLUE	EMBEDMENT MOUNT, CONTRACTOR SHALL INSTALL RECEPTACLES.
4	PLAYERS BENCH - TENNIS / BASKETBALL COURTS	FIXED PLAYERS BENCH - MODEL BNF0701A	BISON, INC. PARK PLACE REC. DESIGN - 1-800-626-0238	7.5' LENGTH	-	IN GROUND MOUNT
2	PLAYERS BENCH - SOCCER FIELD	FIXED PLAYERS BENCH - MODEL BNF2101A	BISON, INC. PARK PLACE REC. DESIGN - 1-800-626-0238	21' LENGTH	-	IN GROUND MOUNT
8	BBQ GRILLS (TYPE A)	PILOT ROCK MULTI-LEVEL GRILL - MODEL Q-20 B2	RJ THOMAS MFG. CO. - 1-800-762-5002	15"X20"X10"	-	EMBEDMENT MOUNT
1	BBQ GRILLS (TYPE B)	PILOT ROCK MULTI-LEVEL GRILL - MODEL P-1000/S B13	RJ THOMAS MFG. CO. - 1-800-762-5002	28"X36"X10"	-	EMBEDMENT MOUNT
2	BBQ GRILLS (TYPE C)	PILOT ROCK ACCESSIBLE PARK GRILL - MODEL ASW-20 B2	RJ THOMAS MFG. CO. - 1-800-762-5002	15 1/4"X20" 6" OR 10" SIDES	-	EMBEDMENT MOUNT
3	PET STATIONS	PD-KIT-G & WR-10-G (PARK DISPENSER KIT & RECEPTACLE)	MUTT MITTS - 1-800-697-6084	-	GREEN	INSTALL PER MANUFACTURER'S SPECIFICATIONS.
4	TENNIS NET POSTS	EDWARDS 3" ROUND INTERNAL WIND NET POST - ITEM 6601 W/ 3" ROUND SLEEVES - ITEM 7440 (SOLD IN PAIRS)	SULLIVAN SPORTS - 1-800-543-0926	3" POST	GREEN	INSTALL PER MANUFACTURER'S SPECIFICATIONS.
2 2 2	TENNIS NETS CENTER HOLD DOWN STRAP CENTER STRAP ANCHOR	SULLIVANS PREMIER DM - ITEM 6502 EDWARDS 2" NET CENTER STRAP - ITEM 6601 GALV. CENTER STRAP ANCHOR - ITEM 7450	SULLIVAN SPORTS - 1-800-543-0926	-	-	INSTALL PER MANUFACTURER'S SPECIFICATIONS.
4	BASKETBALL GOAL	4 1/2" HEAVY DUTY PLAYGROUND SYSTEM - PR55 PACKAGE WITH BA777UP - POLE, BA445 BACKBOARD, BA39U GOAL	BISON, INC. PARK PLACE REC. DESIGN - 1-800-626-0238	-	-	INSTALL PER MANUFACTURER'S SPECIFICATIONS.
4	BASKETBALL GOAL CHAIN NET	PREMIUM STEEL PLAYGROUND SAFETY NET - BA50	BISON, INC. PARK PLACE REC. DESIGN - 1-800-626-0238	-	-	INSTALL PER MANUFACTURER'S SPECIFICATIONS.
1 PAIR	SOCCER GOALS	ALL ALUMINUM NO-TIP PORTABLE SOCCER GOALS MODEL SC2480PA44XL	BISON, INC. PARK PLACE REC. DESIGN - 1-800-626-0238	24' W X 8' H	-	INSTALL PER MANUFACTURER'S SPECIFICATIONS.
1	5 ROW BLEACHER	NATIONAL REP SERIES ALUMINUM BLEACHERS - MODEL NR-0515 AMC	GT GRANDSTANDS REP. - DALLAS SULLIVENT - 940-282-9600	15' LENGTH	-	INSTALL PER MANUFACTURER'S SPECIFICATIONS.
1	SHADE STRUCTURE AT PLAY AREA (ADD. ALT. #1)	6 POST HEXAGONAL SHADE STRUCTURE	SHADEPRO, LLC - 210-651-1041 OR	56' DIAMETER 13' ENTRY HT.	SHADE FABRIC - GUN METAL GREY POSTS - TRUE BLUE	INSTALL PER MANUFACTURER'S SPECIFICATIONS. OBTAIN FROM MANUFACTURER A TEXAS ENGINEER'S PLAN FOR STRUCTURAL FOOTINGS. PROVIDE SHOP & PLAN LAYOUT DRAWINGS TO THE LANDSCAPE ARCHITECT FOR REVIEW PRIOR TO FABRICATION.
			MODERN SHADE - T.F. HARPER 1-800-976-0107 OR	56' DIAMETER 13' ENTRY HT.	SHADE FABRIC - GUN METAL POSTS - BLUE	
			TENSO SHADE - 210-888-0128	56' DIAMETER 13' ENTRY HT.	SHADE FABRIC - STEEL GREY POSTS - BLUE	
TENNIS COURT RESURFACING SYSTEM						
-	TENNIS COURT ACRYLIC COLOR COURT SURFACE	COURT PATCHING SPORTMASTER CRACK MAGIC, ACRYLIC CRACK PATCH, ACRYLIC PATCH BINDER COURT RESURFACER SPORTMASTER ACRYLIC RESURFACER - NEUTRAL COLOR COURT SURFACE COLOR COATING SYSTEM SPORTMASTER COLOR PLUS SYSTEM LINE PAINT SPORTMASTER T/C TEXTURED WHITE LINE PAINT	SPORTMASTER - 1-800-345-7325	-	1 DARK GREEN - COURT SURFACES BLUE - TENNIS COURTS RED - BASKETBALL COURT CENTER CIRCLE & FREE THROW AREA	INSTALL PER MANUFACTURER'S SPECIFICATIONS BY A SPORT MASTER CERTIFIED INSTALLER. REFER ALSO TO SPECIFICATIONS.

NOTE: FOR ANY PRODUCT SUBSTITUTIONS, CONTACT THE LANDSCAPE ARCHITECT FOR APPROVALS BEFORE PURCHASING & INSTALLATION.

REGISTERED LANDSCAPE ARCHITECT
LAWRENCE C. CLARK
STATE OF TEXAS
08-05-2014

Date:	Revisions/Submissions
8-5-14	1 ADDENDUM NO. 1

CITY OF SAN ANTONIO
TRANSPORTATION & CAPITAL IMPROVEMENTS DEPARTMENT
114 W. COMMERCE ST. SAN ANTONIO, TX 78205
TEL. (210) 207-0187

NORMOYLE PARK
BID PACKAGE B
700 CULBERSON
SAN ANTONIO, TEXAS 78211
MATERIALS LEGEND

SD
1.00

BENDER WELLS CLARK DESIGN
830 NORTH ALAMO STREET
SAN ANTONIO, TX 78215
210-692-9221 FAX: 210-223-8582

Designed By: BWCD
Drawn By: IP
Date: 06-02-14
Project No.: COSA #40-00378
Filename: -

NOTES:
1. ALL LINES SHALL BE 4" WIDE WHITE LINES.
2. USE ATHLETIC FIELD MARKING PAINT SUITABLE FOR APPLICATION.
3. REFER TO THE MATERIALS LEGEND FOR SOCCER GOALS & NETS.
4. EJ - REFERS TO EXPANSION JOINTS.

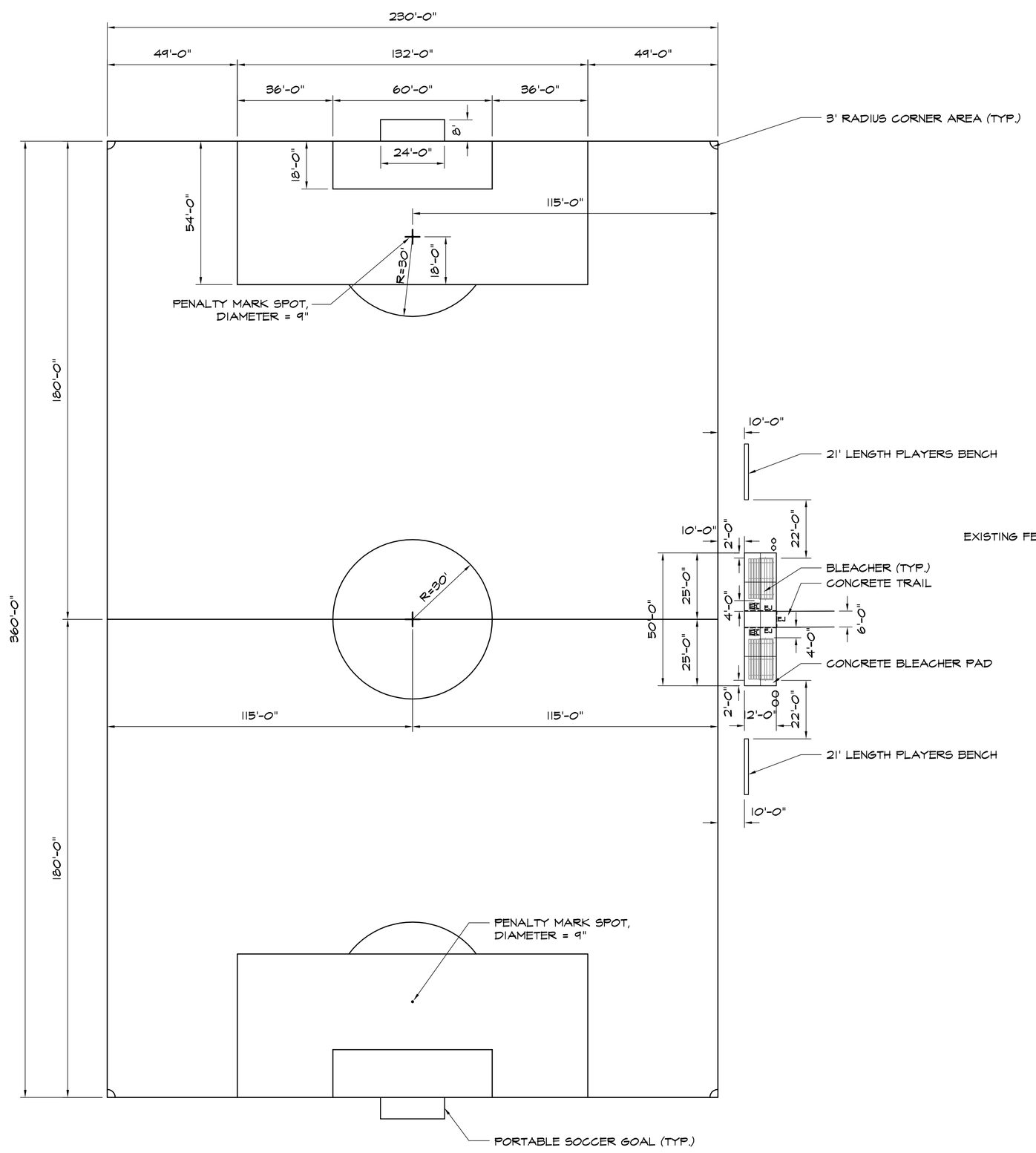

1 SOCCER FIELD MARKINGS

1" = 30'-0"

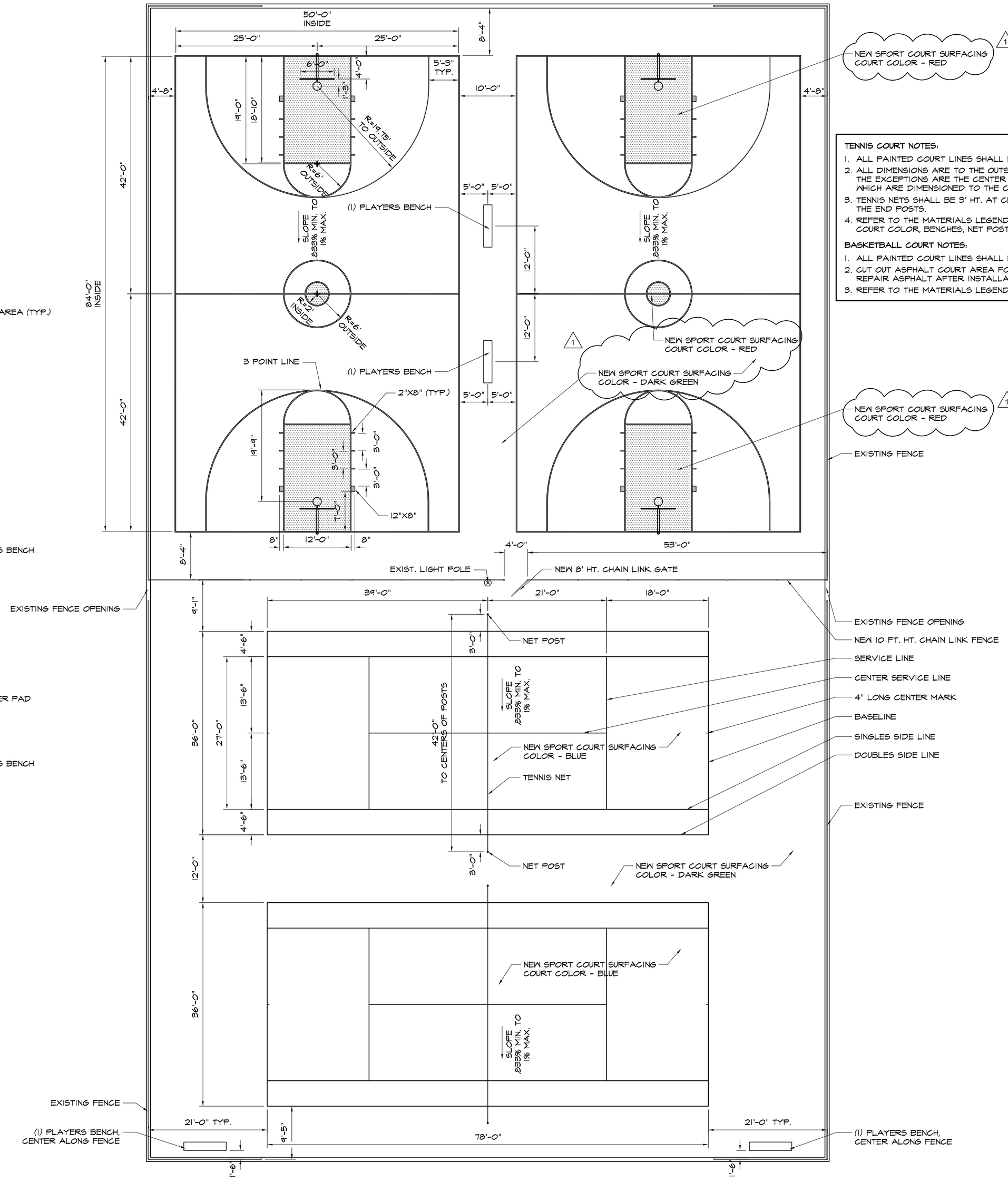

2 TENNIS & BASKETBALL COURTS

1" = 10'-0"

TENNIS COURT NOTES:
1. ALL PAINTED COURT LINES SHALL BE 2" WIDE WHITE LINES.
2. ALL DIMENSIONS ARE TO THE OUTSIDE EDGE OF THE PLAYING LINES. THE EXCEPTIONS ARE THE CENTER MARK AND CENTER SERVICE LINES WHICH ARE DIMENSIONED TO THE CENTER OF THE LINES.
3. TENNIS NETS SHALL BE 3' HT. AT CENTER OF COURT AND 3'-6" HT. AT THE END POSTS.
4. REFER TO THE MATERIALS LEGEND FOR COURT SURFACING, COURT COLOR, BENCHES, NET POSTS, & NETS.

BASKETBALL COURT NOTES:
1. ALL PAINTED COURT LINES SHALL BE 2" WIDE WHITE LINES.
2. CUT OUT ASPHALT COURT AREA FOR GOAL POST FOOTINGS AND REPAIR ASPHALT AFTER INSTALLATION OF POSTS.
3. REFER TO THE MATERIALS LEGEND FOR BASKETBALL GOALS.

REGISTERED LANDSCAPE ARCHITECT
CHRISTOPHER C. CLARK
STATE OF TEXAS
08-05-2014

Date:	Revisions/Submissions
8-5-14	1 ADDENDUM NO. 1

CITY OF SAN ANTONIO
TRANSPORTATION & CAPITAL IMPROVEMENTS DEPARTMENT
114 W. COMMERCE ST. SAN ANTONIO, TX 78205
TEL. (210) 207-0187

NORMOYLE PARK
BID PACKAGE B
700 CULBERSON
SAN ANTONIO, TEXAS 78211
SITE DETAILS

SD
2.00

BENDER WELLS CLARK DESIGN
830 NORTH ALAMO STREET
SAN ANTONIO, TX 78215
210-692-9221 FAX: 210-223-8582

Designed By:	BWCD
Drawn By:	IP
Date:	06-02-14
Project No. :	COSA #40-00378
Filename:	-