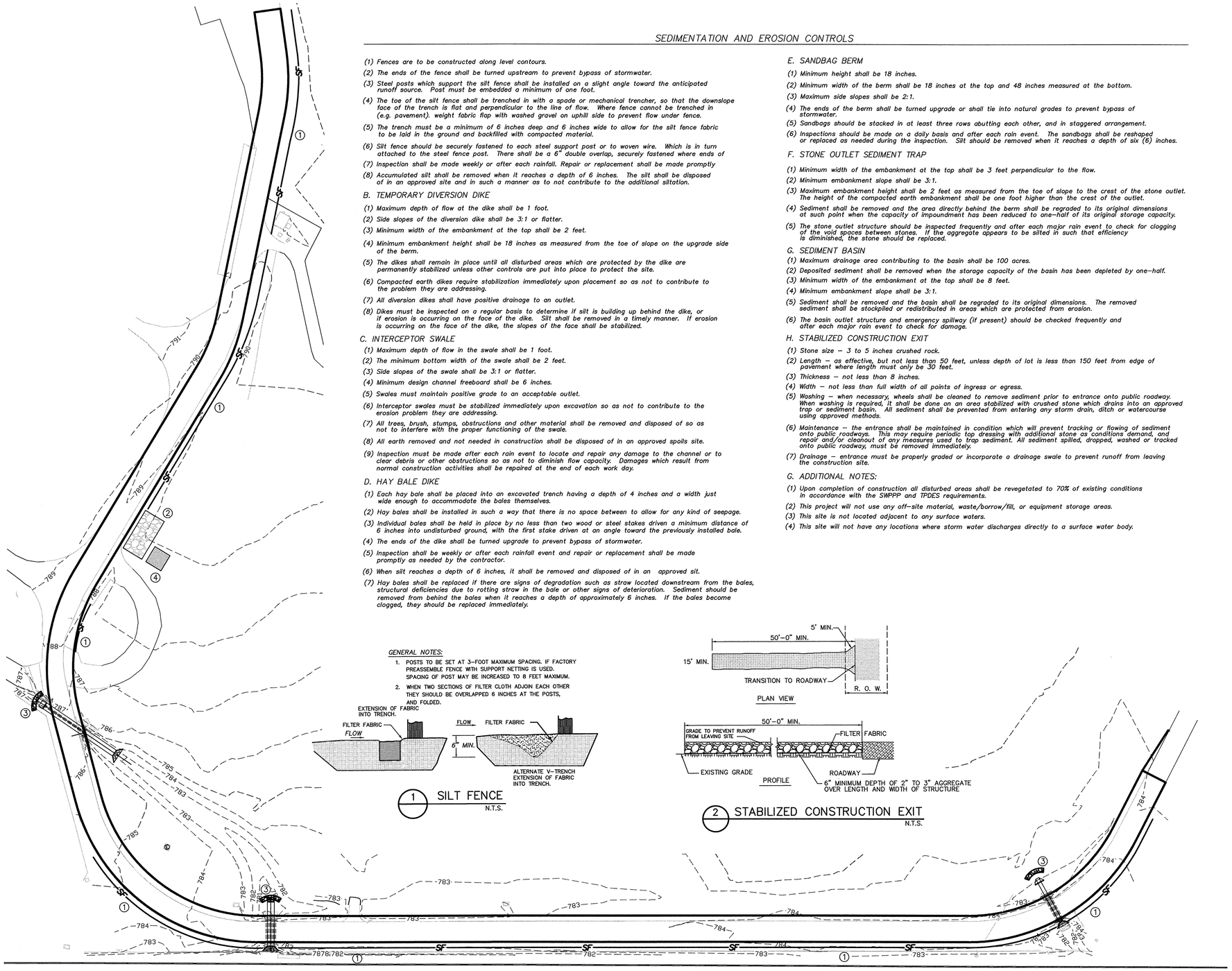

SEDIMENTATION AND EROSION CONTROLS

(1) Fences are to be constructed along level contours.

(2) The ends of the fence shall be turned upstream to prevent bypass of stormwater.

(3) Steel posts which support the silt fence shall be installed on a slight angle toward the anticipated runoff source. Post must be embedded a minimum of one foot.

(4) The toe of the silt fence shall be trenched in with a spade or mechanical trencher, so that the downslope face of the trench is flat and perpendicular to the line of flow. Where fence cannot be trenched in (e.g. pavement). weight fabric flap with washed gravel on uphill side to prevent flow under fence.

(5) The trench must be a minimum of 6 inches deep and 6 inches wide to allow for the silt fence fabric to be laid in the ground and backfilled with compacted material.

(6) Silt fence should be securely fastened to each steel support post or to woven wire. Which is in turn attached to the steel fence post. There shall be a 6" double overlap, securely fastened where ends of

(7) Inspection shall be made weekly or after each rainfall. Repair or replacement shall be made promptly

(8) Accumulated silt shall be removed when it reaches a depth of 6 inches. The silt shall be disposed of in an approved site and in such a manner as to not contribute to the additional siltation.

B. TEMPORARY DIVERSION DIKE

(1) Maximum depth of flow at the dike shall be 1 foot.

(2) Side slopes of the diversion dike shall be 3:1 or flatter.

(3) Minimum width of the embankment at the top shall be 2 feet.

(4) Minimum embankment height shall be 18 inches as measured from the toe of slope on the upgrade side of the berm.

(5) The dikes shall remain in place until all disturbed areas which are protected by the dike are permanently stabilized unless other controls are put into place to protect the site.

(6) Compacted earth dikes require stabilization immediately upon placement so as not to contribute to the problem they are addressing.

(7) All diversion dikes shall have positive drainage to an outlet.

(8) Dikes must be inspected on a regular basis to determine if silt is building up behind the dike, or if erosion is occurring on the face of the dike. Silt shall be removed in a timely manner. If erosion is occurring on the face of the dike, the slopes of the face shall be stabilized.

C. INTERCEPTOR SWALE

(1) Maximum depth of flow in the swale shall be 1 foot.

(2) The minimum bottom width of the swale shall be 2 feet.

(3) Side slopes of the swale shall be 3:1 or flatter.

(4) Minimum design channel freeboard shall be 6 inches.

(5) Swales must maintain positive grade to an acceptable outlet.

(6) Interceptor swales must be stabilized immediately upon excavation so as not to contribute to the erosion problem they are addressing.

(7) All trees, brush, stumps, obstructions and other material shall be removed and disposed of so as not to interfere with the proper functioning of the swale.

(8) All earth removed and not needed in construction shall be disposed of in an approved spoils site.

(9) Inspection must be made after each rain event to locate and repair any damage to the channel or to clear debris or other obstructions so as not to diminish flow capacity. Damages which result from normal construction activities shall be repaired at the end of each work day.

D. HAY BALE DIKE

(1) Each hay bale shall be placed into an excavated trench having a depth of 4 inches and a width just wide enough to accommodate the bales themselves.

(2) Hay bales shall be installed in such a way that there is no space between to allow for any kind of seepage.

(3) Individual bales shall be held in place by no less than two wood or steel stakes driven a minimum distance of 6 inches into undisturbed ground, with the first stake driven at an angle toward the previously installed bale.

(4) The ends of the dike shall be turned upgrade to prevent bypass of stormwater.

(5) Inspection shall be weekly or after each rainfall event and repair or replacement shall be made promptly as needed by the contractor.

(6) When silt reaches a depth of 6 inches, it shall be removed and disposed of in an approved sit.

(7) Hay bales shall be replaced if there are signs of degradation such as straw located downstream from the bales, structural deficiencies due to rotting straw in the bale or other signs of deterioration. Sediment should be removed from behind the bales when it reaches a depth of approximately 6 inches. If the bales become clogged, they should be replaced immediately.

E. SANDBAG BERM

(1) Minimum height shall be 18 inches.

(2) Minimum width of the berm shall be 18 inches at the top and 48 inches measured at the bottom.

(3) Maximum side slopes shall be 2:1.

(4) The ends of the berm shall be turned upgrade or shall tie into natural grades to prevent bypass of stormwater.

(5) Sandbags should be stacked in at least three rows abutting each other, and in staggered arrangement.

(6) Inspections should be made on a daily basis and after each rain event. The sandbags shall be reshaped or replaced as needed during the inspection. Silt should be removed when it reaches a depth of six (6) inches.

F. STONE OUTLET SEDIMENT TRAP

(1) Minimum width of the embankment at the top shall be 3 feet perpendicular to the flow.

(2) Minimum embankment slope shall be 3:1.

(3) Maximum embankment height shall be 2 feet as measured from the toe of slope to the crest of the stone outlet. The height of the compacted earth embankment shall be one foot higher than the crest of the outlet.

(4) Sediment shall be removed and the area directly behind the berm shall be regraded to its original dimensions at such point when the capacity of impoundment has been reduced to one-half of its original storage capacity.

(5) The stone outlet structure should be inspected frequently and after each major rain event to check for clogging of the void spaces between stones. If the aggregate appears to be silted in such that efficiency is diminished, the stone should be replaced.

G. SEDIMENT BASIN

(1) Maximum drainage area contributing to the basin shall be 100 acres.

(2) Deposited sediment shall be removed when the storage capacity of the basin has been depleted by one-half.

(3) Minimum width of the embankment at the top shall be 8 feet.

(4) Minimum embankment slope shall be 3:1.

(5) Sediment shall be removed and the basin shall be regraded to its original dimensions. The removed sediment shall be stockpiled or redistributed in areas which are protected from erosion.

(6) The basin outlet structure and emergency spillway (if present) should be checked frequently and after each major rain event to check for damage.

H. STABILIZED CONSTRUCTION EXIT

(1) Stone size – 3 to 5 inches crushed rock.

(2) Length – as effective, but not less than 50 feet, unless depth of lot is less than 150 feet from edge of pavement where length must only be 30 feet.

(3) Thickness – not less than 8 inches.

(4) Width – not less than full width of all points of ingress or egress.

(5) Washing – when necessary, wheels shall be cleaned to remove sediment prior to entrance onto public roadway. When washing is required, it shall be done on an area stabilized with crushed stone which drains into an approved trap or sediment basin. All sediment shall be prevented from entering any storm drain, ditch or watercourse using approved methods.

(6) Maintenance – the entrance shall be maintained in condition which will prevent tracking or flowing of sediment onto public roadways. This may require periodic top dressing with additional stone as conditions demand, and repair and/or cleanout of any measures used to trap sediment. All sediment spilled, dropped, washed or tracked onto public roadway, must be removed immediately.

(7) Drainage – entrance must be properly graded or incorporate a drainage swale to prevent runoff from leaving the construction site.

G. ADDITIONAL NOTES:

(1) Upon completion of construction all disturbed areas shall be revegetated to 70% of existing conditions in accordance with the SWPPP and TPDES requirements.

(2) This project will not use any off-site material, waste/borrow/fill, or equipment storage areas.

(3) This site is not located adjacent to any surface waters.

(4) This site will not have any locations where storm water discharges directly to a surface water body.

LEGEND

- SF — SILT FENCE
- 820 — EXISTING CONTOURS
- 820 — PROPOSED CONTOURS
- FLOW ARROW
- ROCK BERM
- INLET PROTECTION

60 30 0 60 120

SCALE: 1 IN = 60 FT

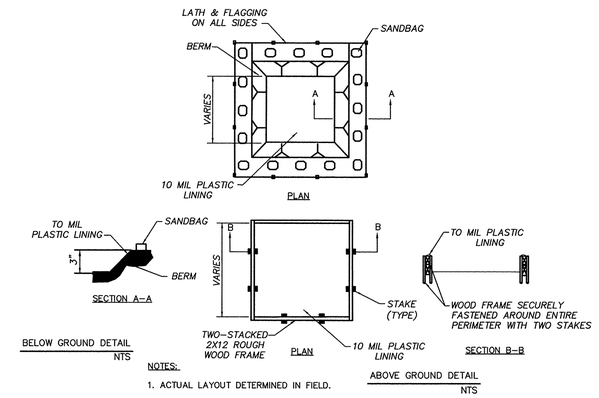

NOTES:

1. ACTUAL LAYOUT DETERMINED IN FIELD.

4 CONCRETE WASHOUT AREA

GENERAL NOTES:

1. POSTS TO BE SET AT 3–FOOT MAXIMUM SPACING. IF FACTORY PREASSEMBLE FENCE WITH SUPPORT NETTING IS USED. SPACING OF POST MAY BE INCREASED TO 8 FEET MAXIMUM.
2. WHEN TWO SECTIONS OF FILTER CLOTH ADJOIN EACH OTHER THEY SHOULD BE OVERLAPPED 6 INCHES AT THE POSTS, AND FOLDED.

1 SILT FENCE
N.T.S.

2 STABILIZED CONSTRUCTION EXIT
N.T.S.

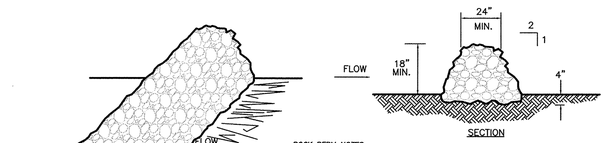

ROCK BERM NOTES:

1. USE ONLY OPEN GRADED ROCK 100 to 200 mm (4 to 8") DIAMETER FOR STREAM FLOW CONDITIONS. USE OPEN GRADED ROCK 75 to 125 mm (3 to 5") DIAMETER FOR OTHER CONDITIONS.
2. THE ROCK BERM SHALL BE SECURED WITH A WOVEN WIRE SHEATHING HAVING MAXIMUM 25 mm (1") OPENING AND MINIMUM WIRE DIAMETER OF 12.9 mm (20 GAUGE). ROCK BERMS IN CHANNEL APPLICATIONS SHALL BE ANCHORED FIRMLY INTO THE SUBSTRATE A MINIMUM OF 150 mm (6") WITH T–POSTS OR WITH 15M OR 20M (#5 OR #6) REBAR, WITH MAXIMUM SPACING APART OF 1.2 m (48") ON CENTER.
3. THE ROCK BERM SHALL BE INSPECTED WEEKLY OR AFTER EACH RAIN, AND THE STONE AND/OR FABRIC CORE–WOVEN SHEATHING SHALL BE REPLACED WHEN THE STRUCTURE CEASES TO FUNCTION AS INTENDED, DUE TO SILT ACCUMULATION AMONG THE ROCKS, WASHOUT, CONSTRUCTION TRAFFIC DAMAGE, ETC.
4. WHEN SILT REACHES A DEPTH EQUAL TO ONE–THIRD THE HEIGHT OF THE BERM OR 150 mm (6"), WHICHEVER IS LESS, THE SILT SHALL BE REMOVED AND DISPOSED OF ON AN APPROVED SITE AND IN A MANNER THAT WILL NOT CREATE A SILTATION PROBLEM.
5. DAILY INSPECTION SHALL BE MADE ON SEVERE–SERVICE ROCK BERMS; SILT SHALL BE REMOVED WHEN ACCUMULATION REACHES 150 mm (6").
6. WHEN THE SITE IS COMPLETELY STABILIZED, THE BERM AND ACCUMULATED SILT SHALL BE REMOVED AND DISPOSED OF IN AN APPROVED MANNER.

3 ROCK FILTER DAM
NTS

No.	Revision	By	App.	Date
	ISSUE FOR BID			01-25-13

ISSUE FOR BID

SAN ANTONIO AIRPORT SYSTEM

AECOM
TEXAS REGISTERED ENGINEERING FIRM F-3082
5757 Woodway Drive
Suite 101 West
Houston, Texas 77057
Tel: 713.267.3200
Fax: 713.267.3278

VICKREY & ASSOCIATES, INC.
CONSULTING ENGINEERS
12940 Country Parkway San Antonio, Texas 78216
Telephone: (210) 349–3271
Firm Registration No.: F–159

STATE OF TEXAS
GEOFFREY TY TURNER
90333
LICENSED PROFESSIONAL ENGINEER
7-20-2012

Designed By:	TT
Drawn By:	ML/JH
Checked By:	TT
Date:	12-10-2012
Scale:	AS SHOWN

SAN ANTONIO INTERNATIONAL AIRPORT
SOUTH PERIMETER ROAD REBID

STORM WATER POLLUTION PREVENTION PLAN

Project No.	33-00160	C.I.P. No.	0000	Sheet	C-708
		A.I.P. No.	3-48-0192-069-2011		

LAST MODIFIED: Jul 17, 2012 – 3:03pm BY USER: MLinton
DWG. LOCATION: R:\1241-035\dwg\
DWG. NAME: sh_swp3c.dwg

TABLE OF DIMENSIONS & REINFORCING STEEL (Wings for One Structure End)

Maximum Wingwall Height Hw	W	X	Y	Z	Bars J1 Size	Bars J1 Spa	Bars J2 Size	Bars J2 Spa	Estimated Quantities (3) per ft of wing length (2~Wings) Reinf (Lb/Ft)	Conc (CY/Ft)
2'-6"	2'-5"	1'-0"	9"	7"	#4	1'-0"	#4	1'-0"	33.73	0.248
3'-0"	2'-5"	1'-0"	9"	7"	#4	1'-0"	#4	1'-0"	37.07	0.261
3'-6"	2'-5"	1'-0"	9"	7"	#4	1'-0"	#4	1'-0"	37.74	0.273
4'-0"	2'-5"	1'-0"	9"	7"	#4	1'-0"	#4	1'-0"	38.41	0.285
4'-6"	3'-2"	1'-6"	1'-0"	7"	#4	1'-0"	#4	1'-0"	41.75	0.330
5'-0"	3'-2"	1'-6"	1'-0"	7"	#4	1'-0"	#4	1'-0"	45.09	0.343
5'-6"	3'-2"	1'-6"	1'-0"	7"	#4	1'-0"	#4	1'-0"	45.75	0.355
6'-0"	3'-2"	1'-6"	1'-0"	7"	#4	1'-0"	#4	1'-0"	46.42	0.367
7'-0"	3'-8"	1'-9"	1'-3"	7"	#4	1'-0"	#4	1'-0"	52.77	0.414
8'-0"	4'-2"	2'-0"	1'-6"	8"	#5	1'-0"	#4	1'-0"	60.19	0.486
9'-0"	4'-8"	2'-3"	1'-9"	8"	#4	6"	#4	6"	81.49	0.535
10'-0"	5'-2"	2'-6"	2'-0"	8"	#5	6"	#4	6"	97.25	0.584
11'-0"	5'-8"	2'-9"	2'-3"	8"	#6	6"	#5	6"	133.65	0.634
12'-0"	6'-2"	3'-0"	2'-6"	9"	#7	6"	#5	6"	162.29	0.721
13'-0"	6'-8"	3'-3"	2'-9"	11"	#7	6"	#5	6"	178.80	0.856
14'-0"	7'-2"	3'-6"	3'-0"	1'-0"	#8	6"	#5	6"	216.78	0.959
15'-0"	7'-8"	4'-0"	3'-0"	1'-1"	#9	6"	#6	6"	283.06	1.068
16'-0"	8'-2"	4'-6"	3'-0"	1'-3"	#9	6"	#6	6"	297.02	1.234

TABLE OF WINGWALL REINFORCING (2~Wings)

Bar	Size	No.	Spa
D	#5	~	1'-0"
E	#4	~	1'-0"
F	#4	~	1'-0"
G	#6	4	~
M	#4	4	~
P	#4	~	1'-0"
R	#5	6	~
V	#4	~	1'-0"

TABLE OF ESTIMATED CULVERT TOEWALL QUANTITIES

Bar	Size	No.	Spa
L	#4	~	1'-6"
Q	#4	1	~
Reinf (Lb/Ft)			2.45
Conc (CY/Ft)			0.037

WING DIMENSION CALCULATIONS:

Formulas: (All values are in Feet)
Hw = H + T + C - 0.250'
A = (Hw - 0.333') (SL)
B = (A) Tangent (30°)
Lw = (A) ÷ Cosine (30°)
For Cast-in-place culverts:
Ltw = (N) (S) + (N + 1) (U)
For Precast culverts:
Ltw = (N) (2U + S) + (N - 1) (0.500')
Total Wingwall Area (Two Wings - S.F.) = (Hw + 0.333') (Lw)

Hw = Height of Wingwall
SL:1 = Side Slope Ratio (Horizontal:1 Vertical)
Lw = Length of Wingwall
Ltw = Culvert Toewall Length
N = Number of Culvert Spans

See applicable box culvert standard for H, S, T, and U values.

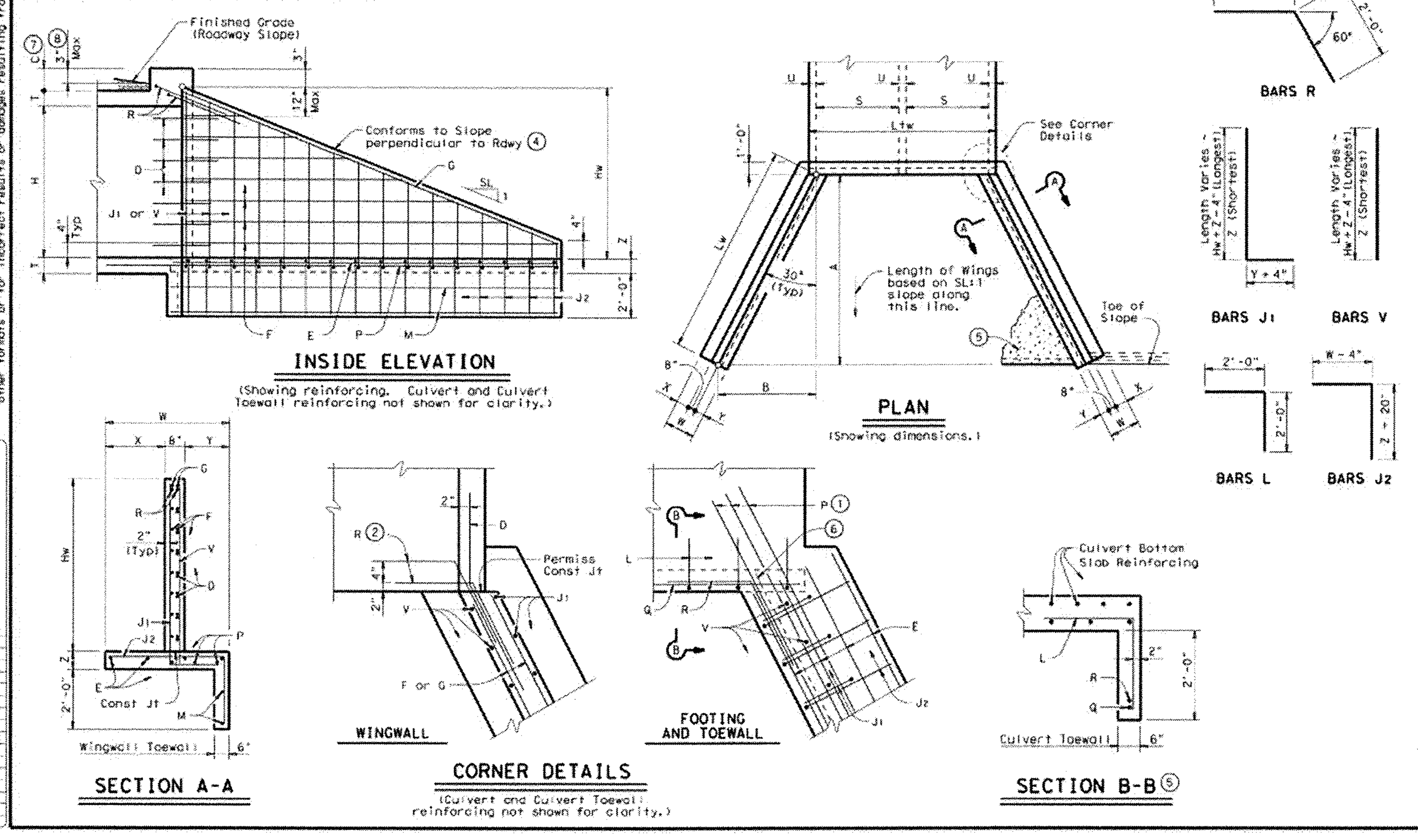

(1) Extend Bars P 3'-0" minimum into bottom slab of Box Culvert.

(2) Adjust to fit as necessary to maintain 1 ¼" clear cover and 4" minimum between bars.

(3) Quantities shown are based on an average wing height for two wings (one structure end). To determine total quantities for two wings multiply the tabulated values by Lw.

(4) Recommended values of Slope are: 2:1, 3:1, 4:1, & 6:1.

(5) When shown elsewhere on the plans, a 5" deep concrete riprap shall be constructed. Payment for riprap shall be as required by Item 432, "Riprap". Unless otherwise shown on the plans or directed by the Engineer, the riprap shall have a 6" wide by 1'-6" deep reinforced concrete toewall along all edges adjacent to natural ground; the toewall shall be reinforced by extending typical riprap reinforcing into the toewall; construction joints or grooved joints, oriented in the direction of flow, shall extend across the full distance of the riprap, at intervals of approximately 20'. When such riprap is provided, the culvert toewall shown in SECTION B-B will not be required.

(6) At Contractor's option, Culvert Toewall may be ended flush with Wingwall Toewall. Adjust reinforcing from that shown as necessary.

(7) 0" min to 5'-0" max. Estimated curb heights are shown elsewhere in the plans. For structures with pedestrian rail, bicycle rail or curbs taller than 1'-0", refer to ECD standard. For structures with T6 bridge rail, refer to T6-CM standard. For structures with traffic rail, other than T6, refer to RAC standard.

(8) For vehicle safety, curb heights and wall heights shall be reduced, if necessary, to provide a maximum 3" projection above finished grade. No changes will be made in quantities and no additional compensation will be allowed for this work.

GENERAL NOTES:
Designed according to AASHTO LRFD Specifications.
All reinforcing steel shall be Grade 60.
Synthetic fibers listed on the "Fibers for Concrete" Material Producer List (MPL) may be used in lieu of steel reinforcing in riprap concrete unless noted otherwise.
All concrete shall be Class "C" and shall have a minimum compressive strength of 3600 psi.
All reinforcing bars shall be adjusted to provide a minimum of 1 ¼" clear cover.
When structure is founded on solid rock, depth of toewalls for culverts and wingwalls may be reduced or eliminated as directed by the Engineer.
See BCS sheet for additional dimensions and information.
The quantities for concrete and reinforcing steel resulting from the formulas given on this sheet are for Contractor's information only.

Texas Department of Transportation
Bridge Division

CONCRETE WINGWALLS WITH FLARED WINGS FOR 0° SKEW BOX CULVERTS

FW-0

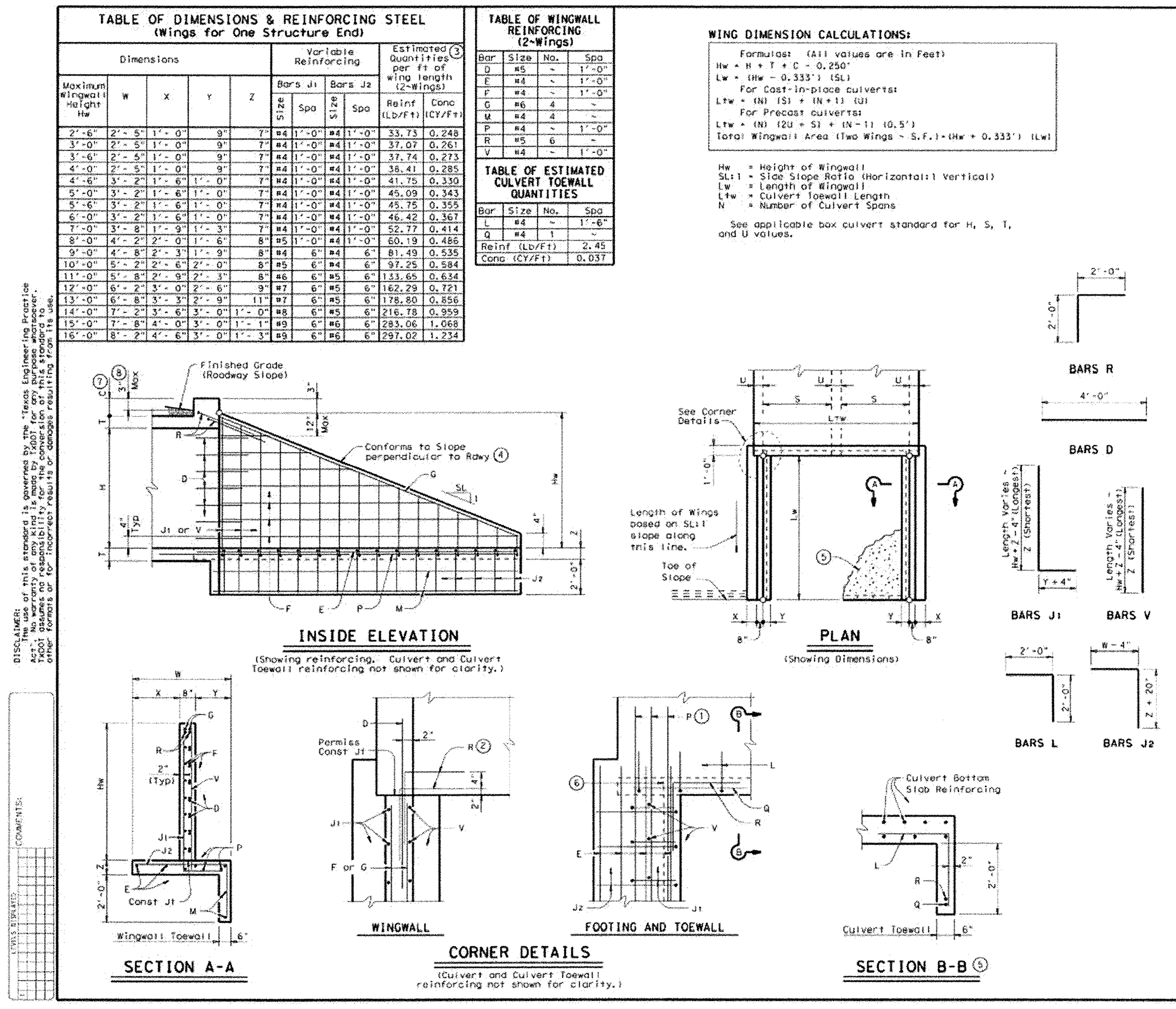

Texas Department of Transportation
Bridge Division

CONCRETE WINGWALLS WITH STRAIGHT WINGS FOR 0° SKEW BOX CULVERTS

SW-0

BOX DATA

S (ft)	H (ft)	T_T (in)	T_B (in)	T_S (in)	Fill Height (ft)	M (Min) (in)	A_{S1}	A_{S2}	A_{S3}	A_{S4}	A_{S5}	A_{S6}	A_{S7}	A_{S8}	Lift Weight (Tons) (1)
3	2	7	6	4	<2	-	0.17	0.25	0.16	0.10	0.17	0.17	0.17	0.14	3.3
3	2	4	4	4	2<3	31	0.13	0.19	0.18	0.10	-	-	-	-	2.4
3	2	4	4	4	3-5	31	0.10	0.11	0.12	0.10	-	-	-	-	2.4
3	2	4	4	4	10	31	0.10	0.10	0.10	0.10	-	-	-	-	2.4
3	2	4	4	4	15	31	0.10	0.13	0.13	0.10	-	-	-	-	2.4
3	2	4	4	4	20	31	0.11	0.17	0.17	0.10	-	-	-	-	2.4
3	2	4	4	4	25	31	0.14	0.21	0.21	0.10	-	-	-	-	2.4
3	2	4	4	4	30	31	0.17	0.25	0.25	0.10	-	-	-	-	2.4
3	2	4	4	4	35	31	0.20	0.29	0.30	0.10	-	-	-	-	2.4
3	3	7	6	4	<2	-	0.17	0.27	0.17	0.10	0.17	0.17	0.17	0.14	3.7
3	3	4	4	4	2<3	31	0.10	0.22	0.21	0.10	-	-	-	-	2.8
3	3	4	4	4	3-5	31	0.10	0.14	0.14	0.10	-	-	-	-	2.8
3	3	4	4	4	10	31	0.10	0.11	0.11	0.10	-	-	-	-	2.8
3	3	4	4	4	15	31	0.10	0.14	0.15	0.10	-	-	-	-	2.8
3	3	4	4	4	20	31	0.10	0.18	0.19	0.10	-	-	-	-	2.8
3	3	4	4	4	25	31	0.10	0.23	0.23	0.10	-	-	-	-	2.8
3	3	4	4	4	30	31	0.12	0.27	0.28	0.10	-	-	-	-	2.8
3	3	4	4	4	35	31	0.14	0.32	0.32	0.10	-	-	-	-	2.8

(Section dimensions: S, H, T_T, T_B, T_S; Reinforcing (in^2/ft) (2))

(1) For Box Length = 8'-0"

(2) A_{S1} thru A_{S4}, A_{S7} and A_{S8} are minimum required areas of reinforcement per linear foot of box length. A_{S5} and A_{S6} are minimum required areas of reinforcement per linear foot of box width.

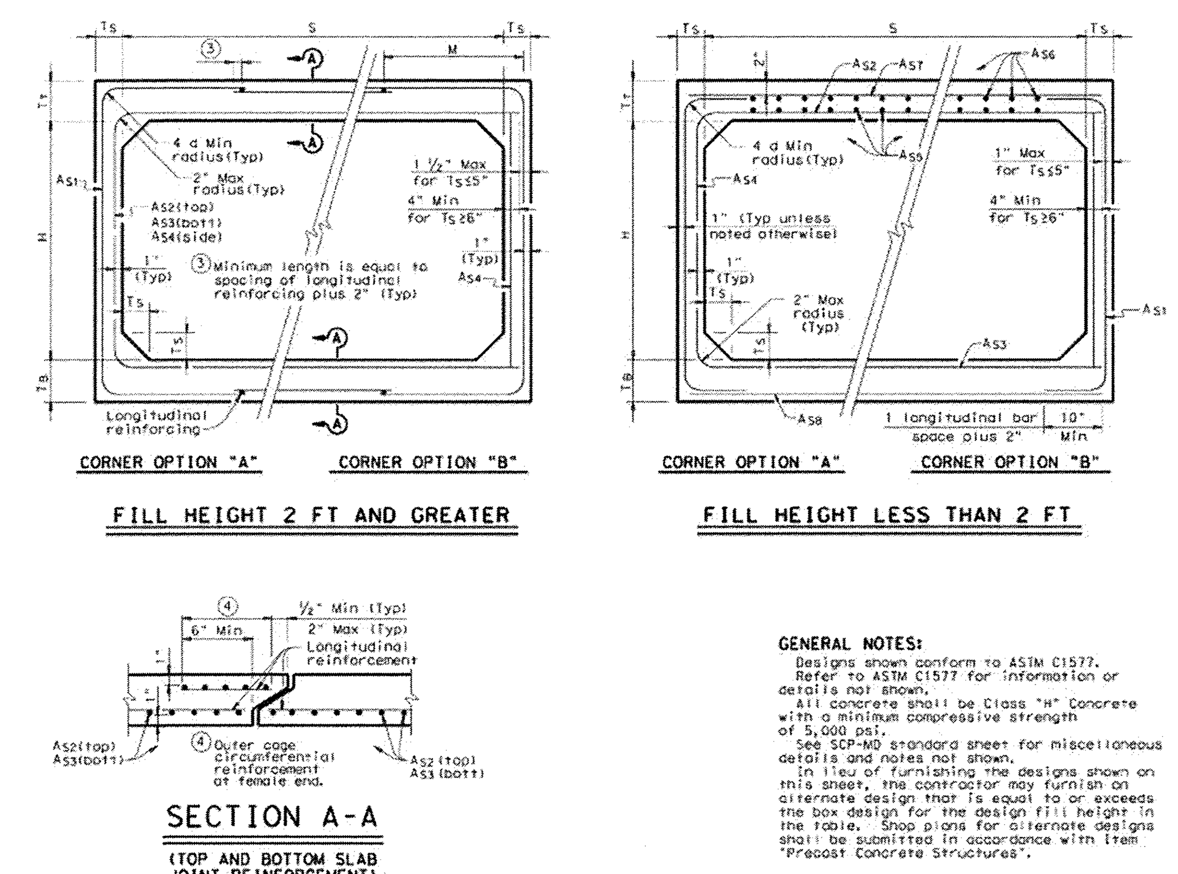

GENERAL NOTES:
Designs shown conform to ASTM C1577.
Refer to ASTM C1577 for information or details not shown.
All concrete shall be Class "H" Concrete with a minimum compressive strength of 5,000 psi.
See SCP-MD standard sheet for miscellaneous details and notes not shown.
In lieu of furnishing the designs shown on this sheet, the contractor may furnish an alternate design that is equal to or exceeds the box design for the design fill height in the table. Shop plans for alternate designs shall be submitted in accordance with Item "Precast Concrete Structures".

HL93 LOADING

Texas Department of Transportation
Bridge Division

SINGLE BOX CULVERTS PRECAST 3'-0" SPAN

SCP-3

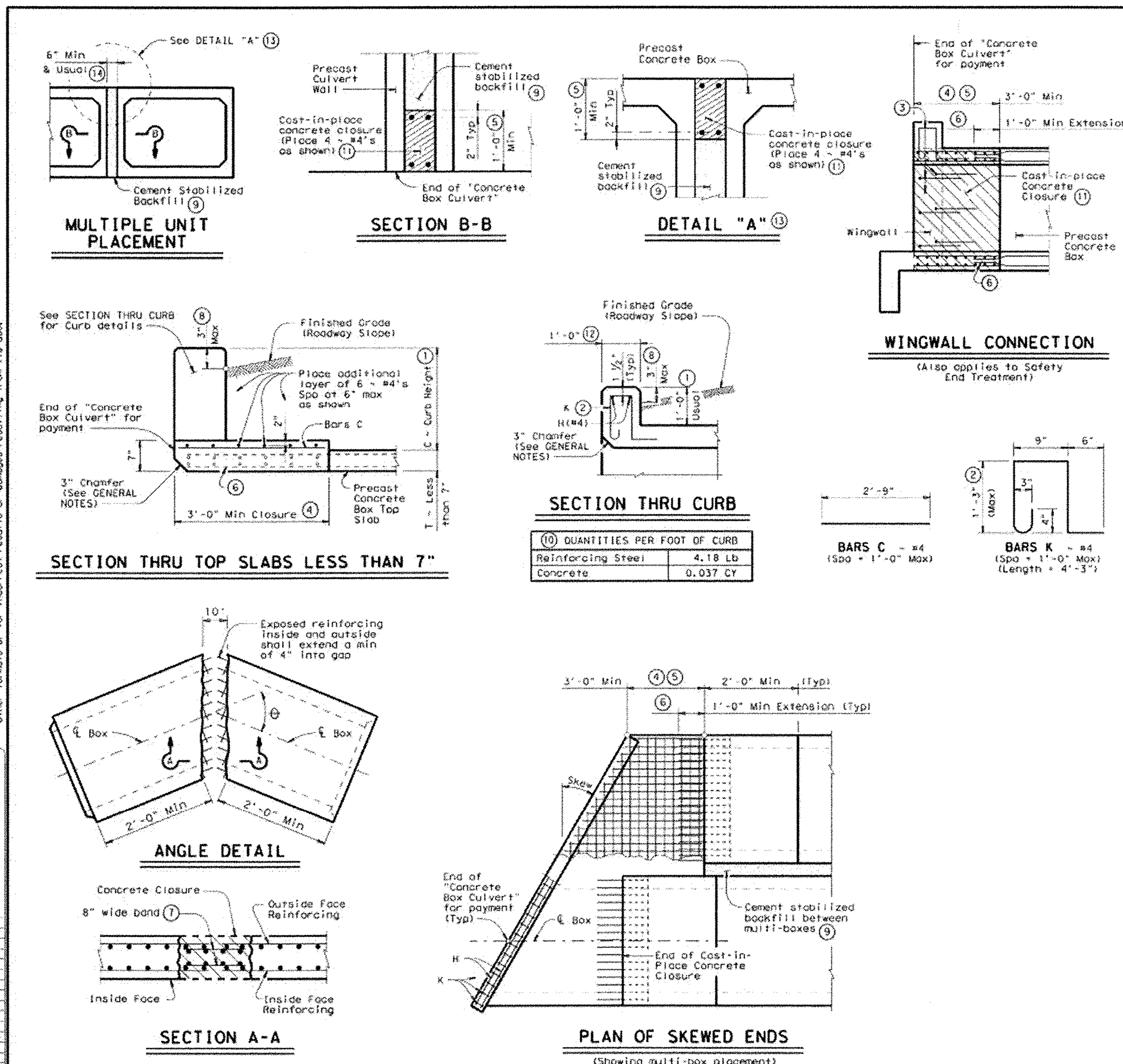

(1) 0" min to 5'-0" max. Estimated curb heights are shown elsewhere in the plans. For structures with pedestrian rail, bicycle rail or curbs taller than 1'-0", refer to ECD standard. For structures with T6 traffic rail, refer to T6-CM standard. For structures with traffic rail, other than T6, refer to RAC standard.

(2) For curbs less than 1'-0" high, tilt Bars K or reduce bar height as necessary to maintain cover. For curbs less than 3" high, Bars K may be omitted.

(3) Curb, Wingwall or Safety End Treatment reinforcing shall extend into concrete closure. Any reinforcing that does not fit into the closure shall be bent or trimmed as necessary.

(4) Cast-in-place concrete closure shall be 3'-0" min. Boxes shall be cast short or broken back in the field. All reinforcing in the closure shall be the same size and spacing as in the precast box section. Except where shown otherwise, the cast-in-place closure shall be flush with the inside and outside faces of the precast box section.

(5) For multiple unit placements the length of the closure for the interior walls may be adjusted as necessary. The length of the top slab, bottom slab, and exterior wall closure shall not be less than 3'-0". See Section B-B detail when interior walls are cast full length.

(6) Precast box reinforcing shall extend a minimum of 1'-0" into concrete closure (Typ).

(7) Bands of reinforcing matching the inside and outside face reinforcing shall be placed in the gaps of the top and bottom slabs. A band matching the outside face reinforcing of the wall shall be placed in the gaps of the walls (placed in the outside face only). The bands shall be tack welded to the exposed reinforcing at each point of contact.

(8) For vehicle safety, the following requirements must be met:
- For structures without bridge rail, curbs shall project no more than 3" above finished grade.
- For structures with bridge rail, curbs shall be flush with finished grade.
Curb heights shall be reduced, if necessary, to meet the above requirements. No changes will be made in quantities and no additional compensation will be allowed for this work.

(9) Cement Stabilized Backfill between boxes is considered part of the Box Culvert for payment.

(10) All curb concrete and reinforcing is considered part of the Box Culvert for payment.

(11) Any additional concrete and reinforcing required for the closures shall be considered as subsidiary to the Concrete Box Culvert.

(12) 1'-0" typical. 2'-0" when RAC standard is referred to elsewhere in the plans.

(13) For multiple unit placement with overlay, with 1 to 2 course surface treatment, or with the top slab as the final riding surface, provide wall closure as shown in DETAIL "A".

(14) This dimension may be increased with approval of the Engineer to allow the precast boxes to be tunneled or jacked in accordance with Item 476, "Jacking, Boring, or Tunneling Pipe or Box". No payment will be made for any additional material in the gap between adjacent boxes.

GENERAL NOTES:
Designed according to AASHTO LRFD Specifications.
All closure concrete shall be Class "C" with a minimum compressive strength of 3600 psi and shall be placed according to the Item, "Concrete Structures".
Any additional concrete required for the closures shall be considered as subsidiary to the Concrete Box Culvert.
Refer to the Single Box Culverts Precast standard for details not shown.
The bottom edge of the top slab closure shall be chamfered 3 inches at the entrance.

HL93 LOADING

Texas Department of Transportation
Bridge Division

BOX CULVERTS PRECAST MISCELLANEOUS DETAILS

SCP-MD

No.	Revision	By	App.	Date
	ISSUE FOR BID			01-25-13

SAN ANTONIO AIRPORT SYSTEM

ISSUE FOR BID

AECOM
TEXAS REGISTERED ENGINEERING FIRM F-3082
5757 Woodway Drive
Suite 101 West
Houston, Texas 77057
Tel: 713.267.3200
Fax: 713.267.3278

VICKREY & ASSOCIATES, INC.
CONSULTING ENGINEERS
12940 Country Parkway San Antonio, Texas 78216
Telephone: (210) 349-3271
Firm Registration No.: F-159

STATE OF TEXAS — GEOFFREY TURNER — 90333 — LICENSED PROFESSIONAL ENGINEER — 7-20-2012

Designed By: TT
Drawn By: ML/JH
Checked By: TT
Date: 12-10-2012
Scale: AS SHOWN

SAN ANTONIO INTERNATIONAL AIRPORT
SOUTH PERIMETER ROAD REBID

TxDOT CULVERT DETAILS

Project No. 33-00160 | C.I.P. No. 0000 | A.I.P. No. 3-48-0192-069-2011 | Sheet C-709

LAST MODIFIED: Jul 17, 2012 - 3:03pm BY USER: MLinton
DWG. LOCATION: R:\1241-036\dwg\
DWG. NAME: sn_txdot standards.dwg

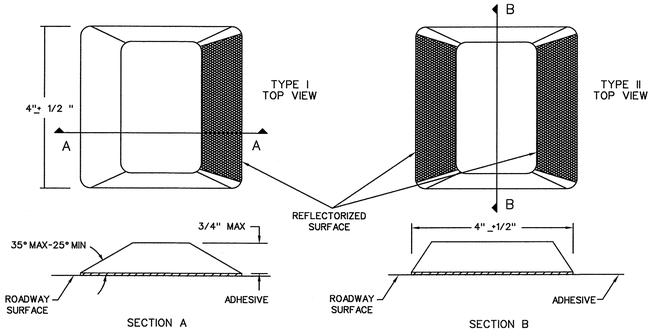

RAISED PAVEMENT MARKERS
(REFLECTORIZED)

NOTES:

1. PAVEMENT SURFACE SHALL BE PREPARED AND CLEANED SUBJECT TO APPROVAL OF THE CITY TRAFFIC ENGINEER BEFORE ADHESIVE AND RPMs ARE PLACED.
2. MARKERS SHOWN ARE FOR ILLUSTRATION PURPOSES ONLY AND NOT INTENDED TO SPECIFY ANY PARTICULAR PRODUCT. ALL PAVEMENT MARKERS PROVIDED SHALL BE OF THE SAME MANUFACTURER.
3. ALL DIMENSIONS ARE +/- 1/8" UNLESS OTHERWISE NOTED.
4. ALL PAVEMENT MARKING MATERIALS SHALL MEET MATERIAL SPECIFICATIONS AS SPECIFIED BY CITY OF SAN ANTONIO STANDARD SPECIFICATIONS.
5. ON CONCRETE PAVEMENTS THE RAISED PAVEMENT MARKERS SHOULD BE PLACED TO ONE SIDE OF THE LONGITUDINAL JOINTS.

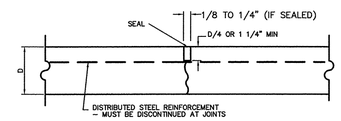

1 TRANSVERSE JOINT DETAIL
NTS

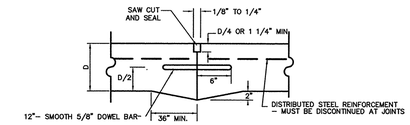

2 PAVEMENT CHANGE AND CONSTRUCTION JOINT DETAIL
NTS

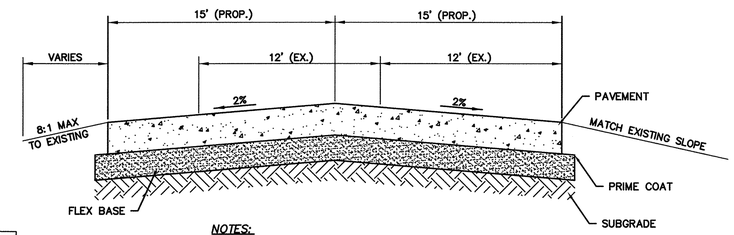

NOTES:

1. CONTRACTOR TO REFER TO GEOTECHNICAL ENGINEERING STUDY BY HVJ ASSOCIATES, INC. DATED JUNE 10, 2012, FOR PAVEMENT DESIGN SPECIFICATIONS. SEE ALSO TABLE BELOW.
2. JOINTS SHALL BE PER CITY OF SAN ANTONIO STANDARDS FOR CONCRETE PAVEMENT CONSTRUCTION.
3. CONTRACTOR TO PLACE PRIME COAT OVER BASE PRIOR TO CONSTRUCTING CONCRETE PAVEMENT.

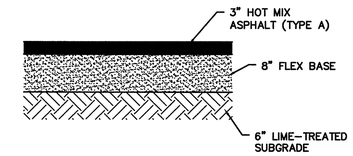

NOTE:

CONTRACTOR TO REFER TO GEOTECHNICAL ENGINEERING STUDY FOR PAVEMENT DESIGN SPECIFICATIONS.

4 TEMPORARY ROADWAY SECTION
NTS

ROADWAY SECTION TABLE (AS PER HVJ ASSOCIATES,INC.)	
PAVEMENT SECTION	10" JOINTED REINFORCED CONCRETE PAVEMENT
CONCRETE REINFORCEMENT	#4 BARS @ 12" SPACING O.C.E.W. OR D10 x D10 6"x6" WWF
BASE	4" HMA TYPE B BASE
SUBGRADE	8" LIME-STABILIZED

3 TYPICAL CROSS-SECTION PERIMETER ROAD
NTS

TABLE OF DIMENSIONS & REINFORCING STEEL (Wings for One Structure End)

Dimensions: Maximum Wingwall Height Hw (9)	W	X	Y	Z	Variable Reinforcing: Bars J1 Size	Bars J1 Spa	Bars J2 Size	Bars J2 Spa	Estimated (3) Quantities per ft of wing length (2-Wings): Reinf (LB/FT)	Conc (CY/FT)
2'-6"	2'- 5"	1'- 0"	9"	7"	#4	1'-0"	#4	1'-0"	33.73	0.248
3'-0"	2'- 5"	1'- 0"	9"	7"	#4	1'-0"	#4	1'-0"	37.07	0.261
3'-6"	2'- 5"	1'- 0"	9"	7"	#4	1'-0"	#4	1'-0"	37.74	0.273
4'-0"	2'- 5"	1'- 0"	9"	7"	#4	1'-0"	#4	1'-0"	38.41	0.285
4'-6"	3'- 2"	1'- 6"	1'- 0"	7"	#4	1'-0"	#4	1'-0"	41.75	0.330
5'-0"	3'- 2"	1'- 6"	1'- 0"	7"	#4	1'-0"	#4	1'-0"	45.09	0.343
5'-6"	3'- 2"	1'- 6"	1'- 0"	7"	#4	1'-0"	#4	1'-0"	45.75	0.355
6'-0"	3'- 2"	1'- 6"	1'- 0"	7"	#4	1'-0"	#4	1'-0"	46.42	0.367
7'-0"	3'- 8"	1'- 9"	1'- 3"	7"	#4	1'-0"	#4	1'-0"	52.77	0.414
8'-0"	4'- 2"	2'- 0"	1'- 6"	8"	#5	1'-0"	#4	1'-0"	60.19	0.486
9'-0"	4'- 8"	2'- 3"	1'- 9"	8"	#4	6"	#4	6"	81.49	0.535
10'-0"	5'- 2"	2'- 6"	2'- 0"	8"	#5	6"	#4	6"	97.25	0.584
11'-0"	5'- 8"	2'- 9"	2'- 3"	8"	#6	6"	#5	6"	133.65	0.634
12'-0"	6'- 2"	3'- 0"	2'- 6"	9"	#7	6"	#5	6"	162.29	0.721

TABLE OF WINGWALL REINFORCING (2-Wings)

Bar	Size	No.	Spa
D	#5	~	1'-0"
E	#4	~	1'-0"
F	#4	~	1'-0"
G	#6	4	~
M	#4	4	~
P	#4	~	1'-0"
R	#5	6	~
V	#4	~	1'-0"

TABLE OF ESTIMATED CULVERT TOEWALL QUANTITIES

Bar	Size	No.	Spa
L	#4	~	1'-6"
Q	#4	1	~
Reinf (LB/FT)			2.45
Conc (CY/FT)			0.037

TABLE OF ESTIMATED ANCHOR TOEWALL QUANTITIES

Bar	Size	No.	Spa
K	#4	~	1'-0"
N	#5	6	~
OL	#4	6	~
Reinf (LB/FT)			9.82
Conc (CY/FT)			0.074

1. Extend Bars P 3'-0" minimum into bottom slab of Box Culvert.
2. Adjust to fit as necessary to maintain 1 1/4" clear cover and 4" minimum between bars.
3. Quantities shown are based on an average wing height for two wings (one structure end). To determine total quantities for two wings multiply the tabulated values by Lw.
4. Recommended values of Slope are: 3:1, 4:1, & 6:1. Slope shall be 3:1 or flatter.
5. When shown elsewhere on the plans, a 5" deep concrete riprap shall be constructed. Payment for riprap shall be as required by Item 432, "Riprap". Unless otherwise shown on the plans or directed by the Engineer, construction joints or grooved joints, oriented in the direction of flow, and shall extend across the full distance of the riprap, at intervals of approximately 20'. When such riprap is provided, the culvert toewall shown in SECTION B-B will not be required.
6. At Contractor's option, Culvert Toewall may be ended flush with Wingwall Toewall. Adjust reinforcing from that shown as necessary.
7. 3" min to 5'-0" max. Estimated curb heights are shown elsewhere in the plans. For structures without railing and curbs taller than 1'-0", refer to ECD standard.
8. For vehicle safety, curbs shall project no more than 3" above finished grade. Curb heights shall be reduced, if necessary, to meet these requirements. No changes will be made in quantities and no additional compensation will be allowed for this work.
9. See "Table Of Maximum Wing Heights" for various slopes. Height is limited based on a 33'-6" maximum safety pipe runner length.

TABLE OF MAXIMUM (9) WING HEIGHTS (Hw max)

Side Slope	Hw max
3:1	11'- 5"
4:1	8'-10"
6:1	6'- 1"

WING DIMENSION CALCULATIONS:

Formulas: (All values are in Feet)
Hw = H + T + C - 0.250' (9)
Lw = (Hw - 0.333') (SL)

For Cast-in-place culverts:
Ltw = (N) (S) + (N+1) (U)
For Precast culverts:
Ltw = (N) (2U+S) + (N-1) (0.500')

LC = (Ltw) - (2U)
Atw = Lc
Total Wingwall Area (Two Wings - S.F.)
= (Hw + 0.333') (Lw)

Hw = Height of Wingwall
Sl:1 = Slope Slope Ratio (Horizontal : 1 Vertical)
Lw = Length of Wingwall
Ltw = Culvert Toewall Length
Lc = Culvert Curb between Wings
Atw = Anchor Toewall Length
N = Number of Culvert Spans

See applicable box culvert standard for H, S, T, and U values. See Table of Maximum Wall Heights for limits on Hw.

GENERAL NOTES:

Designed according to AASHTO LRFD Specifications.
The Safety End Treatments shown herein are intended for use in those installations where out of control vehicles are likely to traverse the openings approximately perpendicular to the Pipe Runners.
Pipe Runners are designed for a traversing load of 1,800 pounds at yield as recommended by Research Report 280-1, "Safety Treatment of Roadside Cross-Drainage Structures", Texas Transportation Institute, March 1981.
All reinforcing steel shall be Grade 60.
Synthetic fibers listed on the "Fibers for Concrete Material Producer List (MPL) may be used in lieu of steel reinforcing in riprap concrete unless noted otherwise.
All concrete shall be Class "C" and shall have a minimum compressive strength of 3600 psi.
All reinforcing bars shall be adjusted to provide a minimum of 1 1/2" clear cover.
When structure is founded on solid rock, depth of toewalls for culverts and wingwalls may be reduced or eliminated as directed by the Engineer.
See BCS sheet for additional dimensions and information.
All bolts, nuts, washers, brackets, angles, and pipe runners are considered parts of the Safety End Treatment for payment.
Pipe Runners shall conform to the requirements of ASTM A53 (Type E or S, Grade B), ASTM A500 (Grade B), or API 5LX52.
Bolts and nuts shall conform to ASTM A307. Steel plates shall conform to ASTM A36. All steel components, except reinforcing, shall be galvanized. Galvanizing damaged during transport or construction shall be repaired in accordance with the specifications.
The quantities for concrete and reinforcing steel resulting from the formulas given on this sheet are for Contractor's information only.

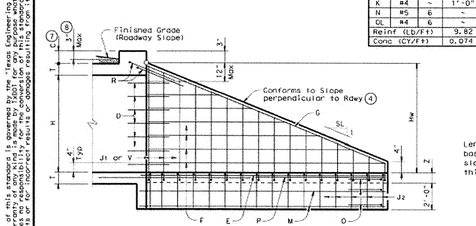

INSIDE ELEVATION OF WINGWALL
(Showing reinforcing. Culvert and Culvert Toewall reinforcing not shown for clarity.)

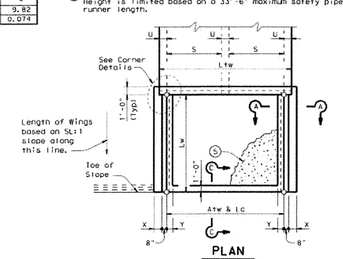

PLAN
(Showing Dimensions)

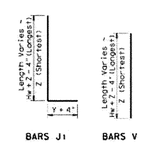

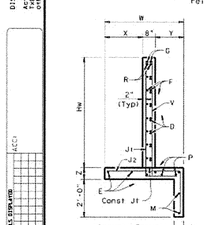

SECTION A-A

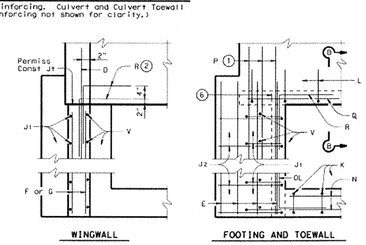

WINGWALL
FOOTING AND TOEWALL

CORNER DETAILS
(Culvert and Culvert Toewall reinforcing not shown for clarity.)

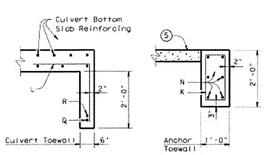

SECTION B-B (5)
SECTION C-C

SHEET 1 OF 3

Texas Department of Transportation
Bridge Division

SAFETY END TREATMENT WITH STRAIGHT WINGS

FOR 0° SKEW BOX CULVERTS
TYPE I ~ CROSS DRAINAGE

SETB-SW-0

F.N.: setb06a.cgn	DN: CAT	CK: CAT	DW: JRP	CK: CAT
© TxDOT February 2010	BRIDGE	FEDERAL AID PROJECT		SHEET
REVISIONS 11-10: Add note for synthetic fibers.	COUNTY		CONTROL SECT	JOB / HIGHWAY

DISCLAIMER:
The use of this standard is governed by the Texas Engineering Practice Act. No warranty of any kind is made by TxDOT for any purpose whatsoever. TxDOT shall not be liable for any damages resulting from the use of this standard for other purposes or for incorrect results or damages resulting from its use.

LEGEND
(ECD)
LEVEL EXPLORER

LAST MODIFIED: Jul 17, 2012 - 3:04pm BY: USER: MLBolton
DWG. LOCATION: R:\1241-036\dwg\
DWG. NAME: sh_pavement-set details.dwg

No.	Revision	By	App.	Date
	ISSUE FOR BID			01-25-13

ISSUE FOR BID

SAN ANTONIO AIRPORT SYSTEM

AECOM
TEXAS REGISTERED ENGINEERING FIRM F-3002
5757 Woodway Drive
Suite 101 West
Houston, Texas 77057
Tel: 713.267.3200
Fax: 713.267.3278

VICKREY & ASSOCIATES, INC.
CONSULTING ENGINEERS
12940 Country Parkway San Antonio, Texas 78216
Telephone: (210) 349-3271
Firm Registration No.: F-159

STATE OF TEXAS
GEOFFREY TY TURNER
90333
LICENSED PROFESSIONAL ENGINEER
7-20-2012

Designed By:	TT
Drawn By:	ML/JH
Checked By:	TT
Date:	12-10-2012
Scale:	AS SHOWN

SAN ANTONIO INTERNATIONAL AIRPORT
SOUTH PERIMETER ROAD REBID

PAVEMENT AND SAFETY END TREATMENT DETAILS

Project No. 33-00160 | C.I.P. No. 0000 | A.I.P. No. 3-48-0192-069-2011 | Sheet C-710

TRAFFIC NOTES

TRENCHING / EXCAVATING

The following notes shall apply to excavations of trenches or pits that are located in the pavement or are within six (6) feet of the edge of roadway:

1.) Trench walls shall not be closer than three (3) feet from the edge of the traveled way at any stage of construction.

2.) Traffic control devices shall be in place before starting any excavation.

3.) Trenches or pits will not be permitted to be bridged by steel plates and open to traffic unless they are temporarily backfilled to finished street grade.

4.) For pits or trenches along or in a roadway that are going to be left open over night that are zero to fifty (0 – 50) feet in length, the following applies. GUARD RAIL OR CONCRETE BARRIER SHALL BE USED.

5.) For pits or trenches along or in roadway that are going to be left open over night and are longer than 50 feet in length. CONCRETE BARRIERS MUST BE USED.

6.) Plastic construction fencing shall be required for any trench or pit left open over night.

7.) When using any guardrail or concrete barrier, protected end must be used as per the TEXAS–M.U.T.C.D.

8.) For vertical drop–offs greater than two (2) feet along roadway, low profile concrete with appropriate end protection must be installed.

9.) All concrete barriers placed on City R.O.W shall be low profile. No high profile barriers will be allowed.

REFLECTIVE SHEETING

The reflectorized white and reflectorized orange stripes for channelizing devices such as barricade drums and vertical panels shall be constructed of reflective sheeting meeting the color and retro–reflectivity requirements of high intensity, unless otherwise specified in the plans.

MAINTENANCE

1.) All traffic signs shall be kept in proper position, clean and legible at all times. Damaged barricades, signs, and other traffic control devices shall be replaced without undue delay.

2.) To ensure adequate maintenance, a suitable schedule for inspection, cleaning, and replacement of barricades, lights, and signs shall be established.

3.) Special attention and necessary action shall be taken to see that weeds, trees, shrubbery and construction materials do not obscure the face of any sign or barricades.

TRAINING

Each person whose actions affect maintenance and construction zone safety, from the upper–level management personnel through construction and maintenance field personnel, should receive training appropriate to the job decision each individual is required to make. Only those individuals who are qualified by means of adequate training in safe traffic control practices and have a basic understanding of the principles established by applicable standards and regulations, including those of the TEXAS M.U.T.C.D. should supervise the selection, placement, and maintenance of traffic control devices in maintenance and construction areas.

SPECIAL EVENTS BARRICADING

All Type I, (8') barricades used for special events (Dome, Runs, Walks, Parades etc.) shall be a minimum of 42" high and 96" wide. Any necessary signs will require proper sign stands.

USE OF CITY R.O.W.

The City of San Antonio reserves the right to allow contracting and barricading sub–contractors to use the City's R.O.W. The City also reserves the right to advise contractors and barricading sub–contractors to remove stored or unused traffic control devices from the City of San Antonio R.O.W. It is the barricading sub–contractor's responsibility to remove any traffic control device from City's R.O.W. when instructed to do so by a City representative.

CLOSURE DIAGRAMS

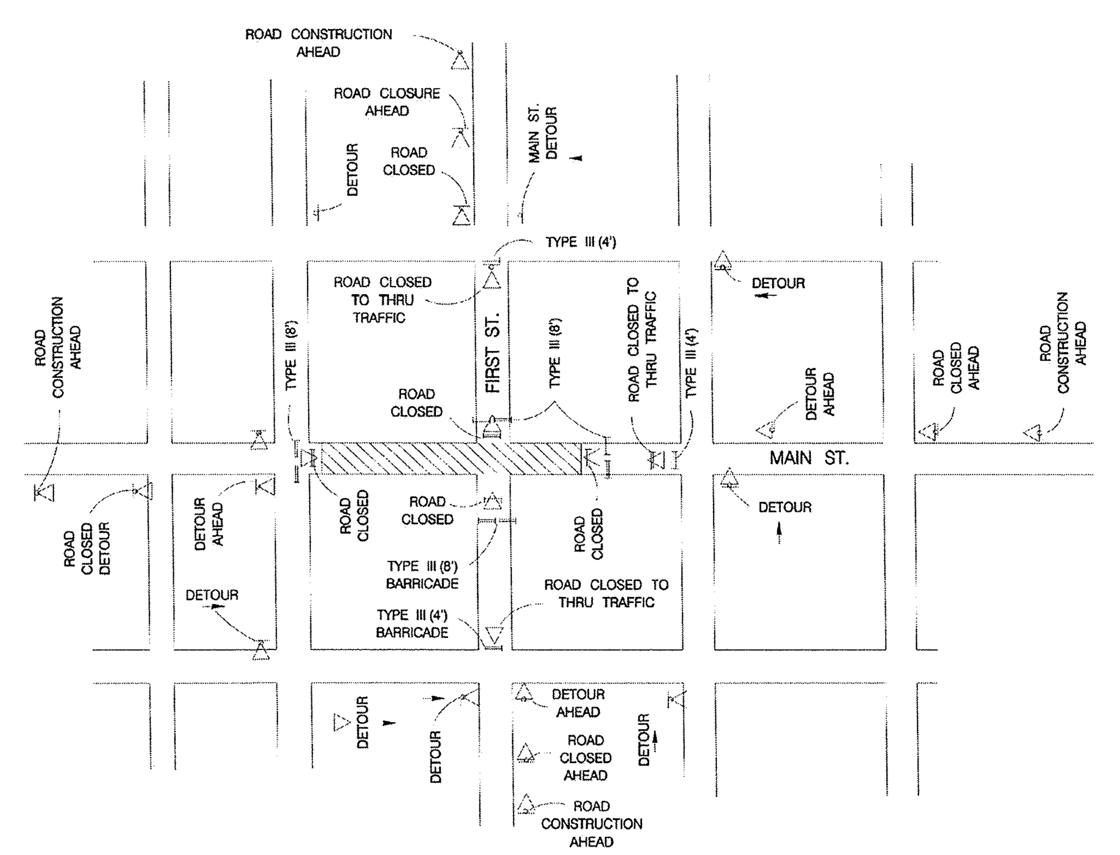

TYPICAL INTERSECTING STREET CLOSURE FOR TWO LANE STREETS

NOTE:
ALL SIGNS WILL BE MOUNTED ON SIGN SUPPORTS ONLY

JUNE 2005
CITY OF SAN ANTONIO
DEPARTMENT OF PUBLIC WORKS
TRAFFIC STANDARDS
BARRICADE AND CONSTRUCTION STANDARDS
SHEET 1 OF 4

THE ORIGINAL OF THIS DRAWING WAS SIGNED AND SEALED BY JOHN D. FRIEBELE, #46394 ON 06-20-05 AND IS ON FILE WITH THE TRAFFIC ENGINEERING DIVISION OF THE PUBLIC WORKS DEPARTMENT, CITY OF SAN ANTONIO.

___% SUBMITTAL | PROJECT NO.: ___ | DATE: ___
DRWN. BY: A.F.G. | DSGN. BY: E.N.M. | CHKD. BY: J.D.F./E.N.M. | SHEET NO.: ___ OF ___

TYPE I BARRICADE

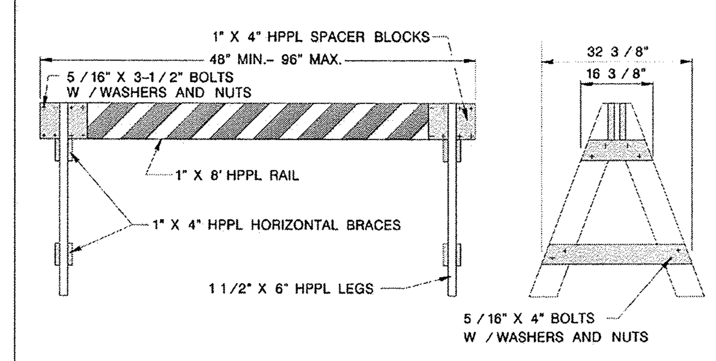

1.) Only the following Type I barricade shall be used in the City of San Antonio Right–Of–Way:
A. 1" x 8" plastic rail with 2" x 6" wooden legs.
B. 1" x 8" wooden rail with plastic legs.
C. 1" x 8" wooden rail with 2" x 6" wood legs.
D. No screws allowed for assembly of A–legs or rail.
E. Warning lights will be used as directed by the Traffic Engineer.
F. All Type I (4') barricades will be a minimum of 36" high and 60" wide. (For Construction Use Only)
G. All Type I (8') barricades with wooden legs shall be 2" X 6" wood only.
H. All Type I (4') barricades with wooden legs shall be 1" X 8" wood only.

2.) Type I Barricades shall not be used for partial and total street closures in construction work zones. Only Type III barricades shall be used for this purpose.

3.) Warning lights shall not be mounted on Type I barricades.

(See TxDOT BC–03 Sheets for specific construction information)

CONES

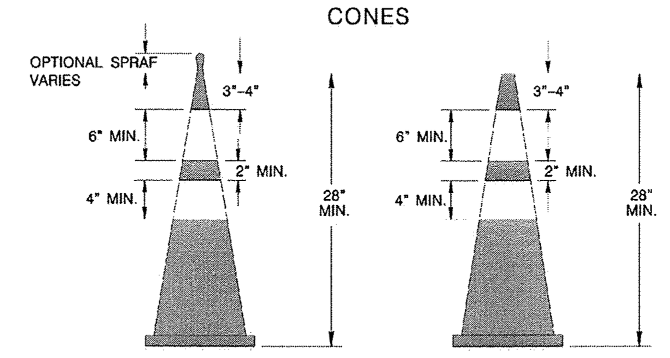

1.) Base for 28" high cones must weigh at least 9.5 lbs.

2.) Night time cones must have reflective collars.

(See TxDOT BC–03 Sheets for specific construction information)

Type III BARRICADE

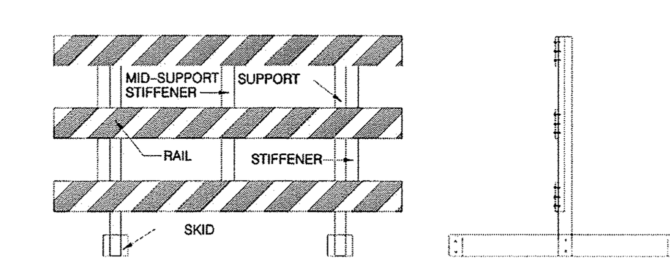

1.) Only the following Type III barricade shall be used in the City of San Antonio Right–Of–Way.
A. Hollow polyvinyl or fiberglass tubing post with 1" X 8" wooden rails.
B. Hollow polyvinyl or fiberglass tubing post with plastic rails.
C. Skids must be wood or solid plastic only.
D. Warning lights shall not be mounted on Type III barricades.

(See TxDOT BC–03 Sheets for specific construction information)

TEMPORARY MARKINGS

1.) Solid double yellow painted lines shall be installed for temporary division of traffic or construction duration longer than five (5) days, with repainting to occur once monthly or at the discretion of the Traffic Engineer. (All cost of upkeep will be at the contractor's expense.)

2.) Solid double yellow tabs, or VP panels shall be installed for temporary division of traffic for construction duration less than five (5) days, with re–tabbing to occur at the discretion of the Traffic Engineer.
NAILS SHALL NOT BE USED TO FIX TABS TO CEMENT OR BASE (All cost of upkeep will be at the contractor's expense.)

(See TxDOT BC–03 Sheets for specific construction information.)

TEMPORARY CONCRETE BARRIER

1.) All concrete barriers placed on City R.O.W. shall be low profile.

2.) No high profile barriers will be allowed.

3.) Reflectors will be required on each concrete barrier.

(See TxDOT BC–03 Sheets for specific construction information)

PLASTIC DRUMS

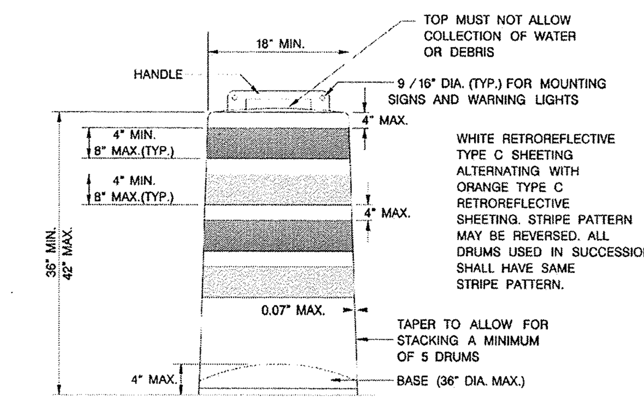

1.) Drums and all related items shall comply with the requirements of the current version of the "Texas Manual on Uniform Traffic Control Devices" (TMUTCD) and the "Compliant Work Zone Traffic Control Devices List" (CWZTCD).

2.) Drums, bases, and related materials shall exhibit good workmanship and shall be free from objectionable marks or defects that would adversely affect their appearance or serviceability.

3.) The Engineer/Inspector shall provide written notice to the Contractor regarding the replacement of drums or other traffic control devices. The Contractor shall have a maximum of 24 hours to replace any plastic drums or other traffic control devices identified for replacement by the Engineer/Inspector. The replacement device must be an approved device.

4.) Each drum must have a 40 lb. rubber or plastic snap on.

5.) No signs larger than 18" X 24" will be allowed to be mounted on plastic drums.

6.) No warning lights will be allowed to be mounted on plastic barrels.

7.) In lieu of a warning light, a yellow reflector will be acceptable.

(See TxDOT BC–03 Sheets for specific construction information)

JUNE 2005
CITY OF SAN ANTONIO
DEPARTMENT OF PUBLIC WORKS
TRAFFIC STANDARDS
BARRICADE AND CONSTRUCTION STANDARDS
SHEET 3 OF 4

THE ORIGINAL OF THIS DRAWING WAS SIGNED AND SEALED BY JOHN D. FRIEBELE, #46394 ON 06-20-05 AND IS ON FILE WITH THE TRAFFIC ENGINEERING DIVISION OF THE PUBLIC WORKS DEPARTMENT, CITY OF SAN ANTONIO.

___% SUBMITTAL | PROJECT NO.: ___ | DATE: ___
DRWN. BY: A.F.G. | DSGN. BY: E.N.M. | CHKD. BY: J.D.F./E.N.M. | SHEET NO.: ___ OF ___

SIGNS

1.) A maximum of two signs can be mounted on any one Long / Intermediate Term Stationary Portable Sign Support.

2.) 48" X 48" signs shall be mounted separately on the Long / Intermediate Term Stationary Portable Sign Support.

3.) For Short Term Stationary Portable Sign Support the distance from the bottom of the vinyl sign to the exiting ground must be one (1) foot.

4.) Long / Intermediate Term Stationary Portable Signs must be made of wood or plastic only.

5.) No signs shall be mounted to any Type I, Type III, or folding barricades.

6.) Signs shall be mounted only on TxDOT approved sign supports.

7.) Detour signs will be mounted on single "D" legs w / 7' clearance from the bottom of the sign.

8.) WORK DURATION TERMINOLOGY
Long Term Stationary = occupies a location 3 or more days.
Intermediate–Term Stationary = occupies a location for overnight to 3 days.
Short Term Stationary = daylight work that occupies a location from 1 to 12 hours.
Short Duration = occupies a location up to 1 hour.

9.) Signs shall adhere to the following requirements:
- Signs placed on plastic barrels or drums shall be made of ABS plastic or plywood.
- Signs placed on skids shall be made of plywood or aluminum.
- Aluminum signs shall have a minimum thickness of 0.08".
- Plywood signs shall have a minimum thickness of 1 / 2".
- ABS Plastic signs shall have a minimum thickness of 0.13". Plastic signs cannot exceed 18" by 24" in size and shall be reinforced with 2" wide, 0.08" thick aluminum slats, as depicted below:

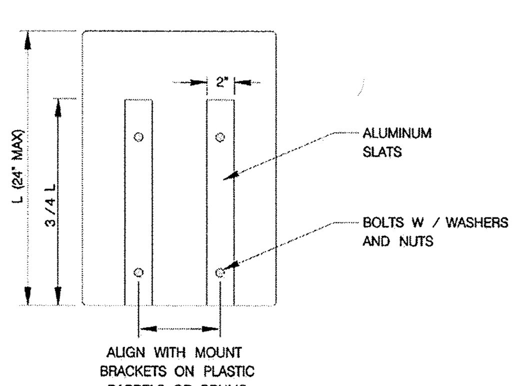

- No other material shall be accepted without the express written approval of the Traffic Engineer.

(See TxDOT BC–03 Sheets for specific construction information.)

LONG TERM / INTERMEDIATE TERM SIGN SUPPORT

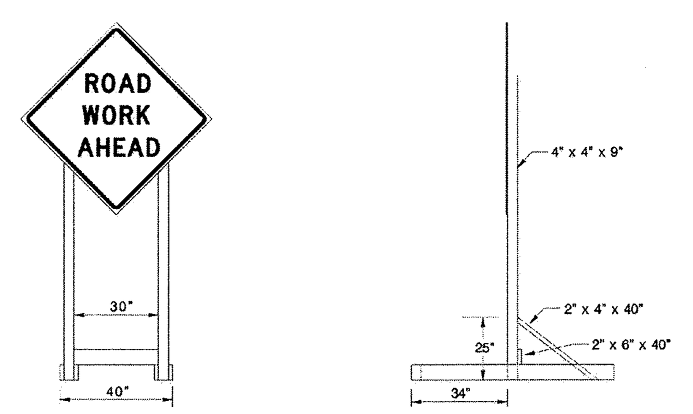

1.) 48" X48" signs must be mounted independently.

2.) A maximum of two signs can be mounted on any one long term / intermediate term sign support.

3.) Sand bag all sign supports.

4.) Distance from the bottom of the sign to the existing ground shall be 7'.

5.) Distance from the header barricade rail to the face of the sign panel shall be 2' min. and 10' max.

6.) Steel tripods shall not be allowed.

(See TxDOT BC–03 Sheets for specific construction information)

JUNE 2005
CITY OF SAN ANTONIO
DEPARTMENT OF PUBLIC WORKS
TRAFFIC STANDARDS
BARRICADE AND CONSTRUCTION STANDARDS
SHEET 4 OF 4

THE ORIGINAL OF THIS DRAWING WAS SIGNED AND SEALED BY JOHN D. FRIEBELE, #46394 ON 06-20-05 AND IS ON FILE WITH THE TRAFFIC ENGINEERING DIVISION OF THE PUBLIC WORKS DEPARTMENT, CITY OF SAN ANTONIO.

___% SUBMITTAL | PROJECT NO.: ___ | DATE: ___
DRWN. BY: A.F.G. | DSGN. BY: E.N.M. | CHKD. BY: J.D.F./E.N.M. | SHEET NO.: ___ OF ___

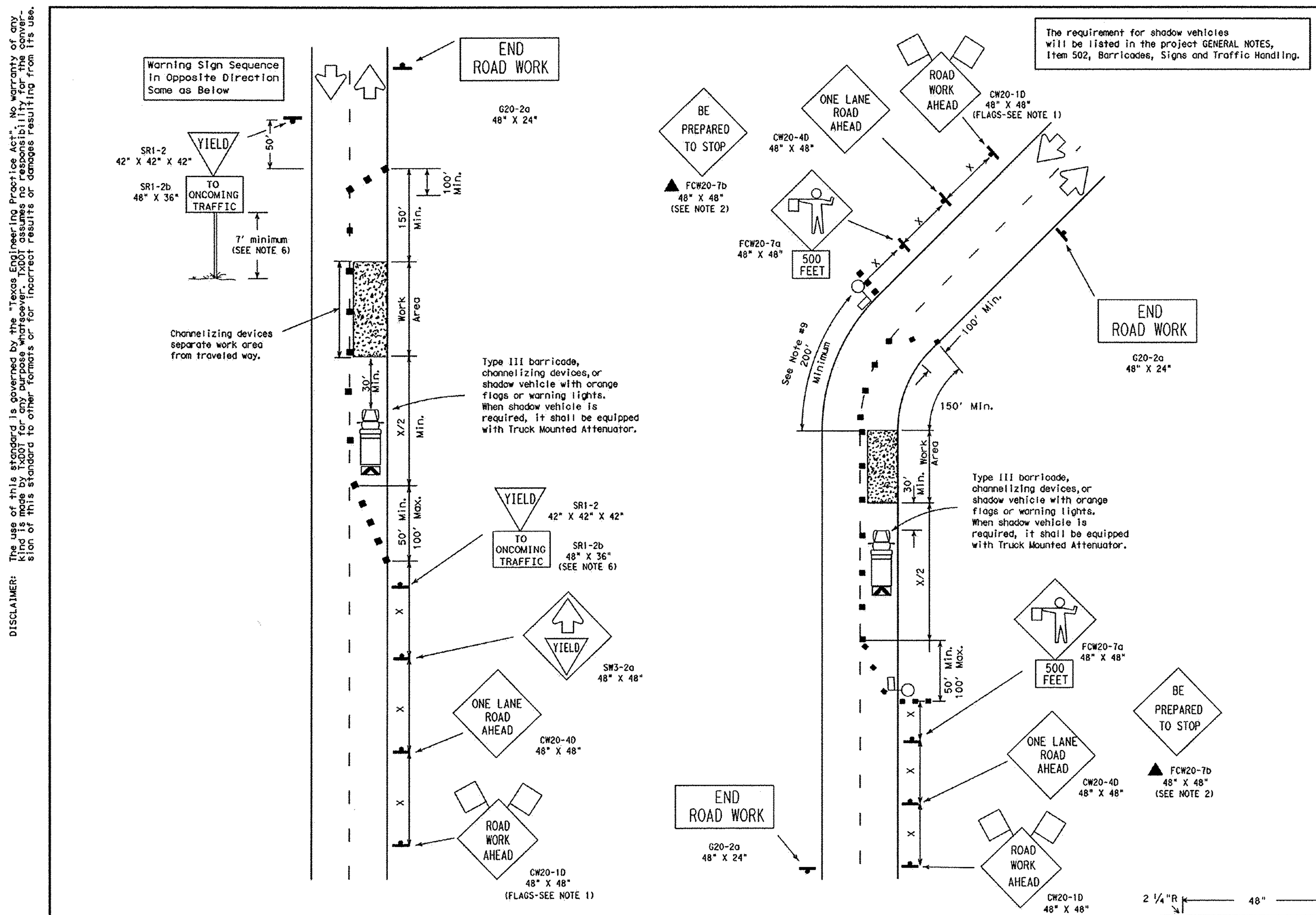

TCP (1-2a)

One Lane Closed
Adequate Field of View

TCP (1-2b)

One Lane Closed
Inadequate Field of View

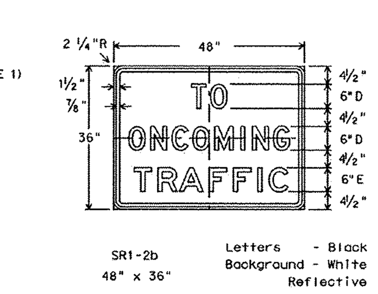

LEGEND

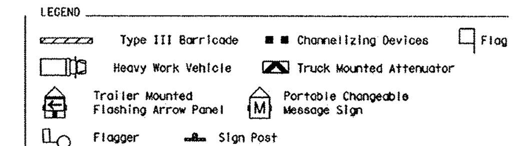

Posted Speed *	Formula	Minimum Desirable Taper Lengths ** 10' Offset	11' Offset	12' Offset	Suggested Maximum Spacing of Device On a Taper	On a Tangent	Minimum Sign Spacing X Distance
30	$L = \frac{WS^2}{60}$	150'	165'	180'	30'	60'-75'	120'
35		205'	225'	245'	35'	70'-90'	160'
40		265'	295'	320'	40'	80'-100'	240'
45	L=WS	450'	495'	540'	45'	90'-110'	320'
50		500'	550'	600'	50'	100'-125'	400'
55		550'	605'	660'	55'	110'-140'	500'
60		600'	660'	720'	60'	120'-150'	*600'
65		650'	715'	780'	65'	130'-165'	*700'
70		700'	770'	840'	70'	140'-175'	*800'

* Conventional Roads Only

** Taper lengths have been rounded off.
L=Length of Taper (FT.) W=Width of Offset (FT.) S=Posted Speed (MPH)

TYPICAL USAGE:				
MOBILE	SHORT DURATION	SHORT TERM STATIONARY	INTERMEDIATE TERM STATIONARY	LONG TERM STATIONARY
	✓	✓		

GENERAL NOTES:

1. Flags attached to signs are REQUIRED.
2. All traffic control devices illustrated are REQUIRED, except those denoted with the triangle symbol may be omitted when stated elsewhere in the plans.
3. The BE PREPARED TO STOP sign may be installed after the ONE LANE ROAD AHEAD sign, but proper sign spacing shall be maintained.
4. ROAD WORK AHEAD sign may be repeated if the visibility of the work zone is less than 1500'.

TCP(1-2a)

5. YIELD sign traffic control may be used on projects with approaches that have adequate sight distance. For projects in urban areas, work zones should be no longer than one half city block. In rural areas on roadways with less than 4000 ADT, work areas should be no longer than 400'.
6. YIELD TO ONCOMING TRAFFIC sign shall be placed on a support at a 7' minimum mounting height.

TCP(1-2b)

7. Flaggers should use two-way radios or other methods of communication to control traffic.
8. Length of work area should be based on the ability of flaggers to communicate.
9. Distance along curve of work area should be adequate length for motorists to identify and react to flagger signals.

Only pre-qualified products shall be used. A list of compliant products and their sources may be obtained by writing or faxing:

Standards Engineer
Traffic Operations Division - TE
Texas Department of Transportation
125 East 11th Street
Austin, Texas 78701-2483
Phone (512) 416-3335
Fax (512) 416-3161
E-mail TRF-STANDARD@mailgw.dot.state.tx.us

Texas Department of Transportation
Traffic Operations Division

TRAFFIC CONTROL PLAN

TCP(1-2)-98

No.	Revision	By	App.	Date
	ISSUE FOR BID			01-25-13

ISSUE FOR BID

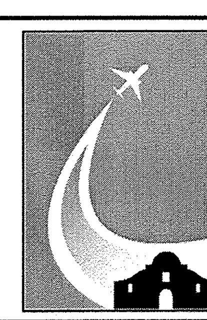

SAN ANTONIO AIRPORT SYSTEM

AECOM
TEXAS REGISTERED ENGINEERING FIRM F-3082
5757 Woodway Drive
Suite 101 West
Houston, Texas 77057
Tel: 713.267.3200
Fax: 713.267.3278

VICKREY & ASSOCIATES, INC.
CONSULTING ENGINEERS
12940 Country Parkway San Antonio, Texas 78216
Telephone: (210) 349-3271
Firm Registration No.: F-159

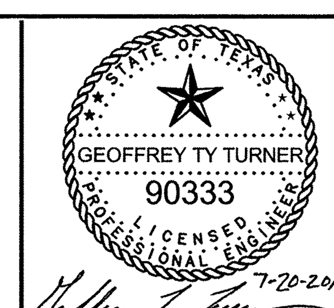

Designed By: TT
Drawn By: ML/JH
Checked By: TT
Date: 12-10-2012
Scale: AS SHOWN

SAN ANTONIO INTERNATIONAL AIRPORT
SOUTH PERIMETER ROAD REBID

TRAFFIC CONTROL DETAILS

Project No. 33-00160 | C.I.P. No. 0000 | A.I.P. No. 3-48-0192-069-2011 | Sheet C-711

LAST MODIFIED: Jul 17, 2012 - 3:04pm BY USER: MLinton
DWG. LOCATION: R:\1241-036\dwg\
DWG. NAME: sh_TCP details.dwg

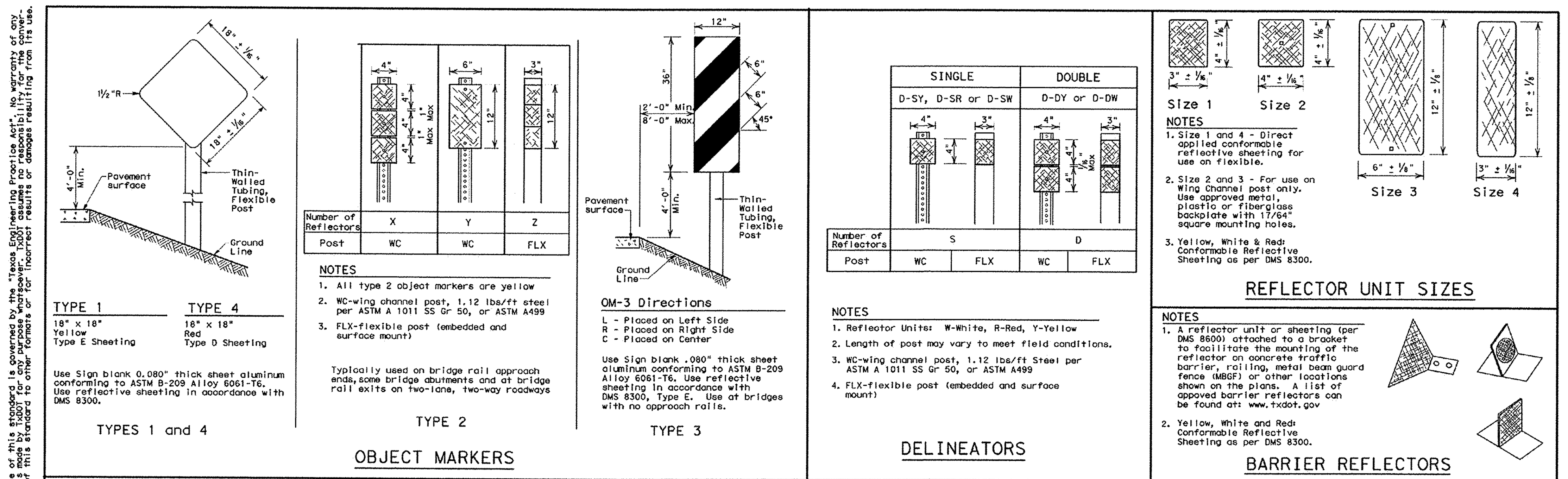

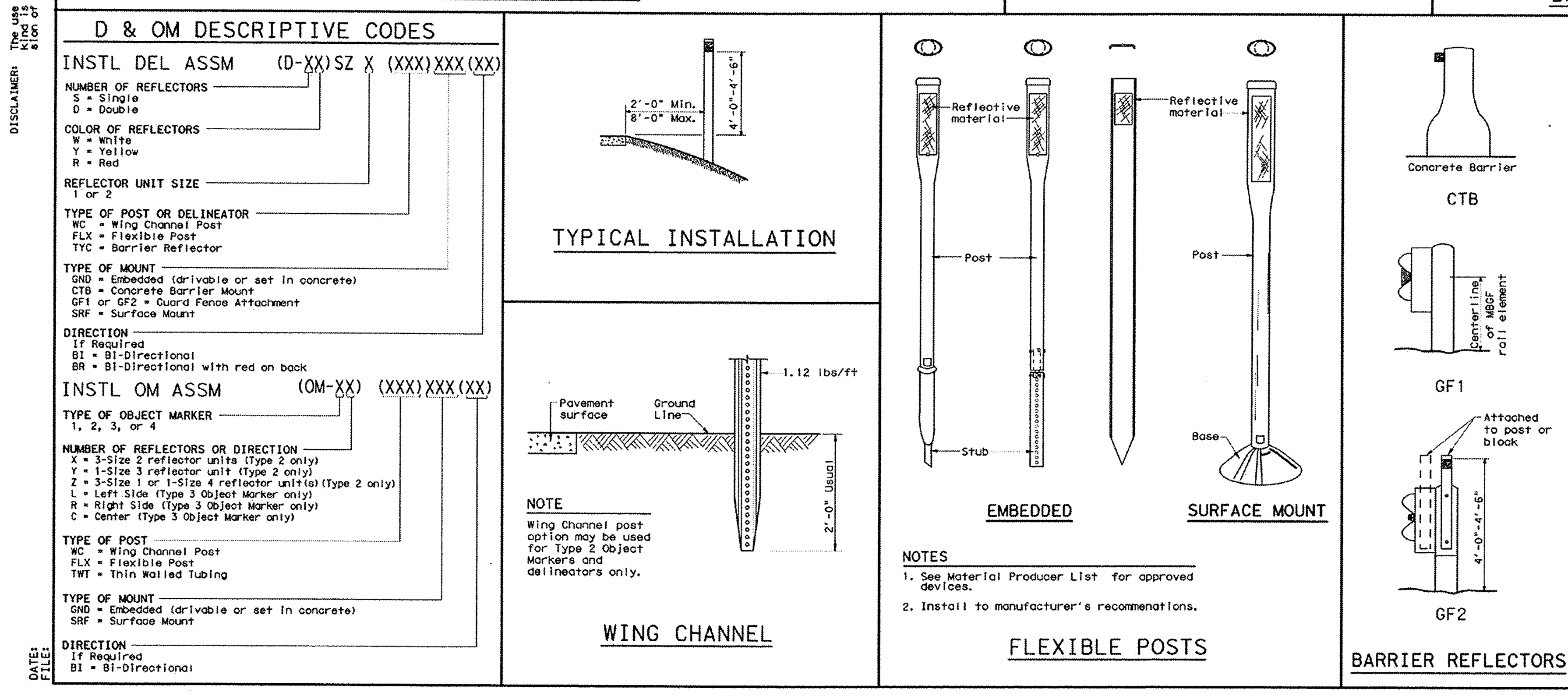

GENERAL NOTES

1. Place delineators on a section of roadway the same distance from the edge of pavement.
2. Where a restriction prevents consistent placement from the pavement edge, place the affected object markers in line with the innermost edge of the obstruction.
3. When object markers are more than 8'-0" from the edge of the pavement, it may not be possible to maintain a height of 4'-0"-4'-6". If this is the case, place the object markers as close to the desired height as possible.
4. Install all delineators, object markers and barrier reflectors in accordance with the manufacturer's recommendation.

DEPARTMENTAL MATERIAL SPECIFICATIONS	
FLEXIBLE DELINEATOR & OBJECT MARKER POSTS (EMBEDDED & SURFACE MOUNT TYPES)	DMS-4400
SIGN FACE MATERIALS	DMS-8300
DELINEATORS AND OBJECT MARKERS	DMS-8600

Texas Department of Transportation
Traffic Operations Division

DELINEATOR & OBJECT MARKER INSTALLATION AND MATERIAL DESCRIPTION
D & OM(1)-10

©TxDOT August 2004

DN: TXDOT | CK: TXDOT | DW: TXDOT | CK: TXDOT

REVISIONS: 10-09, 4-10

20A

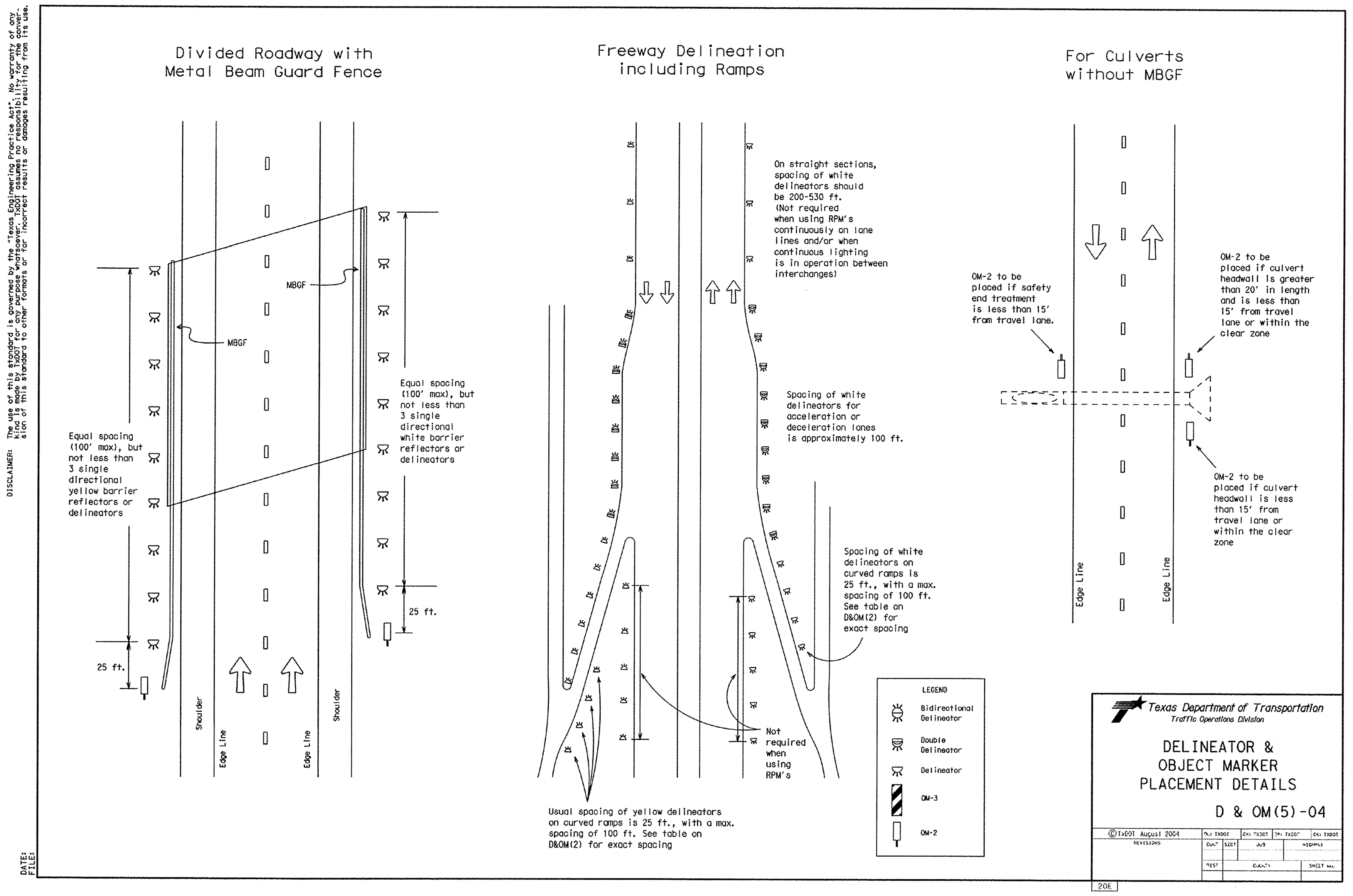

GENERAL NOTES

1.) THE EXISTING SIGNS LOCATED ON THE JOBSITE ARE THE PROPERTY OF THE CITY OF SAN ANTONIO. THROUGHOUT THE PERIOD OF THE CONTRACT, THE CONTRACTOR SHALL PROTECT THESE SIGNS SUCH THAT THEY ARE NOT DAMAGED IN THE COURSE OF CONSTRUCTION ACTIVITY. SUCH PROTECTION SHALL INCLUDE THE PERIOD AFTER SIGNS ARE REMOVED FROM INSTALLATION AND STORED BY THE CONTRACTOR OR DELIVERED TO TRAFFIC OPERATIONS. THE ASSISTANT TRAFFIC SUPERINTENDENT (207-7765) MUST BE NOTIFIED 48 HOURS IN ADVANCE PRIOR TO DELIVERY.

2.) AFTER SIGNS ARE REMOVED FROM INSTALLATION AND ARE BEING STORED BY THE CONTRACTOR, THE CONTRACTOR SHALL CONTACT THE TRAFFIC OPERATIONS SECTION OF THE PUBLIC WORKS DEPARTMENT (207-7765) AND ARRANGE FOR A CONVENIENT TIME TO DELIVER CITY SIGNS AND POLES.

3.) PRIOR TO THE START OF CONSTRUCTION, ALL EXISTING SIGNS WITHIN THE AREA OF CONSTRUCTION WILL BE INVENTORIED AND DOCUMENTED JOINTLY BY THE TRAFFIC ENGINEERING (207-7720) CONSTRUCTION INSPECTION AND THE CONTRACTOR. THIS DOCUMENT WILL BE JOINTLY SIGNED BY BOTH PARTIES REFLECTING THE SIGN TYPE, SIGN SIZE, SIGN CONDITION, SIGN LOCATION, REFLECTIVITY ADEQUACY, ETC. THE CONTRACTOR IS HELD ACCOUNTABLE FOR THESE SIGNS THROUGHOUT THE PROJECT AND AT THE PROJECTS COMPLETION.

4.) ALL GROUND MOUNTED SIGNS SHALL USE HIGH INTENSITY REFLECTIVE SHEETING.

5.) ALL OVERHEAD SIGNS SHALL USE DIAMOND GRADE REFLECTIVE SHEETING.

6.) ALL BLANKS TO BE ALUMINUM ALLOY NO. 5052-H38.

7.) "T" DENOTES THICKNESS OF SIGN BLANKS.

8.) ALL HOLES SHALL BE 3 / 8" DIAMETER DRILLED OR PUNCHED AS SHOWN ON EACH BLANK DETAIL AND SHALL BE FREE OF BURRS AND / OR ROUGH EDGES.

9.) SIGN BLANK CORNERS TO BE ROUNDED AS SHOWN ON EACH DETAIL.

10.) ALL SIGN BLANK TO BE ETCHED, DEGREASED, AND HAVE AN ALODINE FINISH PRIOR TO APPLICATION OF LEGENDS.

11.) ALL DETAILS ARE NOT TO SCALE.

12.) ALL DIMENSIONS ARE IN INCHES.

13.) ALL SIGNS SHALL BE MANUFACTURED AND INSTALLED IN CONFORMANCE TO THE TEXAS MANUAL ON UNIFORM TRAFFIC CONTROL DEVICES AND STANDARD HIGHWAY SIGNS (FHWA) LATEST EDITION.

14.) REINSTALLATION OF PREVIOUSLY EXISTING SIGNS, WHERE REQUIRED BY THE CITY TRAFFIC ENGINEER, SHALL BE AT THE CONTRACTOR'S EXPENSE.

TYPICAL GROUND SIGN INSTALLATION

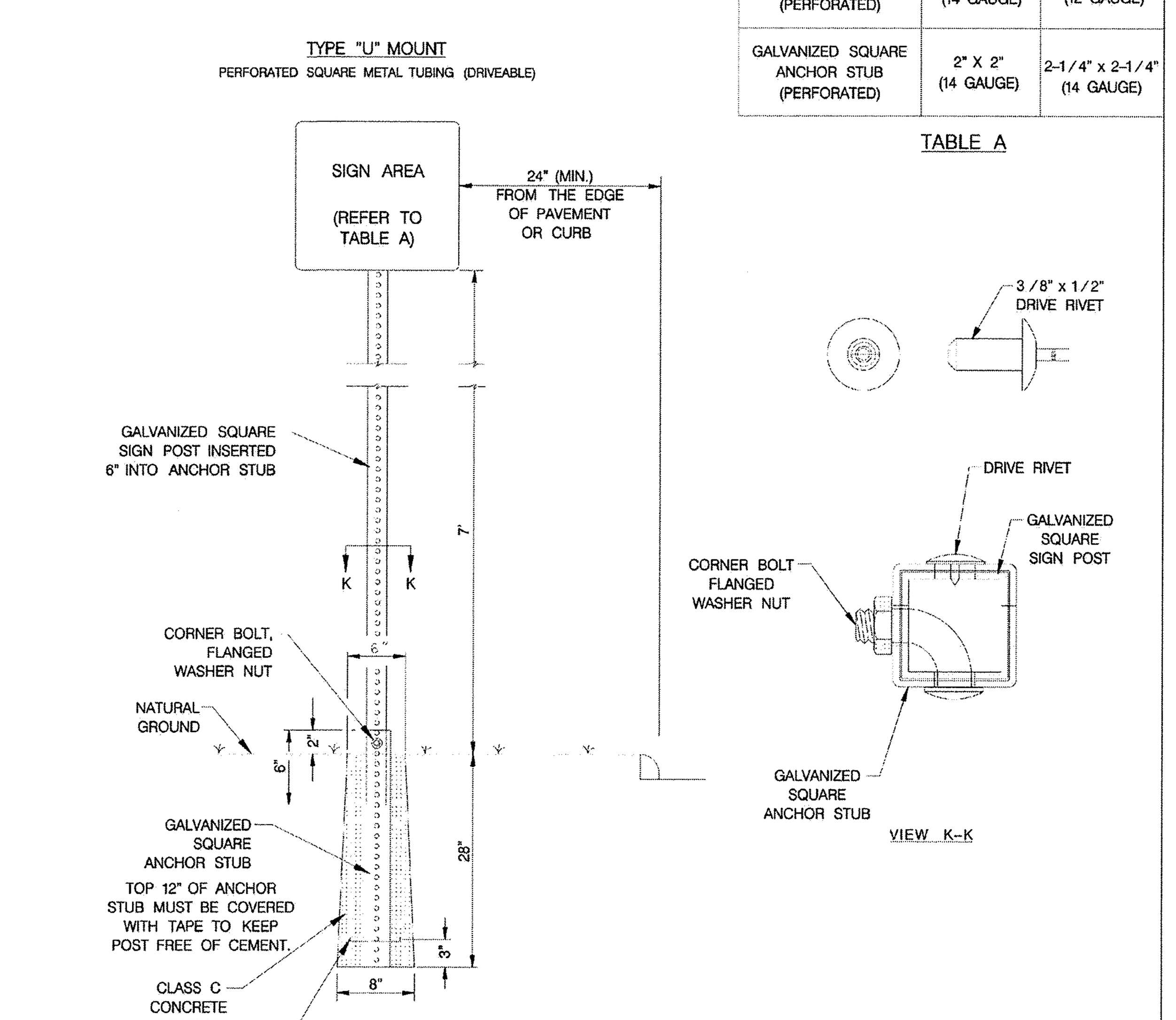

METAL TUBING	SIGN AREA	
	≤ 10 SQ. FT.	> 10 SQ. FT.
GALVANIZED SQUARE SIGN POST (PERFORATED)	1-3 / 4" x 1-3 / 4" (14 GAUGE)	2" x 2" (12 GAUGE)
GALVANIZED SQUARE ANCHOR STUB (PERFORATED)	2" X 2" (14 GAUGE)	2-1 / 4" x 2-1 / 4" (14 GAUGE)

TABLE A

THE ORIGINAL OF THIS DRAWING WAS SIGNED AND SEALED BY EDWARD N. MERY, P.E., #58698 ON 02.06.06 AND IS ON FILE WITH THE TRAFFIC ENGINEERING DIVISION OF THE PUBLIC WORKS DEPARTMENT, CITY OF SAN ANTONIO.

FEBRUARY 2006
CITY OF SAN ANTONIO
DEPARTMENT OF PUBLIC WORKS
TRAFFIC SIGN STANDARDS
GENERAL NOTES AND GROUND SIGN MOUNTING
SHEET 1 OF 4

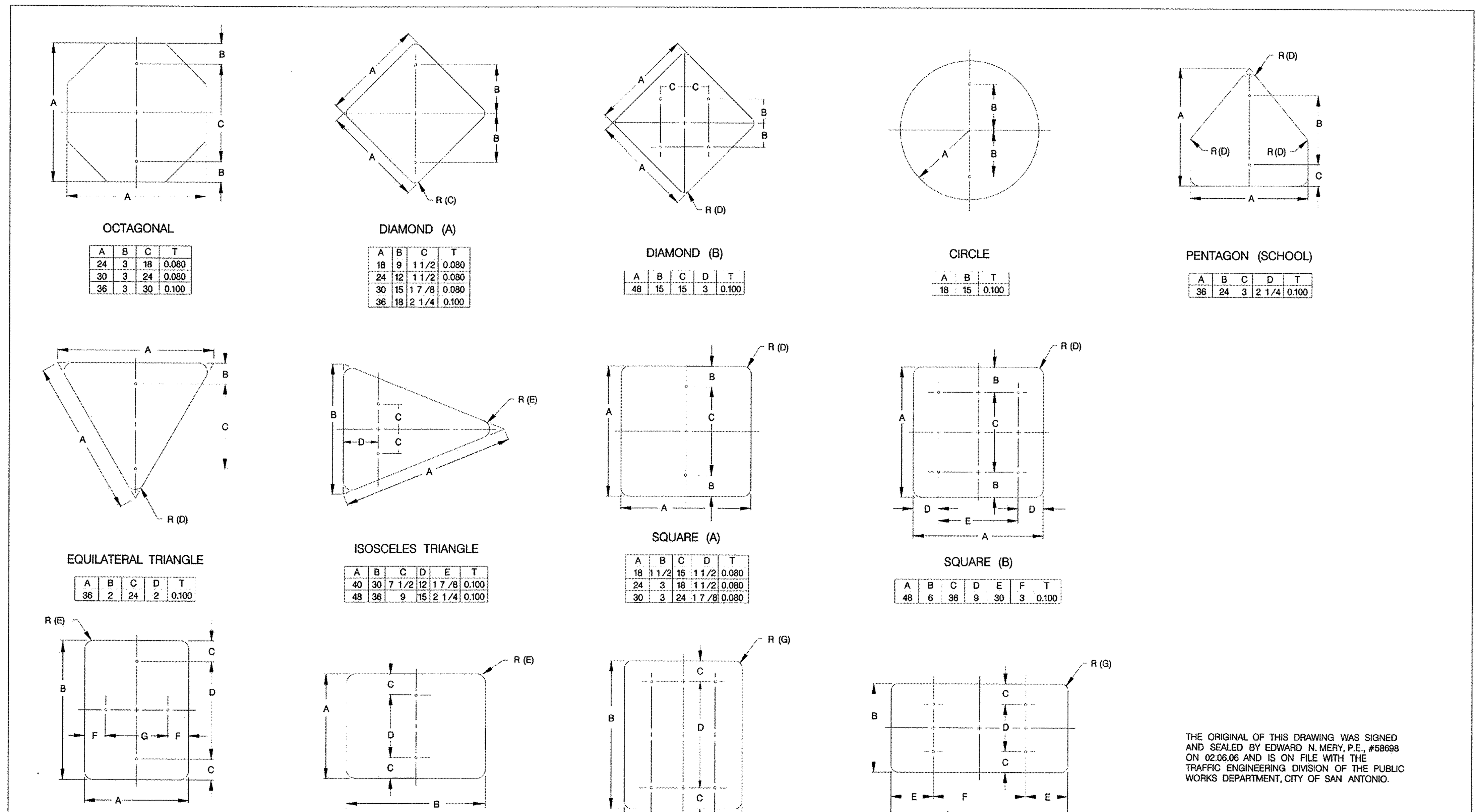

OCTAGONAL

A	B	C	T
24	3	18	0.080
30	3	24	0.080
36	3	30	0.100

DIAMOND (A)

A	B	C	T
18	9	1 1/2	0.080
24	12	1 1/2	0.080
30	15	1 7/8	0.080
36	18	2 1/4	0.100

DIAMOND (B)

A	B	C	D	T
48	15	15	3	0.100

CIRCLE

A	B	T
18	15	0.100

PENTAGON (SCHOOL)

A	B	C	D	T
36	24	3	2 1/4	0.100

EQUILATERAL TRIANGLE

A	B	C	D	T
36	2	24	2	0.100

ISOSCELES TRIANGLE

A	B	C	D	E	T
40	30	7 1/2	12	1 7/8	0.100
48	36	9	15	2 1/4	0.100

SQUARE (A)

A	B	C	D	T
18	1 1/2	15	1 1/2	0.080
24	3	18	1 1/2	0.080
30	3	24	1 7/8	0.080

SQUARE (B)

A	B	C	D	E	F	T
48	6	36	9	30	3	0.100

VERTICAL / HORIZONTAL RECTANGLE

A	B	C	D	E	F	G	T
12	18	1 1/2	15	1 1/2	1 1/2	9	0.080
12	36	3	30	1 1/2	1 1/2	9	0.080
18	24	1 1/2	21	1 1/2	1 1/2	15	0.080
24	30	3	24	1 1/2	3	18	0.080
24	36	3	30	1 1/2	3	18	0.080
24	48	6	36	1 7/8	3	18	0.080
30	36	3	30	1 7/8	3	24	0.080

HORIZONTAL RECTANGLE

A	B	C	D	E	T
6	12	1	4	1/4	0.080
6	18	1	4	1/4	0.080
20	36	1 1/2	17	1 1/2	0.080

VERTICAL RECTANGLE

A	B	C	D	E	F	G	T
5	7 3/4	1/2	6 3/4	1/2	4	1/4	0.100
48	60	6	48	9	30	3	0.100

HORIZONTAL RECTANGLE

A	B	C	D	E	F	G	T
48	24	2	20	2	44	1 7/8	0.100
48	36	3	30	3	42	2 1/4	0.100
60	24	2	20	2	56	1 1/2	0.100
60	36	3	30	3	54	2 1/4	0.100
48	30	3	24	3	42	1 7/8	0.100
60	30	3	24	3	54	1 7/8	0.100

THE ORIGINAL OF THIS DRAWING WAS SIGNED AND SEALED BY EDWARD N. MERY, P.E., #58698 ON 02.06.06 AND IS ON FILE WITH THE TRAFFIC ENGINEERING DIVISION OF THE PUBLIC WORKS DEPARTMENT, CITY OF SAN ANTONIO.

FEBRUARY 2006
CITY OF SAN ANTONIO
DEPARTMENT OF PUBLIC WORKS
TRAFFIC SIGN STANDARDS
GROUND MOUNTED SIGN SIZES
SHEET 3 OF 4

DRWN. BY: A.F.G. | DSGN. BY: E.N.M. | CHKD. BY: J.D.F./E.N.M.

No.	Revision	By	App.	Date
	ISSUE FOR BID			01-25-13

ISSUE FOR BID

SAN ANTONIO AIRPORT SYSTEM

AECOM
TEXAS REGISTERED ENGINEERING FIRM F-3082
5757 Woodway Drive
Suite 101 West
Houston, Texas 77057
Tel: 713.267.3200
Fax: 713.267.3278

VICKREY & ASSOCIATES, INC.
CONSULTING ENGINEERS
12940 Country Parkway San Antonio, Texas 78216
Telephone: (210) 349-3271
Firm Registration No.: F-159

STATE OF TEXAS — GEOFFREY TY TURNER — 90333 — LICENSED PROFESSIONAL ENGINEER — 7-20-2012

Designed By:	TT
Drawn By:	ML/JH
Checked By:	TT
Date:	12-10-2012
Scale:	AS SHOWN

SAN ANTONIO INTERNATIONAL AIRPORT
SOUTH PERIMETER ROAD REBID

ROADWAY DETAILS - SHEET 1

Project No. 33-00160 | C.I.P. No. 0000 | A.I.P. No. 3-48-0192-069-2011 | Sheet C-712

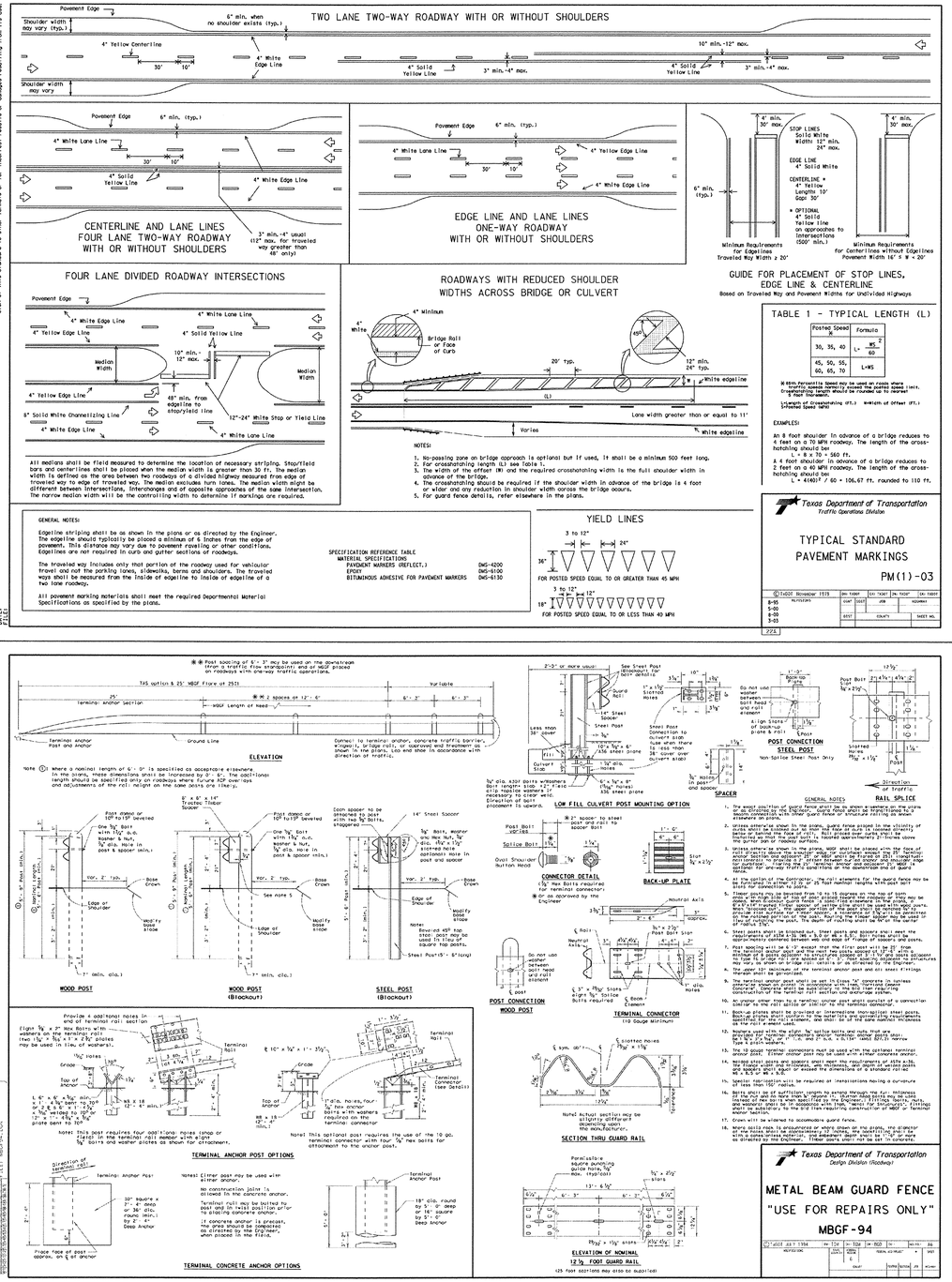

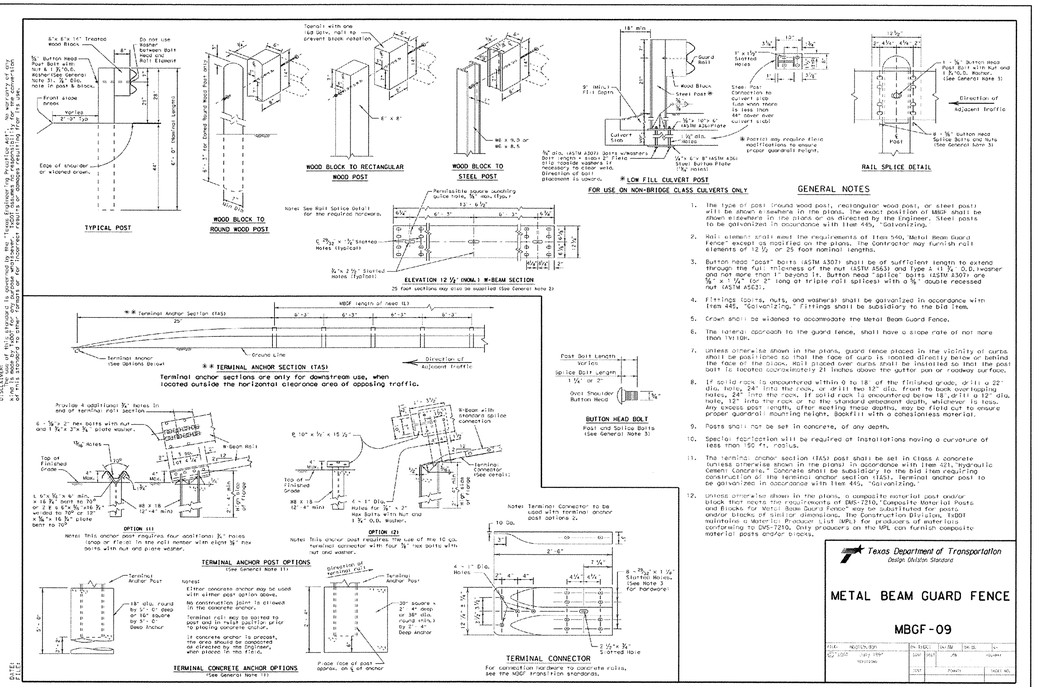

No.	Revision	By	App.	Date
	ISSUE FOR BID			01-25-13

ISSUE FOR BID

SAN ANTONIO AIRPORT SYSTEM

AECOM
TEXAS REGISTERED ENGINEERING FIRM F-3002
5757 Woodway Drive
Suite 101 West
Houston, Texas 77057
Tel: 713.267.3200
Fax: 713.267.3278

VICKREY & ASSOCIATES, INC.
CONSULTING ENGINEERS
12940 Country Parkway San Antonio, Texas 78216
Telephone: (210) 349-3271
Firm Registration No.: F-159

STATE OF TEXAS — GEOFFREY TY TURNER — 90333 — LICENSED PROFESSIONAL ENGINEER
7-20-2012

Designed By:	TT
Drawn By:	MLJH
Checked By:	TT
Date:	12-10-2012
Scale:	AS SHOWN

SAN ANTONIO INTERNATIONAL AIRPORT
SOUTH PERIMETER ROAD REBID

ROADWAY DETAILS - SHEET 2

Project No. 33-00160 | C.I.P. No. 0000 | A.I.P. No. 3-48-0192-069-2011 | Sheet C-713

LAST MODIFIED: Jul 17, 2012 - 3:05pm BY: USER: MLjohnson
DWG. LOCATION: R:\1241-0369\dwg\
DWG. NAME: sti_roadway details 2.dwg

ELECTRICAL LEGEND

□	PULL BOX OR HANDHOLE WITH COVER
⟨1⟩	REFERENCE TO SPECIAL ELECTRICAL NOTE NO. 1
—UC—	UNDERGROUND COMMUNICATIONS LINE
—US—	UNDERGROUND POWER LINE

AIRFIELD LIGHTING EQUIPMENT:

L-823	CABLE CONNECTOR (AC 150/5345-26)
L-824C	UG #8 AWG 5KV CABLE (AC 150/5345-7E)
L-824C	UG #6 AWG 5KV CABLE (AC 150/5345-7E)
L-830	ISOLATION TRANSFORMER (AC 150/5345-47)
L-850C	RUNWAY EDGE LIGHT (AC 150/5345-46B)
L-858	GUIDANCE SIGNS (AC 150/5345-44)
L-861T	TAXIWAY EDGE LIGHT (AC 150/5345-46B)
L-867	NON-LOAD BEARING BASE CANS (AC 150/5345-42F)
L-868	LOAD BEARING BASE CANS (AC 150/5345-42F)

GUIDANCE SIGNS NOTES:

GUIDANCE SIGN CIRCUITS CONNECTIONS SHOWN ON THE PLANS ARE APPROXIMATIONS. TAXIWAY GUIDANCE SIGNS SHALL BE CONNECTED TO TAXIWAY EDGE LIGHTS CIRCUIT, AND RUNWAY GUIDANCE SIGNS SHALL BE CONNECTED TO RUNWAY EDGE LIGHTS CIRCUIT.

ELECTRICAL GENERAL NOTES:

1. CONTRACTOR SHALL VERIFY ALL EXISTING CONDITIONS AT SITE WITHIN THE LIMITS OF THIS CONTRACT IN ORDER TO AVOID CONFLICTS WITH AREAS NOT IN THIS CONTRACT AND WITH ANY ACTIVITIES THAT MAY BE IN PROGRESS DURING THE PERFORMANCE OF THIS WORK.

2. CONTRACTOR SHALL COORDINATE WORK WITH OTHER DISCIPLINES WITHIN THE SAME CONTRACT AREA TO AVOID CONFLICTS. CARE SHOULD BE TAKEN THAT ALL SAFETY PROCEDURES ARE ADHERED TO.

3. FINAL PLACEMENT OF ALL LIGHT FIXTURES AND SIGNS SHALL BE FIELD STAKED BY CONTRACTOR FOR APPROVAL BY THE AIRPORT REPRESENTATIVES. NO WORK SHALL COMMENCE WITHOUT PRIOR APPROVAL.

4. EQUIPMENT SIZES ARE AS DESIGNED. CONDUIT AND CONDUCTOR SIZES, ETC., SHALL BE ADJUSTED TO THE EQUIPMENT SUBMITTED AND APPROVED FOR INSTALLATION ON THIS PROJECT. THIS SHALL INCLUDE THE FOLLOWING:

   A. LIGHTING AND POWER SYSTEMS.
   B. LIGHTNING PROTECTION SYSTEM.
   C. EQUIPMENT SAFETY GROUND SYSTEM.

5. ALL ELECTRICAL EQUIPMENT (LUMINAIRES, ETC.) MUST BE FAA-APPROVED OR SAT-APPROVED.

6. THE ELECTRICAL INSTALLATION, AT A MINIMUM, MUST MEET THE LATEST NEC AND LOCAL REGULATIONS.

7. THE CONTRACTOR MUST ASCERTAIN THAT ALL LIGHTING SYSTEM COMPONENTS FURNISHED (INCLUDING APPROVED EQUIPMENT) ARE COMPATIBLE IN ALL RESPECTS WITH EACH OTHER AND THE REMAINDER OF THE NEW/EXISTING SYSTEM. ANY INCOMPATIBLE COMPONENTS FURNISHED BY THE CONTRACTOR MUST BE REPLACED AT NO ADDITIONAL COST TO THE AIRPORT SPONSOR WITH A SIMILAR UNIT THAT IS APPROVED BY THE ENGINEER AND COMPATIBLE WITH THE REMAINDER OF THE AIRPORT LIGHTING SYSTEM.

8. IF THE CONTRACTOR FURNISHES AND INSTALLS AIRPORT LIGHTING EQUIPMENT REQUIRING ADDITIONAL WIRING, TRANSFORMERS, ADAPTERS, MOUNTINGS, ETC., TO THOSE SHOWN ON THE DRAWINGS AND/OR LISTED IN THE SPECIFICATIONS, ANY COST FOR THESE ITEMS MUST BE INCIDENTAL TO THE EQUIPMENT COST.

9. THE CONTRACTOR-INSTALLED EQUIPMENT (INCLUDING FAA-APPROVED) MUST NOT GENERATE ANY EMI IN THE EXISTING AND/OR NEW COMMUNICATIONS, WEATHER, AIR NAVIGATION, AND ATC EQUIPMENT. ANY EQUIPMENT GENERATING SUCH INTERFERENCE MUST BE REPLACED BY THE CONTRACTOR AT NO ADDITIONAL COST WITH EQUIPMENT MEETING THE APPLICABLE SPECIFICATIONS.

10. WHEN A SPECIFIC TYPE, STYLE, CLASS, ETC., OF FAA-APPROVED EQUIPMENT IS SPECIFIED ONLY THAT TYPE, STYLE, CLASS, ETC., WILL BE ACCEPTABLE, THOUGH EQUIPMENT OF OTHER TYPES, STYLE, CLASS, ETC., MAY BE FAA-APPROVED.

11. EXTREME CAUTION SHALL BE USED TO AVOID CUTTING EXISTING CABLES. COORDINATION WITH SAN ANTONIO INTERNATIONAL AIRPORT ELECTRICAL MAINTENANCE PERSONNEL IS MANDATORY. ALL EXISTING UNDERGROUND ELECTRICAL CABLES ARE NOT SHOWN. CONTRACTOR TO LOCATE THESE CABLES AND PROTECT. IF THE CONTRACTOR CUTS AN FAA CABLE, THE FOLLOWING WILL APPLY:

   A. CONTRACTOR WILL BE REQUIRED TO REPLACE THE CUT CABLE BETWEEN THE EXISTING PULL BOXES (AVERAGE DISTANCE BETWEEN PULL BOXES IS 2000 L.F.)
   B. ALL COMMUNICATIONS CABLE-SPLICING MUST BE DONE BY THE CONTRACTOR UTILIZING FAA APPROVED CERTIFIED SPLICERS.
   C. AFTER SPLICING, ALL CABLES WILL BE TESTED FOR CONTINUITY AND MEGGERED, BY THE CONTRACTOR, AS DIRECTED BY THE FAA REPRESENTATIVE.
   D. THE CONTRACTOR WILL COORDINATE ALL MATTERS RELATING TO FAA CABLES WITH THE PROJECT MANAGER AND THE FAA REPRESENTATIVE AND MUST HAVE CLEARANCE FROM THE PROJECT MANAGER BEFORE DIGGING.

12. THE CONTRACTOR SHALL INVESTIGATE ALL OTHER UNDERGROUND UTILITY SYSTEMS PRIOR TO ANY DITCHING FOR NEW RACEWAY SYSTEMS.

13. REPLACE NON-LED OBSTRUCTION LIGHTS IN THE SOW WITH ADB #SBOL-1320.

14. CONTRACTOR SHALL INSTALL NEW #8, 5 kV CABLE IN ALL NEW CONDUITS WITH #1/0 STRANDED BARE COPPER GROUND WIRE IN TRENCH.

15. ADDITIONAL DETAILS PERTAINING TO SPECIFIC ELECTRICAL SYSTEMS IN THE SOW ARE CONTAINED IN THE LATEST EDITIONS OF THE FAA ADVISORY CIRCULARS, INCLUDING BUT NOT LIMITED TO:

   A. AC 150/5340-18, STANDARDS FOR AIRPORT SIGN SYSTEMS.
   B. AC 150/5340-30, DESIGN AND INSTALLATION DETAILS FOR AIRPORT VISUAL AIDS.

ELECTRICAL ABBREVIATIONS

A, AMP	AMPERE
AC	ADVISORY CIRCULAR
AFG	ABOVE FINISHED GRADE
ALD	AVAILABLE LANDING DISTANCE
ALP	AIRPORT LAYOUT PLAN
ALS	APPROACH LIGHTING SYSTEM
AOA	AIR OPERATIONS AREA
APPROX	APPROXIMATE
AWG	AMERICAN WIRE GAUGE
BFG	BELOW FINISHED GRADE
BLDG	BUILDING
C	CONDUIT
CAB	CABINET
CKT	CIRCUIT
CONC	CONCRETE
CU	COPPER
DET	DETAIL
DIA	DIAMETER
DIM	DIMENSION
DME	DISTANCE MEASURING EQUIPMENT
DN	DOWN
DWGS	DRAWINGS
EA	EACH
ELEC	ELECTRICAL
ELEV	ELEVATION
EMI	ELECTROMAGNETIC INTERFERENCE
ENCL	ENCLOSURE
EQ	EQUAL
EQUIP	EQUIPMENT
EXT	EXTERIOR
FAA	FEDERAL AVIATION ADMINISTRATION
FLEX	FLEXIBLE
FT	FOOT; FEET
GA	GAGE, GAUGE
GALV	GALVANIZED
GCA	GLIDESLOPE CRITICAL AREA
GEC	GROUNDING ELECTRODE CONDUCTOR
GS	GLIDESLOPE
GRND	GROUND
HIRL	HIGH INTENSITY RUNWAY LIGHTS
HT	HEIGHT
IAW	IN ACCORDANCE WITH
ILS	INSTRUMENT LANDING SYSTEM
J-BOX	JUNCTION BOX
Kcmil	THOUSAND CIRCULAR MILS
KV	KILOVOLT
KVA	KILOVOLT AMPERES
KW	KILOWATT
KWH	KILOWATT HOUR
LCA	LOCALIZER CRITICAL AREA
LF	LINEAR FOOT
LOC	LOCALISER
LOCID	LOCATION IDENTIFIER
LPS	LIGHTNING PROTECTION SYSTEM
LV	LOW VOLTAGE
MAX	MAXIMUM
MFR	MANUFACTURER
MIN	MINIMUM
MTG	MOUNTING
N	NEUTRAL
NAVAID	NAVIGATIONAL AID
NEC	NATIONAL ELECTRICAL CODE
NEMA	NATIONAL ELECTRICAL MANUFACTURERS ASSOCIATION
NIC	NOT IN CONTRACT
NOM	NOMINAL
NTS	NOT TO SCALE
OC	ON CENTER, ϕ
P	POLE
PNL	PANEL
PVC	POLYVINYL CHLORIDE
ROFA	RUNWAY OBJECT FREE AREA
RPZ	RUNWAY PROTECTION ZONE
RSA	RUNWAY SAFETY AREA
RVR	RUNWAY VISUAL RANGE
RWY	RUNWAY
SAT	SAN ANTONIO INTERNATIONAL AIRPORT
SHT	SHEET
SOW	SCOPE OF WORK
STD	STANDARD
STL	STEEL
SW	SWITCH
SYS	SYSTEM
TDZ	TOUCHDOWN ZONE
TH	THRESHOLD
TOFA	TAXIWAY OBJECT FREE AREA
TSA	TAXIWAY SAFETY AREA
THK	THICK
TWY	TAXIWAY
TYP	TYPICAL
UG	UNDERGROUND
UL	UNDERWRITERS LABORATORY
V	VOLTS
VA	VOLT AMPERE
W	WATTS; WIDE; WIRE
WP	WEATHERPROOF
XLP	CROSSLINKED POLYETHYLENE

NOTES:

1. NOT ALL ABBREVIATIONS SHOWN ABOVE ARE NECESSARILY USED IN THE DRAWINGS.
2. THESE ABBREVIATIONS ARE STANDARD AND ARE PERTINENT TO THE CONDITIONS ON THIS SET OF DRAWINGS TO THE EXTENT APPLICABLE.
3. ADDITIONAL ABBREVIATIONS MAY APPEAR IN THIS SET OF DRAWINGS TO INDICATE SPECIFIC CONDITIONS THAT MAY OR MAY NOT BE LISTED HERE.

No.	Revision	By	App.	Date
	ISSUE FOR BID			01-25-13

ISSUE FOR BID

SAN ANTONIO AIRPORT SYSTEM

K. M. NG & ASSOCIATES, INC.
CONSULTING ENGINEERS
SAN ANTONIO, TEXAS 78201
TEXAS REGISTERED ENGINEERING FIRM F-442

AECOM
TEXAS REGISTERED ENGINEERING FIRM F-3082
5757 Woodway Drive
Suite 101 West
Houston, Texas 77057
Tel: 713.267.3200
Fax: 713.267.3278

12/5/12
STATE OF TEXAS
PAULUS B. MULJADI
81515
REGISTERED
PROFESSIONAL ENGINEER

Designed By:	R. Wilson
Drawn By:	E. Chavez
Checked By:	P. Muljadi
Date:	12/10/2012
Scale:	AS SHOWN

SAN ANTONIO INTERNATIONAL AIRPORT
RUNWAY 3-21 EXTENSION - NEW EXIT TAXIWAY, TAXIWAY REPAIRS, AND PERIMETER RD RECONSTRUCTION - RE-BID

ELECTRICAL LEGEND AND NOTES

Project No. 33-00160 | C.I.P. No. 0000 | A.I.P. No. 0000 | Sheet E-001

nglemon 12/5/2012 11:12:25 AM I:\Projects\Active\36_DM-MX\210.03\RET-SAT-RWY321-E-001.dgn

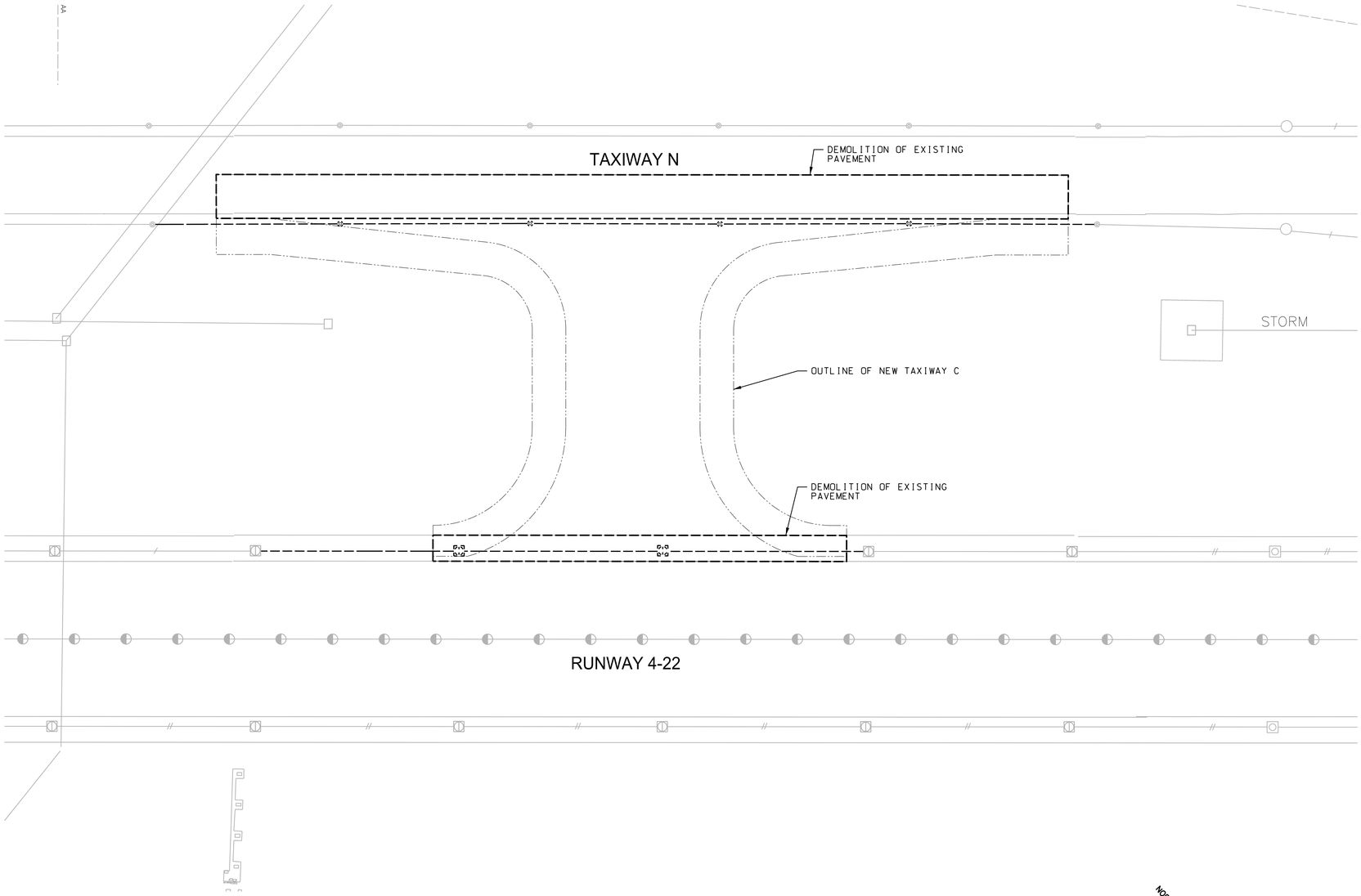

1 E-101 ELECTRICAL DEMOLITION PLAN
TAXIWAY "C"

SCALE: 1" = 60'

NORTH

DEMOLITION LEGEND

REMAIN	DESCRIPTION	REMOVE
	UNDERGROUND CIRCUITRY	
	TAXIWAY EDGE LIGHTS	
	ELEVATED RUNWAY EDGE LIGHTS	

GENERAL NOTES:

1. CONTRACTOR TO REMOVE AND SALVAGE EXISTING RUNWAY AND TAXIWAY EDGE LIGHTING FIXTURES AND STORE FOR REINSTALLATION.
2. CONTRACTOR TO PROVIDE JUMPERS AS REQUIRED TO KEEP EDGE LIGHTS OPERATIONAL IN ACTIVE LIGHTING CIRCUIT.
3. REFERENCE SHEET E-102 FOR NEW ELECTRICAL INSTALLATION.
4. LIGHTING FIXTURES REMOVED AND NOT REINSTALLED TO BECOME PROPERTY OF SAT.

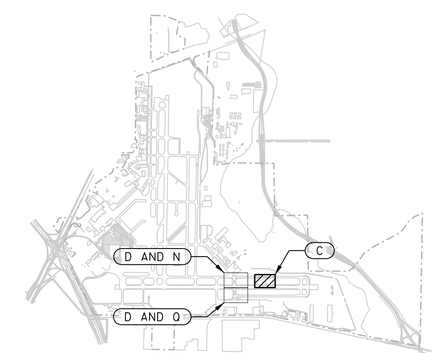

KEY PLAN
NO SCALE

60 0 60 120
SCALE OF FEET

No.	Revision	By	App.	Date
	ISSUE FOR BID			01-25-13

ISSUE FOR BID

SAN ANTONIO AIRPORT SYSTEM

K. M. NG & ASSOCIATES, INC.
CONSULTING ENGINEERS
SAN ANTONIO, TEXAS 78201
TEXAS REGISTERED ENGINEERING FIRM F-442

AECOM
TEXAS REGISTERED ENGINEERING FIRM F-0052
5757 Woodway Drive
Suite 101 West
Houston, Texas 77057
Tel: 713.267.3200
Fax: 713.267.3278

12/5/12
STATE OF TEXAS
PAULUS B. MULJADI
81515
REGISTERED PROFESSIONAL ENGINEER

Designed By: R. Wilson
Drawn By: E. Chavez
Checked By: P. Muljadi
Date: 12/10/2012
Scale: AS SHOWN

SAN ANTONIO INTERNATIONAL AIRPORT
RUNWAY 3-21 EXTENSION - NEW EXIT TAXIWAY, TAXIWAY REPAIRS, AND PERIMETER RD RECONSTRUCTION - RE-BID

ELECTRICAL DEMOLITION PLAN
TAXIWAY C

Project No. 33-00160 | C.I.P. No. 0000 | A.I.P. No. 0000 | Sheet E-101

nglemon 12/5/2012 11:12:30 AM I:\Projects\Active\36_DM_AN\210.03\RET-SAT-RWY321-E-101.dgn

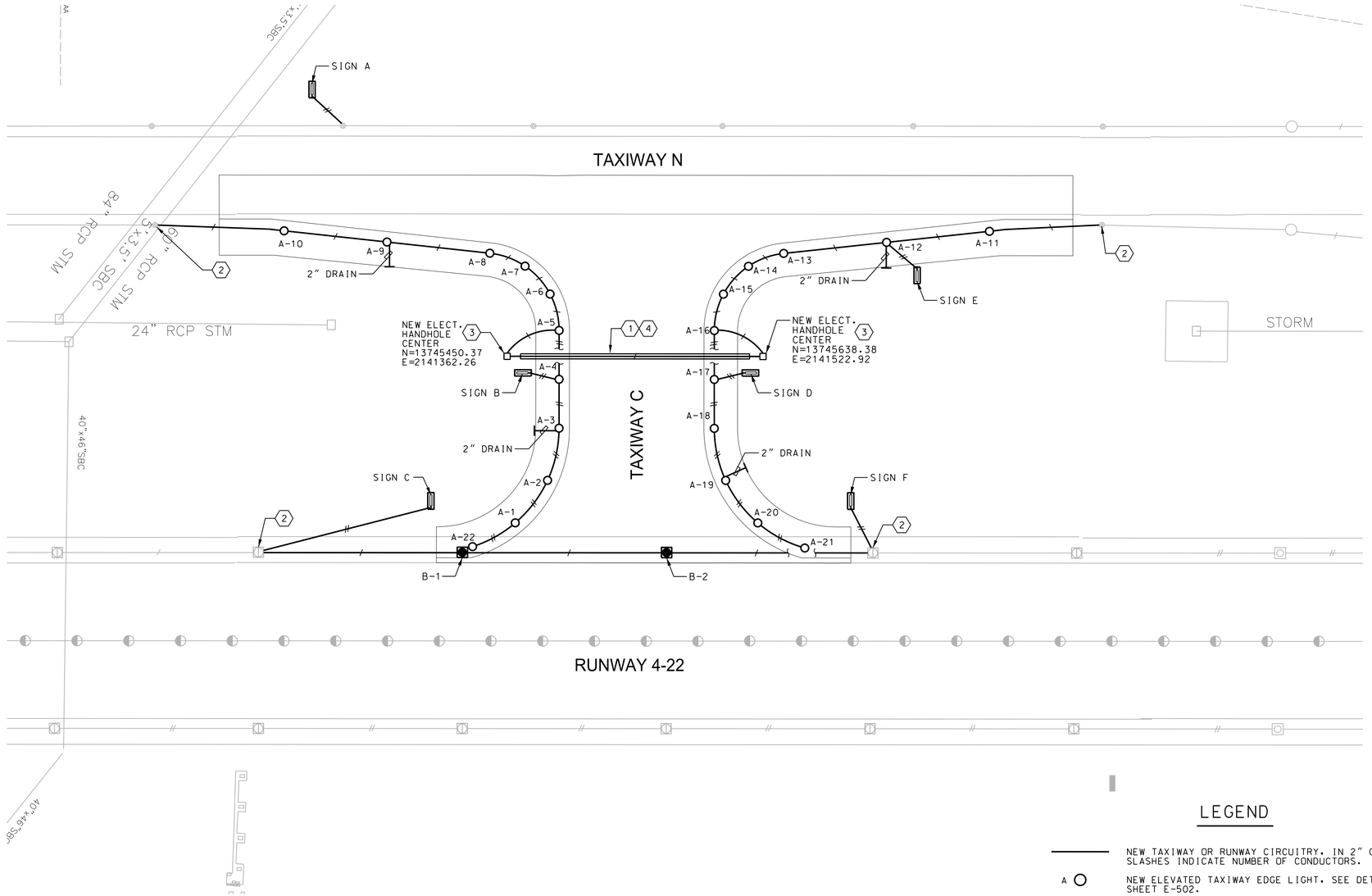

1 E-102 ELECTRICAL PLAN TAXIWAY "C"

SCALE: 1" = 60'

NORTH

TARGET SURVEY CONTROL DATA

TAXIWAY "C" LIGHTS

LIGHT	NORTHING	EASTING
A-1	13745351.93	2141489.75
A-2	13745402.32	2141478.79
A-3	13745443.46	2141447.70
A-4	13745474.13	2141411.79
A-5	13745504.81	2141375.88
A-6	13745520.99	2141343.48
A-7	13745520.10	2141307.28
A-8	13745502.36	2141275.72
A-9	13745433.76	2141202.95
A-10	13745365.16	2141130.19
A-11	13745883.29	2141573.02
A-12	13745800.74	2141516.58
A-13	13745718.19	2141460.15
A-14	13745684.23	2141447.54
A-15	13745648.32	2141452.31
A-16	13745618.83	2141473.35
A-17	13745588.14	2141509.27
A-18	13745557.45	2141545.19
A-19	13745553.19	2141590.59
A-20	13745530.18	2141641.97
A-21	13745548.97	2141689.89
A-22	13745305.62	2141480.47

NOTE:

CONTROL IS FROM CENTER OF FIXTURE.

TARGET SURVEY CONTROL DATA

RUNWAY 4/22 LIGHTS

LIGHT	NORTHING	EASTING
B-1	13745294.56	2141478.30
B-2	13745444.54	2141606.55

NOTE:

CONTROL IS FROM CENTER OF FIXTURE.

TARGET SURVEY CONTROL DATA

SIGNS

SIGN	NORTHING	EASTING
A	13745471.09	2141047.64
B	13745455.35	2141387.59
C	13745300.51	2141424.44
D	13745615.03	2141523.98
E	13745805.66	2141556.29
F	13745608.99	2141687.88

NOTE:

CONTROL IS FROM SIGN CENTER EDGE ON PAVEMENT SIDE. AS SHOWN ON DETAIL 1 SHEET E-504 PLAN VEIW.

GENERAL NOTES:

1. ALL NEW RUNWAY EDGE LIGHT CONDUCTORS TO BE #6 AWG.
2. ALL NEW TAXIWAY EDGE LIGHT CONDUCTORS TO BE #8 AWG.
3. REFER TO SHEET E-501 FOR GUIDANCE SIGN INFORMATION.
4. PROVIDE IDENTIFICATION NUMBER AT EACH NEW TWY AND RWY EDGE LIGHT. COORDINATE WITH SAT.

LEGEND

- NEW TAXIWAY OR RUNWAY CIRCUITRY, IN 2" CONDUITS. SLASHES INDICATE NUMBER OF CONDUCTORS.
- A ○ NEW ELEVATED TAXIWAY EDGE LIGHT, SEE DETAIL 1, SHEET E-502.
- B ◉ NEW FLUSH-MOUNTED RUNWAY EDGE LIGHT, SEE DETAIL 1, SHEET E-503.
- NEW GUIDANCE SIGN, SEE SHEET E-504.

SPECIAL ELECTRICAL NOTES

SHEET E-102 ONLY

1. NEW 4-WAY DUCT BANK, SEE DETAILS ON SHEETS E-501 AND E-502.
2. CONNECT TO EXISTING CIRCUIT AT EXISTING LIGHT.
3. NEW PULL BOX, SEE SHEET E-505.
4. EXTEND DUCT BANK 5' BEYOND EDGE OF NEW PAVEMENT AND LOCATE PULL BOX 10' BEYOND EDGE OF PAVEMENT.

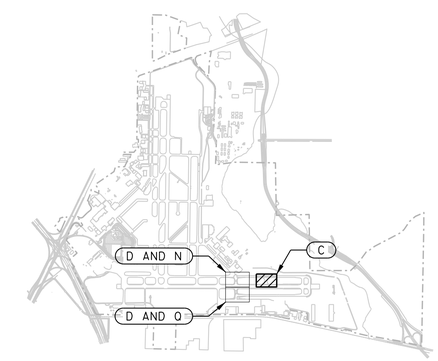

KEY PLAN
NO SCALE

60 0 60 120
SCALE OF FEET

No.	Revision	By	App.	Date
	ISSUE FOR BID			01-25-13

ISSUE FOR BID

SAN ANTONIO AIRPORT SYSTEM

K. M. NG & ASSOCIATES, INC.
CONSULTING ENGINEERS
SAN ANTONIO, TEXAS 78201
TEXAS REGISTERED ENGINEERING FIRM F-442

AECOM
TEXAS REGISTERED ENGINEERING FIRM F-3002
5757 Woodway Drive
Suite 101 West
Houston, Texas 77057
Tel: 713.267.3200
Fax: 713.267.3278

12/5/12
STATE OF TEXAS
PAULUS B. MULJADI
81515
REGISTERED
PROFESSIONAL ENGINEER

Designed By: R. Wilson
Drawn By: E. Chavez
Checked By: P. Muljadi
Date: 12/10/2012
Scale: AS SHOWN

SAN ANTONIO INTERNATIONAL AIRPORT
RUNWAY 3-21 EXTENSION - NEW EXIT TAXIWAY, TAXIWAY REPAIRS, AND PERIMETER RD RECONSTRUCTION - RE-BID

ELECTRICAL PLAN
TAXIWAY C

Project No. 33-00160 | C.I.P. No. 0000 | A.I.P. No. 0000 | Sheet E-102

nglemon 12/5/2012 11:12:35 AM I:\Projects\Active\36_DMJM\210.03\RET-SAT-RWY321-E-102.dgn

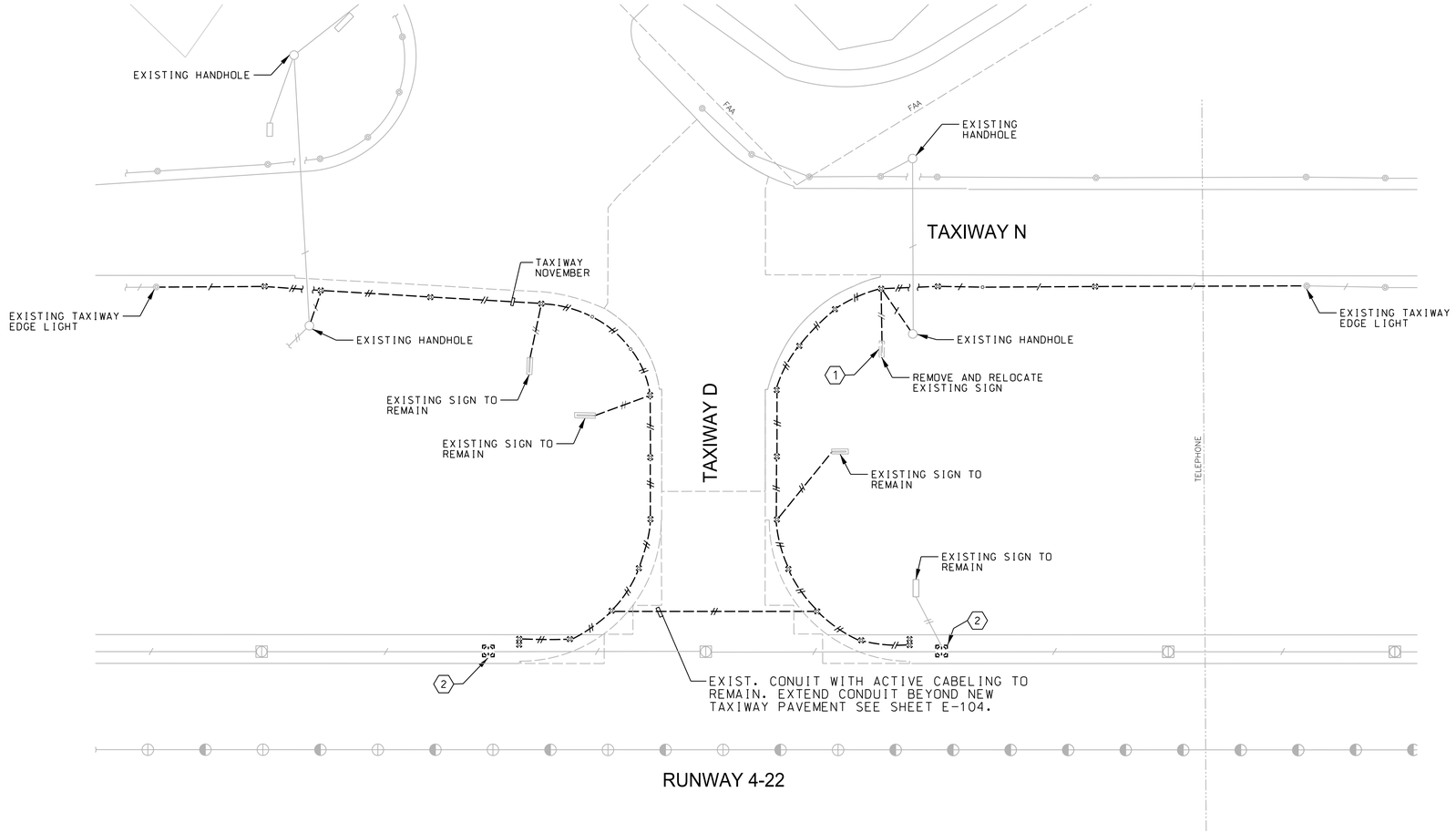

DEMOLITION LEGEND

REMAIN	DESCRIPTION	REMOVE
	UNDERGROUND CIRCUITRY	
	TAXIWAY EDGE LIGHTS	
	ELEVATED RUNWAY EDGE LIGHTS	

GENERAL NOTES:

1. CONTRACTOR TO REMOVE AND SALVAGE EXISTING RUNWAY AND TAXIWAY EDGE LIGHTING FIXTURES AND STORE FOR REINSTALLATION.
2. CONTRACTOR TO PROVIDE JUMPERS AS REQUIRED TO KEEP EDGE LIGHTS OPERATIONAL IN ACTIVE LIGHTING CIRCUIT.
3. REFERENCE SHEET E-102 FOR NEW ELECTRICAL INSTALLATION.
4. LIGHTING FIXTURES REMOVED AND NOT REINSTALLED TO BECOME PROPERTY OF SAT.
5. CONTRACTOR SHALL KEEP THE CARGO APRON CIRCUIT ACTIVE AT ALL TIMES DURING THE CONSTRUCTION. PROVIDE TEMPORARY WIRING AS REQUIRED DURING CONSTRUCTION PHASES. WIRING MAY BE INSTALLED ABOVE GRADE AND PROTECTED AS REQUIRED. MINIMUM TEMPORARY WIRING REQUIRED SHALL BE 5000 L.F.

SPECIAL ELECTRICAL NOTES:

SHEET E-103 ONLY

1. CONTRACTOR TO REMOVE AND SALVAGE EXIST. GUIDANCE SIGN AND STORE FOR REINSTALLATION. CONTRACTOR TO DEMOLISH EXIST. SIGN FOUNDATION.
2. REMOVE EXISTING RUNWAY LIGHT AND BASE. REINSTALL EXIST. LIGHT IN NEW BASE CAN . SEE E-104

1 / E-103 ELECTRICAL DEMOLITION PLAN - TAXIWAYS D AND N

SCALE: 1" = 60'

NORTH

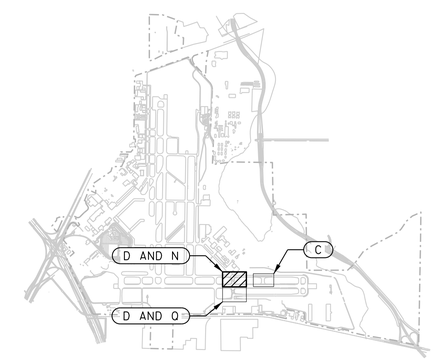

60 0 60 120
SCALE OF FEET

KEY PLAN
NO SCALE

No.	Revision	By	App.	Date
	ISSUE FOR BID			01-25-13

ISSUE FOR BID

SAN ANTONIO AIRPORT SYSTEM

K. M. NG & ASSOCIATES, INC.
CONSULTING ENGINEERS
SAN ANTONIO, TEXAS 78201
TEXAS REGISTERED ENGINEERING FIRM F-442

AECOM
TEXAS REGISTERED ENGINEERING FIRM F-3082
5757 Woodway Drive
Suite 101 West
Houston, Texas 77057
Tel: 713.267.3200
Fax: 713.267.3278

12/5/12
STATE OF TEXAS
PAULUS B. MULJADI
81515
REGISTERED
PROFESSIONAL ENGINEER

Designed By:	R. Wilson
Drawn By:	E. Chavez
Checked By:	P. Muljadi
Date:	12/10/2012
Scale:	AS SHOWN

SAN ANTONIO INTERNATIONAL AIRPORT
RUNWAY 3-21 EXTENSION - NEW EXIT TAXIWAY, TAXIWAY REPAIRS, AND PERIMETER RD RECONSTRUCTION - RE-BID

ELECTRICAL DEMOLITION PLAN
TAXIWAYS D AND N

Project No. 33-00160 | C.I.P. No. 0000 | A.I.P. No. 0000 | Sheet E-103

noleman 12/5/2012 11:12:40 AM I:\Projects\Active\36_DM\M\1210.03\RET-SAT-RW\321-E-103.dgn

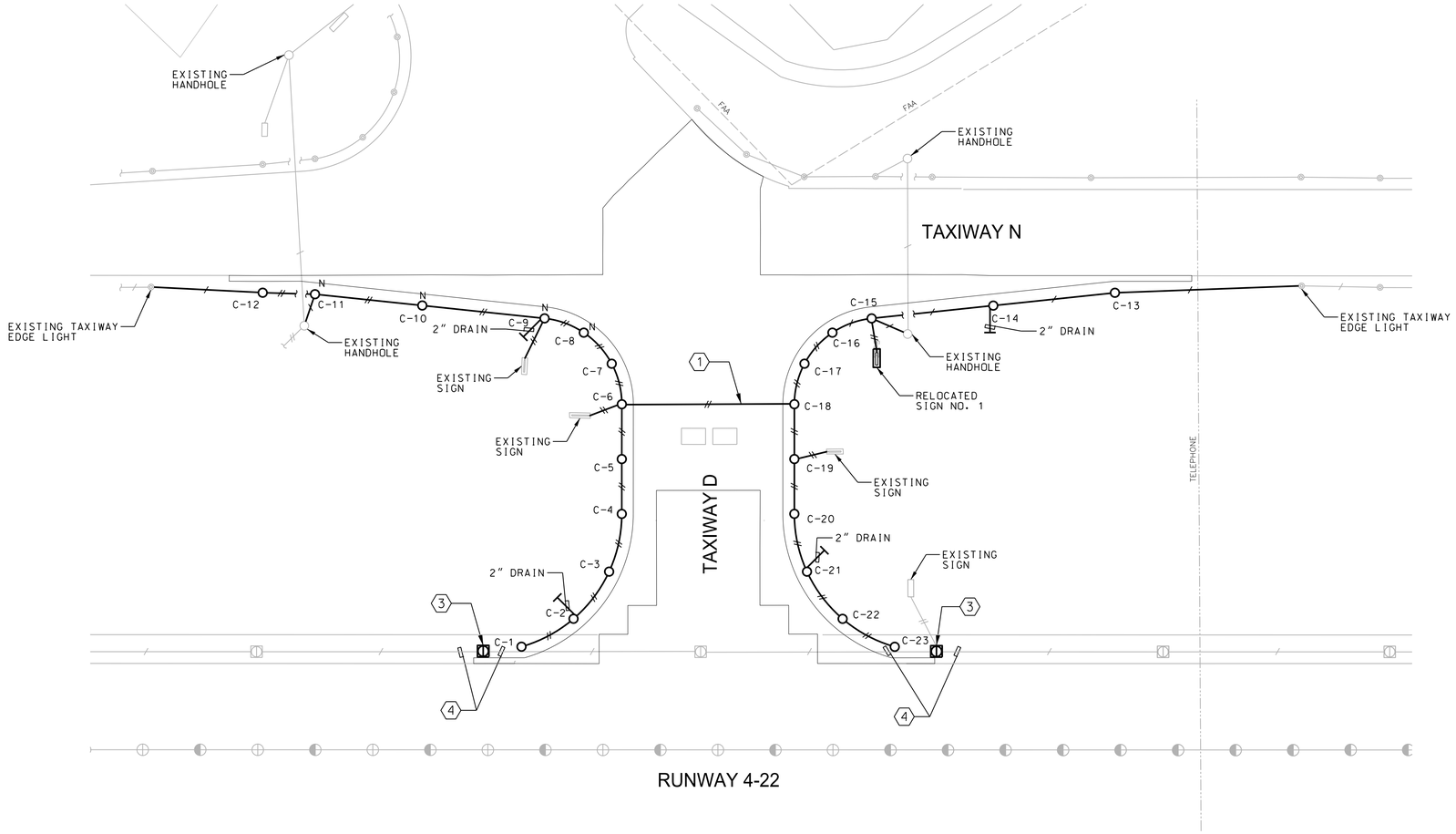

TARGET SURVEY CONTROL DATA

TAXIWAY "D" LIGHTS

LIGHT	NORTHING	EASTING
C-1	13744276.04	2140602.82
C-2	13744326.20	2140613.73
C-3	13744376.33	2140602.69
C-4	13744417.26	2140571.70
C-5	13744448.21	2140535.49
C-6	13744479.15	2140499.28
C-7	13744495.36	2140466.80
C-8	13744494.41	2140430.52
C-9	13744476.55	2140398.93
C-10	13744402.98	2140321.40
C-11	13744338.43	2140253.37
C-12	13744304.72	2140222.87
C-13	13744867.97	2140704.00
C-14	13744780.35	2140643.79
C-15	13744692.73	2140583.58
C-16	13744658.75	2140570.88
C-17	13744622.78	2140575.61
C-18	13744593.24	2140596.67
C-19	13744562.29	2140632.88
C-20	13744531.34	2140669.10
C-21	13744507.09	2140714.41
C-22	13744504.02	2140765.70
C-23	13744522.69	2140813.58

NOTE:

CONTROL IS FROM CENTER OF FIXTURE.

TARGET SURVEY CONTROL DATA

SIGNS

SIGN	NORTHING	EASTING
NO. 1	13744676.79	2140609.03

NOTE:

CONTROL IS FROM SIGN CENTER EDGE ON PAVEMENT SIDE. AS SHOWN ON DETAIL 1 SHEET E-504 PLAN VEIW.

LEGEND

NEW TAXIWAY OR RUNWAY CIRCUITRY, IN 2" CONDUITS. SLASHES INDICATE NUMBER OF CONDUCTORS.

A NEW ELEVATED TAXIWAY EDGE LIGHT, SEE DETAIL 1, SHEET E-502.

B NEW FLUSH-MOUNTED RUNWAY EDGE LIGHT, SEE DETAIL 1, SHEET E-503.

NEW GUIDANCE SIGN, SEE SHEET E-504.

1 / E-104 ELECTRICAL PLAN - TAXIWAYS D AND N IMPROVEMENTS

SCALE: 1" = 60'

NORTH

SPECIAL ELECTRICAL NOTES:

SHEET E-104 ONLY

1. PROVIDE NEW 4-4" CONCRETE ENCASED DUCTS BETWEEN NEW COMM. HANDHOLES AND PROVIDE 1-25 PAIR AND 1-50 PAIR COMM. CABLES FROM SPLICE NEW COMM. CABLES TO EXISTING COMM. CABLES IN NEW PULLBOXES. SEE DETAIL 3, SHEET E-103.
2. RELOCATED POSITION OF EXIST. SIGN. SEE E-504 FOR TYPICAL SIGN INSTALLATION.
3. PROVIDE NEW BASE CAN TO MATCH NEW GRADE ELEVATION. REINSTALL EXIST. RUNWAY EDGE LIGHT.
4. ADJUST CONDUIT AND WIRING AT NEW BASE CAN AS REQUIRED FOR NEW GRADE ELEVATION.

GENERAL NOTES:

1. ALL NEW RUNWAY EDGE LIGHT CONDUCTORS TO BE #6 AWG.
2. ALL NEW TAXIWAY EDGE LIGHT CONDUCTORS TO BE #8 AWG.
3. REFER TO SHEET E-501 FOR GUIDANCE SIGN INFORMATION.
4. CONTRACTOR TO PROVIDE JUMPERS AS REQUIRED TO KEEP EDGE LIGHTS OPERATIONAL IN ACTIVE LIGHTING CIRCUITS.
5. CONTRACTOR SHALL KEEP THE CARGO APRON CIRCUIT ACTIVE AT ALL TIMES DURING THE CONSTRUCTION. PROVIDE TEMPORARY WIRING AS REQUIRED DURING CONSTRUCTION PHASES. WIRING MAY BEINSTALLED ABOVE GRADE AND PROTECTED AS REQUIRED. MINIMUM TEMPORARY WIRING REQUIRED SHALL BE 5000 L.F.

60 0 60 120

SCALE OF FEET

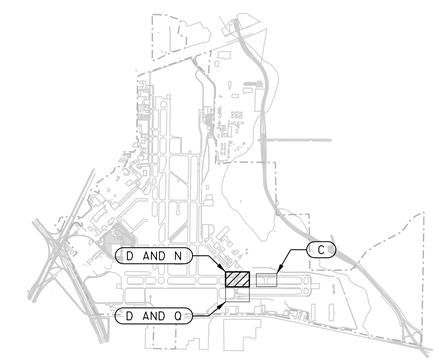

KEY PLAN

NO SCALE

No.	Revision	By	App.	Date
	ISSUE FOR BID			01-25-13

ISSUE FOR BID

SAN ANTONIO AIRPORT SYSTEM

K. M. NG & ASSOCIATES, INC.
CONSULTING ENGINEERS
SAN ANTONIO, TEXAS 78201
TEXAS REGISTERED ENGINEERING FIRM F-442

AECOM
TEXAS REGISTERED ENGINEERING FIRM F-5082
5757 Woodway Drive
Suite 101 West
Houston, Texas 77057
Tel: 713.267.3200
Fax: 713.267.3278

12/5/12
STATE OF TEXAS
PAULUS B. MULJADI
81515
REGISTERED
PROFESSIONAL ENGINEER

Designed By:	R. Wilson
Drawn By:	E. Chavez
Checked By:	P. Muljadi
Date:	12/10/2012
Scale:	AS SHOWN

SAN ANTONIO INTERNATIONAL AIRPORT
RUNWAY 3-21 EXTENSION - NEW EXIT TAXIWAY, TAXIWAY REPAIRS, AND PERIMETER RD RECONSTRUCTION - RE-BID

ELECTRICAL PLAN
TAXIWAYS D AND N IMPROVEMENTS

Project No. 33-00160 | C.I.P. No. 0000 | A.I.P. No. 0000 | Sheet E-104

noleman 12/5/2012 11:12:45 AM I:\Projects\Active\36_DM\M\1210.03\RET-SAT-RW\321-E-104.dgn

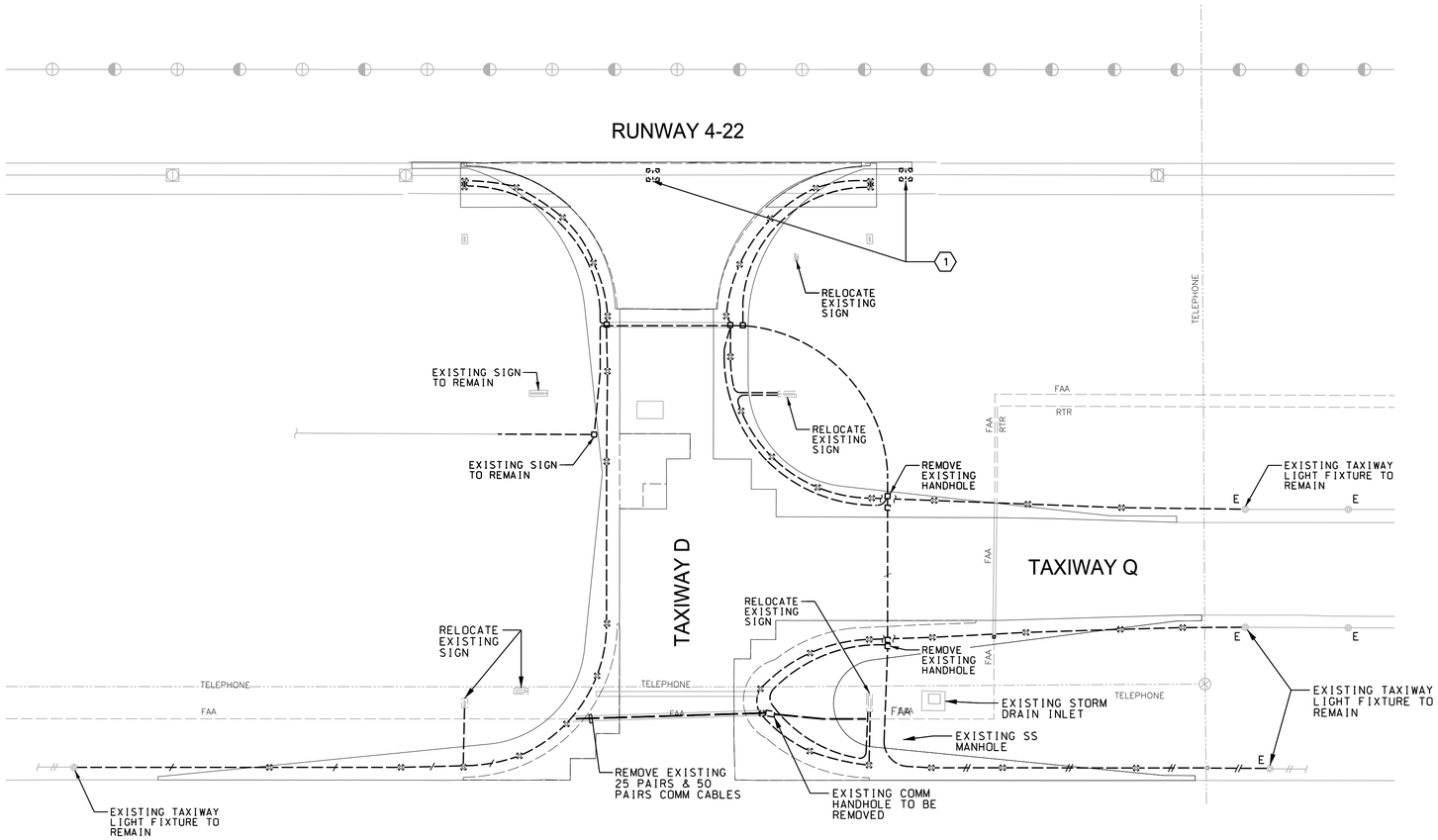

1 ELECTRICAL DEMOLITION PLAN – TAXIWAYS D AND Q

E-105

SCALE: 1" = 60'

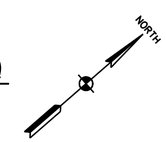

DEMOLITION LEGEND

REMAIN	DESCRIPTION	REMOVE
	UNDERGROUND CIRCUITRY	
	TAXIWAY EDGE LIGHTS	
	ELEVATED RUNWAY EDGE LIGHTS	

GENERAL NOTES:

1. CONTRACTOR TO REMOVE AND SALVAGE EXISTING RUNWAY AND TAXIWAY EDGE LIGHTING FIXTURES AND STORE FOR REINSTALLATION.
2. CONTRACTOR TO PROVIDE JUMPERS AS REQUIRED TO KEEP EDGE LIGHTS OPERATIONAL IN ACTIVE LIGHTING CIRCUIT.
3. REFERENCE SHEET E-102 FOR NEW ELECTRICAL INSTALLATION.
4. LIGHTING FIXTURES REMOVED AND NOT REINSTALLED TO BECOME PROPERTY OF SAT.
5. CONTRACTOR TO PROVIDE JUMPERS AS REQUIRED TO KEEP EDGE LIGHTS OPERATIONAL IN ACTIVE LIGHTING CIRCUIT.
6. CONTRACTOR SHALL KEEP THE CARGO APRON CIRCUIT ACTIVE AT ALL TIMES DURING THE CONSTRUCTION. PROVIDE TEMPORARY WIRING AS REQUIRED DURING CONSTRUCTION PHASES. WIRING MAY BE INSTALLED ABOVE GRADE AND PROTECTED AS REQUIRED. MINIMUM TEMPORARY WIRING REQUIRED SHALL BE 5000 L.F.

SPECIAL NOTES:

SHEET E-105 ONLY

1. CONTRACTOR TO REMOVE AND SALVAGE EXIST. RUNWAY LIGHT AND BASE. REINSTALL EXISTING LIGHT IN NEW BASE CAN. SEE SHEET E=106

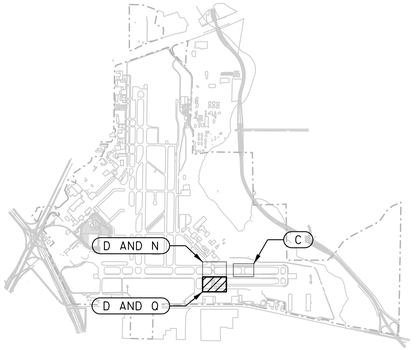

KEY PLAN

NO SCALE

60 0 60 120

SCALE OF FEET

No.	Revision	By	App.	Date
	ISSUE FOR BID			01-25-13

ISSUE FOR BID

SAN ANTONIO AIRPORT SYSTEM

K. M. NG & ASSOCIATES, INC.
CONSULTING ENGINEERS
SAN ANTONIO, TEXAS 78201
TEXAS REGISTERED ENGINEERING FIRM F-442

AECOM
TEXAS REGISTERED ENGINEERING FIRM F-3082
5757 Woodway Drive
Suite 101 West
Houston, Texas 77057
Tel: 713.267.3200
Fax: 713.267.3278

12/5/12
STATE OF TEXAS
PAULUS B. MULJADI
81515
REGISTERED
PROFESSIONAL ENGINEER

Designed By: R. Wilson
Drawn By: E. Chavez
Checked By: P. Muljadi
Date: 12/10/2012
Scale: AS SHOWN

SAN ANTONIO INTERNATIONAL AIRPORT
RUNWAY 3-21 EXTENSION - NEW EXIT TAXIWAY, TAXIWAY REPAIRS, AND PERIMETER RD RECONSTRUCTION - RE-BID

ELECTRICAL DEMOLITION PLAN
TAXIWAYS D AND Q

Project No. 33-00160 | C.I.P. No. 0000 | A.I.P. No. 0000 | Sheet E-105

nglemon 12/5/2012 4:17:32 PM I:\Projects\Active\36_DM_MN\1210.03\RET-SAT-RWY321-E-105.dgn

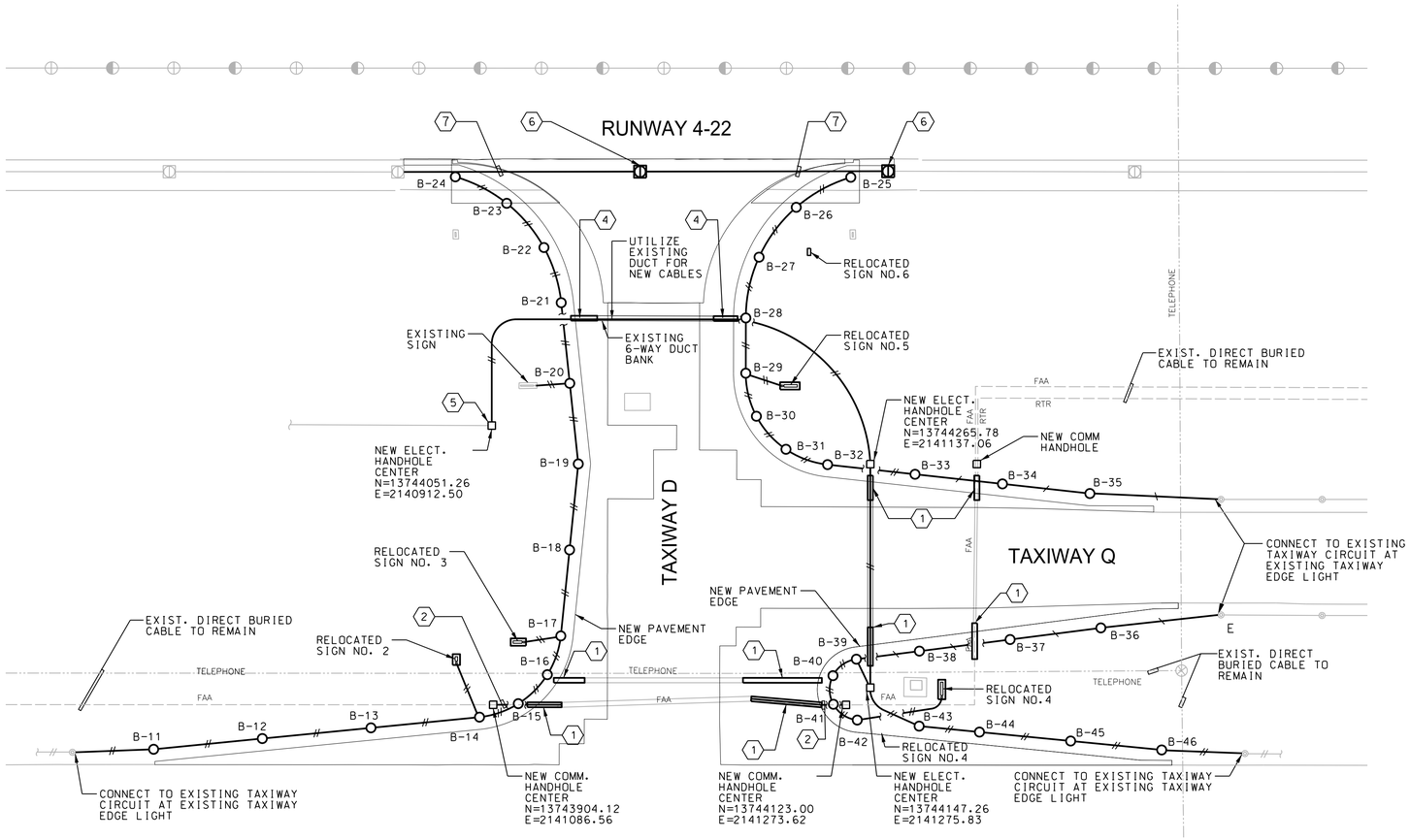

1 E-106 ELECTRICAL PLAN - TAXIWAYS D AND Q IMPROVEMENTS

SCALE: 1" = 60'

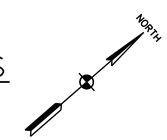

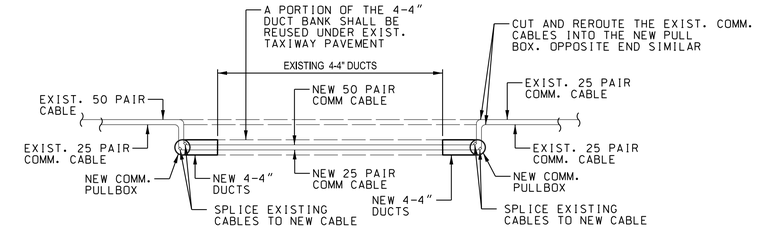

2 E-106 COMMUNICATIONS CABLE SCHEMATIC NO SCALE

TARGET SURVEY CONTROL DATA		
TAXIWAY "D" LIGHTS		
LIGHT	NORTHING	EASTING
B-11	13743669.81	2140934.23
B-12	13743742.93	2140985.18
B-13	13743816.04	2141036.12
B-14	13743889.07	2141087.01
B-15	13743920.29	2141099.20
B-16	13743953.69	2141096.58
B-17	13743982.63	2141079.67
B-18	13744033.63	2141030.92
B-19	13744084.64	2140982.16
B-20	13744122.08	2140927.60
B-21	13744159.53	2140873.04
B-22	13744178.06	2140829.63

TARGET SURVEY CONTROL DATA		
TAXIWAY "D" LIGHTS		
LIGHT	NORTHING	EASTING
B-23	13744178.42	2140782.44
B-24	13744160.56	2140738.76
B-25	13744405.73	2140948.66
B-26	13744355.98	2140938.40
B-27	13744306.45	2140949.64
B-28	13744266.01	2140980.36
B-29	13744236.68	2141014.62
B-30	13744220.47	2141046.98
B-31	13744221.31	2141083.16
B-32	13744238.99	2141114.74
B-33	13744288.14	2141167.07
B-34	13744337.30	2141219.39

TARGET SURVEY CONTROL DATA		
TAXIWAY "D" LIGHTS		
LIGHT	NORTHING	EASTING
B-35	13744386.45	2141271.72
B-36	13744322.00	2141360.95
B-37	13744259.52	2141320.05
B-38	13744197.08	2141279.19
B-39	13744153.69	2141250.79
B-40	13744130.43	2141248.60
B-41	13744115.52	2141266.59
B-42	13744121.97	2141289.04
B-43	13744157.15	2141325.61
B-44	13744191.44	2141361.26
B-45	13744243.29	2141415.16
B-46	13744295.04	2141468.96

NOTE:

CONTROL IS FROM CENTER OF FIXTURE.

TARGET SURVEY CONTROL DATA		
SIGNS		
SIGN	NORTHING	EASTING
NO. 2	13743904.41	2141039.97
NO. 3	13743955.34	2141063.03
NO. 4	13744187.47	2141318.54
NO. 5	13744253.66	2141042.77
NO. 6	13744342.14	2140970.70

NOTE:

CONTROL IS FROM SIGN CENTER EDGE ON PAVEMENT SIDE. AS SHOWN ON DETAIL 1 SHEET E-504 PLAN VEIW.

LEGEND

- NEW TAXIWAY OR RUNWAY CIRCUITRY. IN 2" CONDUITS. SLASHES INDICATE NUMBER OF CONDUCTORS.
- A — NEW ELEVATED TAXIWAY EDGE LIGHT. SEE DETAIL 1. SHEET E-502.
- B — NEW FLUSH-MOUNTED RUNWAY EDGE LIGHT. SEE DETAIL 1. SHEET E-503.
- NEW GUIDANCE SIGN. SEE SHEET E-504.

SPECIAL ELECTRICAL NOTES:

SHEET E-106 ONLY

1. EXTEND 4-4" CONCRETE ENCASED DUCT LINES AS REQUIRED FOR NEW TAXIWAY EXPANSION. THE CONTRACTOR SHALL PROVIDE SPLIT 4" PVC DUCTS AS REQUIRED TO EXTEND THE ACTIVE DUCTS. PROVIDE NEW DUCT BANK MARKER AT EACH END.
2. PROVIDE NEW 4-4" CONCRETE ENCASED DUCTS BETWEEN NEW COMM. HANDHOLES AND PROVIDE 1-25 PAIR AND 1-50 PAIR COMM. CABLES. SPLICE NEW COMM. CABLES TO EXISTING COMM. CABLES IN NEW PULLBOXES. SEE DETAIL 2 THIS SHEET.
3. NOT IN USED.
4. EXTEND 6-4" CONCRETE ENCASED DUCT LINES AS REQUIRED FOR NEW TAXIWAY EXPANSION. THE CONTRACTOR SHALL PROVIDE SPLIT 4" PVC DUCTS AS REQUIRED TO EXTEND THE ACTIVE DUCTS. PROVIDE NEW DUCT BANK MARKER AT EACH END.
5. INTERCEPT EXISTING TAXIWAY LIGHTING CIRCUIT AT NEW HANDHOLE.
6. PROVIDE NEW BASE CAN TO MATCH NEW GRADE ELEVATION. REINSTALL EXIST. RUNWAY EDGE LIGHT
7. PROVIDE NEW DUCT AND CABELING IN NEW PAVED AREA.

GENERAL NOTES:

1. ALL NEW RUNWAY EDGE LIGHT CONDUCTORS TO BE #6 AWG.
2. ALL NEW TAXIWAY EDGE LIGHT CONDUCTORS TO BE #8 AWG.
3. REFER TO SHEET E-501 FOR GUIDANCE SIGN INFORMATION.
4. CONTRACTOR TO PROVIDE JUMPERS AS REQUIRED TO KEEP EDGE LIGHTS OPERATIONAL IN ACTIVE LIGHTING CIRCUITS.
5. CONTRACTOR SHALL KEEP THE CARGO APRON CIRCUIT ACTIVE AT ALL TIMES DURING THE CONSTRUCTION. PROVIDE TEMPORARY WIRING AS REQUIRED DURING CONSTRUCTION PHASES. WIRING MAY BEINSTALLED ABOVE GRADE AND PROTECTED AS REQUIRED. MINIMUM TEMPORARY WIRING REQUIRED SHALL BE 5000 L.F.

60 0 60 120
SCALE OF FEET

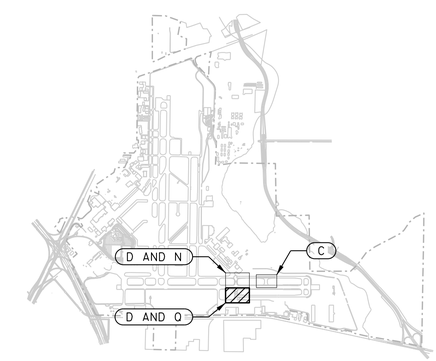

KEY PLAN
NO SCALE

No.	Revision	By	App.	Date
	ISSUE FOR BID			01-25-13

ISSUE FOR BID

SAN ANTONIO AIRPORT SYSTEM

K. M. NG & ASSOCIATES, INC.
CONSULTING ENGINEERS
SAN ANTONIO, TEXAS 78201
TEXAS REGISTERED ENGINEERING FIRM F-442

AECOM
TEXAS REGISTERED ENGINEERING FIRM F-3082
5757 Woodway Drive
Suite 101 West
Houston, Texas 77057
Tel: 713.267.3200
Fax: 713.267.3278

12/5/12
STATE OF TEXAS
PAULUS B. MULJADI
81515
REGISTERED PROFESSIONAL ENGINEER

Designed By: R. Wilson
Drawn By: E. Chavez
Checked By: P. Muljadi
Date: 12/10/2012
Scale: AS SHOWN

SAN ANTONIO INTERNATIONAL AIRPORT
RUNWAY 3-21 EXTENSION - NEW EXIT TAXIWAY, TAXIWAY REPAIRS, AND PERIMETER RD RECONSTRUCTION - RE-BID

ELECTRICAL PLAN
TAXIWAYS D AND Q IMPROVEMENTS

Project No. 33-00160 | C.I.P. No. 0000 | A.I.P. No. 0000 | Sheet E-106

nalleman 12/5/2012 11:12:54 AM I:\Projects\Active\36_DMJM\210.03\RET-SAT-RWY321-E-106.dgn

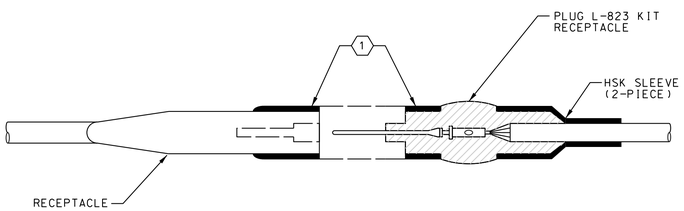

TRANSFORMER LEADS

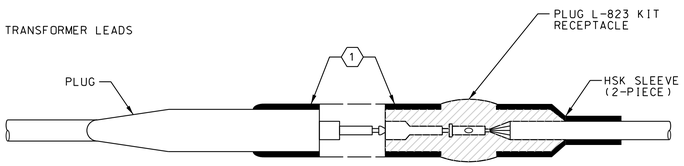

NOTE:

(1) PROVIDE TAPE PER SPECIFICATIONS

1 / E-501 5KV CONNECTOR DETAILS

NO SCALE

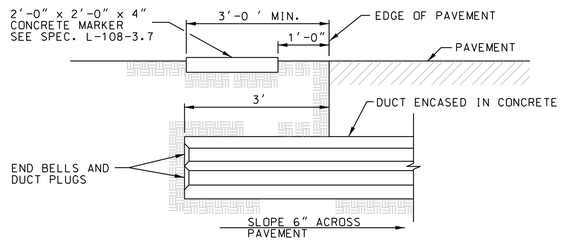

ELEVATION

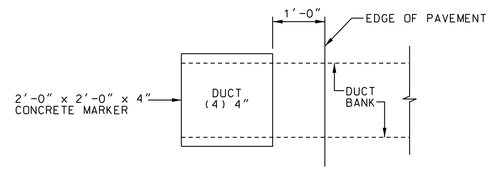

PLAN

2 / E-501 DUCT MARKER INSTALLATION DETAILS

NO SCALE

LEGEND

L = L-858L LOCATION SIGN
BLACK BACKGROUND WITH YELLOW LETTERS

Y = L-858Y INFORMATION OR BOUNDARY SIGN
YELLOW BACKGROUND WITH BLACK LETTERS

R - L-858R MANDATORY INSTRUCTION SIGN
RED BACKGROUND WITH WHITE LETTERS

D = L-858D LOCATION SIGN
BLACK BACKGROUND WITH WHITE NUMERALS

BLANK = SIGN PANEL WITHOUT INSCRIPTION. BLACK PANEL COLOR.

SIZE 3 = 18" LEGEND ON 30" PANEL

STYLE 3 = 8.5 TO 20 AMP CIRCUIT

CLASS 1 = -4°F TO +131°F

MODE 2 = 200 MPH WIND SPEED

TBA = TO BE ASSIGNED

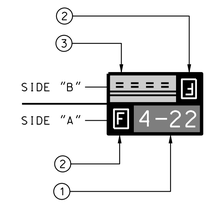

TYPICAL RUNWAY SIGN PANELS:

1. MANDATORY INSTRUCTION SIGN - RED PANEL WITH WHITE LETTERING RED PANEL OUTLINED IN BLACK.
2. LOCATION SIGN - BLACK PANEL WITH YELLOW LETTERING. YELLOW LETTERING OUTLINED BY YELLOW BORDER.
3. INFORMATION SIGN - YELLOW PANEL WITH BLACK INSCRIPTION.

SCHEDULE OF TAXIWAY AND RUNWAY EDGE LIGHTS

MARK	DESCRIPTION	REMARKS
A ○	NEW ELEVATED TAXIWAY EDGE LIGHT (PROVIDE LED LAMP) PROVIDE I.D. TAG	SEE DETAIL 1 / E-502
B ◉	NEW FLUSH-MOUNTED (INSET) RUNWAY EDGE LIGHT (LAMP SHALL MATCH EXISTING LAMPS ON THE CIRCUIT) PROVIDE I.D. TAG	SEE DETAIL 1 / E-503

NEW GUIDANCE SIGNS

NO.	SAT SIGN NO.	RUNWAY 4-22 SIGNS		TYPE L-858		SIZE	STYLE	CLASS	MODE	COMMENTS
		SIDE 1(A)	SIDE 2(B)	SIDE 1	SIDE 2					
A	TBA	[N] C→		L/R		3	3	1	2	
B	TBA	22-4 [C]	[C] →N←	R/L	L/R	3	3	1	2	
C	TBA	←C		L		1	3	1	2	
D	TBA	[C] 22-4	[C]	L/R	Y/L	3	3	1	2	
E	TBA	←C [N]		L/R		2	3	1	2	
F	TBA	C→		L		1	3	1	2	

GUIDANCE SIGNAGE NOTES:

1. SIGN SCHEDULE IS BASED ON INFORMATION PROVIDED BY SAN ANTONIO INTERNATIONAL AIRPORT. THE CONTRACTOR MUST VERIFY THE STYLE AND SIZE OF EXISTING SIGN TO BE REPLACED PRIOR TO ORDERING NEW SIGNS. NEW SIGNS SHALL BE ADB AIRFIELD SOLUTIONS OR APPROVED EQUAL. NEW SIGNS SHALL BE THE SAME STYLE AS THE REPLACED SIGNS.
2. REFER TO SHEETS E-102, E-103, AND E-106 FOR SIGN LOCATIONS.
3. REFER TO E-504 FOR SIGN DETAILS.

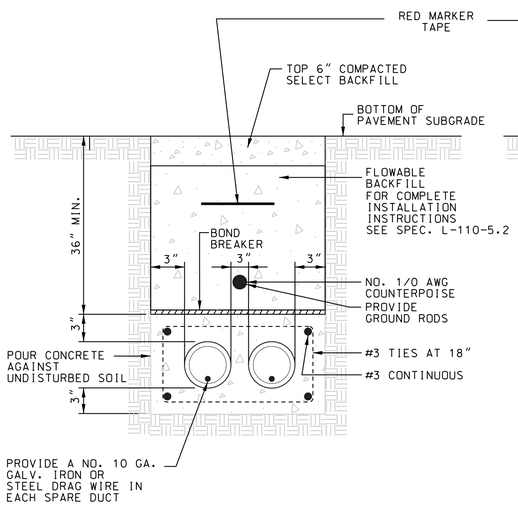

2 DUCTS

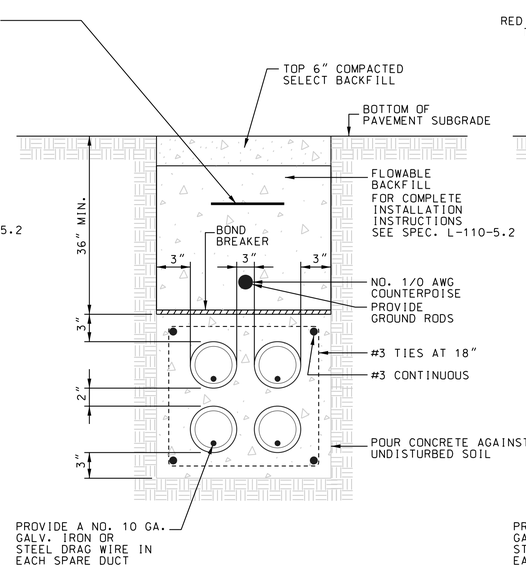

4 DUCTS

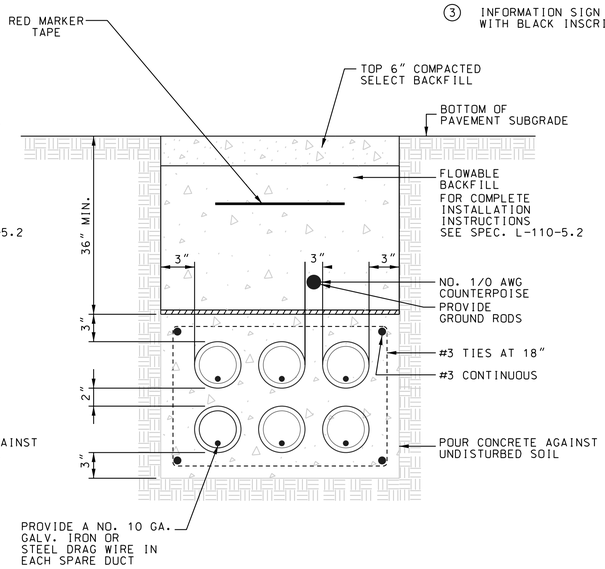

6 DUCTS

3 / E-501 TYPICAL DUCT BANK DETAIL

NO SCALE

GENERAL NOTES:

1. ALL CONCRETE SHALL HAVE MINIMUM ULTIMATE COMPRESSIVE STRENGTH OF 3000 PSI AT 28 DAYS.
2. DIMENSIONS RELATING TO REINFORCING STEEL ARE TO CENTER OF BARS.
3. ALL REINFORCING STEEL SHALL MEET A.S.T.M. SPECIFICATION A615 GRADE60, BILLET STEEL, INTERMEDIATE GRADE, AND A.S.T.M. SPECIFICATION A305-65 MINIMUM REQUIREMENTS FOR DEFORMED STEEL BARS.
4. ALL EXPOSED CORNERS SHALL BE CHAMFERED 3/4 INCH UNLESS OTHERWISE SPECIFIED.
5. WHERE BAR SPLICES ARE REQUIRED, A MINIMUM OF 33 DIAMETER LAPS SHALL BE USED.
6. 4-INCH GRAVEL BASE UNDER FOOTING MAT SHALL CONFORM TO TEXAS HIGHWAY DEPARTMENT ITEM NO. 248, "FLEXIBLE BASE", TYPE B, GRADE 3.
7. COMMUNICATIONS AND ELECTRICAL DUCT SPACING BETWEEN DUCTS SHALL COMPLY WITH NATIONAL ELECTRICAL SAFETY CODE AND NATIONAL ELECTRICAL CODE.
8. A 1/0 AWG BARE COPPER STRANDED GUARD WIRE SHALL BE PROVIDED FOR ALL BURIED CABLES AND CONDUCTORS NOT ROUTED IN FERROUS CONDUIT. THE GUARD WIRE SHALL BE EMBEDDED IN THE SOIL, A MINIMUM OF 10 INCHES (25 CM) ABOVE THE CABLE TO BE PROTECTED AND LOCATED DIRECTLY ABOVE AND PARALLEL TO THE LINES OR CABLES BEING PROTECTED. WHEN THE WIDTH OF THE CABLE RUN OR DUCT DOES NOT EXCEED 3 FT (90 CM), ONE GUARD WIRE, CENTERED OVER THE CABLE RUN OR DUCT, SHALL BE INSTALLED. WHEN THE CABLE RUN OR DUCT IS MORE THAN 3 FEET (90 CM) IN WIDTH, TWO GUARD WIRES SHALL BE INSTALLED. THE GUARD WIRES SHALL BE SPACED AT LEAST 12 INCHES (30 CM) APART AND BE NOT LESS THAN 12 INCHES (30 CM) NOR MORE THAN 18 INCHES (45 CM) INSIDE THE OUTERMOST WIRES OR THE EDGES OF THE DUCT. THE GUARD WIRE SHALL BE BONDED TO THE EES AT EACH END AND TO GROUND RODS AT APPROXIMATELY 90-FOOT INTERVALS USING EXOTHERMIC WELDS. THE SPACING BETWEEN GROUND RODS MUST VARY BY 10% TO 20% TO PREVENT RESONANCE. INSTALL THE GROUND RODS AT APPROXIMATELY 6 FEET (2 M) ON EITHER SIDE OF THE TRENCH. WHERE CABLES RUN PARALLEL TO THE EDGE OF A RUNWAY, THEY SHALL BE LOCATED 10 FEET FROM THE EDGE LIGHTS ON THE OUTSIDE OF THE LIGHTS.
9. CONTRACTOR SHALL USE SPACERS WIRED IN PLACE HORIZONTALLY TO MAINTAIN 3-INCH SPACING.

No.	Revision	By	App.	Date
	ISSUE FOR BID			01-25-13

ISSUE FOR BID

SAN ANTONIO AIRPORT SYSTEM

K. M. NG & ASSOCIATES, INC.
CONSULTING ENGINEERS
SAN ANTONIO, TEXAS 78201
TEXAS REGISTERED ENGINEERING FIRM F-442

AECOM
TEXAS REGISTERED ENGINEERING FIRM F-3580
5757 Woodway Drive
Suite 101 West
Houston, Texas 77057
Tel: 713.267.3200
Fax: 713.267.3278

12/5/12
STATE OF TEXAS
PAULUS B. MULJADI
81515
REGISTERED PROFESSIONAL ENGINEER

Designed By:	R. Wilson
Drawn By:	E. Chavez
Checked By:	P. Muljadi
Date:	12/10/2012
Scale:	AS SHOWN

SAN ANTONIO INTERNATIONAL AIRPORT
RUNWAY 3-21 EXTENSION - NEW EXIT TAXIWAY, TAXIWAY REPAIRS, AND PERIMETER RD RECONSTRUCTION - RE-BID

ELECTRICAL DETAILS I

Project No. 33-00160 | C.I.P. No. 0000 | A.I.P. No. 0000 | Sheet E-501

I:\Projects\Active\36_DMWI\210.03\RET-SAT-RWY321-E-501.dgn
12/5/2012 11:12:59 AM
noleman

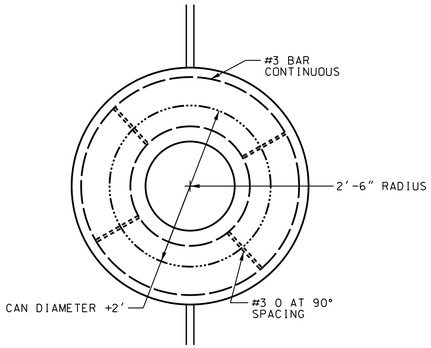

BASE MOUNTED LIGHT FIXTURE
SKIRT DETAIL-PLAN VIEW

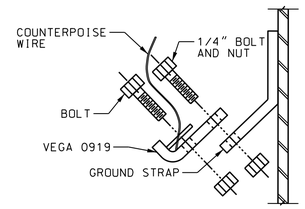

INSERT A

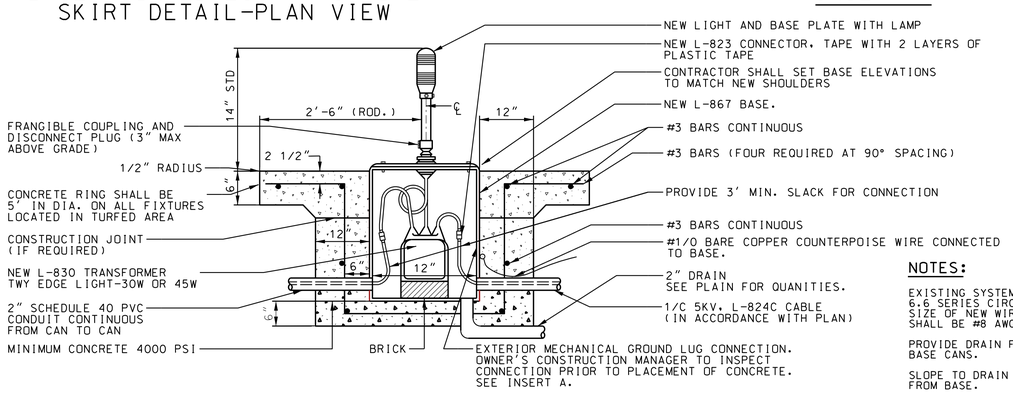

NOTES:

EXISTING SYSTEM IS 6.6 SERIES CIRCUIT SIZE OF NEW WIRE SHALL BE #8 AWG.

PROVIDE DRAIN FOR BASE CANS.

SLOPE TO DRAIN AWAY FROM BASE.

BREAKING-POINT FRANGIBLE COUPLING SHOULD BE LOCATED 3 INCHES MAXIMUM ABOVE GRADE.

1 E-502 TYPICAL BASE MOUNTED EDGE LIGHT (TYPE A)

NO SCALE

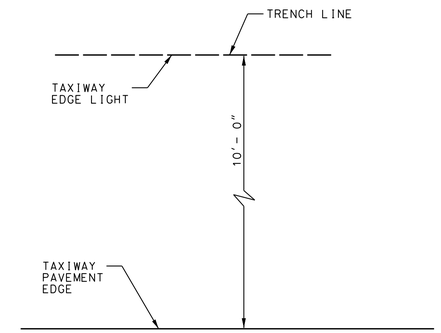

2 E-502 TYPICAL TAXIWAY EDGE LIGHT CLEARANCES (TYPE A)

NO SCALE

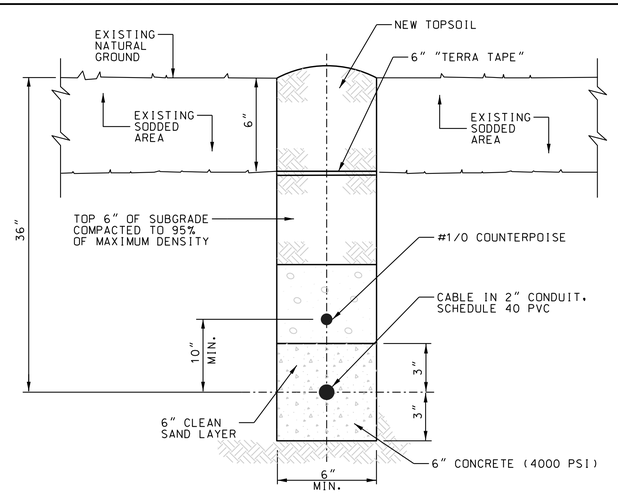

3 E-502 TYPICAL TRENCH DETAIL (NEW LIGHTING CIRCUIT)

NO SCALE

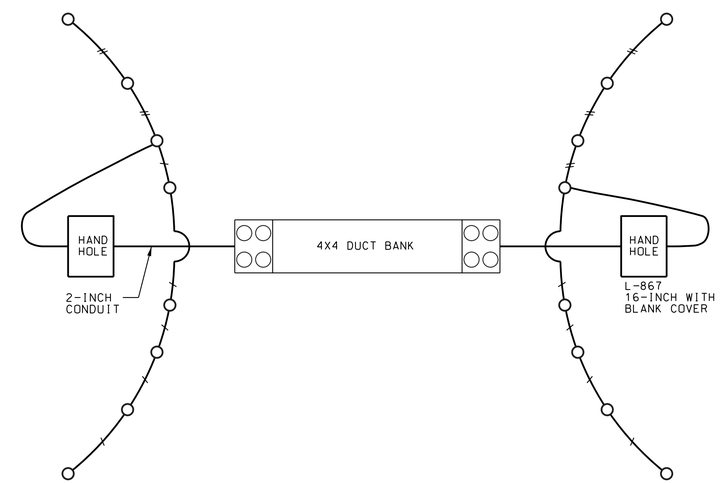

4 E-502 DETAIL FOR HAND HOLE AT DUCT CROSSING (TYPE A)

NO SCALE

GENERAL NOTE:

1. A 1/0 AWG BARE COPPER STRANDED GUARD WIRE SHALL BE PROVIDED FOR ALL BURIED CABLES AND CONDUCTORS NOT ROUTED IN FERROUS CONDUIT. THE GUARD WIRE SHALL BE EMBEDDED IN THE SOIL. A MINIMUM OF 10 INCHES (25 CM) ABOVE THE CABLE TO BE PROTECTED AND LOCATED DIRECTLY ABOVE AND PARALLEL TO THE LINES OR CABLES BEING PROTECTED. WHEN THE WIDTH OF THE CABLE RUN OR DUCT DOES NOT EXCEED 3 FT (90 CM), ONE GUARD WIRE, CENTERED OVER THE CABLE RUN OR DUCT, SHALL BE INSTALLED. WHEN THE CABLE RUN OR DUCT IS MORE THAN 3 FEET (90 CM) IN WIDTH, TWO GUARD WIRES SHALL BE INSTALLED. THE GUARD WIRES SHALL BE SPACED AT LEAST 12 INCHES (30 CM) APART AND BE NOT LESS THAN 12 INCHES (30 CM) NOR MORE THAN 18 INCHES (45 CM) INSIDE THE OUTERMOST WIRES OR THE EDGES OF THE DUCT. THE GUARD WIRE SHALL BE BONDED TO THE EES AT EACH END AND TO GROUND RODS AT APPROXIMATELY 90-FOOT INTERVALS USING EXOTHERMIC WELDS. THE SPACING BETWEEN GROUND RODS MUST VARY BY 10% TO 20% TO PREVENT RESONANCE. INSTALL THE GROUND RODS AT APPROXIMATELY 6 FEET (2 M) ON EITHER SIDE OF THE TRENCH. WHERE CABLES RUN PARALLEL TO THE EDGE OF A RUNWAY, THEY SHALL BE LOCATED 10 FEET FROM THE EDGE LIGHTS ON THE OUTSIDE OF THE LIGHTS.

No.	Revision	By	App.	Date
	ISSUE FOR BID			01-25-13

ISSUE FOR BID

SAN ANTONIO AIRPORT SYSTEM

K. M. NG & ASSOCIATES, INC.
CONSULTING ENGINEERS
SAN ANTONIO, TEXAS 78201
TEXAS REGISTERED ENGINEERING FIRM F-442

AECOM
TEXAS REGISTERED ENGINEERING FIRM F-3082
5757 Woodway Drive
Suite 101 West
Houston, Texas 77057
Tel: 713.267.3200
Fax: 713.267.3278

12/5/12
STATE OF TEXAS
PAULUS B. MULJADI
81515
REGISTERED
PROFESSIONAL ENGINEER

Designed By:	R. Wilson
Drawn By:	E. Chavez
Checked By:	P. Muljadi
Date:	12/10/2012
Scale:	AS SHOWN

SAN ANTONIO INTERNATIONAL AIRPORT
RUNWAY 3-21 EXTENSION - NEW EXIT TAXIWAY, TAXIWAY REPAIRS, AND PERIMETER RD RECONSTRUCTION - RE-BID

ELECTRICAL DETAILS II

Project No. 33-00160 | C.I.P. No. 0000 | A.I.P. No. 0000 | Sheet E-502

nglemon 12/5/2012 11:13:04 AM I:\Projects\Active\36_DM_MX\210.03\RET-SAT-RWY321-E-502.dgn

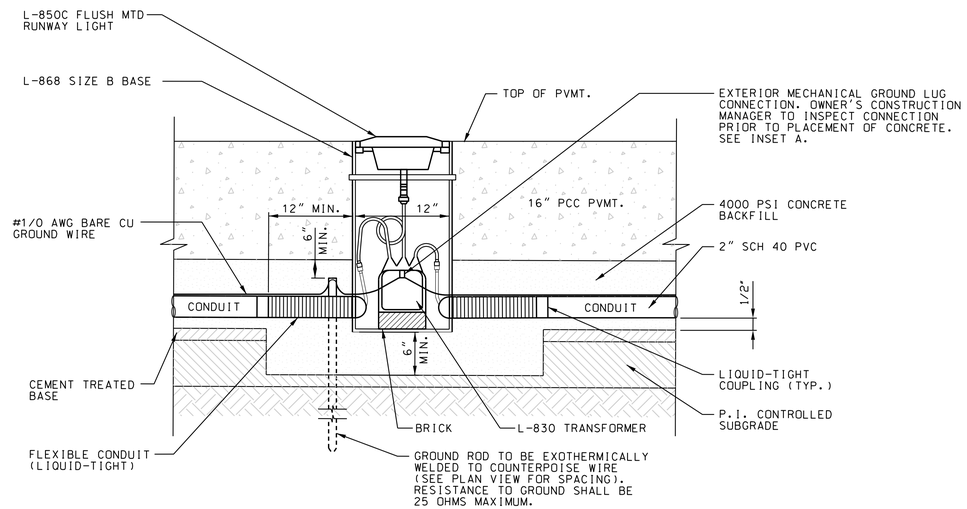

1 / E-503 TYPICAL (INSET) FLUSH-MOUNTED RWY IN PAVEMENT LIGHT (TYPE B)

NO SCALE

GENERAL NOTES:

1. A 1/0 AWG BARE COPPER STRANDED GUARD WIRE SHALL BE PROVIDED FOR ALL BURIED CABLES AND CONDUCTORS NOT ROUTED IN FERROUS CONDUIT. THE GUARD WIRE SHALL BE EMBEDDED IN THE SOIL, A MINIMUM OF 10 INCHES (25 CM) ABOVE THE CABLE TO BE PROTECTED AND LOCATED DIRECTLY ABOVE AND PARALLEL TO THE LINES OR CABLES BEING PROTECTED. WHEN THE WIDTH OF THE CABLE RUN OR DUCT DOES NOT EXCEED 3 FT (90 CM), ONE GUARD WIRE, CENTERED OVER THE CABLE RUN OR DUCT, SHALL BE INSTALLED. WHEN THE CABLE RUN OR DUCT IS MORE THAN 3 FEET (90 CM) IN WIDTH, TWO GUARD WIRES SHALL BE INSTALLED. THE GUARD WIRES SHALL BE SPACED AT LEAST 12 INCHES (30 CM) APART AND BE NOT LESS THAN 12 INCHES (30 CM) NOR MORE THAN 18 INCHES (45 CM) INSIDE THE OUTERMOST WIRES OR THE EDGES OF THE DUCT. THE GUARD WIRE SHALL BE BONDED TO THE EES AT EACH END AND TO GROUND RODS AT APPROXIMATELY 90-FOOT INTERVALS USING EXOTHERMIC WELDS. THE SPACING BETWEEN GROUND RODS MUST VARY BY 10% TO 20% TO PREVENT RESONANCE. INSTALL THE GROUND RODS AT APPROXIMATELY 6 FEET (2 M) ON EITHER SIDE OF THE TRENCH. WHERE CABLES RUN PARALLEL TO THE EDGE OF A RUNWAY, THEY SHALL BE LOCATED 10 FEET FROM THE EDGE LIGHTS ON THE OUTSIDE OF THE LIGHTS.
2. FOR CONDUIT BURIAL DEPTHS, REFER TO PAVEMENT DETAILS IN CIVIL DRAWINGS (C-400 SERIES) FOR EXACT DIMENSIONS.
3. WHERE LIGHTING CIRCUITS ARE INSTALLED IN A STRING OF TAXIWAY EDGE LIGHTS OR RUNWAY LIGHTS, THE DEPTH SHALL BE DECREASED AS REQUIRED TO CORRESPOND TO DETAIL 1 ABOVE. WHERE LIGHTS CIRCUITS ARE NOT RUN IN THIS MANNER, THE CIRCUITS SHALL BE INSTALLED AT A GREATER DEPTH AS SHOWN IN DETAIL 2.

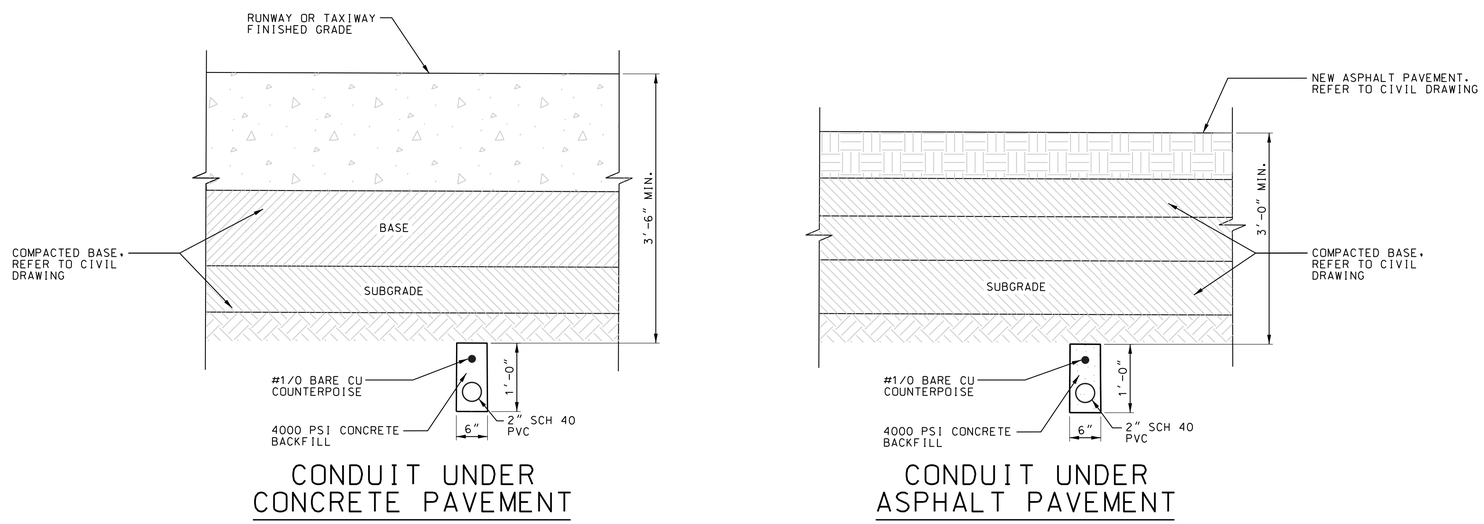

2 / E-503 TYPICAL LIGHTING SYSTEM UNDER PAVEMENT

NO SCALE

No.	Revision	By	App.	Date
	ISSUE FOR BID			01-25-13

ISSUE FOR BID

SAN ANTONIO AIRPORT SYSTEM

K. M. NG & ASSOCIATES, INC.
CONSULTING ENGINEERS
SAN ANTONIO, TEXAS 78201
TEXAS REGISTERED ENGINEERING FIRM F-442

AECOM
TEXAS REGISTERED ENGINEERING FIRM F-3082
5757 Woodway Drive
Suite 101 West
Houston, Texas 77057
Tel: 713.267.3200
Fax: 713.267.3278

12/5/12
STATE OF TEXAS
PAULUS B. MULJADI
81515
REGISTERED PROFESSIONAL ENGINEER

Designed By:	R. Wilson
Drawn By:	E. Chavez
Checked By:	P. Muljadi
Date:	12/10/2012
Scale:	AS SHOWN

SAN ANTONIO INTERNATIONAL AIRPORT
RUNWAY 3-21 EXTENSION - NEW EXIT TAXIWAY, TAXIWAY REPAIRS, AND PERIMETER RD RECONSTRUCTION - RE-BID

ELECTRICAL DETAILS III

Project No. 33-00160 | C.I.P. No. 0000 | A.I.P. No. 0000 | Sheet E-503

nolaman 12/5/2012 11:13:08 AM I:\Projects\Active\36_DMJM\210.03\RET-SAT-RWY321-E-503.dgn

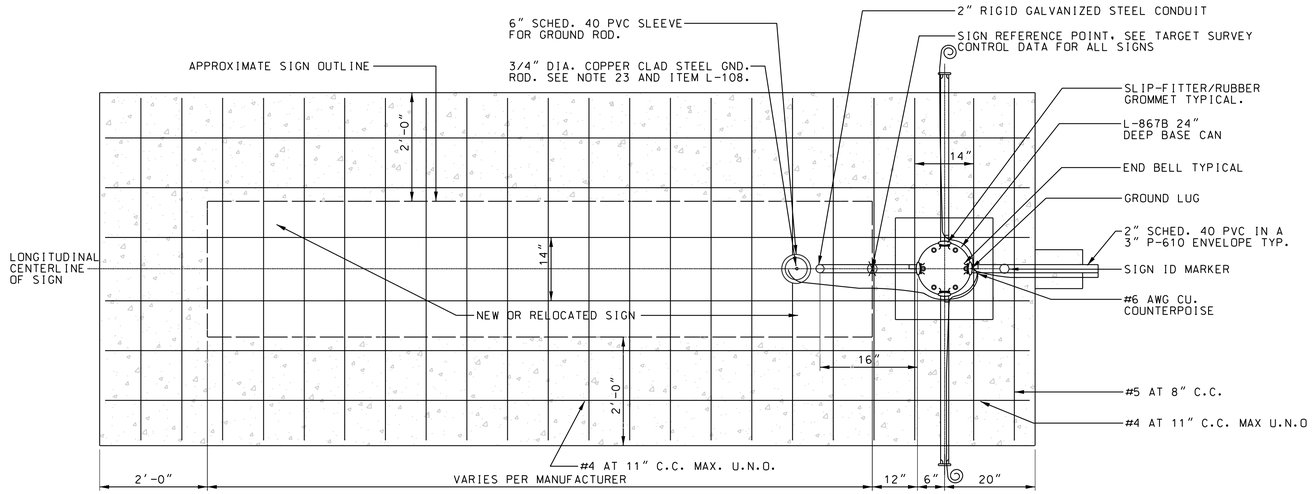

PLAN VIEW

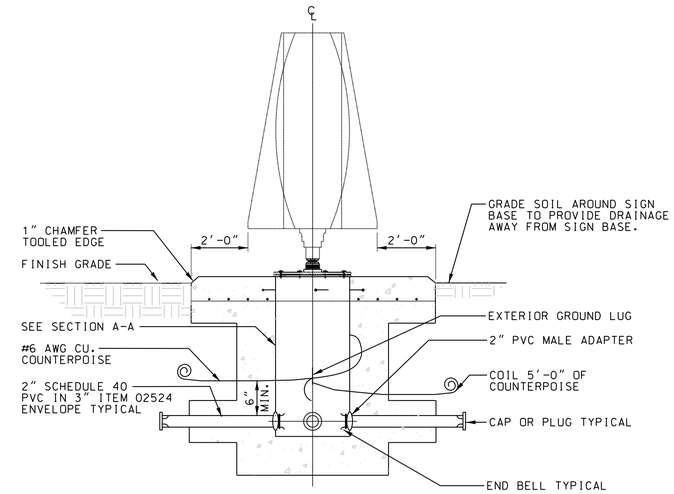

SIDE ELEVATION

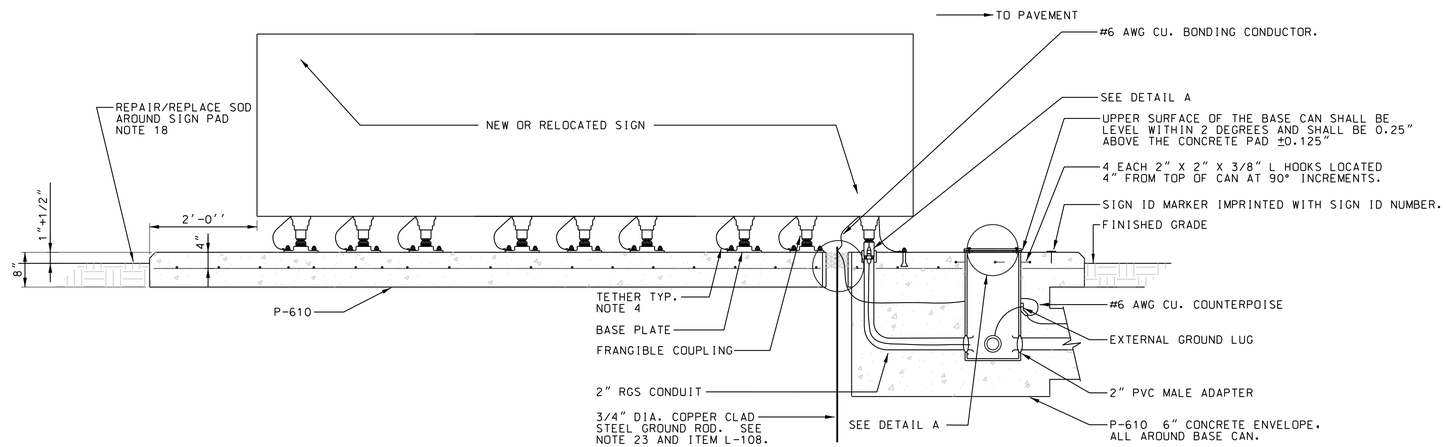

FRONT ELEVATION

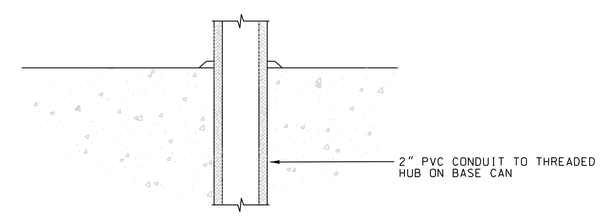

1 GUIDANCE SIGN
E-504

NO SCALE

2 DETAIL "A"
E-504

NO SCALE

NOTES:

1. MODIFICATIONS TO EXISTING SIGNS SHALL CONFORM TO AC 150/5340-18C, CHANGE 1, 150/5345-44F AND SIGNAGE AND MARKING SUPPLEMENTS. ALL MATERIALS, SIGN BASE DETAILS, ETC., SHALL BE SUBMITTED TO THE ENGINEER FOR APPROVAL. NEW SIGN PANELS SHALL BE FURNISHED BY THE MANUFACTURER OF THE SIGN IN WHICH THE NEW PANELS ARE TO BE INSTALLED.

2. THE DETAILS SHOWN IN THE PLANS PROVIDE THE MINIMUM REQUIREMENTS FOR SIGN INSTALLATIONS. THE CONTRACTOR SHALL USE STANDARDS APPLICABLE FOR THE PARTICULAR SIGN MANUFACTURER. THE BOLTING PATTERN, METHOD OF ANCHORING, ETC., SHALL BE PER SIGN MANUFACTURER'S RECOMMENDATIONS AND APPROVED BY THE ENGINEER.

3. THE SIGN SHALL WITHSTAND 200 MPH WIND LOAD PER AC 150/5345-44F WITHOUT DAMAGE. THE SIGN SHALL NOT BREAK AT THE FRANGIBLE POINTS NOR SUFFER PERMANENT DISTORTION. THE SIGN MANUFACTURER SHALL SUBMIT TO THE ENGINEER MOUNTING METHODS, AND THE CALCULATIONS OR TEST RESULTS SUPPORTING THE ABOVE REQUIREMENT. THE SIGNS SHALL BE FRANGIBLE, MEETING THE REQUIREMENTS OF AC 150/5345-44F.

4. ALL SIGNS SHALL BE FURNISHED WITH TETHERS ON EACH LEG. TETHERS SHALL BE 3/16" STAINLESS STEEL AIRCRAFT CABLE WITH A FORMED EYE ON BOTH ENDS. THE TETHER EYE SHALL BE ATTACHED TO THE SIGN AND BASE BY BEING SANDWICHED BETWEEN TWO STAINLESS STEEL FENDER WASHERS, WITH A 1/2" MINIMUM STAINLESS STEEL BOLT. THE TETHER SHALL BE OF SUFFICIENT LENGTH TO HAVE A MINIMUM OF 6" OF SLACK WHEN ATTACHED BETWEEN THE SIGN AND THE SIGN BASE. THE TETHERS AND BONDING CONDUCTORS SHALL BE OF SUFFICIENT LENGTH TO ALLOW THE FRANGIBLE COUPLINGS TO OPERATE WITHOUT RESTRICTIONS AND TO ALLOW THE POWER CABLE TO DISCONNECT IF THE SIGN FALLS OVER.

5. SIGNS SHALL BE WELL SEALED AGAINST INFILTRATION BY WATER AND DIRT.

6. THE CONCRETE SHALL COMPLY WITH ITEM 02524 SPECIFICATION.

7. ITEM 02524 CONCRETE STEEL REINFORCEMENT SHALL BE TYPE ASTM A615 GRADE 60. ALL REINFORCEMENT SHALL HAVE A 2" MINIMUM CONCRETE COVER. REINFORCEMENTS MAY BE ADJUSTED TO MISS INTERFERENCES.

8. STRUCTURAL BACKFILL, FREE-DRAINING, AS APPROVED BY THE ENGINEER, SHALL BE PLACED IN HORIZONTAL LIFTS NOT TO EXCEED 4" IN LOOSE DEPTH, AND COMPACTED TO 95% MAXIMUM DENSITY AT ZERO TO 2% ABOVE OPTIMUM MOISTURE AS DETERMINED BY ASTM D698. SLOPE SHALL NOT EXCEED 33:1 WITHIN RUNWAY OR TAXIWAY SAFETY AREA, OR 4:1 OUTSIDE THE SAFETY AREA, WITHOUT WRITTEN PERMISSION OF THE ENGINEER. THE RUNWAY SAFETY AREA IS ANY AREA WITHIN 250 FEET OF THE RUNWAY CENTERLINE. THE TAXIWAY SAFETY AREA IS ANY AREA WITHIN 131 FEET OF THE TAXIWAY CENTERLINE. SEE ITEM P-152.

9. ALL AREAS FOR THE LEG FLANGE PLATES SHALL BE IN THE SAME PLANE. USING IMBEDDED CHANNEL AND SPRING NUTS ANCHOR SIGN TO THE CONCRETE PAD OR STAINLESS STEEL EXPANSION ANCHORS, WHEN USED ON EXISTING OR DRILLED INTO NEW CONCRETE PADS.

10. SODDING OF DISTURBED AREAS SHALL BE INCLUDED IN THE INDIVIDUAL SIGN PAY ITEM.

11. THE ORIENTATION, INSTALLATION, AND DEPTH OF THE 2" CONDUIT SHALL BE COORDINATED WITH THE PLANS. EXISTING SLEEVES MAY BE USED FOR ENTRY TO MANHOLES. IF NO SLEEVES ARE AVAILABLE SEE EXISTING MANHOLE/HANDHOLE CONDUIT ENTRY DETAIL.

12. ALL CONDUIT SHALL BE 2" SCHEDULE 40 PVC CONCRETE ENCASED, UNLESS NOTED OTHERWISE.

13. GROUND RODS SHALL BE 3/4 INCH DIAMETER, 10 FEET LONG, COPPER CLAD STEEL SECTIONAL RODS. EACH GROUND ROD SHALL BE INDIVIDUALLY TESTED PRIOR TO CONNECTION TO THE GROUND GRID OR COUNTERPOISE. EACH INDIVIDUAL ROD SHALL HAVE AN EARTH RESISTANCE OF 5 OHMS OR LESS. ADDITIONAL SECTIONS SHALL BE ADDED TO THE ROD TO ACHIEVE THE 5 OHM REQUIREMENT. SEE ITEM L-108.

14. THIS CONTRACTOR SHALL VERIFY THAT THE 6" SLEEVE IS LARGE ENOUGH TO ACCOMMODATE THE EXOTHERMIC CONNECTION MOLD. THE TOP OF THE GROUND ROD SHALL BE 1" ABOVE THE PAD ±1". THE GROUND ROD SHALL NOT BE DRIVEN AFTER THE EXOTHERMIC CONNECTION HAS BEEN MADE.

15. THE BONDING CONDUCTOR AND SIGN TETHER SHALL NOT BE ATTACHED AT THE SAME ANCHOR BOLT. AN APPROVED MECHANICAL OR COMPRESSION LUG SHALL BE USED TO CONNECT THE BONDING CONDUCTOR TO THE SIGN FLANGE AND SIGN.

16. NEW CABLE AND CONNECTORS SHALL BE INSTALLED BETWEEN THE EXISTING CIRCUIT AT THE LIGHT CAN/MANHOLE AND THE RELOCATED SIGN.

17. OLD SIGN FEEDS NOT USED SHALL BE REMOVED BACK TO THE LAST BASE CAN OR MANHOLE/HANDHOLE FROM WHICH THE SIGN IS FED.

No.	Revision	By	App.	Date
	ISSUE FOR BID			01-25-13

ISSUE FOR BID

SAN ANTONIO AIRPORT SYSTEM

K. M. NG & ASSOCIATES, INC.
CONSULTING ENGINEERS
SAN ANTONIO, TEXAS 78201
TEXAS REGISTERED ENGINEERING FIRM F-442

AECOM
TEXAS REGISTERED ENGINEERING FIRM F-3082
5757 Woodway Drive
Suite 101 West
Houston, Texas 77057
Tel: 713.267.3200
Fax: 713.267.3278

12/5/12
STATE OF TEXAS
PAULUS B. MULJADI
81515
REGISTERED PROFESSIONAL ENGINEER

Designed By:	R. Wilson
Drawn By:	E. Chavez
Checked By:	P. Muljadi
Date:	12/10/2012
Scale:	AS SHOWN

SAN ANTONIO INTERNATIONAL AIRPORT
RUNWAY 3-21 EXTENSION - NEW EXIT TAXIWAY, TAXIWAY REPAIRS, AND PERIMETER RD RECONSTRUCTION - RE-BID

ELECTRICAL DETAILS IV

Project No. 33-00160 | C.I.P. No. 0000 | A.I.P. No. 0000 | Sheet E-504

nolaman 12/5/2012 11:13:12 AM I:\Projects\Active\36_DMJM\210.03\RET-SAT-RWY321-E-504.dgn

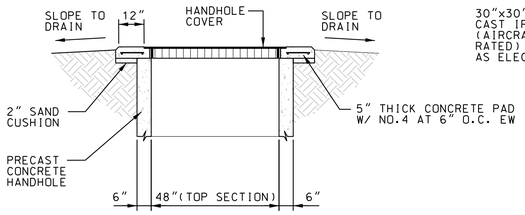

SECTION A-A

NOT TO SCALE

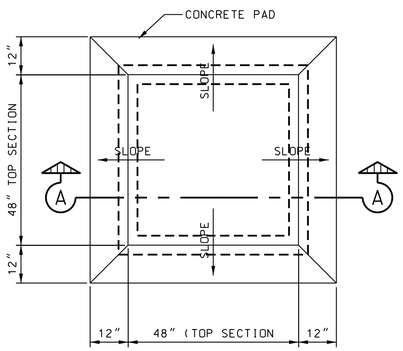

4' x 4' HANDHOLE PLAN

NOT TO SCALE

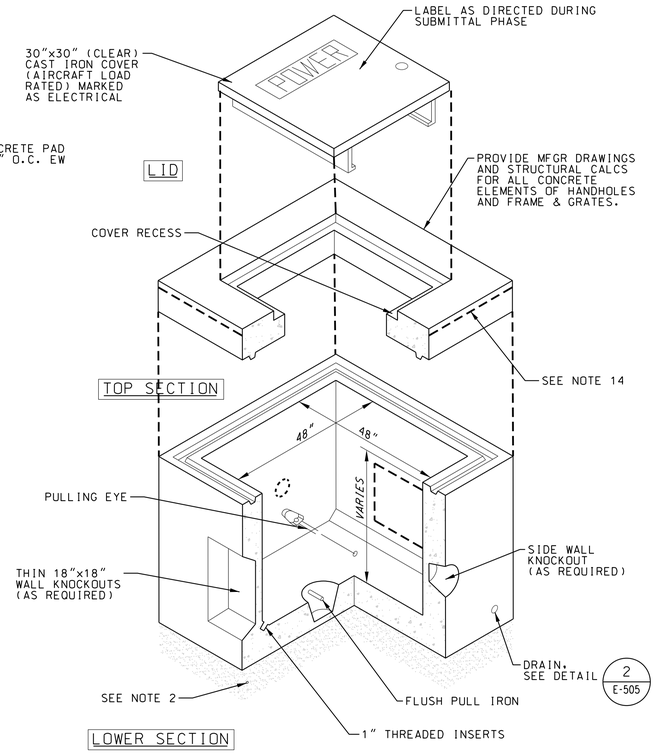

4' x 4' HANDHOLE

NOT TO SCALE

1 E-505 TYPICAL HANDHOLE AIRCRAFT RATED

NO SCALE

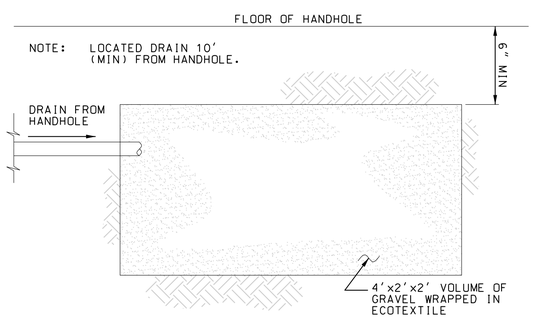

2 E-505 HANDHOLE DRAIN

NO SCALE

NOTES:

1. ALL HANDHOLE STRUCTURES TO BE CAST IN PLACE OR PRECAST.
2. ALL STRUCTURES SHALL BE PLACED ON A MINIMUM OF 6" CRUSHED AGGREGATE BASE.
3. CONCRETE SHALL BE IN ACCORDANCE WITH ITEM P-610 AND SHALL HAVE A MINIMUM COMPRESSIVE STRENGTH OF 4000 PSI AT 28 DAYS.
4. STEEL SHALL CONFORM TO ASTM 615 - GRADE 60. ALL STEEL OTHER THAN REBAR TO BE HOT DIPPED GALVANIZED AFTER FABRICATION.
5. DRAIN SHALL BE 3" SCHEDULE 40 PVC AND SHALL DRAIN FROM INTERIOR OF MANHOLE INTO NEAREST STORM SYSTEM AS SHOWN ON E5 SERIES.
6. EACH STRUCTURE SHALL HAVE A 3/4" X 10' COPPERCLAD GROUND ROD INSTALLED IN ONE CORNER OF THE FLOOR 1' FROM THE ADJACENT STRUCTURE WALLS.
7. A MINIMUM OF 4 - 4" SLEEVES SHALL BE PLACED IN EACH WALL OF MANHOLE/ HANDHOLE RECEIVING DUCT BANKS. A 2'X2' KNOCK-OUT SHALL BE PROVIDED IN EACH WALL OF THE MANHOLE OR HANDHOLE NOT RECEIVING DUCT BANKS IN THIS PROJECT FOR FUTURE ACCESS.
8. PULLING IRONS SHALL BE PLACED IN EACH WALL OPPOSITE DUCT BANKS.
9. THE CONTRACTOR SHALL COORDINATE THE EXACT LOCATION OF EACH STRUCTURE WITH THE E5 SERIES DRAWINGS AND SCHEDULE.
10. GROUT ALL CONDUIT PENETRATIONS.
11. GROUND ALL METALLIC PARTS OF THE MANHOLE/HANDHOLE WITH A #6 AWG B.H.D. COPPER WIRE. ALL GROUNDING AND TERMINATION METHODS SHALL BE SUBMITTED TO THE ENGINEER FOR REVIEW AND APPROVAL. T&B KOPR-KOTE OR APPROVED EQUAL SHALL BE USED ON ALL MECHANICAL CONNECTIONS.
12. ALL HANDHOLES SHALL BE PROVIDED WITH CABLE RACKS PULLING IRONS.
13. THE CONTRACTOR SHALL SUBMIT SHOP DRAWINGS SHOWING ALL REINFORCING STEEL AND OTHER CONSTRUCTION DETAILS PRIOR TO FABRICATION.
14. THE TOP OF THE MANHOLES/HANDHOLES SHALL BE 1" MIN. (+1" TOL) ABOVE THE FINISHED GRADE INCLUDING THE SOD OR TURF, EXCEPT WHEN INSTALLED IN PAVEMENT.
15. ALL MANHOLE COVERS SHALL HAVE SURFACE LETTERING AS FOLLOWS: "POWER".
16. AT LOCATIONS WHERE DUCT ENTERS MANHOLES IN THIS PROJECT, THE TERMINATORS SHALL BE CAST INTO THE MANHOLE WALLS. ALL CONDUIT OPENINGS TO BE GROUTED.
17. ALL LADDERS SHALL BE CONSTRUCTED TO COMPLY WITH MOST RECENT OSHA REGULATIONS.
18. INSTALL HANDHOLES PARALLEL TO ADJACENT RWY OR TWY. HANDHOLE DEPTHS SHALL BE 48" MAXIMUM DEPTH, EXCEPT ADJACENT TO PAVEMENT CROSSINGS WHERE EXTRA DEEP HANDHOLES MAY BE REQUIRED TO CLEAR UNDERDRAINS, ELECTRICAL CONDUITS, OR OTHER POTENTIAL ITEMS OF INTERFERENCE.
19. PROVIDE (2) SADDLE RACKS FOR EACH HANDHOLE SIDE, MANUFACTURED BY UNDERGROUND DEVICES, INC. MODEL NO. 2SR3N OR APPROVED EQUAL. INSTALL PER MANUFACTURER RECOMMENDATION.
20. PROVIDE (2) SADDLE RACKS FOR EACH HANDHOLE SIDE, MANUFACTURED BY UNDERGROUND DEVICES, INC. MODEL NO. 2SR3N OR APPROVED EQUAL. INSTALL PER MANUFACTURER RECOMMENDATION.
21. HANDHOLE SHALL CONFORM TO LATEST FAA, ASTM AND AASHTO SPECIFICATIONS. HANDHOLE SHALL BE 48" x 48" PRECAST CONCRETE (OLDCASTLE PRECAST, INC., MANSFIELD, TEXAS) WITH GALVANIZED AIRCRAFT RATED BOLT-DOWN FRAME WITH HINGE AND TORSIONED LOCKABLE DOOR ASSEMBLY (INWESCO, INC.-TEXAS, FORT WORTH, TEXAS).
22. DEPTH MAY VARY TO ACCOMMODATE DUCT/CONDUIT GRADING.
23. POWER AND CONTROL CABLES SHALL BE INSTALLED IN SEPARATE CONDUITS AND J-BOXES. ALL CABLE SPLICES SHALL BE PERFORMED BY EXPERIENCED, FAA-APPROVED, CERTIFIED CABLE SPLICERS AND APPROVED BY FAA REPRESENTATIVE OR RESIDENT ENGINEER.

No.	Revision	By	App.	Date
	ISSUE FOR BID			01-25-13

ISSUE FOR BID

SAN ANTONIO AIRPORT SYSTEM

K. M. NG & ASSOCIATES, INC.
CONSULTING ENGINEERS
SAN ANTONIO, TEXAS 78201
TEXAS REGISTERED ENGINEERING FIRM F-442

AECOM
TEXAS REGISTERED ENGINEERING FIRM F-3082
5757 Woodway Drive
Suite 101 West
Houston, Texas 77057
Tel: 713.267.3200
Fax: 713.267.3278

12/5/12
STATE OF TEXAS
PAULUS B. MULJADI
81515
REGISTERED PROFESSIONAL ENGINEER

Designed By:	R. Wilson
Drawn By:	E. Chavez
Checked By:	P. Muljadi
Date:	12/10/2012
Scale:	AS SHOWN

SAN ANTONIO INTERNATIONAL AIRPORT
RUNWAY 3-21 EXTENSION - NEW EXIT TAXIWAY, TAXIWAY REPAIRS, AND PERIMETER RD RECONSTRUCTION - RE-BID

ELECTRICAL DETAILS V

Project No.	33-00160	C.I.P. No.	0000	Sheet	E-505
		A.I.P. No.	0000		

noleman 12/5/2012 11:13:17 AM I:\Projects\Active\36_DMJM\1210.03\RET-SAT-RWY32\E-505.dgn