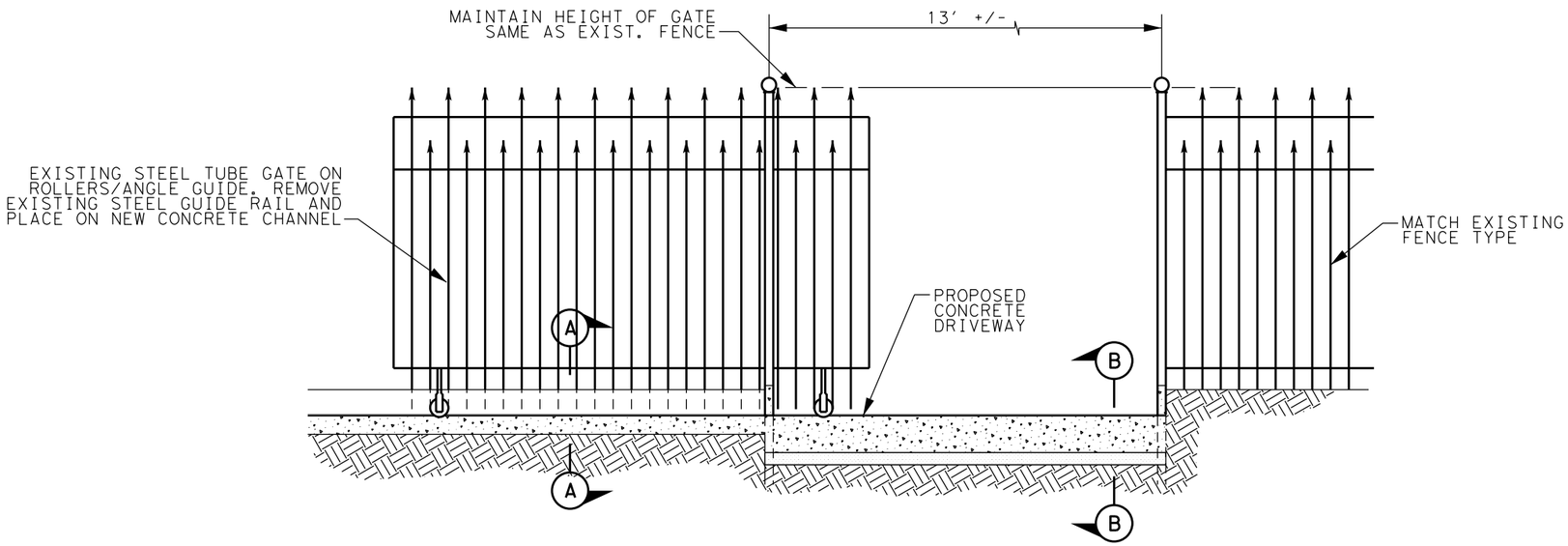

STEEL GATE DETAIL

N.T.S.

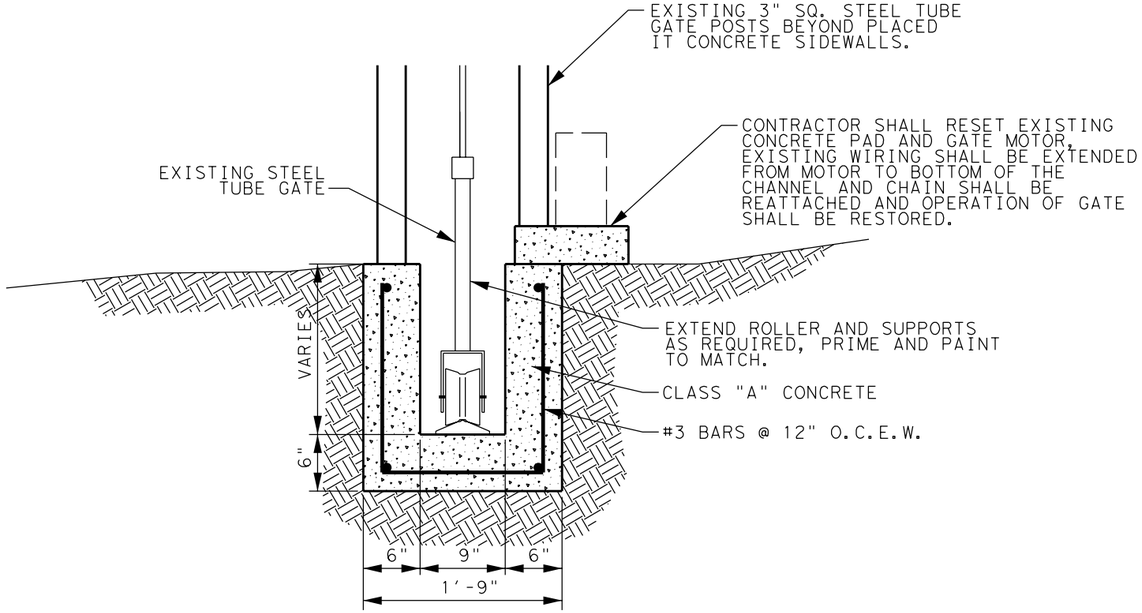

SECTION A-A

N.T.S.

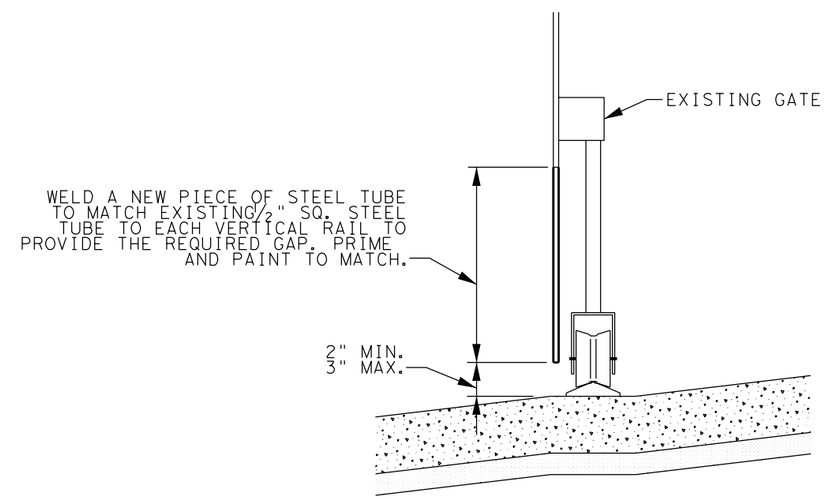

SECTION B-B

N.T.S.

NOTES:

1. EXISTING GATE/FENCE POSTS AND FENCE MAY BE REMOVED DURING CONSTRUCTION. THE FENCE SHALL BE SAWCUT AND THE EXISTING SECTION SHALL BE WELDED BACK INTO POSITION AND REPAINTED TO MATCH THE EXISTING COLOR. DAMAGED ITEMS SHALL NOT BE REUSED AND SHALL BE REPLACED WITH IDENTICAL MATERIALS.
2. ALL TREES WITHIN ADJACENT PROPERTY SHALL BE PROTECTED DURING CONSTRUCTION BY THE CONTRACTOR.

CITY OF SAN ANTONIO
CAPITAL IMPROVEMENTS MANAGEMENT SERVICES DEPARTMENT

WROUGHT IRON FENCE & ROLLING GATE DETAIL

	PROJECT NO.:		DATE: August 2012
DRWN. BY:	DSGN. BY:	CHKD. BY:	SHEET NO.: 1 OF 1