SAWS PROJECT NUMBER: 08-5555

SAN ANTONIO WATER SYSTEM

FT. SAM HOUSTON TRANSPORTATION PROJECT
SANITARY SEWER IMPROVEMENTS

100% SUBMITTAL
MARCH 8, 2011

STATE OF TEXAS
STACEY L. WEICHERT
84036
LICENSED
PROFESSIONAL ENGINEER
3-8-11

LOCKWOOD, ANDREWS AND NEWNAM, INC.
REGISTRATION NO: 2614

I:\160-10240-009\4-0-production\4-01-drawings\Plan Sheets\Sewer\90% Submittal\01-Sewer-CVR.dgn 3/8/2011 8:06:14 PM

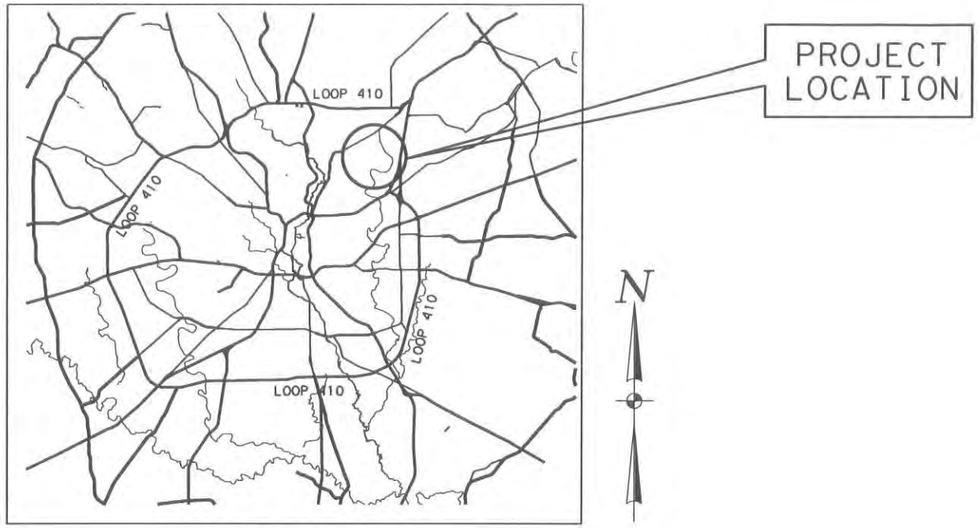

VICINITY MAP

NOT TO SCALE

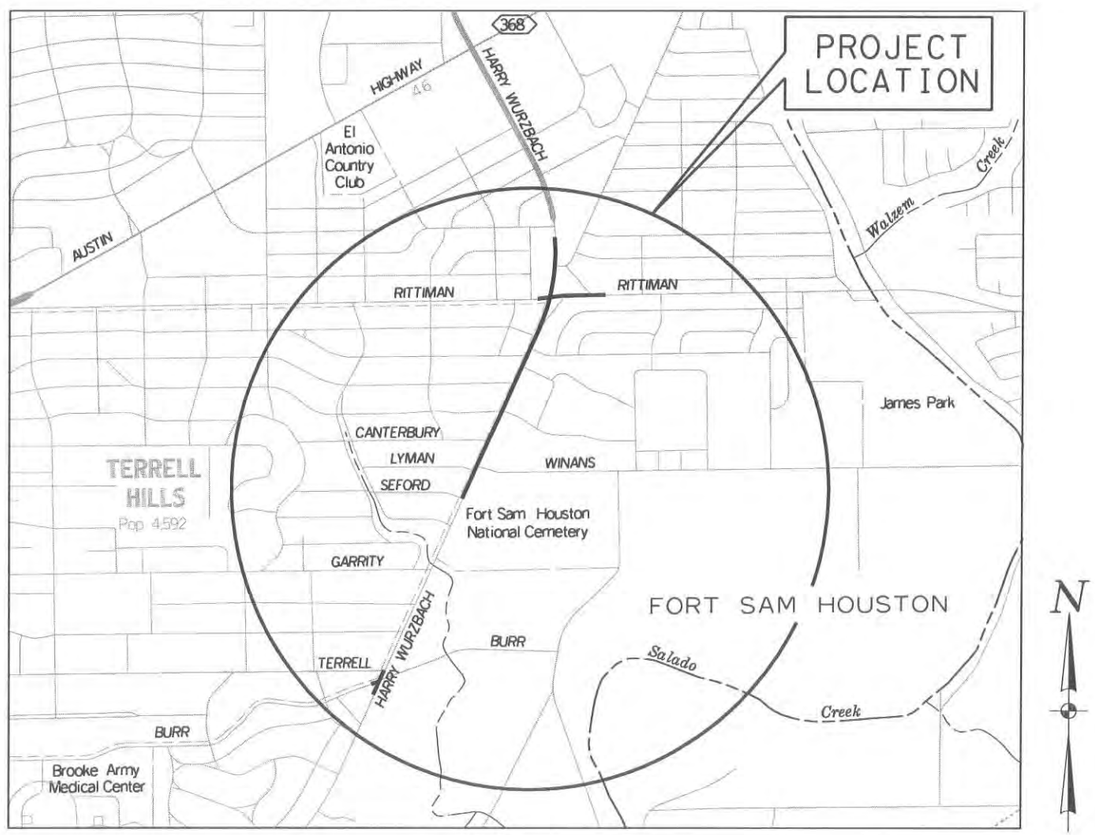

LOCATION MAP

SCALE: 1" = 2000'

SHEET INDEX

1	COVER SHEET
2	LOCATION MAP AND SHEET INDEX
3	KEY SHEET
4	GENERAL NOTES
5	HARRY WURZBACH AT BURR ADJUSTMENTS
6	HARRY WURZBACH AT WINANS ADJUSTMENTS
7-8	HARRY WURZBACH AT RITTIMAN ADJUSTMENTS
9-10	SANITARY SEWER PROFILES
11-12	DETAILS

ESTIMATED QUANTITIES

ITEM	DESCRIPTION	UNITS	QUANTITY
9500-XXXX	ADJUST EXISTING MANHOLE	EA	16
9500-XXXX	8" PVC SANITARY SEWER LINE (6'-10')	LF	78
9500-XXXX	8" PVC SANITARY SEWER LINE (10'-14')	LF	65
9500-XXXX	SANITARY SEWER DROP MANHOLE (0'-6')	EA	2
9500-XXXX	SANITARY SEWER MANHOLE (0'-6')	EA	4
9500-XXXX	EXTRA DEPTH MANHOLE (>6')	VF	11
9500-XXXX	SEWER MAIN TELEVISION INSPECTION	LF	1,043
9500-XXXX	SANITARY SEWER LATERAL	LF	180
9500-XXXX	SANITARY SEWER CLEAN OUT	EA	6
9500-XXXX	BYPASS PUMPING	LS	1
9500-XXXX	TRENCH COMPLETION CONDITION "B"	SY	93
9500-XXXX	TRENCH COMPLETION CONDITION "C"	SY	20

STATE OF TEXAS
STACEY L. WEICHERT
84036
LICENSED
PROFESSIONAL ENGINEER
5-6-11

Lockwood, Andrews & Newnam, Inc.
A LEO A DALY COMPANY
REGISTRATION NO: 2614

SAN ANTONIO WATER SYSTEM

FT. SAM HOUSTON
TRANSPORTATION PROJECT
LOCATION MAP
AND INDEX SHEET

SAWS JOB NO. 08-5555

©2011 Texas Department of Transportation

SHEET 2 OF 12

DESIGNED:	FED. RD. DIV. NO.	STATE	PROJECT NO.			HIGHWAY NO.
CHECKED:	6	TEXAS				HARRY WURZBACH
DRAWN:	STATE DIST.	COUNTY	CONTROL NO.	SECTION NO.	JOB NO.	SHEET NO.
CHECKED:	SAT	BEXAR				246

I:\160-10240-009\4-0-production\4-01-drawings\Plan Sheets\Sewer\90% Submittal\02-Sewer-MAP*INDEX.dgn 4/29/2011 2:50:25 PM

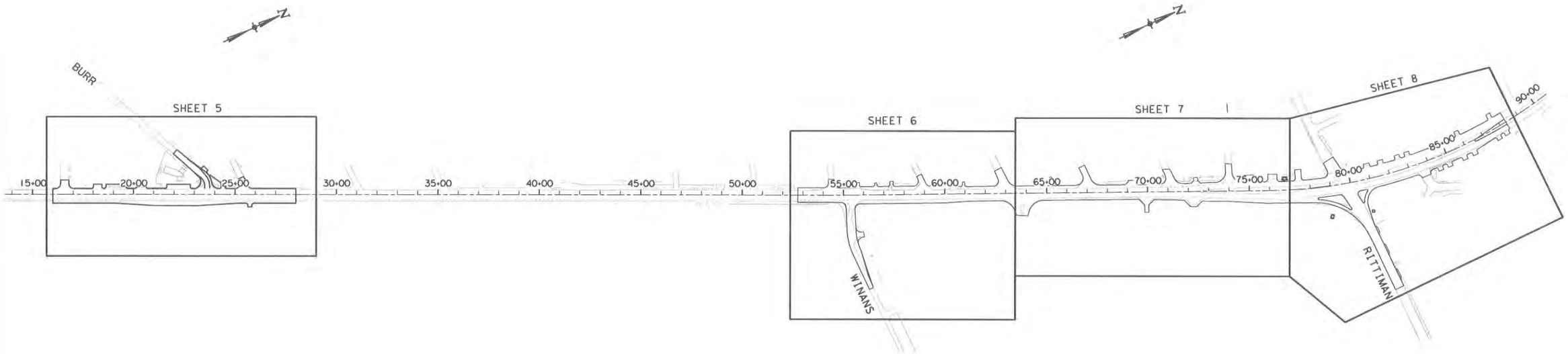

KEY MAP

GRAPHIC SCALE

0 500 1000

1" =1,000' (11 X 17)
1" =500' (FULL SIZE)

INFORMATION PROVIDED FOR REFERENCE ONLY - REFER TO PROJECT CONTROL SHEET IN ROADWAY PLANS FOR CONFIRMATION OF CONTROL AND ADDITIONAL DATUM/SCALE FACTOR INFORMATION

DATUM LISTED AS NAD83 (93) TX STATE PLAIN SO. CENTRAL ZONE (4204)

COORDINATES ARE SURFACE DERIVED BY MULTIPLYING GRID COORDINATES BY 1.00017

VERTICAL DATUM BASED ON NAVD88

GPS 1
SET ½" IRON ROD WITH ALUMINUM CAP STAMPED "COSA CTL 1"
N: 13728899.122
E: 2149588.679
ELEV: 727.00'

GPS 2
SET ½" IRON ROD WITH ALUMINUM CAP STAMPED "COSA CTL 2"
N: 13728548.879
E: 2149787.670
ELEV: 729.95'

GPS 3
SET ½" IRON ROD WITH ALUMINUM CAP STAMPED "COSA CTL 3"
N: 13719638.649
E: 2146886.212
ELEV: 729.91'

GPS 4
SET ½" IRON ROD WITH ALUMINUM CAP STAMPED "COSA CTL 4"
N: 13720002.905
E: 2147085.464
ELEV: 723.39'

PROJECT CONTROL

STATE OF TEXAS
STACEY L. WEICHERT
84036
LICENSED
PROFESSIONAL ENGINEER
5-6-11

Lockwood, Andrews & Newnam, Inc.
A LEO A DALY COMPANY
REGISTRATION NO: 2614

SAN ANTONIO WATER SYSTEM

FT. SAM HOUSTON TRANSPORTATION PROJECT

KEY SHEET

SAWS JOB NO. 08-5555

©2011 Texas Department of Transportation

SHEET 3 OF 12

DESIGNED:	FED. RD. DIV. NO.	STATE	PROJECT NO.			HIGHWAY NO.
CHECKED:	6	TEXAS				HARRY WURZBACH
DRAWN:	STATE DIST.	COUNTY	CONTROL NO.	SECTION NO.	JOB NO.	SHEET NO.
CHECKED:	SAT	BEXAR				247

I:\160-10240-009\4-0-production\4-01-drawings\Plan Sheets\Sewer\90% Submittal\03-Sewer-MAP#SHEETKEY.dgn 4/29/2011 2:50:27 PM

AT&T NOTE

THE EXISTENCE AND LOCATION OF UNDERGROUND CABLE INDICATED ON THE PLANS ARE TAKEN FROM THE BEST RECORDS AVAILABLE AND ARE NOT GUARANTEED TO BE ACCURATE. CONTRACTOR SHALL CONTACT THE TEXAS STATE WIDE ONE CALL LOCATOR NUMBER 1-800-344-8377 48 HOURS PRIOR TO EXCAVATION. CONTRACTOR IS TO PROTECT AND SUPPORT TELEPHONE COMPANY PLANT DURING CONSTRUCTION.

CPS NOTE

CALL THE TEXAS STATE WIDE ONE CALL LOCATOR NUMBER 1-800-344-8377, 48 HOURS BEFORE BEGINNING ANY EXCAVATION.

DUE TO FEDERAL REGULATIONS TITLE 49, PART 192-181, CPS MUST MAINTAIN ACCESS TO GAS VALVES AT ALL TIMES. THE CONTRACTOR MUST PROTECT AND WORK AROUND ANY GAS VALVES THAT ARE IN THE PROJECT AREA.

TRENCH EXCAVATION SAFETY PROTECTION

CONTRACTOR AND/OR CONTRACTOR'S INDEPENDENTLY RETAINED EMPLOYEE OR STRUCTURAL DESIGN/GEOTECHNICAL/SAFETY/EQUIPMENT CONSULTANT, IF ANY SHALL REVIEW THESE PLANS AND AVAILABLE GEOTECHNICAL INFORMATION AND THE ANTICIPATED INSTALLATION SITE(S) WITHIN THE PROJECT WORK AREA IN ORDER TO IMPLEMENT CONTRACTOR'S TRENCH EXCAVATION SAFETY SYSTEMS, PROGRAMS AND/OR PROCEDURES. THE CONTRACTOR'S IMPLEMENTATION OF THE SYSTEMS, PROGRAMS AND/OR EXCAVATION SAFETY PROTECTION WITH AS A MINIMUM OSHA STANDARDS FOR TRENCH EXCAVATIONS, SPECIFICALLY, CONTRTACTOR AND/OR CONTRACTOR'S INDEPENDENTLY RETAINED EMPLOYEE OF SAFETY CONSULTANT SHALL IMPLEMENT A TRENCH SAFETY PROGRAM IN ACCORDANCE WITH OSHA STANDARDS GOVERNING THE PRESENCE AND ACTIVITIES OF INDIVIDUALS WORKING IN AND AROUND TRENCH EXCAVATION.

SAWS GENERAL NOTES

1. All materials and construction procedures within the scope of this contract shall be approved by the San Antonio Water System (SAWS) and comply with the following as applicable:

   A. Current Texas Commission on Environmental Quality Design Criteria for Water Systems Chapter 290, Rules and Regulations for Public Water Systems.

   B. Current TXDOT "Standard Specifications for Construction of Highways, Streets and Drainage."

   C. Current "SAWS Standard Specifications for Construction."

   D. Current City of San Antonio (COSA) "Standard Specifications for Public Works Construction."

   E. Current COSA Tree Ordinance.

2. The Contractor is to notify and make arrangements with the SAWS Construction Inspection Division at 233-3500 and the involved home residents and /or property owners 48 hours prior to excavation.

3. The location and depths of existing utilities, including service laterals, shown on the plans are approximate only. Actual locations and depths must be field verified by the contractor 48 hours prior to construction and it shall be the Contractors responsibility to locate utility service lines as required for construction and to protect them during construction.

4. The contractor shall verify the exact location of underground utilities and drainage structures at least 48 hours prior to construction whether shown on plans or not, and to protect the same during construction.

COSA Drainage	207-8048
COSA Traffic Signal Operations	207-7720
Texas State Wide One Call Locator	1-800-545-6005
Bexar Metropolitan Water District	354-6536
SAWS Utility Relocations	233-2010
SAWS Production Control Center	233-2016
City Public Service (CPS)	1-800-344-8377

5. The Contractor shall be responsible for restoring to its original or better condition from damages done to existing fences, curbs, streets, driveways, sidewalks, landscaping and structures.

6. The Contractor shall avoid cutting roots larger that one inch in diameter when excavating near existing trees. Excavation in vicinity of trees shall proceed with caution. The Contractor shall contact the City Arborist at 207-8053 for guidance. SAWS Construction Inspector shall also be notified.

7. The Contractor shall not place any waste materials in the 100-year Flood Plain without first obtaining an approved Flood Plain Permit.

8. Prior to tie-ins, any shutdowns of existing water mains of any size must be coordinated with SAWS Inspection and/or SAWS Production groups at least one week in advance of the shutdown. The contractor must also provide a sequence of work as related to the tie-ins; this is at no Additional cost to SAWS or the project and it is the responsibility of the contractor to sequence the work accordingly.

9. Salvage fire hydrants that are being replaced and return them to SAWS storage (N.S.P.I.).

10. It shall be the contractor's responsibility to plan and coordinate his/her utility work with other utilities as necessary to assure all proposed utilities are installed in a logical and organized manor and sequenced as necessary to minimize disruptions in utility services to residential and commercial owners located within the project area. (N.S.P.I.)

GENERAL NOTES

1. ALL AREAS DISTURBED BY THE CONSTRUCTION SHALL BE RESTORED TO ORIGINAL OR BETTER CONDITION THAN AT THE START OF CONSTRUCTION. ALL REMOVED GATES, FENCES, IMPROVEMENTS, LANDSCAPING, ETC. SHALL BE REPLACED BY THE CONTRACTOR AT NO ADDITIONAL COST TO THE OWNER, UNLESS OTHERWISE STIPULATED IN THE CONSTRUCTION DOCUMENTS.

2. CONTRACTOR SHALL INCORPORATE THE USE OF A TRENCH BOX OR OTHER ACCEPTABLE SAFETY SYSTEM IN ANY TRENCH THAT EXCEEDS FIVE (5) FEET IN DEPTH. CONTRACTOR SHALL HAVE A TEXAS LICENSED PROFESSIONAL ENGINEER DESIGN THE TRENCH EXCAVATION PROTECTION SYSTEM (N.S.P.I.). CONTRACTOR AND/OR CONTRACTOR'S INDEPENDENTLY RETAINED EMPLOYEE OR SAFETY CONSULTANT SHALL IMPLEMENT A TRENCH SAFETY PROGRAM IN ACCORDANCE WITH OSHA STANDARDS GOVERNING THE PRESENCE AND ACTIVITIES OF INDIVIDUALS WORKING IN AND AROUND TRENCH EXCAVATION.

3. SAWS SHALL MACHINE CHLORINATE NEW WATER MAINS WHERE WATER MAIN LENGTHS ARE GREATER THAN 800 FT.

4. CONTRACTOR SHALL CHLORINATE NEW MAINS WITH HTH WHERE WATER MAINS LENGTHS ARE 800 FT OR LESS.

5. WHENEVER POWER/TEL. POLES ARE ADJACENT TO THE PROPOSED CONSTRUCTION, THE CONTRACTOR SHALL PROVIDE PROPER SHORING, BRACING, AND/OR OTHER SUITABLE SUPPORT FOR THE POLES DURING CONSTRUCTION. (N.S.P.I.)

6. CONTRACTOR TO PROVIDE PROPERTY OWNER ACCESS TO PROPERTY AT ALL TIMES.

7. MAINTAIN EXISTING DRAINAGE WHEN WORKING IN R.O.W.

8. CONTRACTOR SHALL VERIFY ALL TIE-INS PRIOR TO INITIATION OF CONSTRUCTION ON ASSOCIATED MAINS.

9. TRAFFIC CONTROL TO BE DIRECTED/PHASED AS INDICATED IN THE ROADWAY PLANS UNLESS OTHERWISE NOTED.

10. ASBESTOS CEMENT (AC) PIPE, ALSO KNOWN AS TRANSITE PIPE, AND WHICH IS KNOWN TO BE AN ASBESTOS-CONTAINING MATERIAL (ACM), IS LOCATED WITHIN THE PROJECT LIMITS. SPECIAL WASTE MANAGEMENT PROCEDURES AND HEALTH AND SAFETY REQUIREMENTS WILL BE APPLICABLE WHEN REMOVAL AND/OR DISTURBANCE OF THIS PIPE OCCUR. PAYMENT FOR SUCH WORK IS TO BE MADE UNDER SPECIAL SPECIFICATION FOR HANDLING AND DISPOSAL OF ASBESTOS CEMENT PIPE.

11. ALL RESTRAINT AND ANCHORAGE TO BE SUBSIDIARY TO THE PIPE (N.S.P.I.)

ABBREVIATIONS:

E.O.P.	EDGE OF PAVEMENT
G	GAS
N.T.S.	NOT TO SCALE
N.S.P.I.	NO SEPARATE PAY ITEM
OU	OVERHEAD UTILITY
P.P.	POWER POLE
SS	SANITARY SEWER
R.O.W.	RIGHT OF WAY
U.G.	UNDER GROUND

STATE OF TEXAS
STACEY L. WEICHERT
84036
LICENSED
PROFESSIONAL ENGINEER
5-6-11

Lockwood, Andrews & Newnam, Inc.
A LEO A DALY COMPANY
REGISTRATION NO: 2614

SAN ANTONIO WATER SYSTEM

FT. SAM HOUSTON TRANSPORTATION PROJECT

GENERAL NOTES

SAWS JOB NO. 08-5555

©2011 Texas Department of Transportation

SHEET 4 OF 12

DESIGNED:	FED. RD. DIV. NO.	STATE	PROJECT NO.			HIGHWAY NO.
CHECKED:	6	TEXAS				HARRY WURZBACH
DRAWN:	STATE DIST.	COUNTY	CONTROL NO.	SECTION NO.	JOB NO.	SHEET NO.
CHECKED:	SAT	BEXAR				248

I:\160-10240-009\4-0-production\4-01-drawings\Plan Sheets\Sewer\90% Submittal\04#GN#Water.dgn 4/29/2011 2:50:28 PM

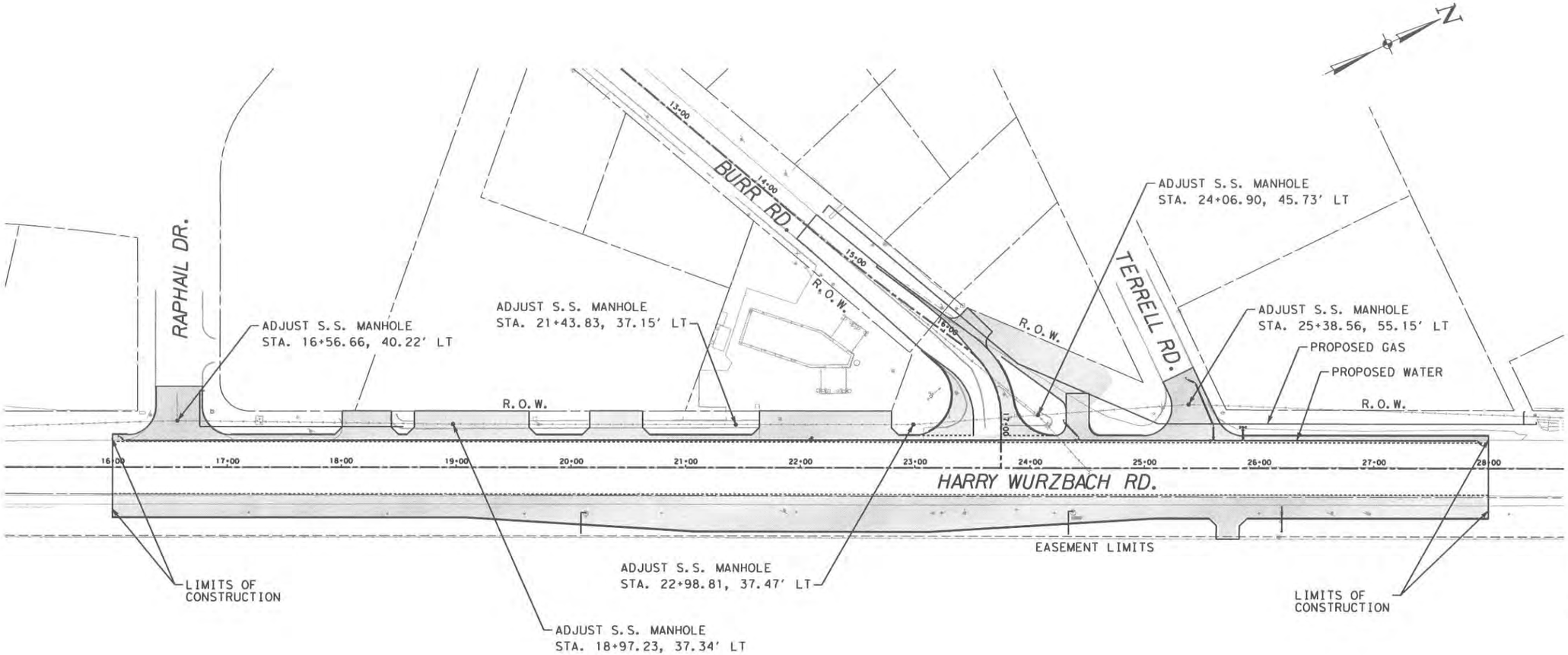

GRAPHIC SCALE

0' 50' 100'

1" = 100' (11 X 17)
1" = 50' (FULL SIZE)

STATE OF TEXAS
STACEY L. WEICHERT
84036
LICENSED
PROFESSIONAL ENGINEER
5-6-11

NOTE: ALL MANHOLES TO BE ADJUSTED TO MATCH FINAL FINISHED GRADE ELEVATION.

ESTIMATED QUANTITIES			
ITEM	DESCRIPTION	UNITS	QUANTITY
9500-XXXX	ADJUST EXISTING MANHOLES	EA	6

LEGEND

BY OTHERS — SAW CUT

RECONSTRUCTED ROADWAY

LEGEND

PROPOSED UTILITIES: (SOLID/BOLD)

SAN. SEWER/MANHOLE

EXISTING UTILITIES: (OPEN/SHADED)

WATER MAIN
GAS MAIN
SAN. SEWER/MANHOLE
STORM SEWER
OVERHEAD UTIL./POLE
FIBEROPTIC CABLE

Lockwood, Andrews & Newnam, Inc.
A LEO A DALY COMPANY
REGISTRATION NO: 2614

SAN ANTONIO WATER SYSTEM

FT. SAM HOUSTON TRANSPORTATION PROJECT

HARRY WURZBACH RD. AT BURR RD.

SAWS JOB NO. 08-5555

©2011 Texas Department of Transportation

SHEET 5 OF 12

DESIGNED:	FED. RD. DIV. NO.	STATE	PROJECT NO.			HIGHWAY NO.
CHECKED:	6	TEXAS				HARRY WURZBACH
DRAWN:	STATE DIST.	COUNTY	CONTROL NO.	SECTION NO.	JOB NO.	SHEET NO.
CHECKED:	SAT	BEXAR				249

I:\160-10240-009\4-0-production\4-01-drawings\Plan Sheets\Sewer\90% Submittal\05-manhole*loc01.dgn 4/29/2011 2:50:29 PM

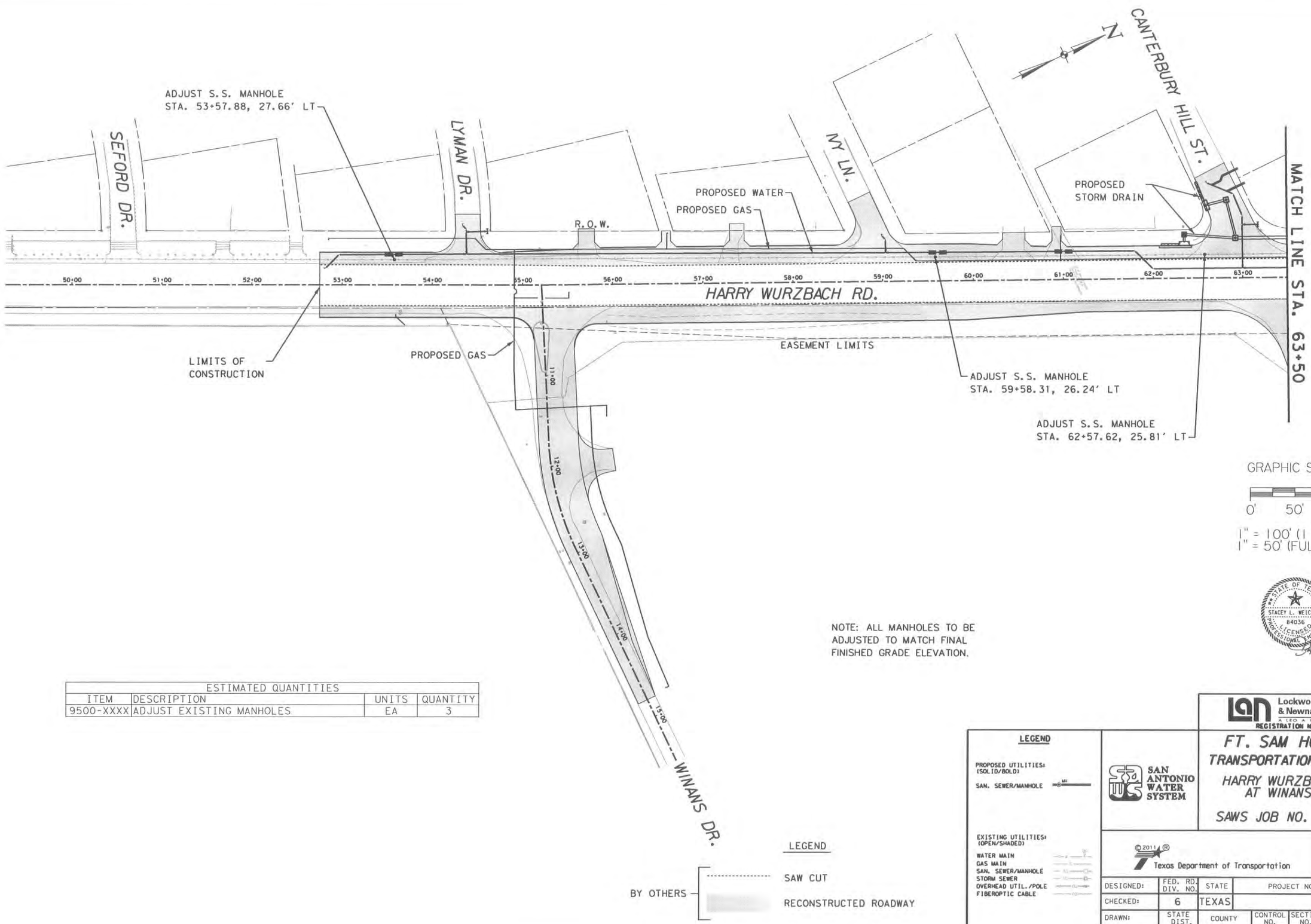

NOTE: ALL MANHOLES TO BE ADJUSTED TO MATCH FINAL FINISHED GRADE ELEVATION.

ESTIMATED QUANTITIES			
ITEM	DESCRIPTION	UNITS	QUANTITY
9500-XXXX	ADJUST EXISTING MANHOLES	EA	3

LEGEND

PROPOSED UTILITIES: (SOLID/BOLD)

SAN. SEWER/MANHOLE

EXISTING UTILITIES: (OPEN/SHADED)

WATER MAIN
GAS MAIN
SAN. SEWER/MANHOLE
STORM SEWER
OVERHEAD UTIL./POLE
FIBEROPTIC CABLE

Lockwood, Andrews & Newnam, Inc.
A LEO A DALY COMPANY
REGISTRATION NO: 2614

SAN ANTONIO WATER SYSTEM

FT. SAM HOUSTON TRANSPORTATION PROJECT

HARRY WURZBACH RD. AT WINANS RD.

SAWS JOB NO. 08-5555

©2011
Texas Department of Transportation

SHEET 6 OF 12

DESIGNED:	FED. RD. DIV. NO.	STATE	PROJECT NO.			HIGHWAY NO.
CHECKED:	6	TEXAS				HARRY WURZBACH
DRAWN:	STATE DIST.	COUNTY	CONTROL NO.	SECTION NO.	JOB NO.	SHEET NO.
CHECKED:	SAT	BEXAR				250

I:\160-10240-009\4-0-production\4-01-drawings\Plan Sheets\Sewer\90% Submittal\06-manhole*loc02.dgn 4/29/2011 2:50:30 PM

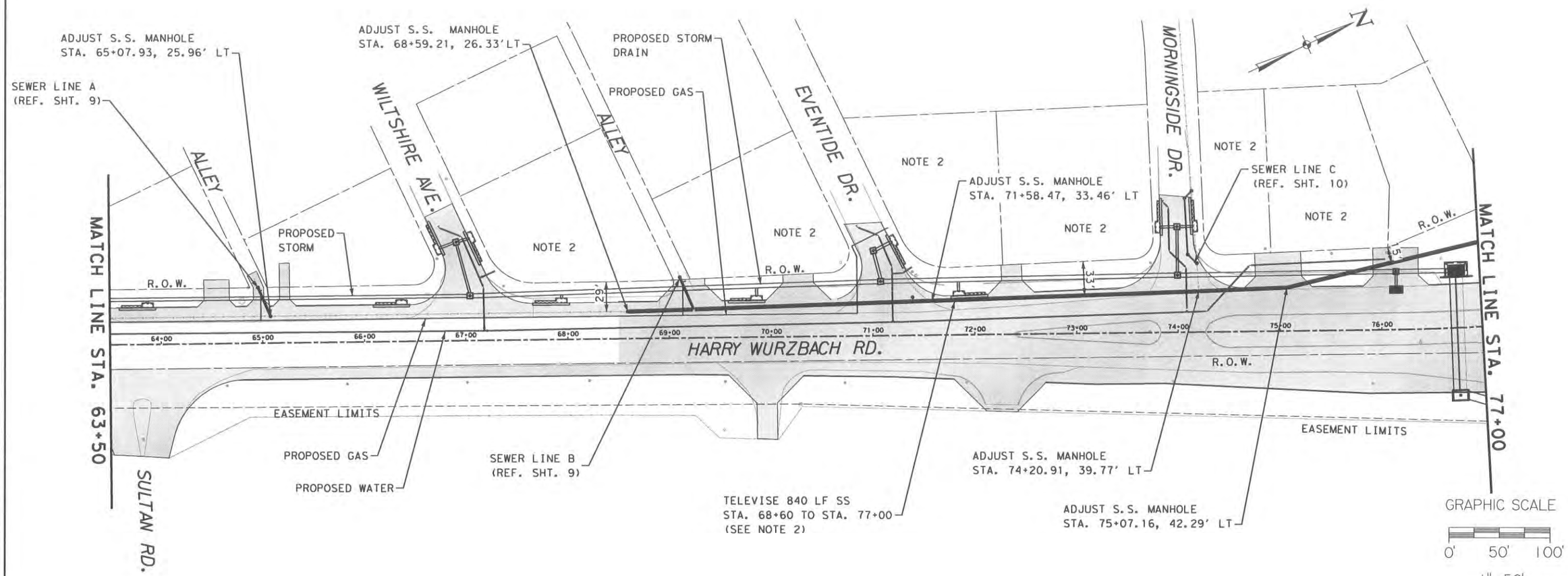

NOTE(S):

1. ALL MANHOLES TO BE ADJUSTED TO MATCH FINAL FINISHED GRADE ELEVATION.
2. CONTRACTOR TO TELEVISE EX. SS PRIOR TO UTILITY/STORM CONSTRUCTION. ANY LATERALS IDENTIFIED SHALL BE EXPOSED AND LOWERED IF NECESSARY TO ACCOMODATE STORM DRAIN CONSTRUCTION (REF. DETAIL). COMMERCIAL LOTS NORTH OF WILTSHIRE ARE ASSUMED TO HAVE LATERAL CONNECTIONS TO THE 12" SEWER MAIN. COORDINATE WITH SAWS WHEN LOCATION/ELEVATION OF LATERALS ARE VERIFIED.

STACEY L. WEICHERT
84036
LICENSED
PROFESSIONAL ENGINEER
STATE OF TEXAS
5-6-11

ESTIMATED QUANTITIES			
ITEM	DESCRIPTION	UNITS	QUANTITY
9500-XXXX	ADJUST EXISTING MANHOLES	EA	5
9500-XXXX	SANITARY SEWER LATERAL	LF	180
9500-XXXX	SANITARY SEWER CLEAN OUT	EA	6
9500-XXXX	SEWER MAIN TELEVISION INSPECTION	LF	840

NOTE: REFER TO PROFILE SHEETS FOR DROP MANHOLE AND NEW LINE INSTALLATION QUANTITIES

LEGEND

BY OTHERS

PRECONSTRUCTION SS INSPECTION (NOTE 2)

SAW CUT

RECONSTRUCTED ROADWAY

LEGEND

PROPOSED UTILITIES: (SOLID/BOLD)

SAN. SEWER/MANHOLE

EXISTING UTILITIES: (OPEN/SHADED)

WATER MAIN
GAS MAIN
SAN. SEWER/MANHOLE
STORM SEWER
OVERHEAD UTIL./POLE
FIBEROPTIC CABLE

Lockwood, Andrews & Newnam, Inc.
A LEO A DALY COMPANY
REGISTRATION NO: 2614

SAN ANTONIO WATER SYSTEM

FT. SAM HOUSTON TRANSPORTATION PROJECT

HARRY WURZBACH RD. AT RITTIMAN RD.

SAWS JOB NO. 08-5555

©2011
Texas Department of Transportation

SHEET 7 OF 12

DESIGNED:	FED. RD. DIV. NO.	STATE	PROJECT NO.			HIGHWAY NO.
CHECKED:	6	TEXAS				HARRY WURZBACH
DRAWN:	STATE DIST.	COUNTY	CONTROL NO.	SECTION NO.	JOB NO.	SHEET NO.
CHECKED:	SAT	BEXAR				251

I:\160-10240-009\4-0-production\4-01-drawings\Plan Sheets\Sewer\90% Submittal\07-manhole*loc03.dgn 4/29/2011 2:50:31 PM

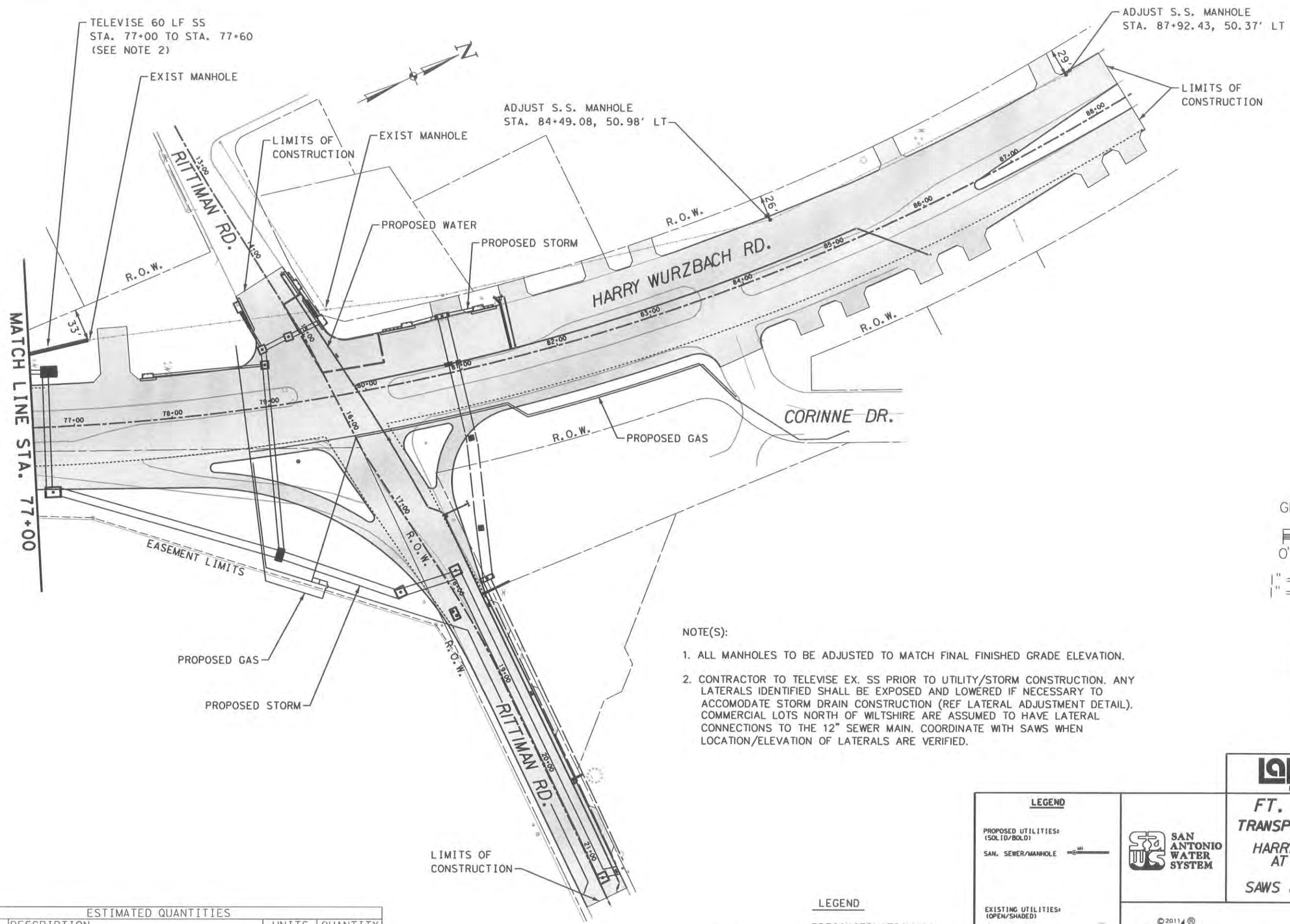

GRAPHIC SCALE

0' 50' 100'

1" = 100' (11 X 17)
1" = 50' (FULL SIZE)

STATE OF TEXAS
STACEY L. WEICHERT
84036
LICENSED
PROFESSIONAL ENGINEER
5-6-11

NOTE(S):

1. ALL MANHOLES TO BE ADJUSTED TO MATCH FINAL FINISHED GRADE ELEVATION.
2. CONTRACTOR TO TELEVISE EX. SS PRIOR TO UTILITY/STORM CONSTRUCTION. ANY LATERALS IDENTIFIED SHALL BE EXPOSED AND LOWERED IF NECESSARY TO ACCOMODATE STORM DRAIN CONSTRUCTION (REF LATERAL ADJUSTMENT DETAIL). COMMERCIAL LOTS NORTH OF WILTSHIRE ARE ASSUMED TO HAVE LATERAL CONNECTIONS TO THE 12" SEWER MAIN. COORDINATE WITH SAWS WHEN LOCATION/ELEVATION OF LATERALS ARE VERIFIED.

ESTIMATED QUANTITIES			
ITEM	DESCRIPTION	UNITS	QUANTITY
9500-XXXX	ADJUST EXISTING MANHOLES	EA	2
9500-XXXX	SEWER MAIN TELEVISION INSPECTION	LF	60

LEGEND

PRECONSTRUCTION SS TV INSPECTION (NOTE 2)

BY OTHERS — SAW CUT

RECONSTRUCTED ROADWAY

LEGEND

PROPOSED UTILITIES: (SOLID/BOLD)

SAN. SEWER/MANHOLE

EXISTING UTILITIES: (OPEN/SHADED)

WATER MAIN
GAS MAIN
SAN. SEWER/MANHOLE
STORM SEWER
OVERHEAD UTIL./POLE
FIBEROPTIC CABLE

Lockwood, Andrews & Newnam, Inc.
A LEO A DALY COMPANY
REGISTRATION NO: 2614

SAN ANTONIO WATER SYSTEM

FT. SAM HOUSTON TRANSPORTATION PROJECT

HARRY WURZBACH RD. AT RITTIMAN RD.

SAWS JOB NO. 08-5555

©2011 Texas Department of Transportation

SHEET 8 OF 12

DESIGNED:	FED. RD. DIV. NO.	STATE	PROJECT NO.			HIGHWAY NO.
CHECKED:	6	TEXAS				HARRY WURZBACH
DRAWN:	STATE DIST.	COUNTY	CONTROL NO.	SECTION NO.	JOB NO.	SHEET NO.
CHECKED:	SAT	BEXAR				252

I:\160-10240-009\4-0-production\4-01-drawings\Plan Sheets\Sewer\90% Submittal\08-manhole*loc04.dgn 4/29/2011 2:50:32 PM

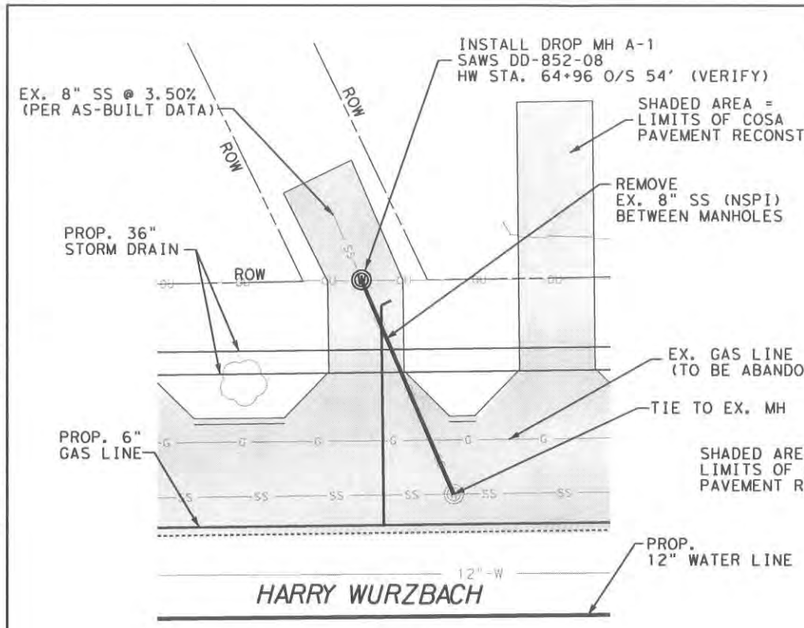

LINE A - STA 65+00

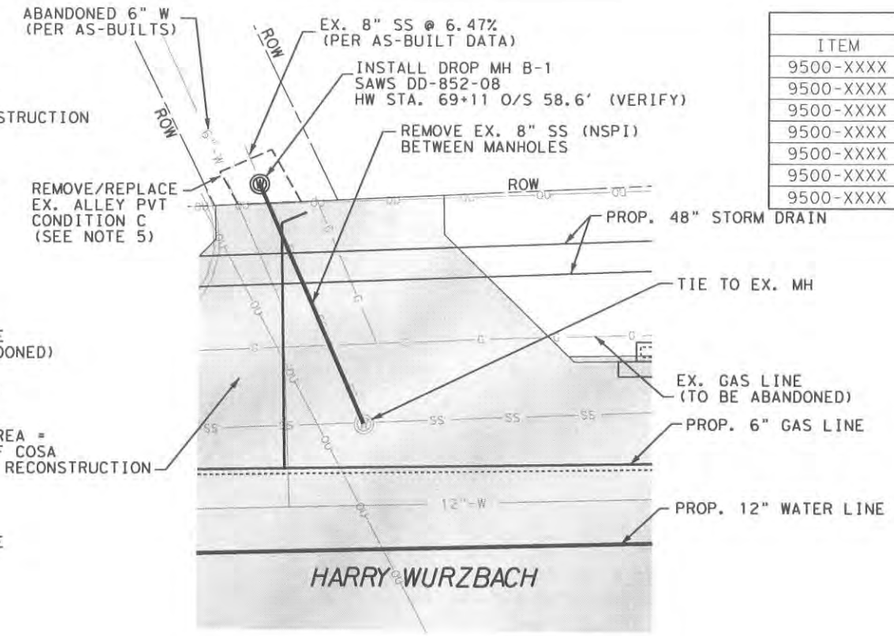

LINE B - STA 69+20

ESTIMATED QUANTITIES			
ITEM	DESCRIPTION	UNITS	QUANTITY
9500-XXXX	8" PVC SANITARY SEWER LINE (10'-14')	LF	65
9500-XXXX	SEWER MAIN TELEVISION INSPECTION	LF	65
9500-XXXX	SANITARY SEWER DROP MANHOLE (0'-6')	EA	2
9500-XXXX	EXTRA DEPTH MANHOLE (>6')	VF	11
9500-XXXX	BYPASS PUMPING	LS	1
9500-XXXX	TRENCH COMPLETION CONDITION "B"	SY	58
9500-XXXX	TRENCH COMPLETION CONDITION "C"	SY	6

NOTES:

1. EXISTING UTILITY LOCATIONS AND TIE-INS WITH EXISTING SEWER ARE APPROXIMATE. CONTRACTOR TO FIELD VERIFY LOCATION AND ELEVATION PRIOR TO CONSTRUCTION.
2. PROPOSED MANHOLE TOPS TO BE SET TO MATCH PROPOSED FINISHED ROADWAY GRADE OR EXISTING GRADE WHERE PLACED BEYOND ROADWAY WORK LIMITS. CONTRACTOR TO VERIFY TOP ELEVATIONS PRIOR TO CONSTRUCTION.
3. CUT/PLUG AND REMOVAL OF EXISTING SANITARY SEWER SHALL BE SUBSIDIARY TO NEW INSTALLATION (NSPI).
4. INSTALLATION OF LINES A & B TO REQUIRE BYPASS PUMPING. CONTRACTOR TO SUBMIT BYPASS/PUMPING INSTALLATION PLANS TO SAWS FOR APPROVAL PRIOR TO CONSTRUCTION.
5. REFERENCE PROJECT DETAILS FOR TRENCH COMPLETION CONDITION B (TEMPORARY) AND C (PERMANENT). TRENCH AREAS NOT SHOWN FOR PERMANENT REPAIR (CONDITION C) TO BE REPAIRED PER DETAIL FOR CONDITION B (TEMPORARY REPAIR FOR AREAS WHERE RECONSTRUCTION/RESTORATION WILL FOLLOW). (REFER TO DETAIL, SHEET 11).
6. REFER TO SAWS, CPS, AT&T, AND TRENCH EXCAVATION SAFETY NOTES ON GENERAL NOTES SHEET.

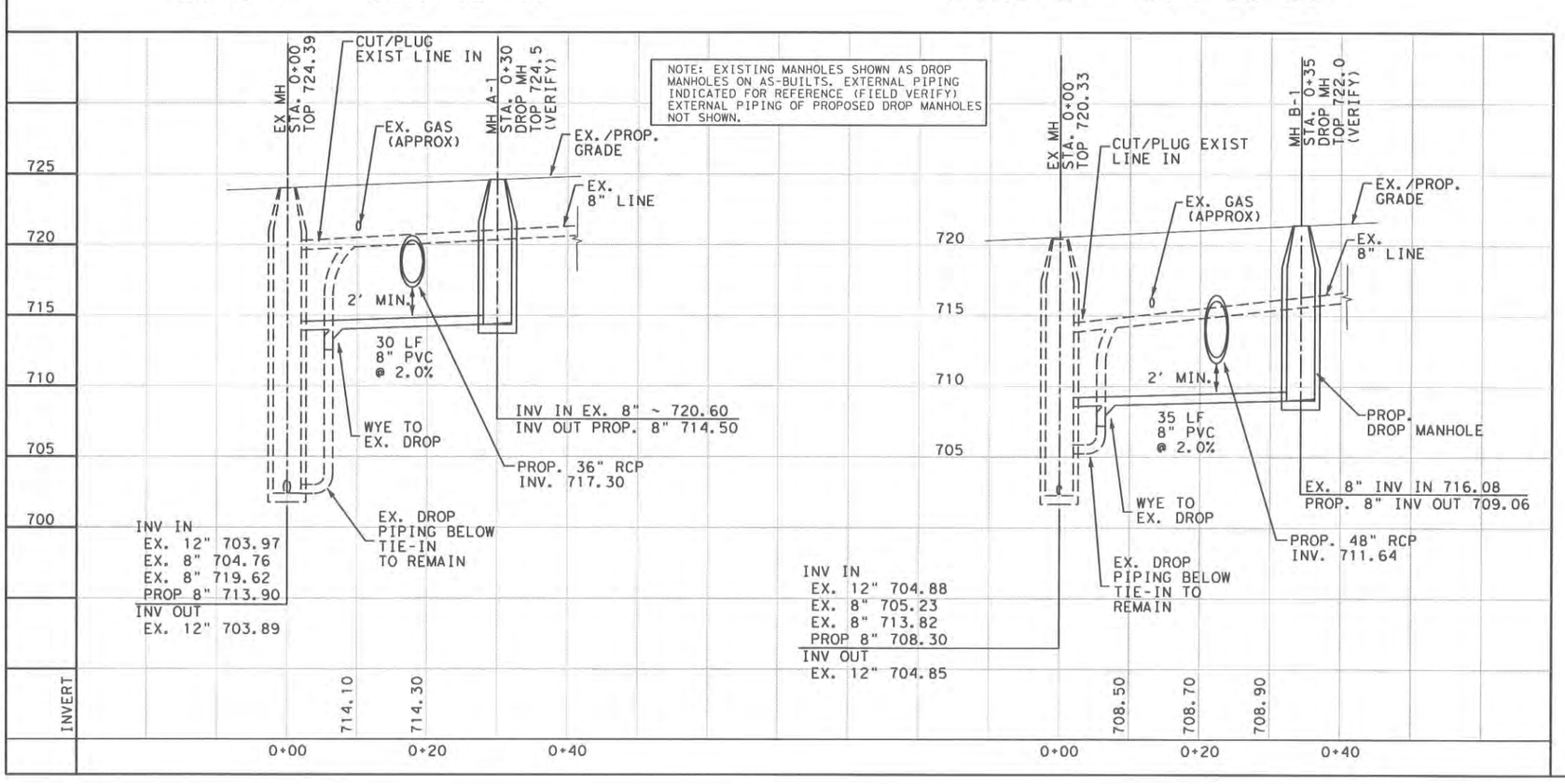

GRAPHIC SCALE

0' 10' 20'

(HALF SIZE) HORZ: 1" = 20' VERT: 1" =10'

(FULL SIZE) HORZ: 1" = 10' VERT: 1" =5'

LEGEND

BY OTHERS — SAW CUT

RECONSTRUCTED ROADWAY

STATE OF TEXAS — STACEY L. WEICHERT 84036 — LICENSED PROFESSIONAL ENGINEER — 5-6-11

Lockwood, Andrews & Newnam, Inc. — A LEO A DALY COMPANY — REGISTRATION NO. 2614

SAN ANTONIO WATER SYSTEM

FT. SAM HOUSTON TRANSPORTATION PROJECT

SANITARY SEWER PROFILES

SAWS JOB NO. 08-5555

©2011 Texas Department of Transportation

SHEET 9 OF 12

DESIGNED:	FED. RD. DIV. NO.	STATE	PROJECT NO.			HIGHWAY NO.
CHECKED:	6	TEXAS				HARRY WURZBACH
DRAWN:	STATE DIST.	COUNTY	CONTROL NO.	SECTION NO.	JOB NO.	SHEET NO.
CHECKED:	SAT	BEXAR				252A

I:\160-10240-009\4-0-production\4-01-drawings\plan sheets\sewer\90% Submittal\09-Sewer*MH*Profiles.dgn 4/29/2011 2:50:33 PM

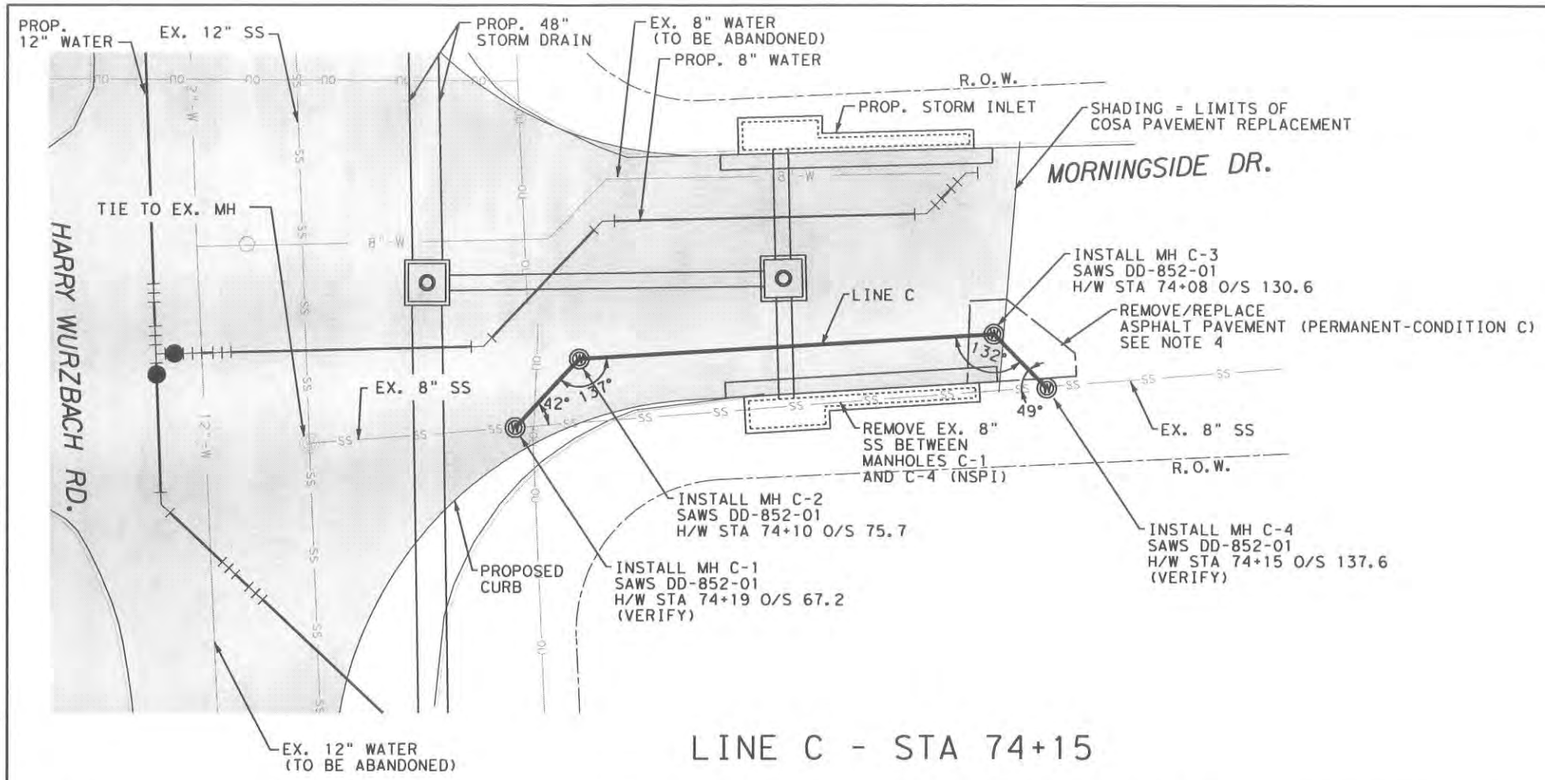

LINE C - STA 74+15

ESTIMATED QUANTITIES			
ITEM	DESCRIPTION	UNITS	QUANTITY
9500-XXXX	8" PVC SANITARY SEWER LINE (6'-10')	LF	78
9500-XXXX	SEWER MAIN TELEVISION INSPECTION	LF	78
9500-XXXX	SANITARY SEWER MANHOLE (0'-6')	EA	4
9500-XXXX	TRENCH COMPLETION CONDITION "B"	SY	35
9500-XXXX	TRENCH COMPLETION CONDITION "C"	SY	14

NOTES:

1. EXISTING UTILITY LOCATIONS AND TIE-INS WITH EXISTING SEWER ARE APPROXIMATE. CONTRACTOR TO FIELD VERIFY LOCATION AND ELEVATION PRIOR TO CONSTRUCTION.
2. PROPOSED MANHOLE TOPS TO BE SET TO MATCH PROPOSED FINISHED ROADWAY GRADE OR EXISTING GRADE WHERE PLACED BEYOND ROADWAY WORK LIMITS. CONTRACTOR TO VERIFY TOP ELEVATIONS PRIOR TO CONSTRUCTION.
3. CUT/PLUG AND REMOVAL OF EXISTING SANITARY SEWER SHALL BE SUBSIDIARY TO NEW INSTALLATION (NSPI)
4. REFERENCE PROJECT DETAILS FOR TRENCH COMPLETION CONDITION B (TEMPORARY) AND C (PERMANENT). TRENCH AREAS NOT SHOWN FOR PERMANENT REPAIR (CONDITION C) TO BE REPAIRED PER DETAIL FOR CONDITION B (TEMPORARY REPAIR FOR AREAS WHERE RECONSTRUCTION/RESTORATION WILL FOLLOW). (REFER TO DETAIL, SHEET 11).
5. REFER TO SAWS, CPS, AT&T, AND TRENCH EXCAVATION SAFETY NOTES ON GENERAL NOTES SHEET.

GRAPHIC SCALE

0' 10' 20'

(HALF SIZE) HORZ: 1" = 20' VERT: 1" = 10'

(FULL SIZE) HORZ: 1" = 10' VERT: 1" = 5'

LEGEND

BY OTHERS — SAW CUT; RECONSTRUCTED ROADWAY

STATE OF TEXAS — STACEY L. WEICHERT — 84036 — LICENSED PROFESSIONAL ENGINEER

5-6-11

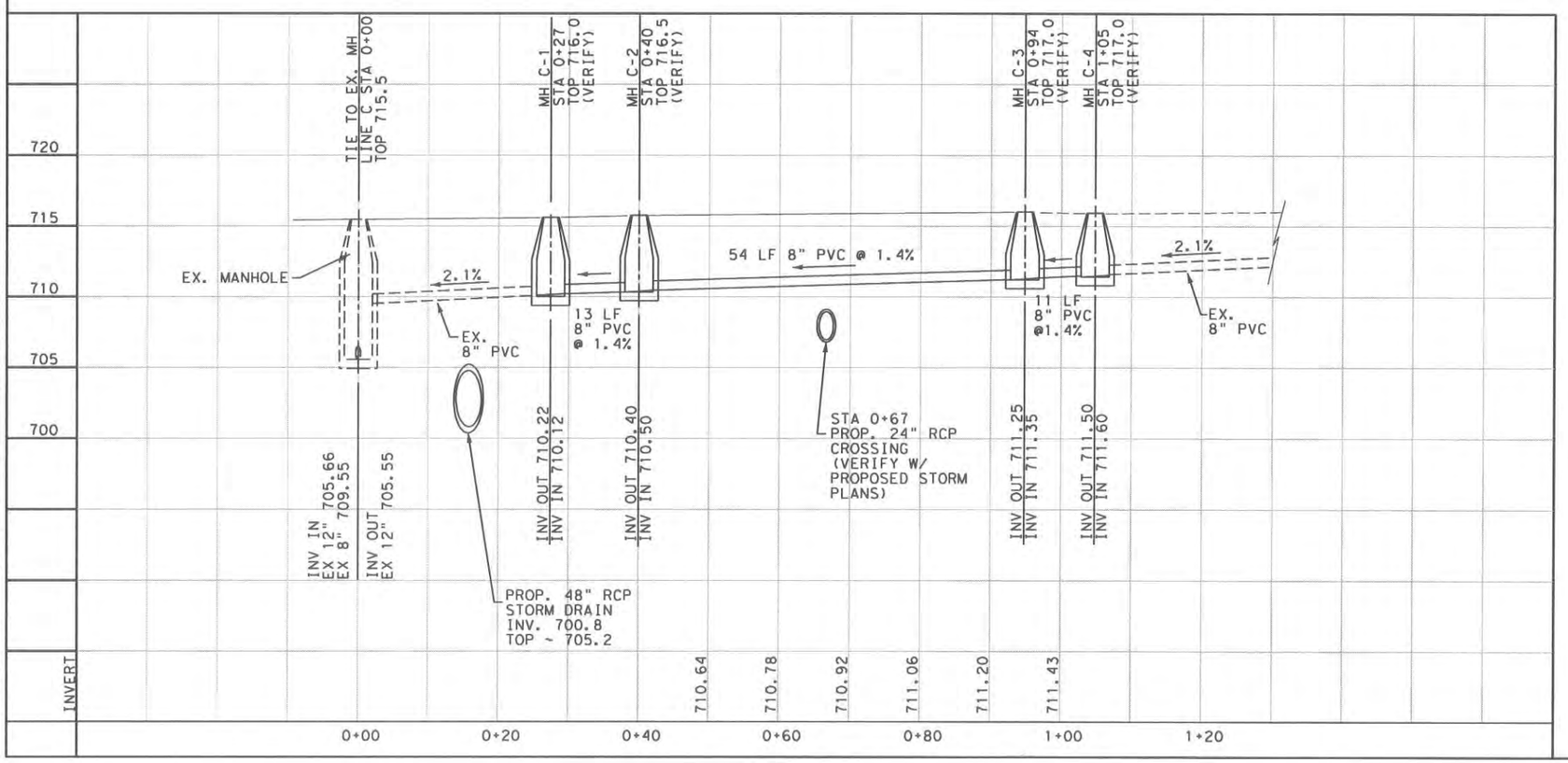

Lockwood, Andrews & Newnam, Inc. — A LEO A DALY COMPANY — REGISTRATION NO: 2614

SAN ANTONIO WATER SYSTEM

FT. SAM HOUSTON TRANSPORTATION PROJECT

SANITARY SEWER PROFILES

SAWS JOB NO. 08-5555

©2011 Texas Department of Transportation

SHEET 10 OF 12

DESIGNED:	FED. RD. DIV. NO.	STATE	PROJECT NO.			HIGHWAY NO.
CHECKED:	6	TEXAS				HARRY WURZBACH
DRAWN:	STATE DIST.	COUNTY	CONTROL NO.	SECTION NO.	JOB NO.	SHEET NO.
CHECKED:	SAT	BEXAR				252B

I:\160-10240-009\4-0-production\4-01-drawings\plan sheets\sewer\90% Submittal\10-Sewer*MH*Profiles.dgn 4/29/2011 2:50:34 PM

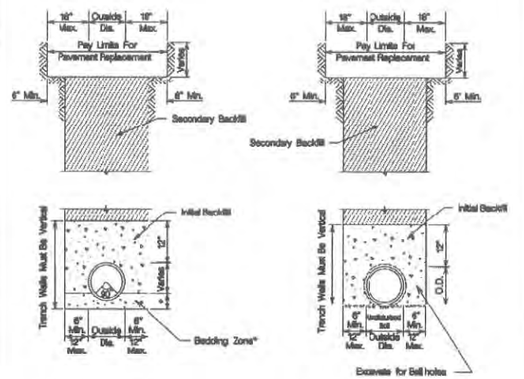

* Sewer Gravel (6" Min. or 1/6 O.D. of the pipe, whichever is greater as directed by the Inspector

* In areas of over excavation, encasement shall extend from trench wall to trench wall. Pay Limits shall not exceed 12" max. as shown on detail. Additional encasement shall be incidental.

1) RIGID PIPE - UNSTABLE OR UNACCEPTABLE CONDITIONS

FLEXIBLE PIPE - ALL CONDITIONS

2) RIGID PIPE - EXISTING STABLE BEDDING CONDITIONS

PROPERTY OF SAN ANTONIO WATER SYSTEM SAN ANTONIO, TEXAS	SANITARY SEWER PIPE LAID IN TRENCH	APPROVED March 2008	REVISED
		DD-804-01	SHEET 1 OF 1

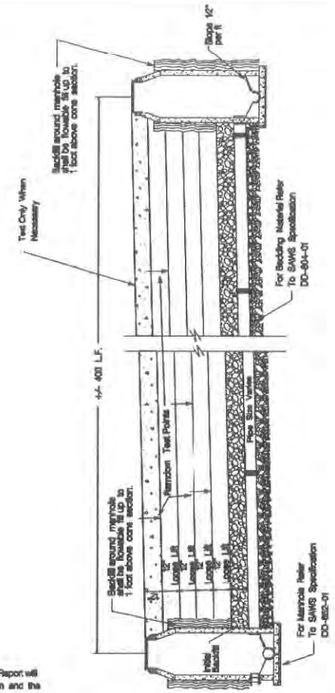

NOTE:
The Compaction Report will indicate the station and the depth of each test point

PROPERTY OF SAN ANTONIO WATER SYSTEM SAN ANTONIO, TEXAS	TRENCH COMPACTION DETAIL	APPROVED MARCH 2008	REVISED JUNE 2009
		DD-804-02	SHEET 1 OF 1

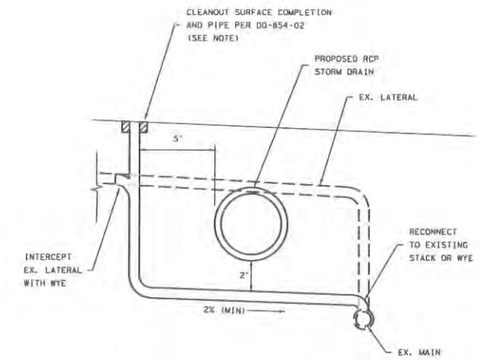

NOTE:

CLEANOUT TO INCLUDE SURFACE COMPLETION AND VERICAL PIPING; LATERAL TO INCLUDE HORIZONTAL PIPING AND ALL BENDS, FITTINGS, AND OTHER ITEMS CALLED OUT IN PROJECT SPECIFICATIONS FOR LATERAL MEASUREMENT AND PAYMENT.

SANITARY SEWER LATERAL DETAIL

N. T. S.

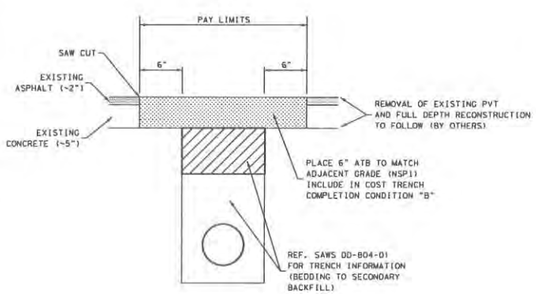

CONDITION "B" APPLIES TO TRENCHES INSTALLED WITHIN EXISTING PAVEMENT WHERE FULL DEPTH RECONSTRUCTION AND/OR RIGHT-OF-WAY RESTORATION WILL FOLLOW (BY OTHERS) - SURFACE COMPLETION CONSISTS OF PLACEMENT OF TEMPORARY PAVEMENT. (6" ASPHALT TREATED BASE) SURFACE AREA BASED ON LIMITS SHOWN

CUT AND REPLACE PAVEMENT

TRENCH SURFACE COMPLETION
CONDITION "B"

N. T. S.

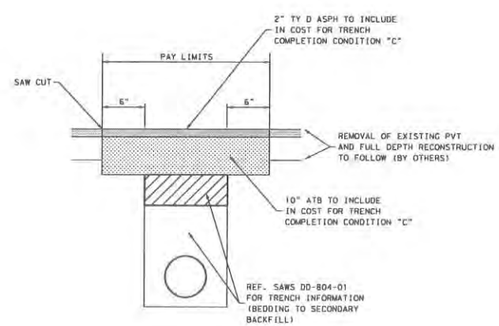

CONDITION "C" APPLIES TO TRENCHES INSTALLED WITHIN EXISTING PAVEMENT WHERE FULL DEPTH RECONSTRUCTION WILL NOT OCCUR. SURFACE COMPLETION CONSISTS OF PLACEMENT OF PERMANENT PAVEMENT (10" ASPHALT TREATED BASE AND 2" TYPE D HMAC) SURFACE AREA BASED ON LIMITS SHOWN

CUT AND REPLACE PAVEMENT

TRENCH SURFACE COMPLETION
CONDITION "C"

N. T. S.

STATE OF TEXAS
STACEY L. WEICHERT
84036
LICENSED
PROFESSIONAL ENGINEER
5-6-11

Lockwood, Andrews & Newnam, Inc.
A LEO A DALY COMPANY
REGISTRATION NO: 2614

SAN ANTONIO WATER SYSTEM

FT. SAM HOUSTON TRANSPORTATION PROJECT

SAWS STD SEWER DETAILS

SAWS JOB NO. 08-5555

©2011
Texas Department of Transportation

SHEET 11 OF 12

DESIGNED:	FED. RD. DIV. NO.	STATE	PROJECT NO.			HIGHWAY NO.
CHECKED:	6	TEXAS				HARRY WURZBACH
DRAWN:	STATE DIST.	COUNTY	CONTROL NO.	SECTION NO.	JOB NO.	SHEET NO.
CHECKED:	SAT	BEXAR				252C

I:\160-10240-009\4-0-production\4-01-drawings\plan sheets\sewer\90% Submittal\11-SAWS-DETAIL.dgn 4/29/2011 2:50:35 PM

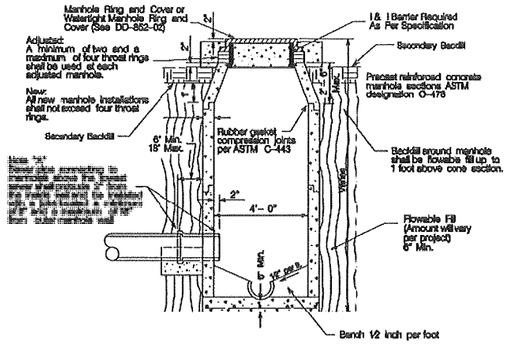

PRECAST MANHOLE

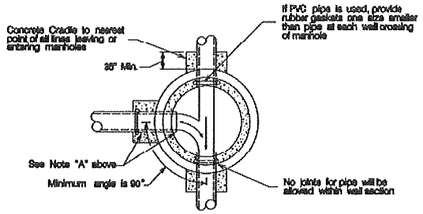

MANHOLE FLOOR PLAN

General Notes:

1) Material for sanitary sewer pipe must be the same from manhole to manhole. Changes in type of pipe may be made only at manholes, or special structures, except as approved by the SAWS project Engineer.
2) Adaptors and Concrete Collars shall be used as directed by the Engineer and as approved by the SAWS project Engineer.
3) Watertight manhole rings and covers shall be Trans-Tex A77 "O" Ring or approved equal.
4) The minimum angle of flow for a connecting sewer to the direction of flow defined by a collection system is 90 degrees, unless approved by SAWS.

PROPERTY OF SAN ANTONIO WATER SYSTEM SAN ANTONIO, TEXAS	STANDARD PRECAST MANHOLE	APPROVED March 2008	REVISED June 2009	SHEET 1 OF 2
		DD-852-01		

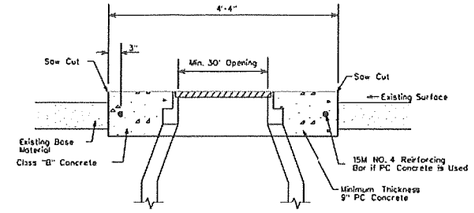

SECTION A-A

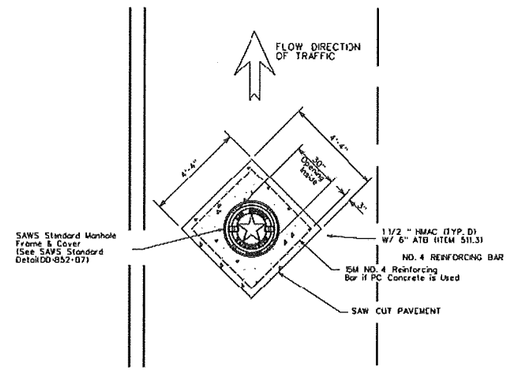

NOTE:
1. The concrete shall be 2500 psi, min. and reinforced with No. 4 bars, as shown.
2. The concrete shall extend to edge of saw cut pavement.
3. Manhole Ring Encasement is required on cirmanholes.

PROPERTY OF SAN ANTONIO WATER SYSTEM SAN ANTONIO, TEXAS	MANHOLE RING ENCASEMENT DETAIL	APPROVED MARCH 2008	REVISED JUNE 2009	SHEET 2 OF 2
		DD-852-03		

MATERIAL STANDARDS REQUIREMENTS
ASTM A 48 Class 30 B AASHTO M-306-89
Ring Wt.220 +/- 5 Lbs. Lid Wt.200 +/- 5 Lbs.

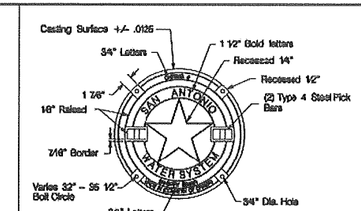

COVER FACE
(Unpainted +/- .125)

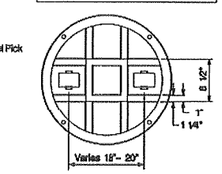

COVER BACK
(Unpainted +/- .125)

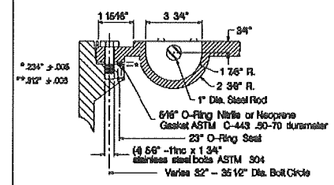

WATERTIGHT AND PICK BAR DETAIL

Manhole shall be proof-load tested to 40,000 lbs. in accordance with AASHTO M-306-89

Covers and Rings shall be interchangeable with approved manufacturers.

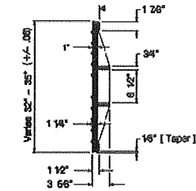

COVER SECTION
(Unpainted +/- .125)

▼ All seating surfaces shall be machined (+/- .03).

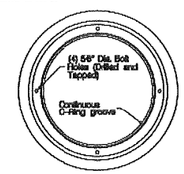

FRAME TOP VIEW

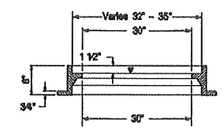

FRAME SECTION
(Unpainted +/- .125)

PROPERTY OF SAN ANTONIO WATER SYSTEM SAN ANTONIO, TEXAS	MANHOLE RING AND COVER DETAIL	APPROVED March 2008	REVISED June 2009	SHEET 1 OF 1
		DD-852-07		

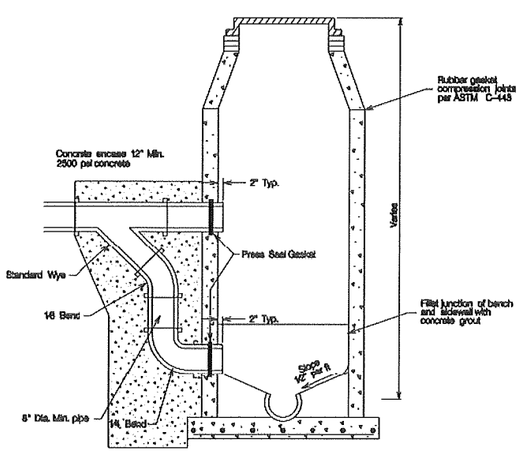

Note:
Price for drop fittings and encasement to be included with the price of manhole.

PROPERTY OF SAN ANTONIO WATER SYSTEM SAN ANTONIO, TEXAS	DROP MANHOLE DETAIL	APPROVED March 2008	REVISED	SHEET 1 OF 1
		DD-852-08		

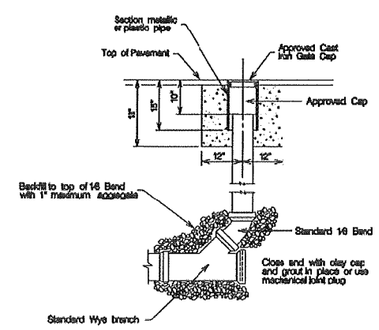

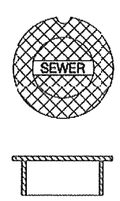

Approved Gate Cap (Heavy Duty)

PROPERTY OF SAN ANTONIO WATER SYSTEM SAN ANTONIO, TEXAS	TYPICAL CLEANOUT DETAIL	APPROVED March 2008	REVISED	SHEET 1 OF 1
		DD-854-02		

STATE OF TEXAS
STACEY L. WEICHERT
84036
LICENSED
PROFESSIONAL ENGINEER
5-6-11

Lockwood, Andrews & Newnam, Inc.
A LEO A DALY COMPANY
REGISTRATION NO: 2614

SAN ANTONIO WATER SYSTEM

FT. SAM HOUSTON TRANSPORTATION PROJECT

SAWS STD
SEWER DETAILS

SAWS JOB NO. 08-5555

©2011 Texas Department of Transportation

SHEET 12 OF 12

DESIGNED:	FED. RD. DIV. NO.	STATE	PROJECT NO.			HIGHWAY NO.
CHECKED:	6	TEXAS				HARRY WURZBACH
DRAWN:	STATE DIST.	COUNTY	CONTROL NO.	SECTION NO.	JOB NO.	SHEET NO.
CHECKED:	SAT	BEXAR				252D

L:\160-10240-009\4-0-Production\4-01-Drawings\Plan Sheets\Sewer\90% Submittal\12-SAWS-DETAIL.dgn 6/3/2011 3:25:44 PM

SAWS PROJECT NUMBER: 08-5055

SAN ANTONIO WATER SYSTEM

FT. SAM HOUSTON TRANSPORTATION PROJECT
WATER WORKS IMPROVEMENTS

100% SUBMITTAL
MARCH 8, 2011

STATE OF TEXAS
STACEY L. WEIGHERT
84036
LICENSED
PROFESSIONAL ENGINEER

3-8-11

LOCKWOOD, ANDREWS AND NEWNAM, INC.
REGISTRATION NO: 2614

I:\160-10240-009\4-0-production\4-01-drawings\plan sheets\water\90% submittal\01-Water-CVR.dgn 3/8/2011 6:05:12 PM

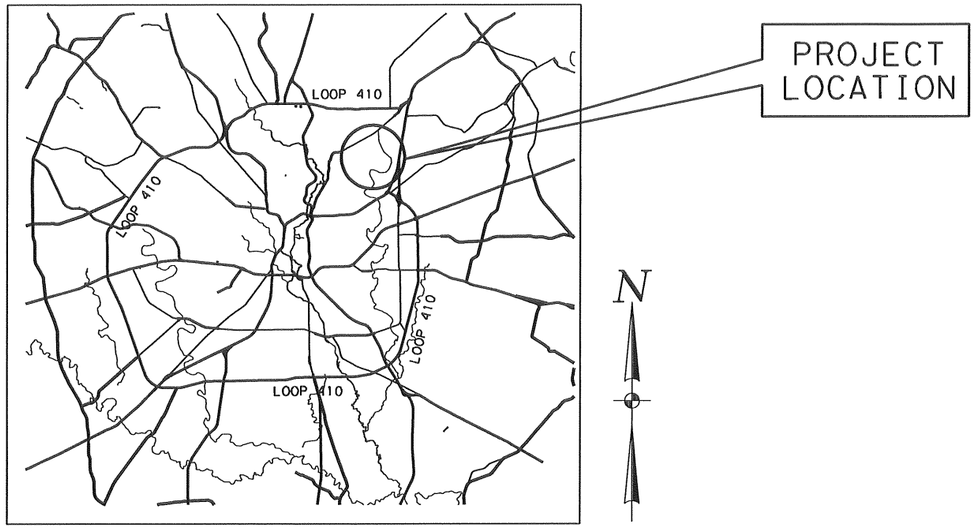

VICINITY MAP

NOT TO SCALE

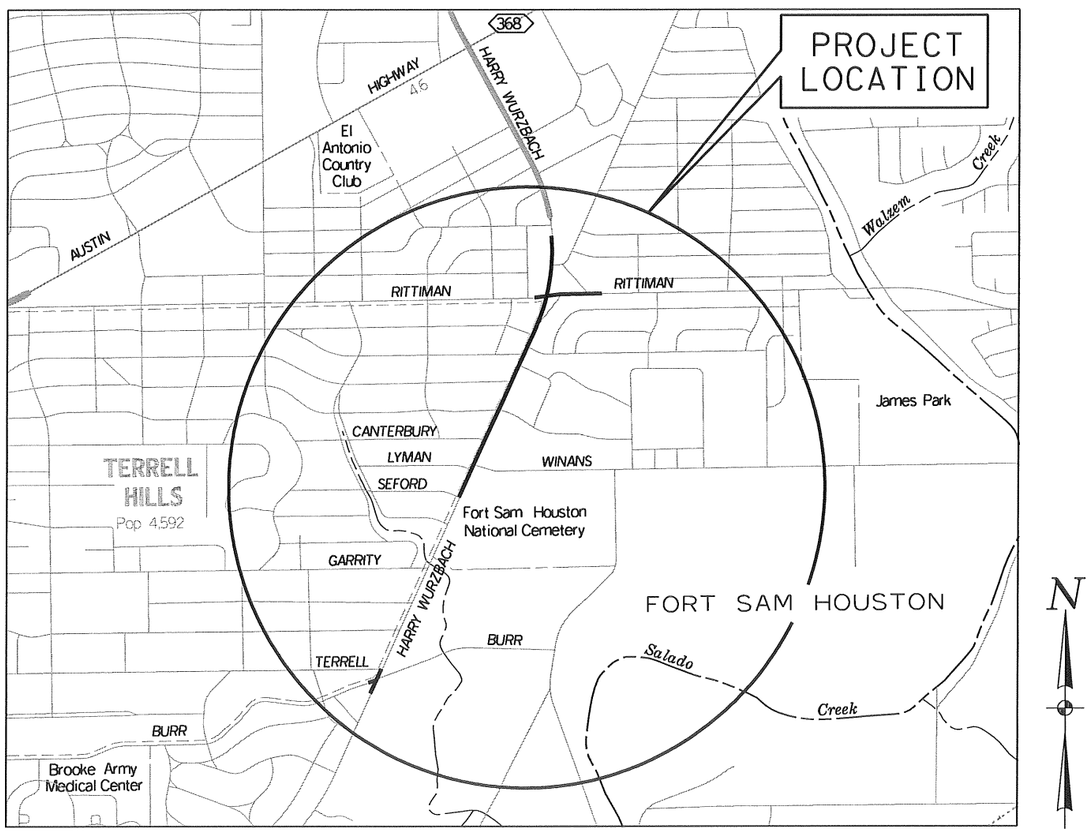

LOCATION MAP - SEE SHEET 3 FOR PROJECT KEY MAP

SCALE: 1" = 2000'

SHEET INDEX

1	COVER SHEET
2	LOCATION MAP AND SHEET INDEX
3	KEY SHEET AND CONTROL
4	GENERAL NOTES
5-7	HARRY WURZBACH RD. & BURR RD. INTERSECTION
8-12	HARRY WURZBACH RD. & WINANS RD. INTERSECTION
13-16	HARRY WURZBACH RD. & RITTIMAN RD. INTERSECTION
17	PROFILE 20" MAIN
18-22	DETAILS

ESTIMATED QUANTITIES

ITEM	DESCRIPTION	UNITS	QUANTITY
9501-XXXX	MOBILIZATION (10%)	LS	1
9501-XXXX	PREPARE ROW (5%)	LS	1
9501-XXXX	TRENCH EXCAVATION PROTECTION	LF	5,500
9501-XXXX	8" PVC WATER MAIN (RESTRAINED)	LF	545
9501-XXXX	12" PVC WATER MAIN	LF	4,230
9501-XXXX	16" PVC WATER MAIN	LF	585
9501-XXXX	20" DI WATER MAIN	LF	140
9501-XXXX	VALVE BOX ADJUSTMENT	EA	8
9501-XXXX	8" GATE VALVE	EA	6
9501-XXXX	12" GATE VALVE	EA	13
9501-XXXX	16" GATE VALVE	EA	2
9501-XXXX	20" BUTTERFLY VALVE	EA	1
9501-XXXX	8" TIE-IN	EA	7
9501-XXXX	12" TIE-IN	EA	7
9501-XXXX	16" TIE-IN	EA	1
9501-XXXX	20" TIE-IN	EA	1
9501-XXXX	FIRE HYDRANT ASSEMBLY	EA	7
9501-XXXX	RELAY 3/4" SHORT SERVICE	EA	5
9501-XXXX	RELAY 1" SHORT SERVICE	EA	1
9501-XXXX	RELAY 1" LONG SERVICE	EA	1
9501-XXXX	RELAY 2" SHORT SERVICE	EA	2
9501-XXXX	PIPE FITTINGS	TON	15
9501-XXXX	CASING OR LINER, 24"	LF	55
9501-XXXX	HYDROSTATIC TESTING	EA	5
9501-XXXX	2" BLOWOFF TEMPORARY	EA	14
9501-XXXX	4" BLOWOFF TEMPORARY	EA	1
9501-XXXX	2" BLOWOFF PERMANENT	EA	1
9501-XXXX	TRENCH COMPLETION TYPE "A"	SY	313
9501-XXXX	TRENCH COMPLETION TYPE "B"	SY	2,115
9501-XXXX	AC PIPE REMOVAL	LS	1
9501-XXXX	AC PIPE REMOVAL PLAN	LS	1
9501-XXXX	RECYCLED WATER VAULT RECONSTRUCTION	EA	3
9501-XXXX	RECYCLED WATER HYDRANT RELOCATION	EA	1
9501-XXXX	FLOWABLE FILL	CY	122
9501-XXXX	CONCRETE ENCASEMENT, CRADLES, SADDLES & COLLARS	CY	18

STATE OF TEXAS
STACEY L. WEICHERT
84036
LICENSED
PROFESSIONAL ENGINEER
7-20-11

Lockwood, Andrews & Newnam, Inc.
A LEO A DALY COMPANY
REGISTRATION NO: 2614

SAN ANTONIO WATER SYSTEM

FT. SAM HOUSTON TRANSPORTATION PROJECT

LOCATION MAP AND INDEX SHEET

SAWS JOB NO. 08-5055

©2011
Texas Department of Transportation

SHEET 2 OF 22

DESIGNED:	FED. RD. DIV. NO.	STATE	PROJECT NO.			HIGHWAY NO.
CHECKED:	6	TEXAS				HARRY WURZBACH
DRAWN:	STATE DIST.	COUNTY	CONTROL NO.	SECTION NO.	JOB NO.	SHEET NO.
CHECKED:	SAT	BEXAR				253

L:\160-10240-009\4-0-Production\4-01-Drawings\Plan Sheets\Water\90% Submittal\02-Water-MAP*INDEX.dgn 7/20/2011 4:03:00 PM

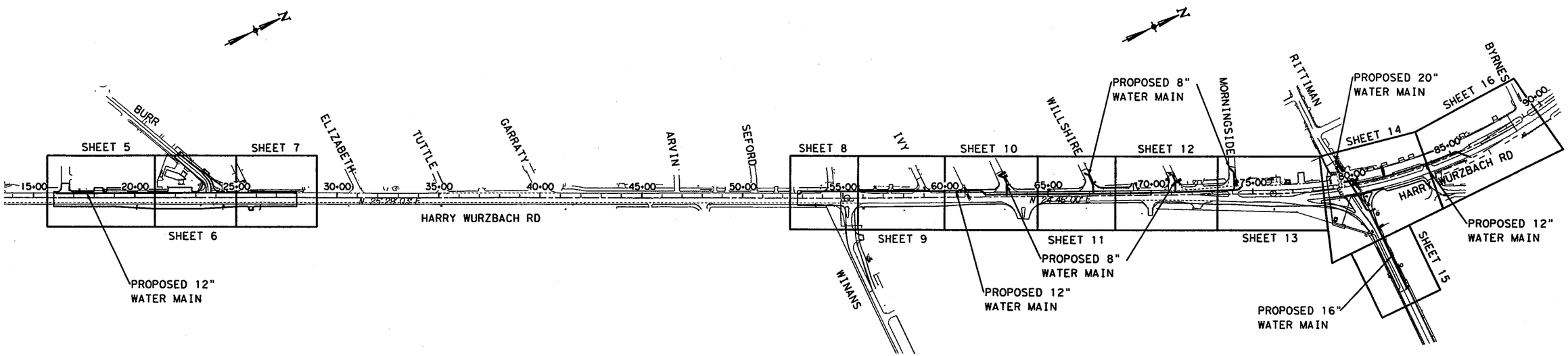

KEY MAP

GRAPHIC SCALE

0 500 1000

1" =500'

INFORMATION PROVIDED FOR REFERENCE ONLY - REFER TO PROJECT CONTROL SHEET IN ROADWAY PLANS FOR CONFIRMATION OF CONTROL AND ADDITIONAL DATUM/SCALE FACTOR INFORMATION

DATUM LISTED AS NAD83 (93) TX STATE PLAIN SO. CENTRAL ZONE (4204)

COORDINATES ARE SURFACE DERIVED BY MULTIPLYING GRID COORDINATES BY 1.00017

VERTICAL DATUM BASED ON NAVD88

GPS 1
SET ½" IRON ROD WITH ALUMINUM CAP STAMPED "COSA CTL 1"
N: 13728899.122
E: 2149588.679
ELEV: 727.00'

GPS 2
SET ½" IRON ROD WITH ALUMINUM CAP STAMPED "COSA CTL 2"
N: 13728548.879
E: 2149787.670
ELEV: 729.95'

GPS 3
SET ½" IRON ROD WITH ALUMINUM CAP STAMPED "COSA CTL 3"
N: 13719638.649
E: 2146886.212
ELEV: 729.91'

GPS 4
SET ½" IRON ROD WITH ALUMINUM CAP STAMPED "COSA CTL 4"
N: 13720002.905
E: 2147085.464
ELEV: 723.39'

PROJECT CONTROL

STATE OF TEXAS
STACEY L. WEICHERT
84036
LICENSED
PROFESSIONAL ENGINEER
3-8-11

Lockwood, Andrews & Newnam, Inc.
A LEO A DALY COMPANY
REGISTRATION NO: 2614

SAN ANTONIO WATER SYSTEM

FT. SAM HOUSTON TRANSPORTATION PROJECT

KEY MAP/CONTROL

SAWS JOB NO. 08-5055

©2011
Texas Department of Transportation

SHEET 3 OF 22

DESIGNED:	FED. RD. DIV. NO.	STATE	PROJECT NO.			HIGHWAY NO.
CHECKED:	6	TEXAS				HARRY WURZBACH
DRAWN:	STATE DIST.	COUNTY	CONTROL NO.	SECTION NO.	JOB NO.	SHEET NO.
CHECKED:	SAT	BEXAR				254

L:\160-10240-009\4-0-Production\4-01-Drawings\Plan Sheets\Water\90% Submittal\03-Water-MAP*SHEETKEY.dgn 3/8/2011 9:16:54 PM

SAWS GENERAL NOTES

1. All materials and construction procedures within the scope of this contract shall be approved by the San Antonio Water System (SAWS) and comply with the following as applicable:

   A. Current Texas Commission on Environmental Quality Design Criteria for Water Systems Chapter 290, Rules and Regulations for Public Water Systems.

   B. Current TXDOT "Standard Specifications for Construction of Highways, Streets and Drainage."

   C. Current "SAWS Standard Specifications for Construction."

   D. Current City of San Antonio (COSA) "Standard Specifications for Public Works Construction."

   E. Current COSA Tree Ordinance.

   F. LAM project SAWS special specification and any associated special provisions.

2. The Contractor is to notify and make arrangements with the SAWS Construction Inspection Division at 233-3500 and the involved home residents and /or property owners 48 hours prior to excavation.

3. The location and depths of existing utilities, including service laterals, shown on the plans are approximate only. Actual locations and depths must be field verified by the contractor 48 hours prior to construction and it shall be the Contractors responsibility to locate utility service lines as required for construction and to protect them during construction.

4. The contractor shall verify the exact location of underground utilities and drainage structures at least 48 hours prior to construction whether shown on plans or not, and to protect the same during construction.

COSA Drainage	207-8048
COSA Traffic Signal Operations	207-7720
Texas State Wide One Call Locator	1-800-545-6005
Bexar Metropolitan Water District	354-6536
SAWS Utility Relocations	233-2010
SAWS Production Control Center	233-2016
City Public Service (CPS)	1-800-344-8377

5. The Contractor shall be responsible for restoring to its original or better condition from damages done to existing fences, curbs, streets, driveways, sidewalks, landscaping and structures.

6. The Contractor shall avoid cutting roots larger that one inch in diameter when excavating near existing trees. Excavation in vicinity of trees shall proceed with caution. The Contractor shall contact the City Arborist at 207-8053 for guidance. SAWS Construction Inspector shall also be notified.

7. The Contractor shall not place any waste materials in the 100-year Flood Plain without first obtaining an approved Flood Plain Permit.

8. Prior to tie-ins, any shutdowns of existing water mains of any size must be coordinated with SAWS Inspection and/or SAWS Production groups at least one week in advance of the shutdown. The contractor must also provide a sequence of work as related to the tie-ins; this is at no Additional cost to SAWS or the project and it is the responsibility of the contractor to sequence the work accordingly.

9. Salvage fire hydrants that are being replaced and return them to SAWS storage (N.S.P.I.)

10. It shall be the contractor's responsibility to plan and coordinate his/her utility work with other utilities as necessary to assure all proposed utilities are installed in a logical and organized manor and sequenced as necessary to minimize disruptions in utility services to residential and commercial owners located within the project area. (N.S.P.I.)

GENERAL NOTES

1. CONTRACTOR SHALL INCORPORATE THE USE OF A TRENCH BOX OR OTHER ACCEPTABLE SAFETY SYSTEM IN ANY TRENCH THAT EXCEEDS FIVE (5) FEET IN DEPTH. CONTRACTOR SHALL HAVE A TEXAS LICENSED PROFESSIONAL ENGINEER DESIGN THE TRENCH EXCAVATION PROTECTION SYSTEM (N.S.P.I.). CONTRACTOR AND/OR CONTRACTOR'S INDEPENDENTLY RETAINED EMPLOYEE OR SAFETY CONSULTANT SHALL IMPLEMENT A TRENCH SAFETY PROGRAM IN ACCORDANCE WITH OSHA STANDARDS GOVERNING THE PRESENCE AND ACTIVITIES OF INDIVIDUALS WORKING IN AND AROUND TRENCH EXCAVATION.

2. SAWS SHALL MACHINE CHLORINATE NEW WATER MAINS WHERE WATER MAIN LENGTHS ARE GREATER THAN 800 FT.

3. CONTRACTOR SHALL CHLORINATE NEW MAINS WITH HTH WHERE WATER MAIN LENGTHS ARE 800 FT OR LESS.

4. WHENEVER POWER/TEL. POLES ARE ADJACENT TO THE PROPOSED CONSTRUCTION, THE CONTRACTOR SHALL PROVIDE PROPER SHORING, BRACING, AND/OR OTHER SUITABLE SUPPORT FOR THE POLES DURING CONSTRUCTION. (N.S.P.I.)

5. CONTRACTOR TO PROVIDE PROPERTY OWNER ACCESS TO PROPERTY AT ALL TIMES.

6. MAINTAIN EXISTING DRAINAGE WHEN WORKING IN R.O.W.

7. CONTRACTOR SHALL VERIFY ALL TIE-INS PRIOR TO INITIATION OF CONSTRUCTION ON ASSOCIATED MAINS.

8. TRAFFIC CONTROL TO BE DIRECTED/PHASED AS INDICATED IN THE ROADWAY PLANS UNLESS OTHERWISE NOTED.

9. ASBESTOS CEMENT (AC) PIPE, ALSO KNOWN AS TRANSITE PIPE, AND WHICH IS KNOWN TO BE AN ASBESTOS-CONTAINING MATERIAL (ACM), IS LOCATED WITHIN THE PROJECT LIMITS. SPECIAL WASTE MANAGEMENT PROCEDURES AND HEALTH AND SAFETY REQUIREMENTS WILL BE APPLICABLE WHEN REMOVAL AND/OR DISTURBANCE OF THIS PIPE OCCUR. PAYMENT FOR SUCH WORK IS TO BE MADE UNDER SPECIAL SPECIFICATION FOR HANDLING AND DISPOSAL OF ASBESTOS CEMENT PIPE.

10. ALL RESTRAINT AND ANCHORAGE TO BE SUBSIDIARY TO THE PIPE (N.S.P.I.)

11. UNLESS OTHERWISE SHOWN, ALL BURIED GATE AND BUTTERFLY VALVES SHALL INCLUDE 6" VALVE BOX ASSEMBLY.

ABBREVIATIONS:

E.O.P.	EDGE OF PAVEMENT
G	GAS
N.T.S.	NOT TO SCALE
N.S.P.I.	NO SEPARATE PAY ITEM
OU	OVERHEAD UTILITY
P.P.	POWER POLE
SS	SANITARY SEWER
R.O.W.	RIGHT OF WAY
U.G.	UNDER GROUND

STATE OF TEXAS
STACEY L. REICHERT
84036
LICENSED
PROFESSIONAL ENGINEER
3-8-11

Lockwood, Andrews & Newnam, Inc.
A LEO A DALY COMPANY
REGISTRATION NO: 2614

SAN ANTONIO WATER SYSTEM

FT. SAM HOUSTON TRANSPORTATION PROJECT

GENERAL NOTES

SAWS JOB NO. 08-5055

©2011 Texas Department of Transportation

SHEET 4 OF 22

DESIGNED:	FED. RD. DIV. NO.	STATE	PROJECT NO.			HIGHWAY NO.
CHECKED:	6	TEXAS				HARRY WURZBACH
DRAWN:	STATE DIST.	COUNTY	CONTROL NO.	SECTION NO.	JOB NO.	SHEET NO.
CHECKED:	SAT	BEXAR				255

I:\160-10240-009\4-0-production\4-01-drawings\plan sheets\water\90% submittal\03*GN*Water.dgn 3/8/2011 6:05:16 PM

ESTIMATED QUANTITIES			
ITEM	DESCRIPTION	UNITS	QUANTITY
9501-XXXX	TRENCH EXCAVATION PROTECTION	LF	495
9501-XXXX	12"PVC WATER MAIN	LF	495
9501-XXXX	VALVE BOX ADJUSTMENT	EA	1
9501-XXXX	12" GATE VALVE	EA	1
9501-XXXX	12" TIE-IN	EA	1
9501-XXXX	PIPE FITTINGS	TON	0.4
9501-XXXX	HYDROSTATIC TESTING	EA	1
9501-XXXX	2" BLOWOFF TEMPORARY	EA	1
9501-XXXX	TRENCH COMPLETION CONDITION "B"	SY	220
9501-XXXX	RECYCLED WATER VAULT RECONSTRUCTION	EA	1

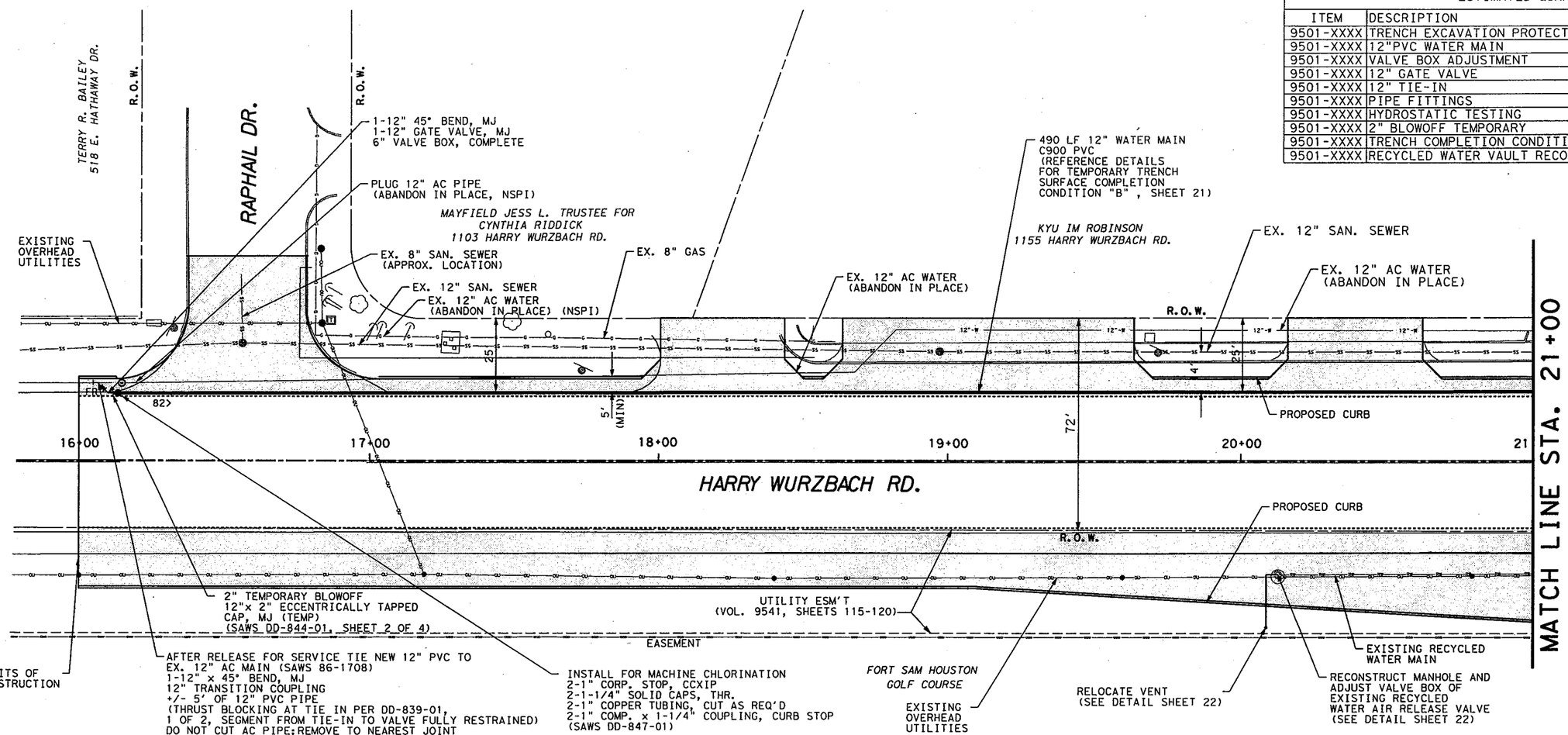

GRAPHIC SCALE

0' 20' 40'

1" =40' (11" X 17")
1" =20' (FULL SIZE)

AT&T NOTE
THE EXISTENCE AND LOCATION OF UNDERGROUND CABLE INDICATED ON THE PLANS ARE TAKEN FROM THE BEST RECORDS AVAILABLE AND ARE NOT GUARANTEED TO BE ACCURATE. CONTRACTOR SHALL CONTACT THE TEXAS STATE WIDE ONE CALL LOCATOR NUMBER 1-800-344-8377 48 HOURS PRIOR TO EXCAVATION. CONTRACTOR IS TO PROTECT AND SUPPORT TELEPHONE COMPANY PLANT DURING CONSTRUCTION.

CPS NOTE
CALL THE TEXAS STATE WIDE ONE CALL LOCATOR NUMBER 1-800-344-8377, 48 HOURS BEFORE BEGINNING ANY EXCAVATION.
DUE TO FEDERAL REGULATIONS TITLE 49. PART 192-181, CPS MUST MAINTAIN ACCESS TO GAS VALVES AT ALL TIMES. THE CONTRACTOR MUST PROTECT AND WORK AROUND ANY GAS VALVES THAT ARE IN THE PROJECT AREA.

SAWS NOTE
THE LOCATION AND DEPTH OF EXISTING WATER MAINS AND SERVICES SHOWN ON THE PLANS ARE APPROXIMATE ONLY. ACTUAL LOCATION AND DEPTHS MUST BE VERIFIED BY THE CONTRACTOR 48 HOURS PRIOR TO BEGINNING CONSTRUCTION BY CALLING THE SAWS WATER LINE LOCATOR AT 704-7811. THE CONTRACTOR SHOULD EXERCISE EXTREME CAUTION WHEN WORKING NEAR EXISTING WATER FACILITIES AND, SHOULD THEY BE DAMAGED DURING CONSTRUCTION OPERATIONS, THE CONTRACTOR WILL BE REQUIRED TO REIMBURSE THE SAWS FOR THE TOTAL COST TO REPAIR OR REPLACE THE DAMAGED FACILITIES.

TRENCH EXCAVATION SAFETY PROTECTION
CONTRACTOR AND/OR CONTRACTOR'S INDEPENDENTLY RETAINED EMPLOYEE OR STRUCTURAL DESIGN/GEOTECHNICAL/SAFETY/EQUIPMENT CONSULTANT, IF ANY SHALL REVIEW THESE PLANS AND AVAILABLE GEOTECHNICAL INFORMATION AND THE ANTICIPATED INSTALLATION SITE(S) WITHIN THE PROJECT WORK AREA IN ORDER TO IMPLEMENT CONTRACTOR'S TRENCH EXCAVATION SAFETY SYSTEMS, PROGRAMS AND/OR PROCEDURES. THE CONTRACTOR'S IMPLEMENTATION OF THE SYSTEMS, PROGRAMS AND/OR EXCAVATION SAFETY PROTECTION WITH AS A MINIMUM OSHA STANDARDS FOR TRENCH EXCAVATIONS, SPECIFICALLY, CONTRACTOR AND/OR CONTRACTOR'S INDEPENDENTLY RETAINED EMPLOYEE OF SAFETY CONSULTANT SHALL IMPLEMENT A TRENCH SAFETY PROGRAM IN ACCORDANCE WITH OSHA STANDARDS GOVERNING THE PRESENCE AND ACTIVITIES OF INDIVIDUALS WORKING IN AND AROUND TRENCH EXCAVATION.

NOTES:

1. UTILITIES SHOWN ARE APPROXIMATE. CONTRACTOR TO VERIFY POSITION AND DEPTH OF ALL CROSSINGS AND TIE-INS PRIOR TO CONSTRUCTION AND MAKE ADJUSTMENTS AS NECESSARY TO MAINTAIN A 2' CLEARANCE (MIN) BETWEEN UTILITIES AND COMPLY WITH TCEQ REQUIRED SEPARATION DISTANCES.

2. ALL 8" AND 12" PVC PIPE TO BE C-900.

3. ALL TRENCH COMPLETION THIS SHEET PER CONDITION "B" (NSPI), SHEET 21 UNLESS OTHERWISE NOTED.

CHLORINATION NOTE
SAWS TO MACHINE CHLORINATE NEW WATER MAINS WHERE MAIN LENGTH > 800 FEET; CONTRACTOR TO CHLORINATE MAINS WHERE LENGTH < 800 FEET WITH HTH.

ASBESTOS NOTE
ASBESTOS CEMENT (AC) PIPE, ALSO KNOWN AS TRANSITE PIPE, AND WHICH IS KNOWN TO BE AN ASBESTOS-CONTAINING MATERIAL (ACM), IS LOCATED WITHIN THE PROJECT LIMITS. SPECIAL WASTE MANAGEMENT PROCEDURES AND HEALTH AND SAFETY REQUIREMENTS WILL BE APPLICABLE WHEN REMOVAL AND/OR DISTURBANCE OF THIS PIPE OCCUR. PAYMENT FOR SUCH WORK IS TO BE MADE UNDER SPECIAL SPECIFICATION FOR HANDLING AND DISPOSAL OF ASBESTOS CEMENT PIPE.

PIPE RESTRAINT

#> RESTRAINED LENGTH (FT)/ DIRECTION FROM FITTING

FR FULLY RESTRAINED BETWEEN FITTINGS

BY OTHERS
- SAW CUT
- RECONSTRUCTED ROADWAY

ASPHALT LEVEL-UP AND OVERLAY BETWEEN RECONSTRUCTED SHOULDERS

LEGEND

PROPOSED UTILITIES: (SOLID/BOLD)
- WATER MAIN
- WATER SERVICE (SIZE/TYPE AS NOTED)

EXISTING UTILITIES: (OPEN/SHADED)
- WATER MAIN
- GAS MAIN
- SAN. SEWER/MANHOLE
- STORM SEWER
- OVERHEAD UTIL./POLE
- FIBEROPTIC CABLE

STATE OF TEXAS
STACEY L. WEICHERT
84036
LICENSED
PROFESSIONAL ENGINEER
3-8-11

Lockwood, Andrews & Newnam, Inc.
A LEO A DALY COMPANY
REGISTRATION NO# 2014

SAN ANTONIO WATER SYSTEM

FT. SAM HOUSTON TRANSPORTATION PROJECT

HARRY WURZBACH RD. AT BURR RD.

SAWS JOB NO. 08-5055

©2011
Texas Department of Transportation

SHEET 5 OF 22

DESIGNED:	FED. RD. DIV. NO.	STATE	PROJECT NO.			HIGHWAY NO.
CHECKED:	6	TEXAS				HARRY WURZBACH
DRAWN:	STATE DIST.	COUNTY	CONTROL NO.	SECTION NO.	JOB NO.	SHEET NO.
CHECKED:	SAT	BEXAR				256

I:\160-10240-009\4-0-production\4-01-drawings\plan sheets\water\90% submittal\04-Burr01.dgn 3/8/2011 6:05:17 PM

AT&T NOTE
THE EXISTENCE AND LOCATION OF UNDERGROUND CABLE INDICATED ON THE PLANS ARE TAKEN FROM THE BEST RECORDS AVAILABLE AND ARE NOT GUARANTEED TO BE ACCURATE. CONTRACTOR SHALL CONTACT THE TEXAS STATE WIDE ONE CALL LOCATOR NUMBER 1-800-344-8377 48 HOURS PRIOR TO EXCAVATION. CONTRACTOR IS TO PROTECT AND SUPPORT TELEPHONE COMPANY PLANT DURING CONSTRUCTION.

CPS NOTE
CALL THE TEXAS STATE WIDE ONE CALL LOCATOR NUMBER 1-800-344-8377, 48 HOURS BEFORE BEGINNING ANY EXCAVATION.
DUE TO FEDERAL REGULATIONS TITLE 49. PART 192-181, CPS MUST MAINTAIN ACCESS TO GAS VALVES AT ALL TIMES. THE CONTRACTOR MUST PROTECT AND WORK AROUND ANY GAS VALVES THAT ARE IN THE PROJECT AREA.

ASBESTOS NOTE
ASBESTOS CEMENT (AC) PIPE, ALSO KNOWN AS TRANSITE PIPE, AND WHICH IS KNOWN TO BE AN ASBESTOS-CONTAINING MATERIAL (ACM), IS LOCATED WITHIN THE PROJECT LIMITS. SPECIAL WASTE MANAGEMENT PROCEDURES AND HEALTH AND SAFETY REQUIREMENTS WILL BE APPLICABLE WHEN REMOVAL AND/OR DISTURBANCE OF THIS PIPE OCCUR. PAYMENT FOR SUCH WORK IS TO BE MADE UNDER SPECIAL SPECIFICATION FOR HANDLING AND DISPOSAL OF ASBESTOS CEMENT PIPE.

CHLORINATION NOTE
SAWS TO MACHINE CHLORINATE NEW WATER MAINS WHERE MAIN LENGTH > 800 FEET, CONTRACTOR TO CHLORINATE MAINS WHERE LENGTH < 800 FEET WITH HTH.

ESTIMATED QUANTITIES

ITEM	DESCRIPTION	UNITS	QUANTITY
9501-XXXX	TRENCH EXCAVATION PROTECTION	LF	420
9501-XXXX	8"PVC WATER MAIN (RESTRAINED)	LF	20
9501-XXXX	12"PVC WATER MAIN	LF	400
9501-XXXX	VALVE BOX ADJUSTMENT	EA	2
9501-XXXX	12" GATE VALVE	EA	1
9501-XXXX	8" TIE-IN	EA	1
9501-XXXX	PIPE FITTINGS	TON	0.4
9501-XXXX	TRENCH COMPLETION CONDITION "B"	SY	190
9501-XXXX	RECYCLED WATER VAULT RECONSTRUCTION	EA	1

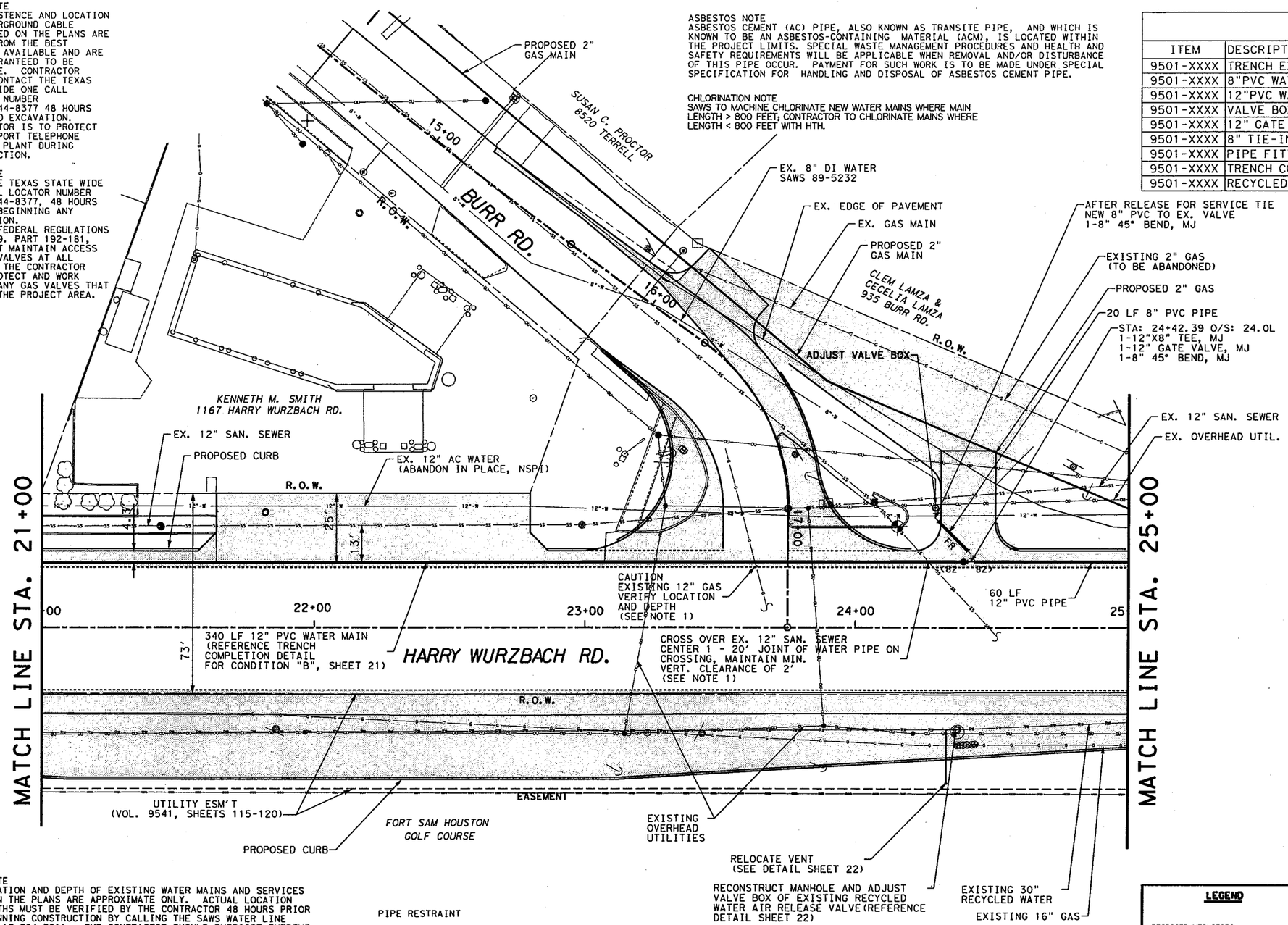

GRAPHIC SCALE
0' 20' 40'
1" =40' (11" X 17")
1" =20' (FULL SIZE)

SAWS NOTE
THE LOCATION AND DEPTH OF EXISTING WATER MAINS AND SERVICES SHOWN ON THE PLANS ARE APPROXIMATE ONLY. ACTUAL LOCATION AND DEPTHS MUST BE VERIFIED BY THE CONTRACTOR 48 HOURS PRIOR TO BEGINNING CONSTRUCTION BY CALLING THE SAWS WATER LINE LOCATOR AT 704-7811. THE CONTRACTOR SHOULD EXERCISE EXTREME CAUTION WHEN WORKING NEAR EXISTING WATER FACILITIES AND, SHOULD THEY BE DAMAGED DURING CONSTRUCTION OPERATIONS, THE CONTRACTOR WILL BE REQUIRED TO REIMBURSE THE SAWS FOR THE TOTAL COST TO REPAIR OR REPLACE THE DAMAGED FACILITIES.

TRENCH EXCAVATION SAFETY PROTECTION
CONTRACTOR AND/OR CONTRACTOR'S INDEPENDENTLY RETAINED EMPLOYEE OR STRUCTURAL DESIGN/GEOTECHNICAL/SAFETY/EQUIPMENT CONSULTANT, IF ANY SHALL REVIEW THESE PLANS AND AVAILABLE GEOTECHNICAL INFORMATION AND THE ANTICIPATED INSTALLATION SITE(S) WITHIN THE PROJECT WORK AREA IN ORDER TO IMPLEMENT CONTRACTOR'S TRENCH EXCAVATION SAFETY SYSTEMS, PROGRAMS AND/OR PROCEDURES. THE CONTRACTOR'S IMPLEMENTATION OF THE SYSTEMS, PROGRAMS AND/OR EXCAVATION SAFETY PROTECTION WITH AS A MINIMUM OSHA STANDARDS FOR TRENCH EXCAVATIONS, SPECIFICALLY, CONTRACTOR AND/OR CONTRACTOR'S INDEPENDENTLY RETAINED EMPLOYEE OF SAFETY CONSULTANT SHALL IMPLEMENT A TRENCH SAFETY PROGRAM IN ACCORDANCE WITH OSHA STANDARDS GOVERNING THE PRESENCE AND ACTIVITIES OF INDIVIDUALS WORKING IN AND AROUND TRENCH EXCAVATION.

PIPE RESTRAINT

#> RESTRAINED LENGTH (FT)/ DIRECTION FROM FITTING

FR FULLY RESTRAINED BETWEEN FITTINGS

NOTES:

1. UTILITIES SHOWN ARE APPROXIMATE. CONTRACTOR TO VERIFY POSITION AND DEPTH OF ALL CROSSINGS AND TIE-INS PRIOR TO CONSTRUCTION AND MAKE ADJUSTMENTS AS NECESSARY TO MAINTAIN A 2' CLEARANCE (MIN) BETWEEN UTILITIES AND COMPLY WITH TCEQ REQUIRED SEPARATION DISTANCES.
2. ALL 8" AND 12" PVC PIPE TO BE C-900.
3. ALL TRENCH COMPLETION THIS SHEET PER CONDITION "B", SHEET 21 UNLESS OTHERWISE NOTED.

BY OTHERS
SAW CUT
RECONSTRUCTED ROADWAY
ASPHALT LEVEL-UP AND OVERLAY BETWEEN RECONSTRUCTED SHOULDERS

LEGEND

PROPOSED UTILITIES: (SOLID/BOLD)
WATER MAIN
WATER SERVICE (SIZE/TYPE AS NOTED)

EXISTING UTILITIES: (OPEN/SHADED)
WATER MAIN
GAS MAIN
SAN. SEWER/MANHOLE
STORM SEWER
OVERHEAD UTIL./POLE
FIBEROPTIC CABLE

Lockwood, Andrews & Newnam, Inc.
A LEO A DALY COMPANY
REGISTRATION NO# 2614

SAN ANTONIO WATER SYSTEM

FT. SAM HOUSTON TRANSPORTATION PROJECT

HARRY WURZBACH RD. AT BURR RD.

SAWS JOB NO. 08-5055

©2011 Texas Department of Transportation

SHEET 6 OF 22

DESIGNED:	FED. RD. DIV. NO.	STATE	PROJECT NO.			HIGHWAY NO.
CHECKED:	6	TEXAS				HARRY WURZBACH
DRAWN:	STATE DIST.	COUNTY	CONTROL NO.	SECTION NO.	JOB NO.	SHEET NO.
CHECKED:	SAT	BEXAR				257

I:\160-10240-009\4-0-production\4-01-drawings\plan sheets\water\90% submittal\05-Burr02.dgn 3/8/2011 6:05:18 PM

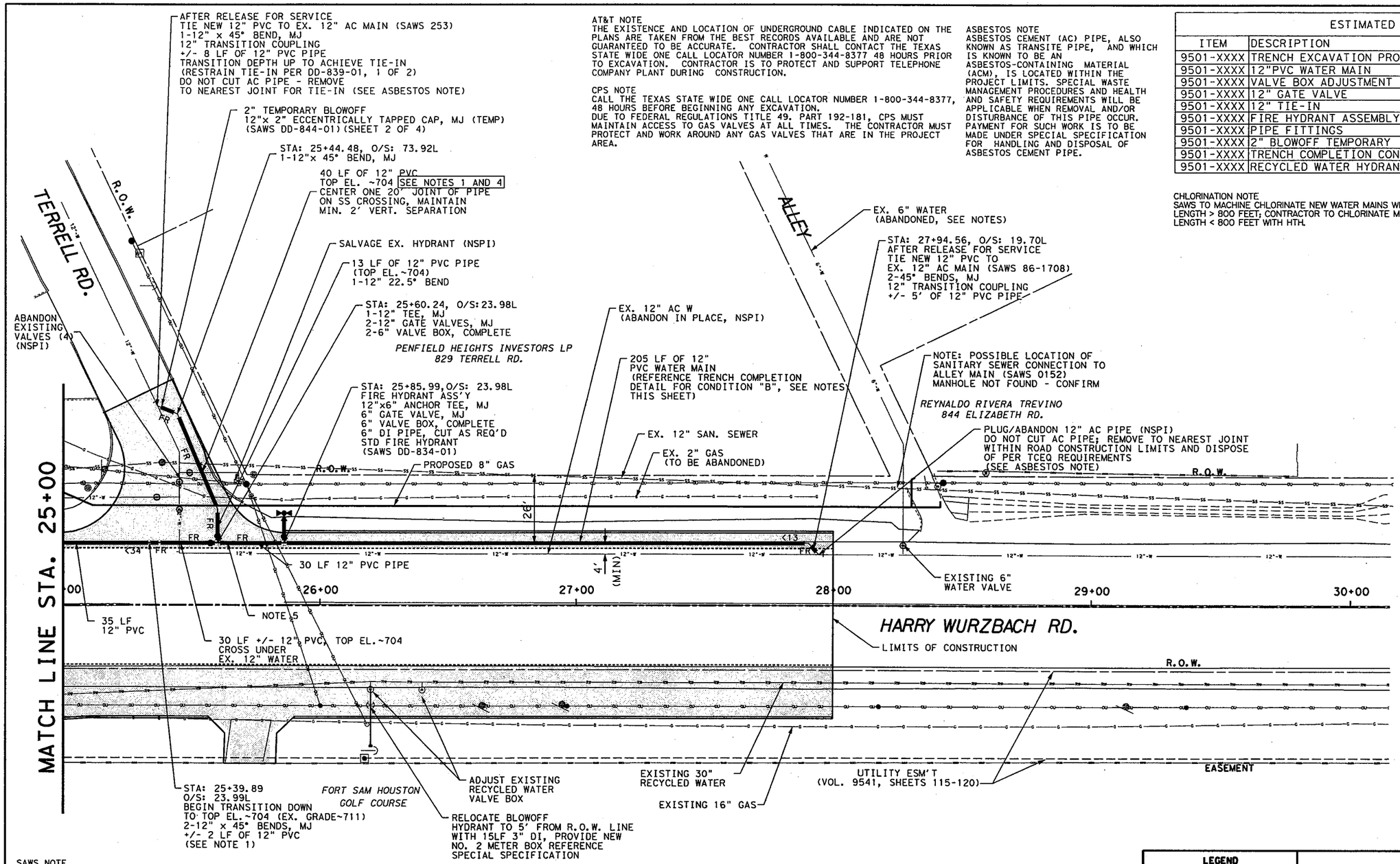

AT&T NOTE
THE EXISTENCE AND LOCATION OF UNDERGROUND CABLE INDICATED ON THE PLANS ARE TAKEN FROM THE BEST RECORDS AVAILABLE AND ARE NOT GUARANTEED TO BE ACCURATE. CONTRACTOR SHALL CONTACT THE TEXAS STATE WIDE ONE CALL LOCATOR NUMBER 1-800-344-8377 48 HOURS PRIOR TO EXCAVATION. CONTRACTOR IS TO PROTECT AND SUPPORT TELEPHONE COMPANY PLANT DURING CONSTRUCTION.

CPS NOTE
CALL THE TEXAS STATE WIDE ONE CALL LOCATOR NUMBER 1-800-344-8377, 48 HOURS BEFORE BEGINNING ANY EXCAVATION.
DUE TO FEDERAL REGULATIONS TITLE 49. PART 192-181, CPS MUST MAINTAIN ACCESS TO GAS VALVES AT ALL TIMES. THE CONTRACTOR MUST PROTECT AND WORK AROUND ANY GAS VALVES THAT ARE IN THE PROJECT AREA.

ASBESTOS NOTE
ASBESTOS CEMENT (AC) PIPE, ALSO KNOWN AS TRANSITE PIPE, AND WHICH IS KNOWN TO BE AN ASBESTOS-CONTAINING MATERIAL (ACM), IS LOCATED WITHIN THE PROJECT LIMITS. SPECIAL WASTE MANAGEMENT PROCEDURES AND HEALTH AND SAFETY REQUIREMENTS WILL BE APPLICABLE WHEN REMOVAL AND/OR DISTURBANCE OF THIS PIPE OCCUR. PAYMENT FOR SUCH WORK IS TO BE MADE UNDER SPECIAL SPECIFICATION FOR HANDLING AND DISPOSAL OF ASBESTOS CEMENT PIPE.

ESTIMATED QUANTITIES

ITEM	DESCRIPTION	UNITS	QUANTITY
9501-XXXX	TRENCH EXCAVATION PROTECTION	LF	360
9501-XXXX	12"PVC WATER MAIN	LF	360
9501-XXXX	VALVE BOX ADJUSTMENT	EA	2
9501-XXXX	12" GATE VALVE	EA	2
9501-XXXX	12" TIE-IN	EA	2
9501-XXXX	FIRE HYDRANT ASSEMBLY	EA	1
9501-XXXX	PIPE FITTINGS	TON	1.5
9501-XXXX	2" BLOWOFF TEMPORARY	EA	2
9501-XXXX	TRENCH COMPLETION CONDITION "B"	SY	160
9501-XXXX	RECYCLED WATER HYDRANT RELOCATION	EA	1

CHLORINATION NOTE
SAWS TO MACHINE CHLORINATE NEW WATER MAINS WHERE MAIN LENGTH > 800 FEET; CONTRACTOR TO CHLORINATE MAINS WHERE LENGTH < 800 FEET WITH HTH.

SAWS NOTE
THE LOCATION AND DEPTH OF EXISTING WATER MAINS AND SERVICES SHOWN ON THE PLANS ARE APPROXIMATE ONLY. ACTUAL LOCATION AND DEPTHS MUST BE VERIFIED BY THE CONTRACTOR 48 HOURS PRIOR TO BEGINNING CONSTRUCTION BY CALLING THE SAWS WATER LINE LOCATOR AT 704-7811. THE CONTRACTOR SHOULD EXERCISE EXTREME CAUTION WHEN WORKING NEAR EXISTING WATER FACILITIES AND, SHOULD THEY BE DAMAGED DURING CONSTRUCTION OPERATIONS, THE CONTRACTOR WILL BE REQUIRED TO REIMBURSE THE SAWS FOR THE TOTAL COST TO REPAIR OR REPLACE THE DAMAGED FACILITIES.

TRENCH EXCAVATION SAFETY PROTECTION
CONTRACTOR AND/OR CONTRACTOR'S INDEPENDENTLY RETAINED EMPLOYEE OR STRUCTURAL DESIGN/GEOTECHNICAL/SAFETY/EQUIPMENT CONSULTANT, IF ANY SHALL REVIEW THESE PLANS AND AVAILABLE GEOTECHNICAL INFORMATION AND THE ANTICIPATED INSTALLATION SITE(S) WITHIN THE PROJECT WORK AREA IN ORDER TO IMPLEMENT CONTRACTOR'S TRENCH EXCAVATION SAFETY SYSTEMS, PROGRAMS AND/OR PROCEDURES. THE CONTRACTOR'S IMPLEMENTATION OF THE SYSTEMS, PROGRAMS AND/OR EXCAVATION SAFETY PROTECTION WITH AS A MINIMUM OSHA STANDARDS FOR TRENCH EXCAVATIONS, SPECIFICALLY, CONTRTACTOR AND/OR CONTRACTOR'S INDEPENDENTLY RETAINED EMPLOYEE OF SAFETY CONSULTANT SHALL IMPLEMENT A TRENCH SAFETY PROGRAM IN ACCORDANCE WITH OSHA STANDARDS GOVERNING THE PRESENCE AND ACTIVITIES OF INDIVIDUALS WORKING IN AND AROUND TRENCH EXCAVATION.

NOTES:

1. UTILITIES SHOWN ARE APPROXIMATE. CONTRACTOR TO VERIFY POSITION AND DEPTH OF ALL CROSSINGS AND TIE-INS PRIOR TO CONSTRUCTION AND MAKE ADJUSTMENTS AS NECESSARY TO MAINTAIN A 2' CLEARANCE (MIN) BETWEEN UTILITIES AND COMPLY WITH TCEQ REQUIRED SEPARATION DISTANCES.
2. ALL 8" AND 12" PVC PIPE THIS SHEET TO BE C-900.
3. ALL TRENCH COMPLETION THIS SHEET PER CONDITION "B", SHEET 21.
4. SEGMENT TOP OF PIPE EL.~704
   CROSSINGS AS FOLLOWS (CONFIRM)
   BELOW PROPOSED 8" GAS
   BELOW EX 2" GAS (VERIFY DEPTH)
   ABOVE 12" SAN. SEWER (FL~700.3)
   BELOW 6" HYDRANT SVC. (FL~ 706.2)
5. NORTH OF TEE NEAR STA. 25+60 MAINTAIN PIPE ELEVATION 704 UNTIL STD. 48" COVER CAN BE RESUMED.
6. MAINS IN ALLEYS REPLACED BY MAINS IN STREETS (SAWS JOB 96-5007) - ALLEY MAINS ASSUMED TO BE ABANDONED

PIPE RESTRAINT

#> RESTRAINED LENGTH (FT)/ DIRECTION FROM FITTING

FR FULLY RESTRAINED BETWEEN FITTINGS

BY OTHERS
---------- SAW CUT
RECONSTRUCTED ROADWAY
ASPHALT LEVEL-UP AND OVERLAY BETWEEN RECONSTRUCTED SHOULDERS

LEGEND

PROPOSED UTILITIES: (SOLID/BOLD)
WATER MAIN
WATER SERVICE (SIZE/TYPE AS NOTED)

EXISTING UTILITIES: (OPEN/SHADED)
WATER MAIN
GAS MAIN
SAN. SEWER/MANHOLE
STORM SEWER
OVERHEAD UTIL./POLE
FIBEROPTIC CABLE

STATE OF TEXAS
STACEY L. WEICHERT
84036
LICENSED
PROFESSIONAL ENGINEER
3-8-11

Lockwood, Andrews & Newnam, Inc.
A LEO A DALY COMPANY
REGISTRATION NO: 2614

SAN ANTONIO WATER SYSTEM

FT. SAM HOUSTON TRANSPORTATION PROJECT

HARRY WURZBACH RD. AT BURR RD.

SAWS JOB NO. 08-5055

©2011 Texas Department of Transportation

SHEET 7 OF 22

DESIGNED:	FED. RD. DIV. NO.	STATE	PROJECT NO.			HIGHWAY NO.
CHECKED:	6	TEXAS				HARRY WURZBACH
DRAWN:	STATE DIST.	COUNTY	CONTROL NO.	SECTION NO.	JOB NO.	SHEET NO.
CHECKED:	SAT	BEXAR				258

3/8/2011 6:05:18 PM

I:\160-10240-009\4-0-production\4-01-drawings\plan sheets\water\90% submittal\06-Burr03.dgn

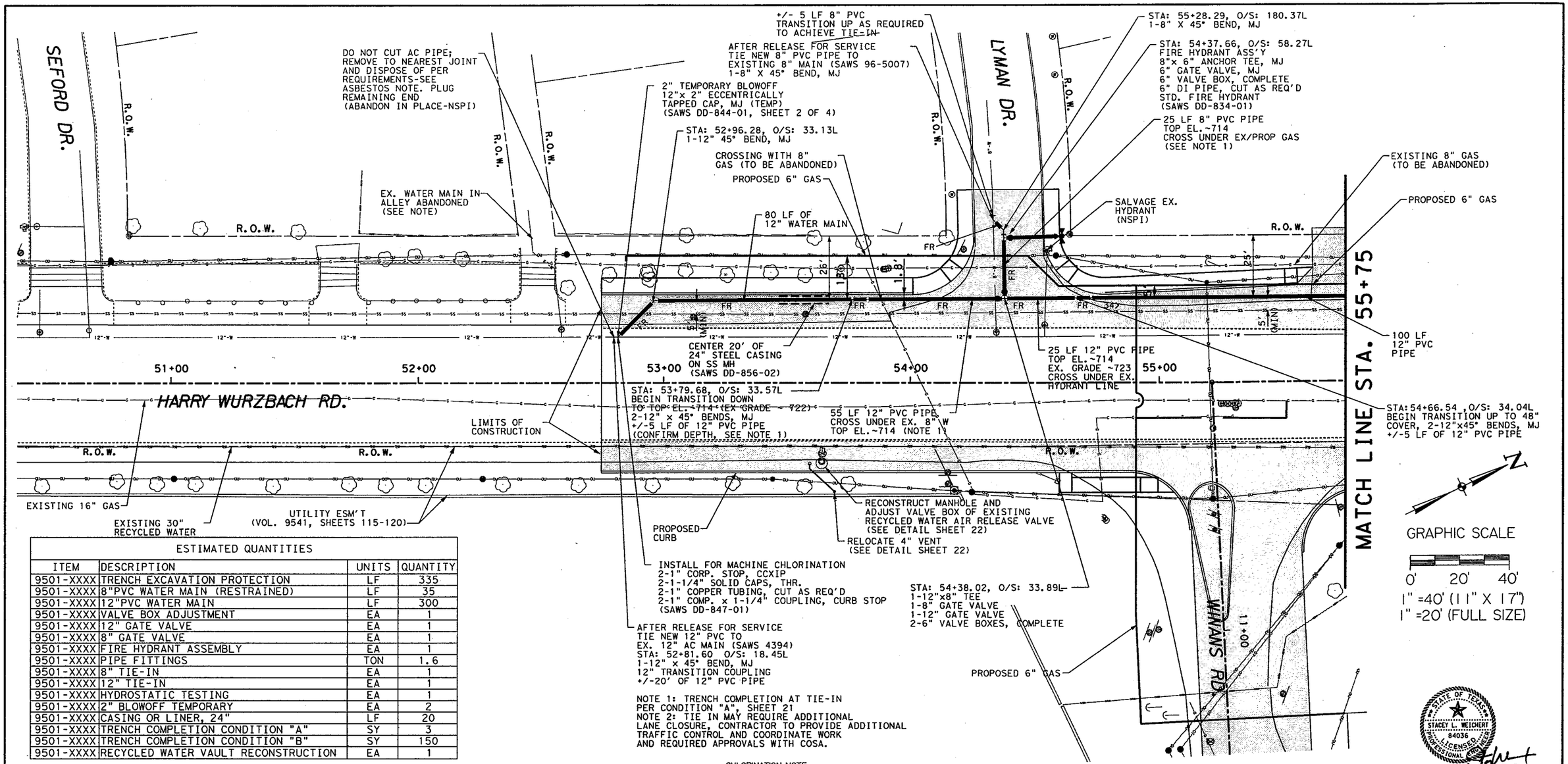

ESTIMATED QUANTITIES			
ITEM	DESCRIPTION	UNITS	QUANTITY
9501-XXXX	TRENCH EXCAVATION PROTECTION	LF	335
9501-XXXX	8"PVC WATER MAIN (RESTRAINED)	LF	35
9501-XXXX	12"PVC WATER MAIN	LF	300
9501-XXXX	VALVE BOX ADJUSTMENT	EA	1
9501-XXXX	12" GATE VALVE	EA	1
9501-XXXX	8" GATE VALVE	EA	1
9501-XXXX	FIRE HYDRANT ASSEMBLY	EA	1
9501-XXXX	PIPE FITTINGS	TON	1.6
9501-XXXX	8" TIE-IN	EA	1
9501-XXXX	12" TIE-IN	EA	1
9501-XXXX	HYDROSTATIC TESTING	EA	1
9501-XXXX	2" BLOWOFF TEMPORARY	EA	2
9501-XXXX	CASING OR LINER, 24"	LF	20
9501-XXXX	TRENCH COMPLETION CONDITION "A"	SY	3
9501-XXXX	TRENCH COMPLETION CONDITION "B"	SY	150
9501-XXXX	RECYCLED WATER VAULT RECONSTRUCTION	EA	1

NOTE 1: TRENCH COMPLETION AT TIE-IN PER CONDITION "A", SHEET 21
NOTE 2: TIE IN MAY REQUIRE ADDITIONAL LANE CLOSURE, CONTRACTOR TO PROVIDE ADDITIONAL TRAFFIC CONTROL AND COORDINATE WORK AND REQUIRED APPROVALS WITH COSA.

CHLORINATION NOTE
SAWS TO MACHINE CHLORINATE NEW WATER MAINS WHERE MAIN LENGTH > 800 FEET; CONTRACTOR TO CHLORINATE MAINS WHERE LENGTH < 800 FEET WITH HTH.

AT&T NOTE
THE EXISTENCE AND LOCATION OF UNDERGROUND CABLE INDICATED ON THE PLANS ARE TAKEN FROM THE BEST RECORDS AVAILABLE AND ARE NOT GUARANTEED TO BE ACCURATE. CONTRACTOR SHALL CONTACT THE TEXAS STATE WIDE ONE CALL LOCATOR NUMBER 1-800-344-8377 48 HOURS PRIOR TO EXCAVATION. CONTRACTOR IS TO PROTECT AND SUPPORT TELEPHONE COMPANY PLANT DURING CONSTRUCTION.

CPS NOTE
CALL THE TEXAS STATE WIDE ONE CALL LOCATOR NUMBER 1-800-344-8377, 48 HOURS BEFORE BEGINNING ANY EXCAVATION.
DUE TO FEDERAL REGULATIONS TITLE 49. PART 192-181, CPS MUST MAINTAIN ACCESS TO GAS VALVES AT ALL TIMES. THE CONTRACTOR MUST PROTECT AND WORK AROUND ANY GAS VALVES THAT ARE IN THE PROJECT AREA.

TRENCH EXCAVATION SAFETY PROTECTION
CONTRACTOR AND/OR CONTRACTOR'S INDEPENDENTLY RETAINED EMPLOYEE OR STRUCTURAL DESIGN/GEOTECHNICAL/SAFETY/EQUIPMENT CONSULTANT, IF ANY SHALL REVIEW THESE PLANS AND AVAILABLE GEOTECHNICAL INFORMATION AND THE ANTICIPATED INSTALLATION SITE(S) WITHIN THE PROJECT WORK AREA IN ORDER TO IMPLEMENT CONTRACTOR'S TRENCH EXCAVATION SAFETY SYSTEMS, PROGRAMS AND/OR PROCEDURES. THE CONTRACTOR'S IMPLEMENTATION OF THE SYSTEMS, PROGRAMS AND/OR EXCAVATION SAFETY PROTECTION WITH AS A MINIMUM OSHA STANDARDS FOR TRENCH EXCAVATIONS, SPECIFICALLY, CONTRTACTOR AND/OR CONTRACTOR'S INDEPENDENTLY RETAINED EMPLOYEE OF SAFETY CONSULTANT SHALL IMPLEMENT A TRENCH SAFETY PROGRAM IN ACCORDANCE WITH OSHA STANDARDS GOVERNING THE PRESENCE AND ACTIVITIES OF INDIVIDUALS WORKING IN AND AROUND TRENCH EXCAVATION.

PIPE RESTRAINT

#> RESTRAINED LENGTH (FT)/ DIRECTION FROM FITTING

FR FULLY RESTRAINED BETWEEN FITTINGS

ASBESTOS NOTE
ASBESTOS CEMENT (AC) PIPE, ALSO KNOWN AS TRANSITE PIPE, AND WHICH IS KNOWN TO BE AN ASBESTOS-CONTAINING MATERIAL (ACM), IS LOCATED WITHIN THE PROJECT LIMITS. SPECIAL WASTE MANAGEMENT PROCEDURES AND HEALTH AND SAFETY REQUIREMENTS WILL BE APPLICABLE WHEN REMOVAL AND/OR DISTURBANCE OF THIS PIPE OCCUR. PAYMENT FOR SUCH WORK IS TO BE MADE UNDER SPECIAL SPECIFICATION FOR HANDLING AND DISPOSAL OF ASBESTOS CEMENT PIPE.

SAWS NOTE
THE LOCATION AND DEPTH OF EXISTING WATER MAINS AND SERVICES SHOWN ON THE PLANS ARE APPROXIMATE ONLY. ACTUAL LOCATION AND DEPTHS MUST BE VERIFIED BY THE CONTRACTOR 48 HOURS PRIOR TO BEGINNING CONSTRUCTION BY CALLING THE SAWS WATER LINE LOCATOR AT 704-7811. THE CONTRACTOR SHOULD EXERCISE EXTREME CAUTION WHEN WORKING NEAR EXISTING WATER FACILITIES AND, SHOULD THEY BE DAMAGED DURING CONSTRUCTION OPERATIONS, THE CONTRACTOR WILL BE REQUIRED TO REIMBURSE THE SAWS FOR THE TOTAL COST TO REPAIR OR REPLACE THE DAMAGED FACILITIES.

NOTES:

1. UTILITIES SHOWN ARE APPROXIMATE. CONTRACTOR TO VERIFY POSITION AND DEPTH OF ALL CROSSINGS AND TIE-INS PRIOR TO CONSTRUCTION AND MAKE ADJUSTMENTS AS NECESSARY TO MAINTAIN A 2' CLEARANCE (MIN) BETWEEN UTILITIES AND COMPLY WITH TCEQ REQUIRED SEPARATION DISTANCES.
2. ALL 8" AND 12" PVC PIPE TO BE C-900.
3. ALL TRENCH COMPLETION THIS SHEET PER CONDITION "B", SHEET 21 UNLESS OTHERWISE NOTED.
4. MAINS IN ALLEYS REPLACED BY MAINS IN STREETS (SAWS JOB 96-5007) - ALLEY MAINS ASSUMED TO BE ABANDONED

BY OTHERS
---------- SAW CUT
RECONSTRUCTED ROADWAY
ASPHALT LEVEL-UP AND OVERLAY BETWEEN RECONSTRUCTED SHOULDERS

LEGEND

PROPOSED UTILITIES: (SOLID/BOLD)
WATER MAIN
WATER SERVICE (SIZE/TYPE AS NOTED)

EXISTING UTILITIES: (OPEN/SHADED)
WATER MAIN
GAS MAIN
SAN. SEWER/MANHOLE
STORM SEWER
OVERHEAD UTIL./POLE
FIBEROPTIC CABLE

STACEY L. WEICHERT 84036 LICENSED PROFESSIONAL ENGINEER STATE OF TEXAS 3-8-11

Lockwood, Andrews & Newnam, Inc.
A LEO A DALY COMPANY
REGISTRATION NO: 2614

SAN ANTONIO WATER SYSTEM

FT. SAM HOUSTON TRANSPORTATION PROJECT

HARRY WURZBACH RD. AT WINANS RD.

SAWS JOB NO. 08-5055

©2011 Texas Department of Transportation

SHEET 8 OF 22

DESIGNED:	FED. RD. DIV. NO.	STATE	PROJECT NO.			HIGHWAY NO.
CHECKED:	6	TEXAS				HARRY WURZBACH
DRAWN:	STATE DIST.	COUNTY	CONTROL NO.	SECTION NO.	JOB NO.	SHEET NO.
CHECKED:	SAT	BEXAR				259

I:\160-10240-009\4-0-production\4-01-drawings\plan sheets\water\90% submittal\07-winans01.dgn 3/8/2011 6:05:19 PM

ASBESTOS NOTE
ASBESTOS CEMENT (AC) PIPE, ALSO KNOWN AS TRANSITE PIPE, AND WHICH IS KNOWN TO BE AN ASBESTOS-CONTAINING MATERIAL (ACM), IS LOCATED WITHIN THE PROJECT LIMITS. SPECIAL WASTE MANAGEMENT PROCEDURES AND HEALTH AND SAFETY REQUIREMENTS WILL BE APPLICABLE WHEN REMOVAL AND/OR DISTURBANCE OF THIS PIPE OCCUR. PAYMENT FOR SUCH WORK IS TO BE MADE UNDER SPECIAL SPECIFICATION FOR HANDLING AND DISPOSAL OF ASBESTOS CEMENT PIPE.

ESTIMATED QUANTITIES

ITEM	DESCRIPTION	UNITS	QUANTITY
9501-XXXX	TRENCH EXCAVATION PROTECTION	LF	445
9501-XXXX	8"PVC WATER MAIN (RESTRAINED)	LF	20
9501-XXXX	12"PVC WATER MAIN	LF	425
9501-XXXX	VALVE BOX ADJUSTMENT	EA	1
9501-XXXX	8" GATE VALVE	EA	1
9501-XXXX	12" GATE VALVE	EA	1
9501-XXXX	PIPE FITTINGS	TON	1.1
9501-XXXX	8" TIE-IN	EA	1
9501-XXXX	CASING OR LINER, 24"	LF	20
9501-XXXX	TRENCH COMPLETION CONDITION "B"	SY	200

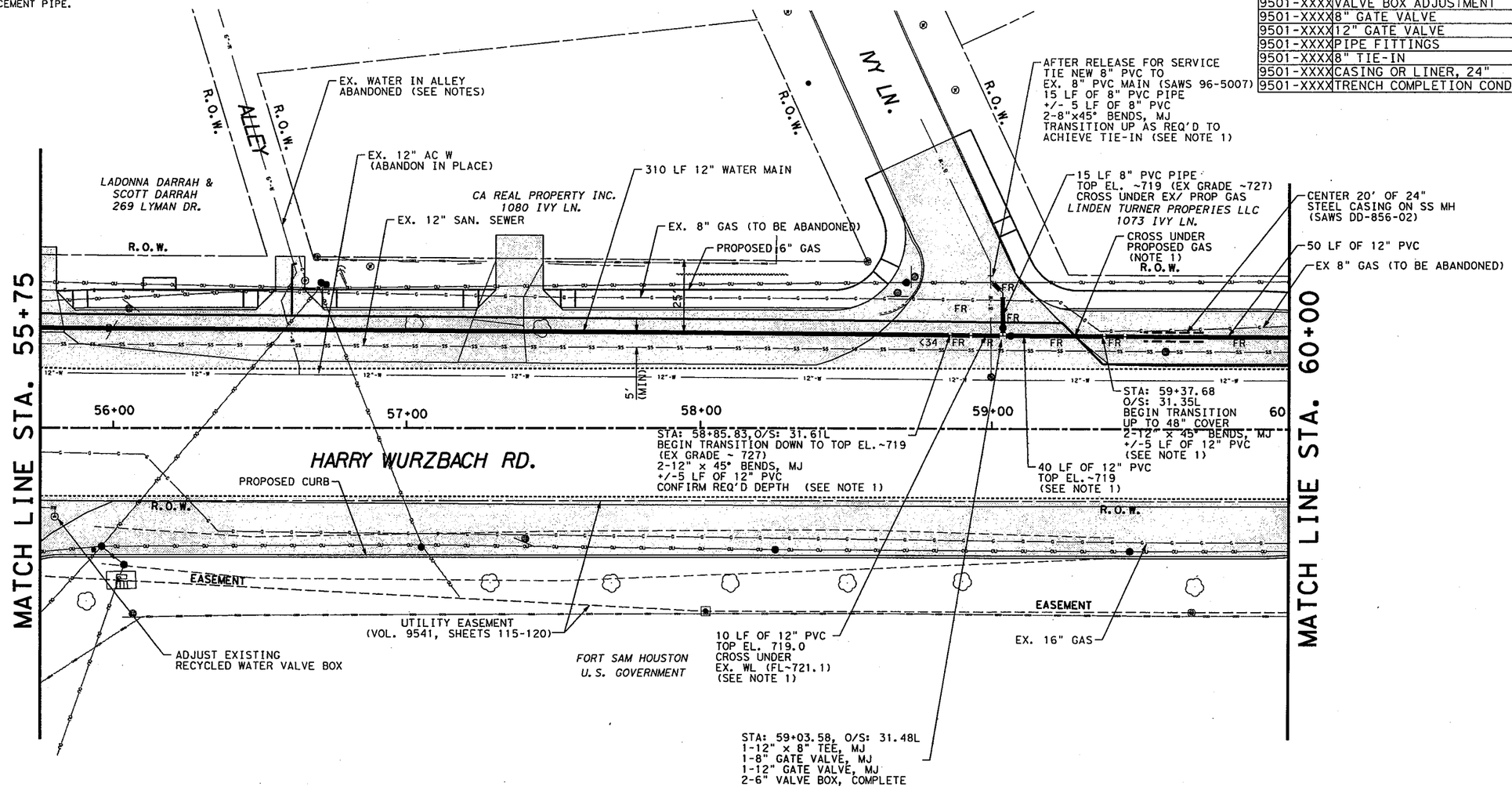

AT&T NOTE
THE EXISTENCE AND LOCATION OF UNDERGROUND CABLE INDICATED ON THE PLANS ARE TAKEN FROM THE BEST RECORDS AVAILABLE AND ARE NOT GUARANTEED TO BE ACCURATE. CONTRACTOR SHALL CONTACT THE TEXAS STATE WIDE ONE CALL LOCATOR NUMBER 1-800-344-8377 48 HOURS PRIOR TO EXCAVATION. CONTRACTOR IS TO PROTECT AND SUPPORT TELEPHONE COMPANY PLANT DURING CONSTRUCTION.

CPS NOTE
CALL THE TEXAS STATE WIDE ONE CALL LOCATOR NUMBER 1-800-344-8377, 48 HOURS BEFORE BEGINNING ANY EXCAVATION.
DUE TO FEDERAL REGULATIONS TITLE 49. PART 192-181, CPS MUST MAINTAIN ACCESS TO GAS VALVES AT ALL TIMES. THE CONTRACTOR MUST PROTECT AND WORK AROUND ANY GAS VALVES THAT ARE IN THE PROJECT AREA.

TRENCH EXCAVATION SAFETY PROTECTION
CONTRACTOR AND/OR CONTRACTOR'S INDEPENDENTLY RETAINED EMPLOYEE OR STRUCTURAL DESIGN/GEOTECHNICAL/SAFETY/EQUIPMENT CONSULTANT, IF ANY SHALL REVIEW THESE PLANS AND AVAILABLE GEOTECHNICAL INFORMATION AND THE ANTICIPATED INSTALLATION SITE(S) WITHIN THE PROJECT WORK AREA IN ORDER TO IMPLEMENT CONTRACTOR'S TRENCH EXCAVATION SAFETY SYSTEMS, PROGRAMS AND/OR PROCEDURES. THE CONTRACTOR'S IMPLEMENTATION OF THE SYSTEMS, PROGRAMS AND/OR EXCAVATION SAFETY PROTECTION WITH AS A MINIMUM OSHA STANDARDS FOR TRENCH EXCAVATIONS, SPECIFICALLY, CONTRTACTOR AND/OR CONTRACTOR'S INDEPENDENTLY RETAINED EMPLOYEE OF SAFETY CONSULTANT SHALL IMPLEMENT A TRENCH SAFETY PROGRAM IN ACCORDANCE WITH OSHA STANDARDS GOVERNING THE PRESENCE AND ACTIVITIES OF INDIVIDUALS WORKING IN AND AROUND TRENCH EXCAVATION.

PIPE RESTRAINT

#> RESTRAINED LENGTH (FT)/ DIRECTION FROM FITTING

FR FULLY RESTRAINED BETWEEN FITTINGS

SAWS NOTE
THE LOCATION AND DEPTH OF EXISTING WATER MAINS AND SERVICES SHOWN ON THE PLANS ARE APPROXIMATE ONLY. ACTUAL LOCATION AND DEPTHS MUST BE VERIFIED BY THE CONTRACTOR 48 HOURS PRIOR TO BEGINNING CONSTRUCTION BY CALLING THE SAWS WATER LINE LOCATOR AT 704-7811. THE CONTRACTOR SHOULD EXERCISE EXTREME CAUTION WHEN WORKING NEAR EXISTING WATER FACILITIES AND, SHOULD THEY BE DAMAGED DURING CONSTRUCTION OPERATIONS, THE CONTRACTOR WILL BE REQUIRED TO REIMBURSE THE SAWS FOR THE TOTAL COST TO REPAIR OR REPLACE THE DAMAGED FACILITIES.

CHLORINATION NOTE
SAWS TO MACHINE CHLORINATE NEW WATER MAINS WHERE MAIN LENGTH > 800 FEET; CONTRACTOR TO CHLORINATE MAINS WHERE LENGTH < 800 FEET WITH HTH.

NOTES:

1. UTILITIES SHOWN ARE APPROXIMATE. CONTRACTOR TO VERIFY POSITION AND DEPTH OF ALL CROSSINGS AND TIE-INS PRIOR TO CONSTRUCTION AND MAKE ADJUSTMENTS AS NECESSARY TO MAINTAIN A 2' CLEARANCE (MIN) BETWEEN UTILITIES AND COMPLY WITH TCEQ REQUIRED SEPARATION DISTANCES.
2. ALL 8" AND 12" PVC PIPE TO BE C-900.
3. ALL TRENCH COMPLETION THIS SHEET PER CONDITION "B", SHEET 21 UNLESS OTHERWISE NOTED.
4. ALL 8" PIPE TO BE FULLY RESTRAINED.
5. MAINS IN ALLEYS REPLACED BY MAINS IN STREETS (SAWS JOB 96-5007) - ALLEY MAINS ASSUMED TO BE ABANDONED

SAW CUT

BY OTHERS — RECONSTRUCTED ROADWAY

ASPHALT LEVEL-UP AND OVERLAY BETWEEN RECONSTRUCTED SHOULDERS

LEGEND

PROPOSED UTILITIES: (SOLID/BOLD)
WATER MAIN
WATER SERVICE (SIZE/TYPE AS NOTED)

EXISTING UTILITIES: (OPEN/SHADED)
WATER MAIN
GAS MAIN
SAN. SEWER/MANHOLE
STORM SEWER
OVERHEAD UTIL./POLE
FIBEROPTIC CABLE

STATE OF TEXAS STACEY L. WEICHERT 84036 LICENSED PROFESSIONAL ENGINEER
3-8-11

Lockwood, Andrews & Newnam, Inc.
A LEO A DALY COMPANY
REGISTRATION NO: 2614

SAN ANTONIO WATER SYSTEM

FT. SAM HOUSTON TRANSPORTATION PROJECT

HARRY WURZBACH RD. AT WINANS RD.

SAWS JOB NO. 08-5055

©2011 Texas Department of Transportation

SHEET 9 OF 22

DESIGNED:	FED. RD. DIV. NO.	STATE	PROJECT NO.			HIGHWAY NO.
CHECKED:	6	TEXAS				HARRY WURZBACH
DRAWN:	STATE DIST.	COUNTY	CONTROL NO.	SECTION NO.	JOB NO.	SHEET NO.
CHECKED:	SAT	BEXAR				260

I:\160-10240-009\4-0-production\4-01-drawings\plan sheets\water\90% submittal\08-Winans02.dgn 3/8/2011 6:05:19 PM

CHLORINATION NOTE

SAWS TO MACHINE CHLORINATE NEW WATER MAINS WHERE MAIN LENGTH > 800 FEET; CONTRACTOR TO CHLORINATE MAINS WHERE LENGTH < 800 FEET WITH HTH.

ESTIMATED QUANTITIES			
ITEM	DESCRIPTION	UNITS	QUANTITY
9501-XXXX	TRENCH EXCAVATION PROTECTION	LF	565
9501-XXXX	8"PVC WATER MAIN (RESTRAINED)	LF	120
9501-XXXX	12"PVC WATER MAIN	LF	445
9501-XXXX	RELAY 3/4" LONG SERVICE	EA	1
9501-XXXX	RELAY 1" SHORT SERVICE	EA	1
9501-XXXX	8" GATE VALVE	EA	1
9501-XXXX	12" GATE VALVE	EA	1
9501-XXXX	FIRE HYDRANT ASSEMBLY	EA	1
9501-XXXX	PIPE FITTINGS	TON	1.4
9501-XXXX	8" TIE-IN	EA	1
9501-XXXX	TRENCH COMPLETION CONDITION "A"	SY	120
9501-XXXX	TRENCH COMPLETION CONDITION "B"	SY	140
9501-XXXX	2" BLOWOFF TEMPORARY	EA	1

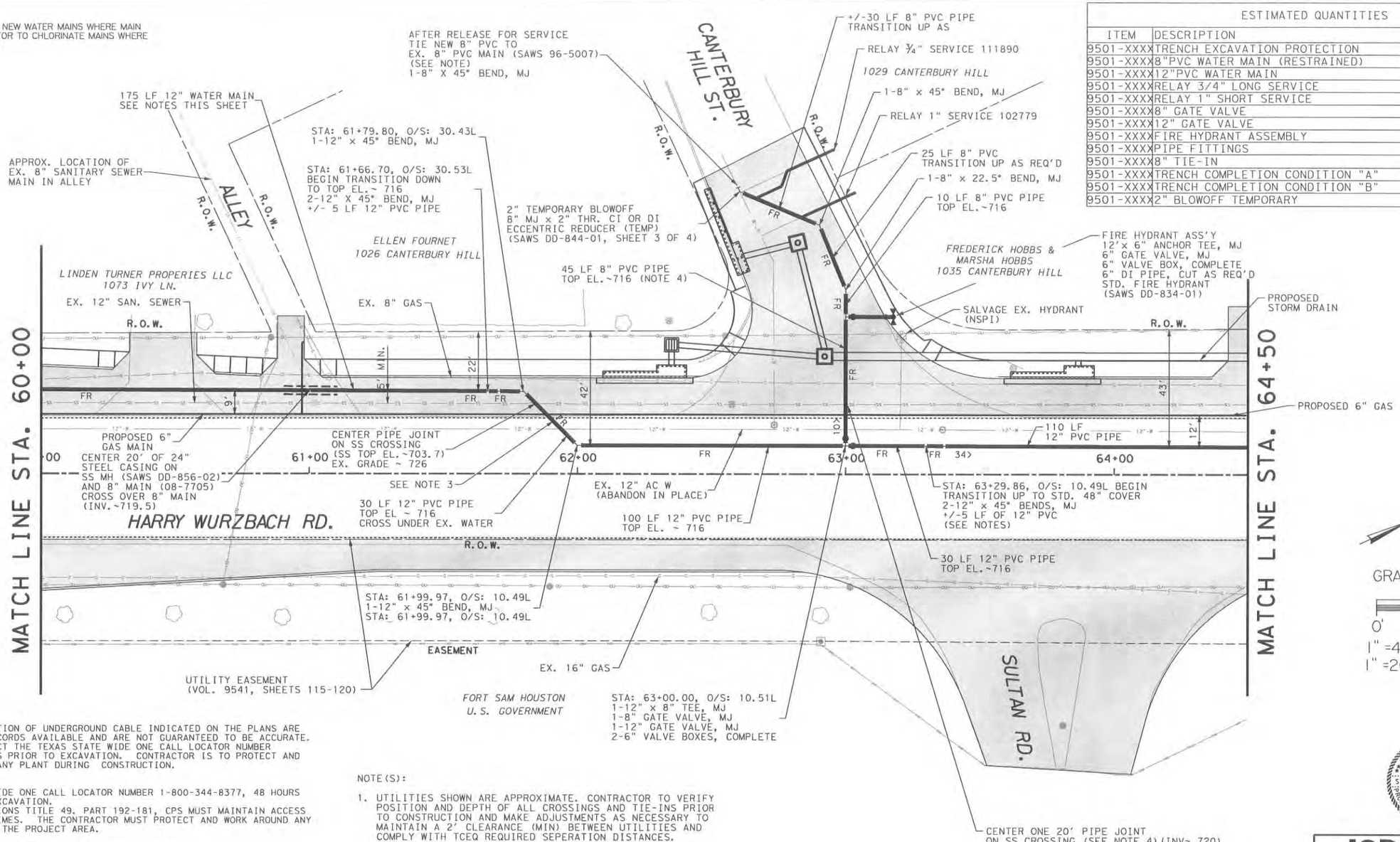

AT&T NOTE
THE EXISTENCE AND LOCATION OF UNDERGROUND CABLE INDICATED ON THE PLANS ARE TAKEN FROM THE BEST RECORDS AVAILABLE AND ARE NOT GUARANTEED TO BE ACCURATE. CONTRACTOR SHALL CONTACT THE TEXAS STATE WIDE ONE CALL LOCATOR NUMBER 1-800-344-8377 48 HOURS PRIOR TO EXCAVATION. CONTRACTOR IS TO PROTECT AND SUPPORT TELEPHONE COMPANY PLANT DURING CONSTRUCTION.

CPS NOTE
CALL THE TEXAS STATE WIDE ONE CALL LOCATOR NUMBER 1-800-344-8377, 48 HOURS BEFORE BEGINNING ANY EXCAVATION.
DUE TO FEDERAL REGULATIONS TITLE 49. PART 192-181, CPS MUST MAINTAIN ACCESS TO GAS VALVES AT ALL TIMES. THE CONTRACTOR MUST PROTECT AND WORK AROUND ANY GAS VALVES THAT ARE IN THE PROJECT AREA.

TRENCH EXCAVATION SAFETY PROTECTION
CONTRACTOR AND/OR CONTRACTOR'S INDEPENDENTLY RETAINED EMPLOYEE OR STRUCTURAL DESIGN/GEOTECHNICAL/SAFETY/EQUIPMENT CONSULTANT, IF ANY SHALL REVIEW THESE PLANS AND AVAILABLE GEOTECHNICAL INFORMATION AND THE ANTICIPATED INSTALLATION SITE(S) WITHIN THE PROJECT WORK AREA IN ORDER TO IMPLEMENT CONTRACTOR'S TRENCH EXCAVATION SAFETY SYSTEMS, PROGRAMS AND/OR PROCEDURES. THE CONTRACTOR'S IMPLEMENTATION OF THE SYSTEMS, PROGRAMS AND/OR EXCAVATION SAFETY PROTECTION WITH AS A MINIMUM OSHA STANDARDS FOR TRENCH EXCAVATIONS, SPECIFICALLY, CONTRTACTOR AND/OR CONTRACTOR'S INDEPENDENTLY RETAINED EMPLOYEE OF SAFETY CONSULTANT SHALL IMPLEMENT A TRENCH SAFETY PROGRAM IN ACCORDANCE WITH OSHA STANDARDS GOVERNING THE PRESENCE AND ACTIVITIES OF INDIVIDUALS WORKING IN AND AROUND TRENCH EXCAVATION.

SAWS NOTE
THE LOCATION AND DEPTH OF EXISTING WATER MAINS AND SERVICES SHOWN ON THE PLANS ARE APPROXIMATE ONLY. ACTUAL LOCATION AND DEPTHS MUST BE VERIFIED BY THE CONTRACTOR 48 HOURS PRIOR TO BEGINNING CONSTRUCTION BY CALLING THE SAWS WATER LINE LOCATOR AT 704-7811. THE CONTRACTOR SHOULD EXERCISE EXTREME CAUTION WHEN WORKING NEAR EXISTING WATER FACILITIES AND, SHOULD THEY BE DAMAGED DURING CONSTRUCTION OPERATIONS, THE CONTRACTOR WILL BE REQUIRED TO REIMBURSE THE SAWS FOR THE TOTAL COST TO REPAIR OR REPLACE THE DAMAGED FACILITIES.

ASBESTOS NOTE
ASBESTOS CEMENT (AC) PIPE, ALSO KNOWN AS TRANSITE PIPE, AND WHICH IS KNOWN TO BE AN ASBESTOS-CONTAINING MATERIAL (ACM), IS LOCATED WITHIN THE PROJECT LIMITS. SPECIAL WASTE MANAGEMENT PROCEDURES AND HEALTH AND SAFETY REQUIREMENTS WILL BE APPLICABLE WHEN REMOVAL AND/OR DISTURBANCE OF THIS PIPE OCCUR. PAYMENT FOR SUCH WORK IS TO BE MADE UNDER SPECIAL SPECIFICATION FOR HANDLING AND DISPOSAL OF ASBESTOS CEMENT PIPE.

NOTE(S):

1. UTILITIES SHOWN ARE APPROXIMATE. CONTRACTOR TO VERIFY POSITION AND DEPTH OF ALL CROSSINGS AND TIE-INS PRIOR TO CONSTRUCTION AND MAKE ADJUSTMENTS AS NECESSARY TO MAINTAIN A 2' CLEARANCE (MIN) BETWEEN UTILITIES AND COMPLY WITH TCEQ REQUIRED SEPERATION DISTANCES.
2. ALL 8" AND 12" PVC PIPE TO BE C900.
3. ALL TRENCH COMPLETION THIS SHEET WITHIN SHADED AREAS PER CONDITION "B", SHEET 21; OTHER AREAS PER CONDITION "A".
4. SEGMENT TOP OF PIPE EL.~716
   CONFIRM THE LOCATION OF THE FOLLOWING UTILITIES AND CROSS AS DESCRIBED BELOW:
   BELOW EX. 12" WATER (FL~719.8)
   ABOVE EX. 12" SAN. SEWER (FL~703.0)
   BELOW EX. 8" GAS (FL~721.3)
   BELOW PROP. 48" RCP STORM (FL~720)

PIPE RESTRAINT

#> RESTRAINED LENGTH (FT)/ DIRECTION FROM FITTING

FR FULLY RESTRAINED BETWEEN FITTINGS

BY OTHERS — SAW CUT; RECONSTRUCTED ROADWAY

ASPHALT LEVEL-UP AND OVERLAY BETWEEN RECONSTRUCTED SHOULDERS

LEGEND

PROPOSED UTILITIES: (SOLID/BOLD)
WATER MAIN
WATER SERVICE (SIZE/TYPE AS NOTED)

EXISTING UTILITIES: (OPEN/SHADED)
WATER MAIN
GAS MAIN
SAN. SEWER/MANHOLE
STORM SEWER
OVERHEAD UTIL./POLE
FIBEROPTIC CABLE

STATE OF TEXAS — STACEY L. WEICHERT 84036 — LICENSED PROFESSIONAL ENGINEER — 5-6-11

Lockwood, Andrews & Newnam, Inc. — A LEO A DALY COMPANY — REGISTRATION NO: 2614

SAN ANTONIO WATER SYSTEM

FT. SAM HOUSTON TRANSPORTATION PROJECT

HARRY WURZBACH RD. AT WINANS RD.

SAWS JOB NO. 08-5055

©2011 Texas Department of Transportation

SHEET 10 OF 22

DESIGNED:	FED. RD. DIV. NO.	STATE	PROJECT NO.			HIGHWAY NO.
CHECKED:	6	TEXAS				HARRY WURZBACH
DRAWN:	STATE DIST.	COUNTY	CONTROL NO.	SECTION NO.	JOB NO.	SHEET NO.
CHECKED:	SAT	BEXAR				261

I:\160-10240-009\4-0-production\4-01-drawings\plan sheets\water\90% submittal\09-Winans03.dgn 4/29/2011 2:37:39 PM

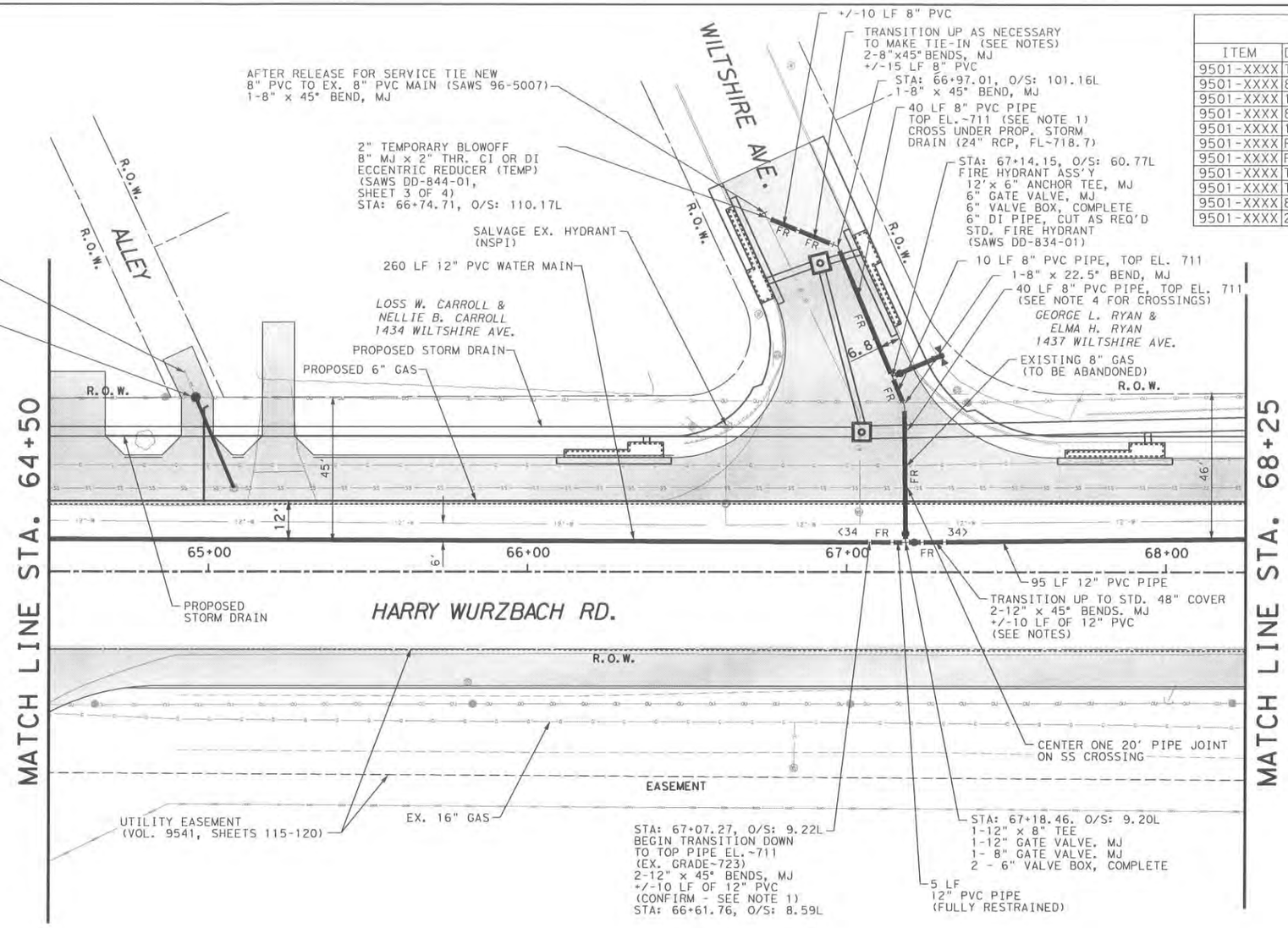

ESTIMATED QUANTITIES			
ITEM	DESCRIPTION	UNITS	QUANTITY
9501-XXXX	TRENCH EXCAVATION PROTECTION	LF	495
9501-XXXX	8"PVC WATER MAIN (RESTRAINED)	LF	115
9501-XXXX	12"PVC WATER MAIN	LF	380
9501-XXXX	8" GATE VALVE	EA	1
9501-XXXX	12" GATE VALVE	EA	1
9501-XXXX	FIRE HYDRANT ASSEMBLY	EA	1
9501-XXXX	PIPE FITTINGS	TON	1.3
9501-XXXX	TRENCH COMPLETION CONDITION "A"	SY	175
9501-XXXX	TRENCH COMPLETION CONDITION "B"	SY	45
9501-XXXX	8" TIE-IN	EA	1
9501-XXXX	2" BLOWOFF TEMPORARY	EA	1

CHLORINATION NOTE

SAWS TO MACHINE CHLORINATE NEW WATER MAINS WHERE MAIN LENGTH > 800 FEET; CONTRACTOR TO CHLORINATE MAINS WHERE LENGTH < 800 FEET WITH HTH.

AT&T NOTE
THE EXISTENCE AND LOCATION OF UNDERGROUND CABLE INDICATED ON THE PLANS ARE TAKEN FROM THE BEST RECORDS AVAILABLE AND ARE NOT GUARANTEED TO BE ACCURATE. CONTRACTOR SHALL CONTACT THE TEXAS STATE WIDE ONE CALL LOCATOR NUMBER 1-800-344-8377 48 HOURS PRIOR TO EXCAVATION. CONTRACTOR IS TO PROTECT AND SUPPORT TELEPHONE COMPANY PLANT DURING CONSTRUCTION.

CPS NOTE
CALL THE TEXAS STATE WIDE ONE CALL LOCATOR NUMBER 1-800-344-8377, 48 HOURS BEFORE BEGINNING ANY EXCAVATION.
DUE TO FEDERAL REGULATIONS TITLE 49. PART 192-181, CPS MUST MAINTAIN ACCESS TO GAS VALVES AT ALL TIMES. THE CONTRACTOR MUST PROTECT AND WORK AROUND ANY GAS VALVES THAT ARE IN THE PROJECT AREA.

TRENCH EXCAVATION SAFETY PROTECTION
CONTRACTOR AND/OR CONTRACTOR'S INDEPENDENTLY RETAINED EMPLOYEE OR STRUCTURAL DESIGN/GEOTECHNICAL/SAFETY/EQUIPMENT CONSULTANT, IF ANY SHALL REVIEW THESE PLANS AND AVAILABLE GEOTECHNICAL INFORMATION AND THE ANTICIPATED INSTALLATION SITE(S) WITHIN THE PROJECT WORK AREA IN ORDER TO IMPLEMENT CONTRACTOR'S TRENCH EXCAVATION SAFETY SYSTEMS, PROGRAMS AND/OR PROCEDURES. THE CONTRACTOR'S IMPLEMENTATION OF THE SYSTEMS, PROGRAMS AND/OR EXCAVATION SAFETY PROTECTION WITH AS A MINIMUM OSHA STANDARDS FOR TRENCH EXCAVATIONS, SPECIFICALLY, CONTRTACTOR AND/OR CONTRACTOR'S INDEPENDENTLY RETAINED EMPLOYEE OF SAFETY CONSULTANT SHALL IMPLEMENT A TRENCH SAFETY PROGRAM IN ACCORDANCE WITH OSHA STANDARDS GOVERNING THE PRESENCE AND ACTIVITIES OF INDIVIDUALS WORKING IN AND AROUND TRENCH EXCAVATION.

SAWS NOTE
THE LOCATION AND DEPTH OF EXISTING WATER MAINS AND SERVICES SHOWN ON THE PLANS ARE APPROXIMATE ONLY. ACTUAL LOCATION AND DEPTHS MUST BE VERIFIED BY THE CONTRACTOR 48 HOURS PRIOR TO BEGINNING CONSTRUCTION BY CALLING THE SAWS WATER LINE LOCATOR AT 704-7811. THE CONTRACTOR SHOULD EXERCISE EXTREME CAUTION WHEN WORKING NEAR EXISTING WATER FACILITIES AND, SHOULD THEY BE DAMAGED DURING CONSTRUCTION OPERATIONS, THE CONTRACTOR WILL BE REQUIRED TO REIMBURSE THE SAWS FOR THE TOTAL COST TO REPAIR OR REPLACE THE DAMAGED FACILITIES.

ASBESTOS NOTE
ASBESTOS CEMENT (AC) PIPE, ALSO KNOWN AS TRANSITE PIPE, AND WHICH IS KNOWN TO BE AN ASBESTOS-CONTAINING MATERIAL (ACM), IS LOCATED WITHIN THE PROJECT LIMITS. SPECIAL WASTE MANAGEMENT PROCEDURES AND HEALTH AND SAFETY REQUIREMENTS WILL BE APPLICABLE WHEN REMOVAL AND/OR DISTURBANCE OF THIS PIPE OCCUR. PAYMENT FOR SUCH WORK IS TO BE MADE UNDER SPECIAL SPECIFICATION FOR HANDLING AND DISPOSAL OF ASBESTOS CEMENT PIPE.

NOTE(S):

1. UTILITIES SHOWN ARE APPROXIMATE. CONTRACTOR TO VERIFY POSITION AND DEPTH OF ALL CROSSINGS AND TIE-INS PRIOR TO CONSTRUCTION AND MAKE ADJUSTMENTS AS NECESSARY TO MAINTAIN A 2' CLEARANCE (MIN) BETWEEN UTILITIES AND COMPLY WITH TCEQ REQUIRED SEPARATION DISTANCES.
2. ALL 8" AND 12" PVC PIPE TO BE C900.
3. ALL TRENCH COMPLETION THIS SHEET WITHIN SHADED AREAS PER CONDITION "B", SHEET 21; OTHER AREAS PER CONDITION "A" UNLESS OTHERWISE NOTES.
4. SEGMENT TOP OF PIPE EL.~711
   CONFIRM THE LOCATION OF THE FOLLOWING UTILITIES AND CROSS AS DESCRIBED BELOW:
   UNDER PROPOSED 6" GAS (VERIFY DEPTH)
   BELOW EX. 12" WATER (FL~717.5)
   ABOVE EX. 12" SAN. SEWER (FL~704.4)
   BELOW EX. 8" GAS (FL~718.3)
   BELOW PROP. 48" RCP STORM (FL~714.5)

PIPE RESTRAINT

#> RESTRAINED LENGTH (FT)/ DIRECTION FROM FITTING

FR FULLY RESTRAINED BETWEEN FITTINGS

BY OTHERS — SAW CUT; RECONSTRUCTED ROADWAY

ASPHALT LEVEL-UP AND OVERLAY BETWEEN RECONSTRUCTED SHOULDERS

LEGEND

PROPOSED UTILITIES: (SOLID/BOLD)
WATER MAIN
WATER SERVICE (SIZE/TYPE AS NOTED)

EXISTING UTILITIES: (OPEN/SHADED)
WATER MAIN
GAS MAIN
SAN. SEWER/MANHOLE
STORM SEWER
OVERHEAD UTIL./POLE
FIBEROPTIC CABLE

GRAPHIC SCALE
0' 20' 40'
1" =40' (11" X 17")
1" =20' (FULL SIZE)

STATE OF TEXAS — STACEY L. WEICHERT 84036 — LICENSED PROFESSIONAL ENGINEER — 5-6-11

Lockwood, Andrews & Newnam, Inc. — A LED A DALY COMPANY — REGISTRATION NO. 2614

SAN ANTONIO WATER SYSTEM

FT. SAM HOUSTON TRANSPORTATION PROJECT

HARRY WURZBACH RD. AT WINANS RD.

SAWS JOB NO. 08-5055

©2011 Texas Department of Transportation

SHEET 11 OF 22

DESIGNED:	FED. RD. DIV. NO.	STATE	PROJECT NO.			HIGHWAY NO.
CHECKED:	6	TEXAS				HARRY WURZBACH
DRAWN:	STATE DIST.	COUNTY	CONTROL NO.	SECTION NO.	JOB NO.	SHEET NO.
CHECKED:	SAT	BEXAR				262

I:\160-10240-009\4-0-production\4-01-drawings\plan sheets\water\90% submittal\10-Winans04.dgn 4/29/2011 2:37:40 PM

ASBESTOS NOTE
ASBESTOS CEMENT (AC) PIPE, ALSO KNOWN AS TRANSITE PIPE, AND WHICH IS KNOWN TO BE AN ASBESTOS-CONTAINING MATERIAL (ACM), IS LOCATED WITHIN THE PROJECT LIMITS. SPECIAL WASTE MANAGEMENT PROCEDURES AND HEALTH AND SAFETY REQUIREMENTS WILL BE APPLICABLE WHEN REMOVAL AND/OR DISTURBANCE OF THIS PIPE OCCUR. PAYMENT FOR SUCH WORK IS TO BE MADE UNDER SPECIAL SPECIFICATION FOR HANDLING AND DISPOSAL OF ASBESTOS CEMENT PIPE.

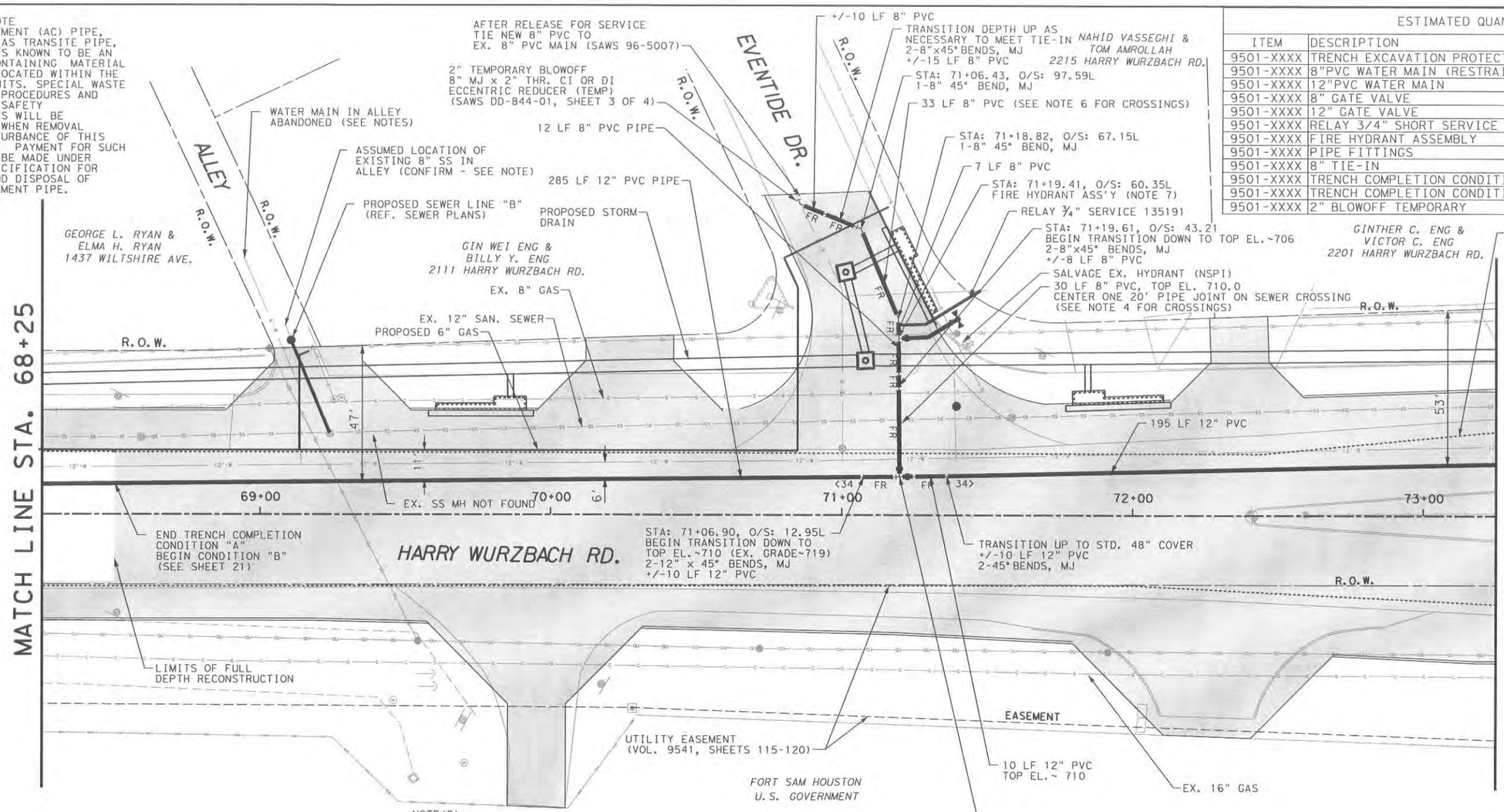

ESTIMATED QUANTITIES

ITEM	DESCRIPTION	UNITS	QUANTITY
9501-XXXX	TRENCH EXCAVATION PROTECTION	LF	625
9501-XXXX	8"PVC WATER MAIN (RESTRAINED)	LF	115
9501-XXXX	12"PVC WATER MAIN	LF	510
9501-XXXX	8" GATE VALVE	EA	1
9501-XXXX	12" GATE VALVE	EA	1
9501-XXXX	RELAY 3/4" SHORT SERVICE	EA	1
9501-XXXX	FIRE HYDRANT ASSEMBLY	EA	1
9501-XXXX	PIPE FITTINGS	TON	1.4
9501-XXXX	8" TIE-IN	EA	1
9501-XXXX	TRENCH COMPLETION CONDITION "A"	SY	15
9501-XXXX	TRENCH COMPLETION CONDITION "B"	SY	215
9501-XXXX	2" BLOWOFF TEMPORARY	EA	1

AT&T NOTE
THE EXISTENCE AND LOCATION OF UNDERGROUND CABLE INDICATED ON THE PLANS ARE TAKEN FROM THE BEST RECORDS AVAILABLE AND ARE NOT GUARANTEED TO BE ACCURATE. CONTRACTOR SHALL CONTACT THE TEXAS STATE WIDE ONE CALL LOCATOR NUMBER 1-800-344-8377 48 HOURS PRIOR TO EXCAVATION. CONTRACTOR IS TO PROTECT AND SUPPORT TELEPHONE COMPANY PLANT DURING CONSTRUCTION.

CPS NOTE
CALL THE TEXAS STATE WIDE ONE CALL LOCATOR NUMBER 1-800-344-8377, 48 HOURS BEFORE BEGINNING ANY EXCAVATION.
DUE TO FEDERAL REGULATIONS TITLE 49. PART 192-181, CPS MUST MAINTAIN ACCESS TO GAS VALVES AT ALL TIMES. THE CONTRACTOR MUST PROTECT AND WORK AROUND ANY GAS VALVES THAT ARE IN THE PROJECT AREA.

TRENCH EXCAVATION SAFETY PROTECTION
CONTRACTOR AND/OR CONTRACTOR'S INDEPENDENTLY RETAINED EMPLOYEE OR STRUCTURAL DESIGN/GEOTECHNICAL/SAFETY/EQUIPMENT CONSULTANT, IF ANY SHALL REVIEW THESE PLANS AND AVAILABLE GEOTECHNICAL INFORMATION AND THE ANTICIPATED INSTALLATION SITE(S) WITHIN THE PROJECT WORK AREA IN ORDER TO IMPLEMENT CONTRACTOR'S TRENCH EXCAVATION SAFETY SYSTEMS, PROGRAMS AND/OR PROCEDURES. THE CONTRACTOR'S IMPLEMENTATION OF THE SYSTEMS, PROGRAMS AND/OR EXCAVATION SAFETY PROTECTION WITH AS A MINIMUM OSHA STANDARDS FOR TRENCH EXCAVATIONS, SPECIFICALLY, CONTRTACTOR AND/OR CONTRACTOR'S INDEPENDENTLY RETAINED EMPLOYEE OF SAFETY CONSULTANT SHALL IMPLEMENT A TRENCH SAFETY PROGRAM IN ACCORDANCE WITH OSHA STANDARDS GOVERNING THE PRESENCE AND ACTIVITIES OF INDIVIDUALS WORKING IN AND AROUND TRENCH EXCAVATION.

SAWS NOTE
THE LOCATION AND DEPTH OF EXISTING WATER MAINS AND SERVICES SHOWN ON THE PLANS ARE APPROXIMATE ONLY. ACTUAL LOCATION AND DEPTHS MUST BE VERIFIED BY THE CONTRACTOR 48 HOURS PRIOR TO BEGINNING CONSTRUCTION BY CALLING THE SAWS WATER LINE LOCATOR AT 704-7811. THE CONTRACTOR SHOULD EXERCISE EXTREME CAUTION WHEN WORKING NEAR EXISTING WATER FACILITIES AND, SHOULD THEY BE DAMAGED DURING CONSTRUCTION OPERATIONS, THE CONTRACTOR WILL BE REQUIRED TO REIMBURSE THE SAWS FOR THE TOTAL COST TO REPAIR OR REPLACE THE DAMAGED FACILITIES.

NOTE(S):

1. UTILITIES SHOWN ARE APPROXIMATE. CONTRACTOR TO VERIFY POSITION AND DEPTH OF ALL CROSSINGS AND TIE-INS PRIOR TO CONSTRUCTION AND MAKE ADJUSTMENTS AS NECESSARY TO MAINTAIN A 2' CLEARANCE (MIN) BETWEEN UTILITIES AND COMPLY WITH TCEQ REQUIRED SEPARATION DISTANCES.
2. ALL 8" AND 12" PVC PIPE TO BE C900.
3. ALL TRENCH COMPLETION THIS SHEET WITHIN SHADED AREAS PER CONDITION "B", SHEET 21 UNLESS OTHERWISE NOTED.
4. SEGMENT TOP OF PIPE EL.~710
   EX. GRADE ~ 719
   CONFIRM THE LOCATION OF THE FOLLOWING UTILITIES AND CROSS AS DESCRIBED BELOW:
   BELOW EX. 12" WATER (FL~713.6)
   ABOVE EX. 12" SAN. SEWER (FL~705.8)
   BELOW EX. 8" GAS (VERIFY DEPTH)
5. SEGMENT TOP OF PIPE EL.~706
   CROSSINGS AS FOLLOWS (CONFIRM):
   BELOW PROP. 48" RCP STORM (FL~708.8)
6. SEGMENT TOP OF PIPE EL.~706
   CROSSINGS AS FOLLOWS (CONFIRM):
   BELOW PROP. 30" RCP STORM (FL~713.6)
7. 12" x 6" MJ TEE
   6" GATE VALVE, MJ
   6" VALVE BOX, COMPLETE
   6" DI PIPE, CUT AS REQ'D
   STD FIRE HYDRANT (SAWS DD-834-01)
8. MAINS IN ALLEYS REPLACED BY MAINS IN STREETS (SAWS JOB 96-5007) - ALLEY MAINS ASSUMED TO BE ABANDONED

PIPE RESTRAINT
#> RESTRAINED LENGTH (FT)/ DIRECTION FROM FITTING
FR FULLY RESTRAINED BETWEEN FITTINGS

BY OTHERS — SAW CUT; RECONSTRUCTED ROADWAY; ASPHALT LEVEL-UP AND OVERLAY BETWEEN RECONSTRUCTED SHOULDERS

LEGEND
PROPOSED UTILITIES: (SOLID/BOLD)
WATER MAIN
WATER SERVICE (SIZE/TYPE AS NOTED)
EXISTING UTILITIES: (OPEN/SHADED)
WATER MAIN
GAS MAIN
SAN. SEWER/MANHOLE
STORM SEWER
OVERHEAD UTIL./POLE
FIBEROPTIC CABLE

STACEY L. WEICHERT 84036 LICENSED PROFESSIONAL ENGINEER STATE OF TEXAS 5-6-11

Lockwood, Andrews & Newnam, Inc. A LEO A DALY COMPANY REGISTRATION NO: 2614

SAN ANTONIO WATER SYSTEM

FT. SAM HOUSTON TRANSPORTATION PROJECT
HARRY WURZBACH RD. AT RITTIMAN RD.
SAWS JOB NO. 08-5055

©2011 Texas Department of Transportation

SHEET 12 OF 22

DESIGNED:	FED. RD. DIV. NO.	STATE	PROJECT NO.			HIGHWAY NO.
CHECKED:	6	TEXAS				HARRY WURZBACH
DRAWN:	STATE DIST.	COUNTY	CONTROL NO.	SECTION NO.	JOB NO.	SHEET NO.
CHECKED:	SAT	BEXAR				263

I:\160-10240-009\4-0-production\4-01-drawings\plan sheets\water\90% submittal\11-Rittiman01.dgn 4/29/2011 2:37:40 PM

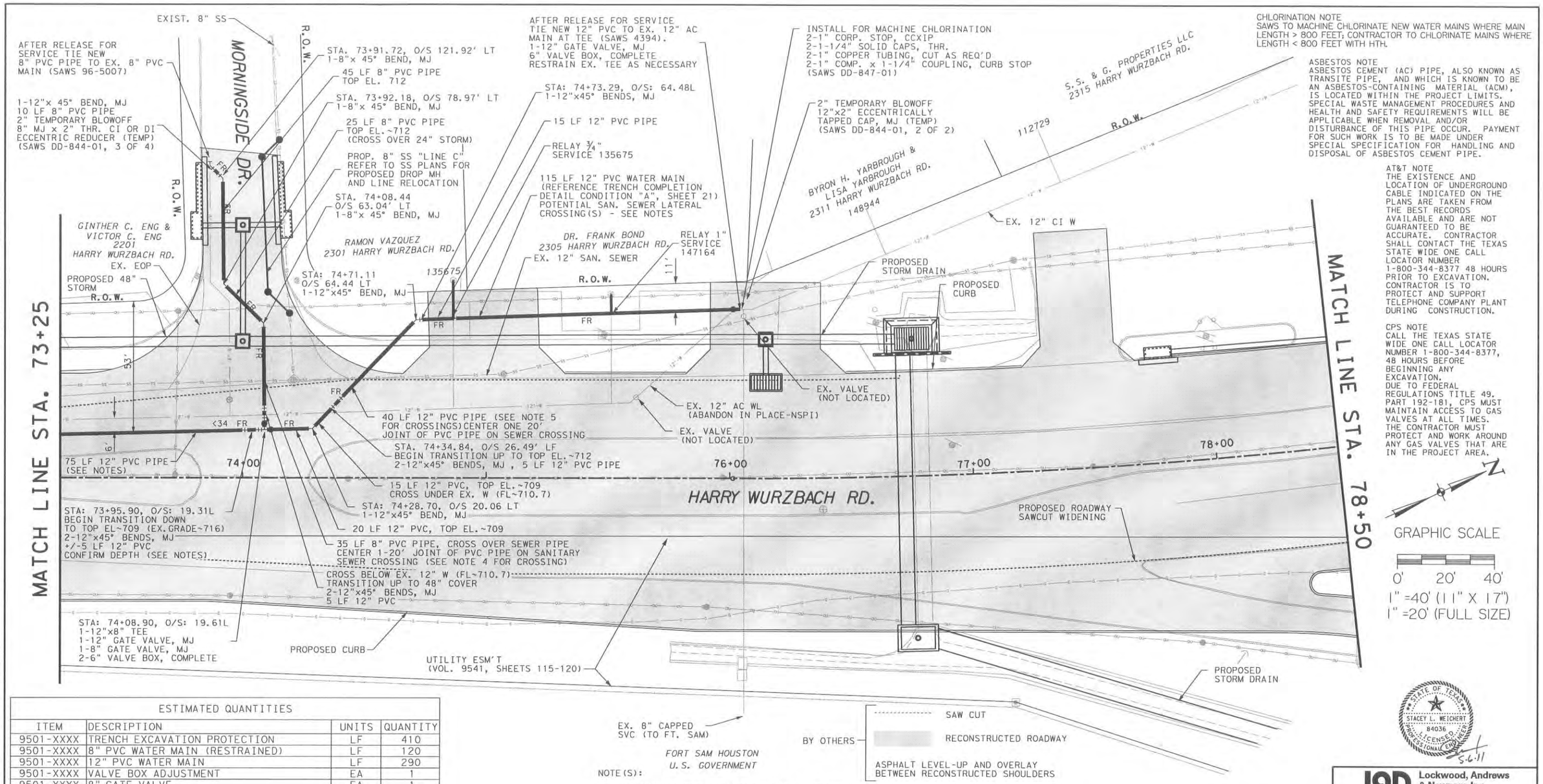

CHLORINATION NOTE
SAWS TO MACHINE CHLORINATE NEW WATER MAINS WHERE MAIN LENGTH > 800 FEET; CONTRACTOR TO CHLORINATE MAINS WHERE LENGTH < 800 FEET WITH HTH.

ASBESTOS NOTE
ASBESTOS CEMENT (AC) PIPE, ALSO KNOWN AS TRANSITE PIPE, AND WHICH IS KNOWN TO BE AN ASBESTOS-CONTAINING MATERIAL (ACM), IS LOCATED WITHIN THE PROJECT LIMITS. SPECIAL WASTE MANAGEMENT PROCEDURES AND HEALTH AND SAFETY REQUIREMENTS WILL BE APPLICABLE WHEN REMOVAL AND/OR DISTURBANCE OF THIS PIPE OCCUR. PAYMENT FOR SUCH WORK IS TO BE MADE UNDER SPECIAL SPECIFICATION FOR HANDLING AND DISPOSAL OF ASBESTOS CEMENT PIPE.

AT&T NOTE
THE EXISTENCE AND LOCATION OF UNDERGROUND CABLE INDICATED ON THE PLANS ARE TAKEN FROM THE BEST RECORDS AVAILABLE AND ARE NOT GUARANTEED TO BE ACCURATE. CONTRACTOR SHALL CONTACT THE TEXAS STATE WIDE ONE CALL LOCATOR NUMBER 1-800-344-8377 48 HOURS PRIOR TO EXCAVATION. CONTRACTOR IS TO PROTECT AND SUPPORT TELEPHONE COMPANY PLANT DURING CONSTRUCTION.

CPS NOTE
CALL THE TEXAS STATE WIDE ONE CALL LOCATOR NUMBER 1-800-344-8377, 48 HOURS BEFORE BEGINNING ANY EXCAVATION.
DUE TO FEDERAL REGULATIONS TITLE 49. PART 192-181, CPS MUST MAINTAIN ACCESS TO GAS VALVES AT ALL TIMES. THE CONTRACTOR MUST PROTECT AND WORK AROUND ANY GAS VALVES THAT ARE IN THE PROJECT AREA.

ESTIMATED QUANTITIES

ITEM	DESCRIPTION	UNITS	QUANTITY
9501-XXXX	TRENCH EXCAVATION PROTECTION	LF	410
9501-XXXX	8" PVC WATER MAIN (RESTRAINED)	LF	120
9501-XXXX	12" PVC WATER MAIN	LF	290
9501-XXXX	VALVE BOX ADJUSTMENT	EA	1
9501-XXXX	8" GATE VALVE	EA	1
9501-XXXX	12" GATE VALVE	EA	2
9501-XXXX	RELAY 3/4" SHORT SERVICE	EA	1
9501-XXXX	RELAY 1" SHORT SERVICE	EA	1
9501-XXXX	PIPE FITTINGS	TON	1.6
9501-XXXX	8" TIE-IN	EA	1
9501-XXXX	12" TIE-IN	EA	1
9501-XXXX	2" BLOWOFF TEMPORARY	EA	2
9501-XXXX	TRENCH COMPLETION CONDITION "B"	SY	180

TRENCH EXCAVATION SAFETY PROTECTION
CONTRACTOR AND/OR CONTRACTOR'S INDEPENDENTLY RETAINED EMPLOYEE OR STRUCTURAL DESIGN/GEOTECHNICAL/SAFETY/EQUIPMENT CONSULTANT, IF ANY SHALL REVIEW THESE PLANS AND AVAILABLE GEOTECHNICAL INFORMATION AND THE ANTICIPATED INSTALLATION SITE(S) WITHIN THE PROJECT WORK AREA IN ORDER TO IMPLEMENT CONTRACTOR'S TRENCH EXCAVATION SAFETY SYSTEMS, PROGRAMS AND/OR PROCEDURES. THE CONTRACTOR'S IMPLEMENTATION OF THE SYSTEMS, PROGRAMS AND/OR EXCAVATION SAFETY PROTECTION WITH AS A MINIMUM OSHA STANDARDS FOR TRENCH EXCAVATIONS, SPECIFICALLY, CONTRTACTOR AND/OR CONTRACTOR'S INDEPENDENTLY RETAINED EMPLOYEE OF SAFETY CONSULTANT SHALL IMPLEMENT A TRENCH SAFETY PROGRAM IN ACCORDANCE WITH OSHA STANDARDS GOVERNING THE PRESENCE AND ACTIVITIES OF INDIVIDUALS WORKING IN AND AROUND TRENCH EXCAVATION.

SAWS NOTE
THE LOCATION AND DEPTH OF EXISTING WATER MAINS AND SERVICES SHOWN ON THE PLANS ARE APPROXIMATE ONLY. ACTUAL LOCATION AND DEPTHS MUST BE VERIFIED BY THE CONTRACTOR 48 HOURS PRIOR TO BEGINNING CONSTRUCTION BY CALLING THE SAWS WATER LINE LOCATOR AT 704-7811. THE CONTRACTOR SHOULD EXERCISE EXTREME CAUTION WHEN WORKING NEAR EXISTING WATER FACILITIES AND, SHOULD THEY BE DAMAGED DURING CONSTRUCTION OPERATIONS, THE CONTRACTOR WILL BE REQUIRED TO REIMBURSE THE SAWS FOR THE TOTAL COST TO REPAIR OR REPLACE THE DAMAGED FACILITIES.

NOTE(S):

1. UTILITIES SHOWN ARE APPROXIMATE. CONTRACTOR TO VERIFY POSITION AND DEPTH OF ALL CROSSINGS AND TIE-INS PRIOR TO CONSTRUCTION AND MAKE ADJUSTMENTS AS NECESSARY TO MAINTAIN A 2' CLEARANCE (MIN) BETWEEN UTILITIES AND COMPLY WITH TCEQ REQUIRED SEPARATION DISTANCES.
2. ALL TRENCH COMPLETION THIS SHEET PER CONDITION "B" (SHEET 21) UNLESS OTHERWISE NOTED.
3. ALL 8" AND 12" PVC PIPE TO BE C900 OR DUCTILE IRON AS SHOWN ON THIS SHEET
4. SEGMENT TOP OF 8" PIPE EL.~712 (EX. GRADE ~ 716)
   CONFIRM THE LOCATION OF THE FOLLOWING UTILITIES AND CROSS AS DESCRIBED BELOW:
   BELOW EX. 12" WATER (FL~710.7)
   ABOVE EX. 12" SAN. SEWER (FL~705.5)
   ABOVE PROP. 48" RCP STORM (FL~700.9)
5. SEGMENT TOP OF 12" PIPE EL.~712 (EX. GRADE ~ 716)
   CONFIRM THE LOCATION OF THE FOLLOWING UTILITIES AND CROSS AS DESCRIBED BELOW:
   ABOVE EX. 12" SAN. SEWER (FL~705.8)
   ABOVE PROP. 48" RCP STORM (FL~700.4)
6. ALL 8" PIPE TO BE FULLY RESTRAINED.

PIPE RESTRAINT
#> RESTRAINED LENGTH (FT)/ DIRECTION FROM FITTING
FR FULLY RESTRAINED BETWEEN FITTINGS

LEGEND
PROPOSED UTILITIES: (SOLID/BOLD)
WATER MAIN
WATER SERVICE (SIZE/TYPE AS NOTED)
EXISTING UTILITIES: (OPEN/SHADED)
WATER MAIN
GAS MAIN
SAN. SEWER/MANHOLE
STORM SEWER
OVERHEAD UTIL./POLE
FIBEROPTIC CABLE

STATE OF TEXAS
STACEY L. WEICHERT
84036
LICENSED
PROFESSIONAL ENGINEER
5-6-11

Lockwood, Andrews & Newnam, Inc.
A LEO A DALY COMPANY
REGISTRATION NO: 2614

SAN ANTONIO WATER SYSTEM

FT. SAM HOUSTON TRANSPORTATION PROJECT

HARRY WURZBACH RD. AT RITTIMAN RD.

SAWS JOB NO. 08-5055

©2011 Texas Department of Transportation

SHEET 13 OF 22

DESIGNED:	FED. RD. DIV. NO.	STATE	PROJECT NO.			HIGHWAY NO.
CHECKED:	6	TEXAS				HARRY WURZBACH
DRAWN:	STATE DIST.	COUNTY	CONTROL NO.	SECTION NO.	JOB NO.	SHEET NO.
CHECKED:	SAT	BEXAR				264

I:\160-10240-009\4-0-production\4-01-drawings\plan sheets\water\90% submittal\12-Rittman02.dgn 4/29/2011 2:37:41 PM

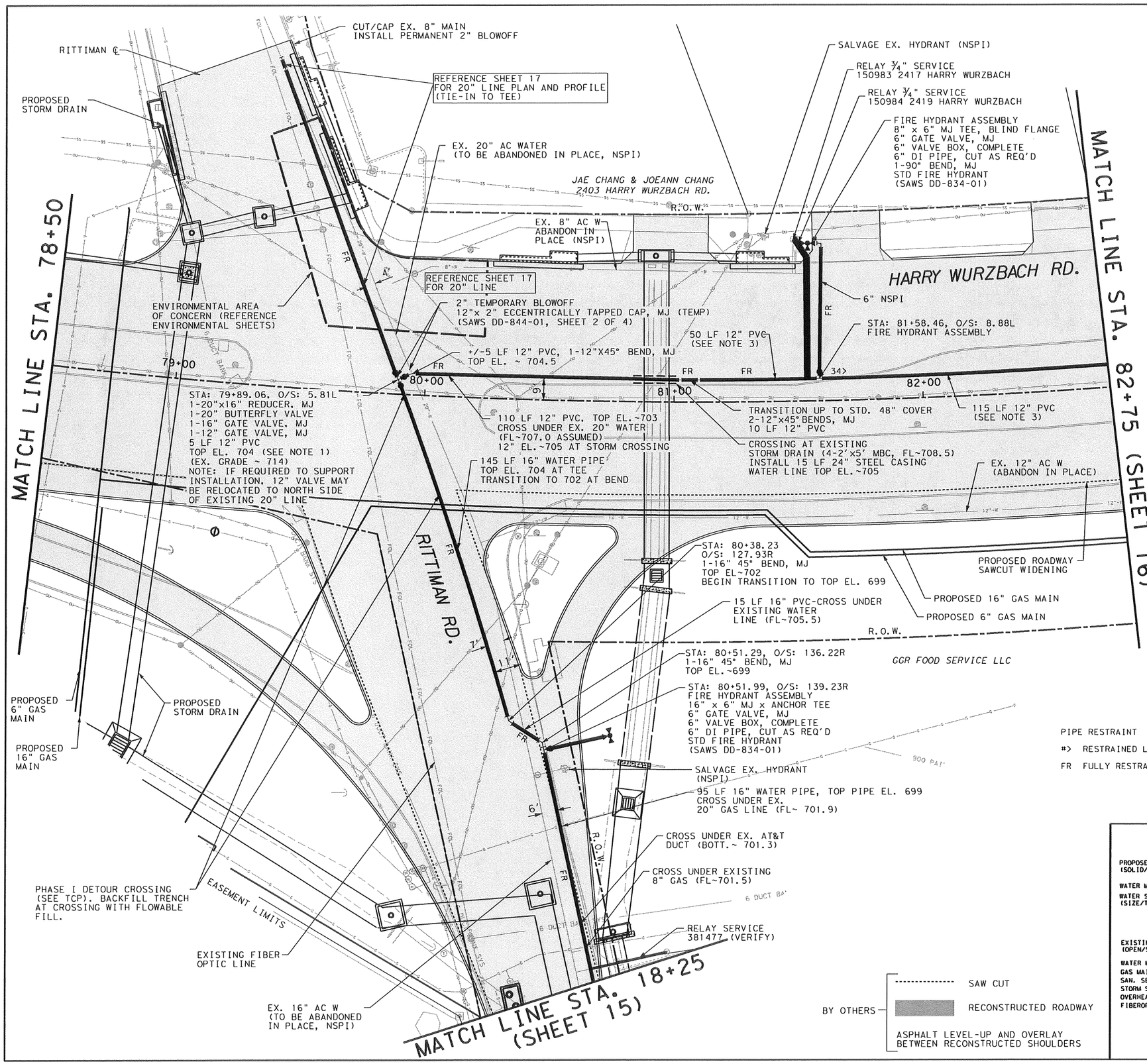

ESTIMATED QUANTITIES			
ITEM	DESCRIPTION	UNITS	QUANTITY
9501-XXXX	TRENCH EXCAVATION PROTECTION	LF	685
9501-XXXX	12"PVC WATER MAIN	LF	290
9501-XXXX	16" PVC WATER MAIN	LF	255
9501-XXXX	20" DI WATER MAIN	LF	140
9501-XXXX	12" GATE VALVE	EA	1
9501-XXXX	16" GATE VALVE	EA	1
9501-XXXX	20" BUTTERFLY VALVE	EA	1
9501-XXXX	12" TIE-IN	EA	1
9501-XXXX	20" TIE-IN	EA	1
9501-XXXX	FIRE HYDRANT ASSEMBLY	EA	2
9501-XXXX	RELAY 3/4" LONG SERVICE	EA	2
9501-XXXX	RELAY 2" SHORT SERVICE	EA	1
9501-XXXX	PIPE FITTINGS	TON	2.0
9501-XXXX	CASING OR LINER, 24"	LF	15
9501-XXXX	HYDROSTATIC TESTING	EA	1
9501-XXXX	2" BLOWOFF TEMPORARY	EA	2
9501-XXXX	4" BLOWOFF TEMPORARY	EA	1
9501-XXXX	2" BLOWOFF PERMANENT	EA	1
9501-XXXX	FLOWABLE FILL	CY	86
9501-XXXX	TRENCH COMPLETION CONDITION "B"	SY	305
9501-XXXX	CONCRETE ENCASEMENT, CRADLES, SADDLES & COLLARS	CY	18

NOTES:

1. UTILITIES SHOWN ARE APPROXIMATE. CONTRACTOR TO VERIFY POSITION AND DEPTH OF ALL CROSSINGS AND TIE-INS PRIOR TO CONSTRUCTION AND MAKE ADJUSTMENTS AS NECESSARY TO MAINTAIN A 2' CLEARANCE (MIN) BETWEEN UTILITIES AND COMPLY WITH TCEQ REQUIRED SEPERATION DISTANCES.
2. ALL TRENCH COMPLETION THIS SHEET PER CONDITION "B" (SHEET 21) UNLESS OTHERWISE NOTED.
3. ALL 12" PVC PIPE TO BE C900, ALL 16" WATER PIPE TO BE PVC C905; ALL 20" PIPE TO BE DI.
4. SEE CPS, AT&T, SAWS, ASBESTOS, CHLORINATION AND EXCAVATION NOTES SHEET 15

GRAPHIC SCALE

0' 20' 40'

1" =40' (11" X 17")
1" =20' (FULL SIZE)

PIPE RESTRAINT

#> RESTRAINED LENGTH (FT)/ DIRECTION FROM FITTING

FR FULLY RESTRAINED BETWEEN FITTINGS

BY OTHERS — SAW CUT — RECONSTRUCTED ROADWAY

ASPHALT LEVEL-UP AND OVERLAY BETWEEN RECONSTRUCTED SHOULDERS

STATE OF TEXAS — STACEY L. WEICHERT 84036 — LICENSED PROFESSIONAL ENGINEER — 7-20-11

Lockwood, Andrews & Newnam, Inc.
A LEO A DALY COMPANY
REGISTRATION NO: 2614

LEGEND

PROPOSED UTILITIES: (SOLID/BOLD)
WATER MAIN
WATER SERVICE (SIZE/TYPE AS NOTED)

EXISTING UTILITIES: (OPEN/SHADED)
WATER MAIN
GAS MAIN
SAN. SEWER/MANHOLE
STORM SEWER
OVERHEAD UTIL./POLE
FIBEROPTIC CABLE

SAN ANTONIO WATER SYSTEM

FT. SAM HOUSTON TRANSPORTATION PROJECT

HARRY WURZBACH RD. AT RITTIMAN RD.

SAWS JOB NO. 08-5055

©2011 Texas Department of Transportation

SHEET 14 OF 22

DESIGNED:	FED. RD. DIV. NO.	STATE	PROJECT NO.			HIGHWAY NO.
CHECKED:	6	TEXAS				HARRY WURZBACH
DRAWN:	STATE DIST.	COUNTY	CONTROL NO.	SECTION NO.	JOB NO.	SHEET NO.
CHECKED:	SAT	BEXAR				265

L:\160-10240-009\4-0-Production\4-01-Drawings\Plan Sheets\Water\90% Submittal\13-Rittiman03*2011-02-03.dgn 7/20/2011 3:58:25 PM

ESTIMATED QUANTITIES			
ITEM	DESCRIPTION	UNITS	QUANTITY
9501-XXXX	TRENCH EXCAVATION PROTECTION	LF	330
9501-XXXX	16" PVC WATER MAIN	LF	330
9501-XXXX	16" GATE VALVE	EA	1
9501-XXXX	16" TIE-IN	EA	1
9501-XXXX	RELAY 2" SHORT SERVICE	EA	1
9501-XXXX	PIPE FITTINGS	TON	1.9
9501-XXXX	HYDROSTATIC TESTING	EA	1
9501-XXXX	2" BLOWOFF TEMPORARY	EA	1
9501-XXXX	TRENCH COMPLETION CONDITION "B"	SY	160

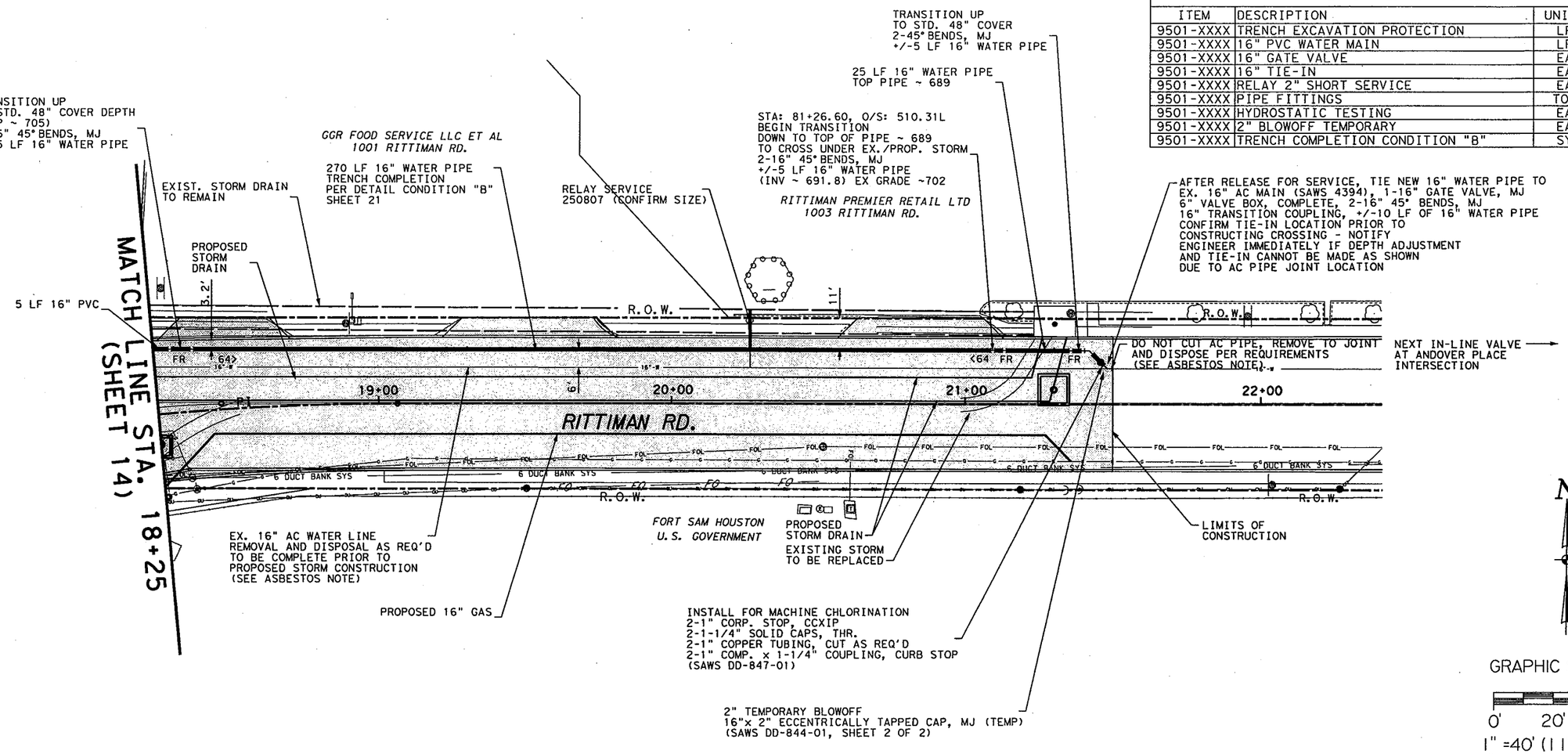

GRAPHIC SCALE

0' 20' 40'

1" =40' (11" X 17")
1" =20' (FULL SIZE)

ASBESTOS NOTE
ASBESTOS CEMENT (AC) PIPE, ALSO KNOWN AS TRANSITE PIPE, AND WHICH IS KNOWN TO BE AN ASBESTOS-CONTAINING MATERIAL (ACM), IS LOCATED WITHIN THE PROJECT LIMITS. SPECIAL WASTE MANAGEMENT PROCEDURES AND HEALTH AND SAFETY REQUIREMENTS WILL BE APPLICABLE WHEN REMOVAL AND/OR DISTURBANCE OF THIS PIPE OCCUR. PAYMENT FOR SUCH WORK IS TO BE MADE UNDER SPECIAL SPECIFICATION FOR HANDLING AND DISPOSAL OF ASBESTOS CEMENT PIPE.

AT&T NOTE
THE EXISTENCE AND LOCATION OF UNDERGROUND CABLE INDICATED ON THE PLANS ARE TAKEN FROM THE BEST RECORDS AVAILABLE AND ARE NOT GUARANTEED TO BE ACCURATE. CONTRACTOR SHALL CONTACT THE TEXAS STATE WIDE ONE CALL LOCATOR NUMBER 1-800-344-8377 48 HOURS PRIOR TO EXCAVATION. CONTRACTOR IS TO PROTECT AND SUPPORT TELEPHONE COMPANY PLANT DURING CONSTRUCTION.

CPS NOTE
CALL THE TEXAS STATE WIDE ONE CALL LOCATOR NUMBER 1-800-344-8377, 48 HOURS BEFORE BEGINNING ANY EXCAVATION.
DUE TO FEDERAL REGULATIONS TITLE 49. PART 192-181, CPS MUST MAINTAIN ACCESS TO GAS VALVES AT ALL TIMES. THE CONTRACTOR MUST PROTECT AND WORK AROUND ANY GAS VALVES THAT ARE IN THE PROJECT AREA.

TRENCH EXCAVATION SAFETY PROTECTION
CONTRACTOR AND/OR CONTRACTOR'S INDEPENDENTLY RETAINED EMPLOYEE OR STRUCTURAL DESIGN/GEOTECHNICAL/SAFETY/EQUIPMENT CONSULTANT, IF ANY SHALL REVIEW THESE PLANS AND AVAILABLE GEOTECHNICAL INFORMATION AND THE ANTICIPATED INSTALLATION SITE(S) WITHIN THE PROJECT WORK AREA IN ORDER TO IMPLEMENT CONTRACTOR'S TRENCH EXCAVATION SAFETY SYSTEMS, PROGRAMS AND/OR PROCEDURES. THE CONTRACTOR'S IMPLEMENTATION OF THE SYSTEMS, PROGRAMS AND/OR EXCAVATION SAFETY PROTECTION WITH AS A MINIMUM OSHA STANDARDS FOR TRENCH EXCAVATIONS, SPECIFICALLY, CONTRTACTOR AND/OR CONTRACTOR'S INDEPENDENTLY RETAINED EMPLOYEE OF SAFETY CONSULTANT SHALL IMPLEMENT A TRENCH SAFETY PROGRAM IN ACCORDANCE WITH OSHA STANDARDS GOVERNING THE PRESENCE AND ACTIVITIES OF INDIVIDUALS WORKING IN AND AROUND TRENCH EXCAVATION.

SAWS NOTE
THE LOCATION AND DEPTH OF EXISTING WATER MAINS AND SERVICES SHOWN ON THE PLANS ARE APPROXIMATE ONLY. ACTUAL LOCATION AND DEPTHS MUST BE VERIFIED BY THE CONTRACTOR 48 HOURS PRIOR TO BEGINNING CONSTRUCTION BY CALLING THE SAWS WATER LINE LOCATOR AT 704-7811. THE CONTRACTOR SHOULD EXERCISE EXTREME CAUTION WHEN WORKING NEAR EXISTING WATER FACILITIES AND, SHOULD THEY BE DAMAGED DURING CONSTRUCTION OPERATIONS, THE CONTRACTOR WILL BE REQUIRED TO REIMBURSE THE SAWS FOR THE TOTAL COST TO REPAIR OR REPLACE THE DAMAGED FACILITIES.

ADDITIONAL LEGEND/ABBREVIATIONS:

SS SANITARY SEWER
OU OVERHEAD UTILITY
G GAS

PIPE RESTRAINT

#> RESTRAINED LENGTH (FT)/ DIRECTION FROM FITTING

FR FULLY RESTRAINED BETWEEN FITTINGS

NOTE(S):

1. UTILITIES SHOWN ARE APPROXIMATE. CONTRACTOR TO VERIFY POSITION AND DEPTH OF ALL CROSSINGS AND TIE-INS PRIOR TO CONSTRUCTION AND MAKE ADJUSTMENTS AS NECESSARY TO MAINTAIN A 2' CLEARANCE (MIN) BETWEEN UTILITIES AND COMPLY WITH TCEQ REQUIRED SEPARATION DISTANCES.
2. ALL TRENCH COMPLETION THIS SHEET PER CONDITION "B" (SHEET 21) UNLESS OTHERWISE NOTED.
3. ALL 16" WATER PIPE TO BE PVC C905.

BY OTHERS — SAW CUT
RECONSTRUCTED ROADWAY
ASPHALT LEVEL-UP AND OVERLAY BETWEEN RECONSTRUCTED SHOULDERS

LEGEND

PROPOSED UTILITIES: (SOLID/BOLD)
WATER MAIN
WATER SERVICE (SIZE/TYPE AS NOTED)

EXISTING UTILITIES: (OPEN/SHADED)
WATER MAIN
GAS MAIN
SAN. SEWER/MANHOLE
STORM SEWER
OVERHEAD UTIL./POLE
FIBEROPTIC CABLE

STATE OF TEXAS
STACEY L. WEICHERT
84036
LICENSED
PROFESSIONAL ENGINEER
3.8.11

Lockwood, Andrews & Newnam, Inc.
A LEO A DALY COMPANY
REGISTRATION NO# 2614

SAN ANTONIO WATER SYSTEM

FT. SAM HOUSTON TRANSPORTATION PROJECT

HARRY WURZBACH RD. AT RITTIMAN RD.

SAWS JOB NO. 08-5055

©2011 Texas Department of Transportation

SHEET 15 OF 22

DESIGNED:	FED. RD. DIV. NO.	STATE	PROJECT NO.			HIGHWAY NO.
CHECKED:	6	TEXAS				HARRY WURZBACH
DRAWN:	STATE DIST.	COUNTY	CONTROL NO.	SECTION NO.	JOB NO.	SHEET NO.
CHECKED:	SAT	BEXAR				266

3/8/2011 6:05:24 PM

I:\160-10240-009\4-0-production\4-01-drawings\plan sheets\water\90% submittal\14-Rittiman04.dgn

ASBESTOS NOTE
ASBESTOS CEMENT (AC) PIPE, ALSO KNOWN AS TRANSITE PIPE, AND WHICH IS KNOWN TO BE AN ASBESTOS-CONTAINING MATERIAL (ACM), IS LOCATED WITHIN THE PROJECT LIMITS. SPECIAL WASTE MANAGEMENT PROCEDURES AND HEALTH AND SAFETY REQUIREMENTS WILL BE APPLICABLE WHEN REMOVAL AND/OR DISTURBANCE OF THIS PIPE OCCUR. PAYMENT FOR SUCH WORK IS TO BE MADE UNDER SPECIAL SPECIFICATION FOR HANDLING AND DISPOSAL OF ASBESTOS CEMENT PIPE.

ESTIMATED QUANTITIES

ITEM	DESCRIPTION	UNITS	QUANTITY
9501-XXXX	TRENCH EXCAVATION PROTECTION	LF	335
9501-XXXX	12"PVC WATER MAIN	LF	335
9501-XXXX	12" GATE VALVE	EA	1
9501-XXXX	12" TIE-IN	EA	1
9501-XXXX	PIPE FITTINGS	TON	0.4
9501-XXXX	HYDROSTATIC TESTING	EA	1
9501-XXXX	2" BLOWOFF TEMPORARY	EA	1
9501-XXXX	FLOWABLE FILL	CY	36
9501-XXXX	TRENCH COMPLETION CONDITION "B"	SY	150

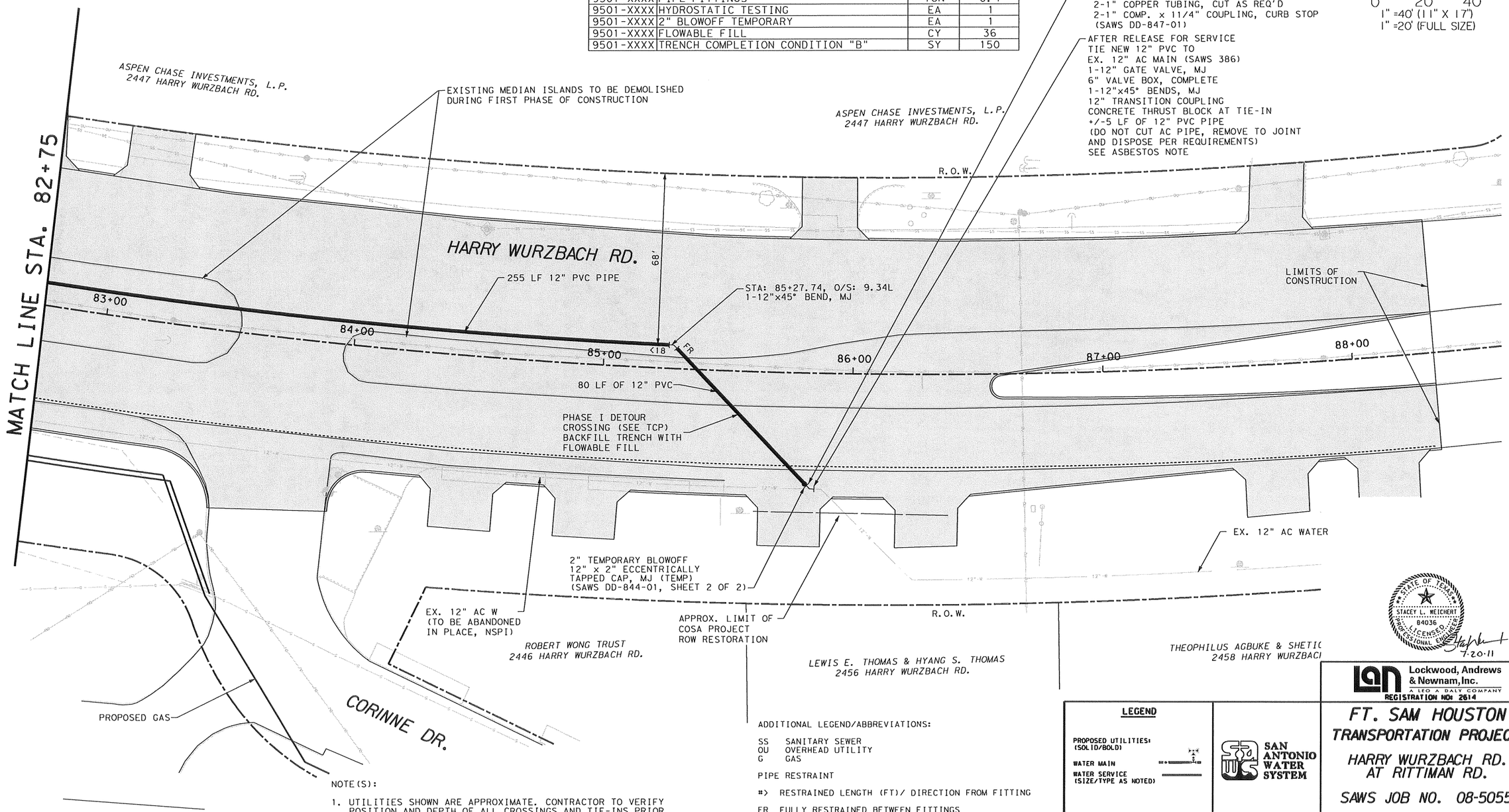

NOTE(S):

1. UTILITIES SHOWN ARE APPROXIMATE. CONTRACTOR TO VERIFY POSITION AND DEPTH OF ALL CROSSINGS AND TIE-INS PRIOR TO CONSTRUCTION AND MAKE ADJUSTMENTS AS NECESSARY TO MAINTAIN A 2' CLEARANCE (MIN) BETWEEN UTILITIES AND COMPLY WITH TCEQ REQUIRED SEPERATION DISTANCES.
2. ALL 12" PVC PIPE TO BE C900.
3. ALL TRENCH COMPLETION THIS SHEET PER CONDITION "B" (SHEET 21) UNLESS OTHERWISE NOTED.
4. REFERENCE SHEET 15 FOR TRENCH EXCAVATION PROTECTION, CPS, SAWS, AND AT&T NOTES.

ADDITIONAL LEGEND/ABBREVIATIONS:

SS SANITARY SEWER
OU OVERHEAD UTILITY
G GAS

PIPE RESTRAINT

#> RESTRAINED LENGTH (FT)/ DIRECTION FROM FITTING

FR FULLY RESTRAINED BETWEEN FITTINGS

BY OTHERS
---------- SAW CUT
RECONSTRUCTED ROADWAY
ASPHALT LEVEL-UP AND OVERLAY BETWEEN RECONSTRUCTED SHOULDERS

LEGEND

PROPOSED UTILITIES: (SOLID/BOLD)
WATER MAIN
WATER SERVICE (SIZE/TYPE AS NOTED)

EXISTING UTILITIES: (OPEN/SHADED)
WATER MAIN
GAS MAIN
SAN. SEWER/MANHOLE
STORM SEWER
OVERHEAD UTIL./POLE
FIBEROPTIC CABLE

STATE OF TEXAS
STACEY L. MEICHERT
84036
LICENSED
PROFESSIONAL ENGINEER
7-20-11

Lockwood, Andrews & Newnam, Inc.
A LEO A DALY COMPANY
REGISTRATION NO: 2614

SAN ANTONIO WATER SYSTEM

FT. SAM HOUSTON TRANSPORTATION PROJECT

HARRY WURZBACH RD. AT RITTIMAN RD.

SAWS JOB NO. 08-5055

©2011 Texas Department of Transportation

SHEET 16 OF 22

DESIGNED:	FED. RD. DIV. NO.	STATE	PROJECT NO.			HIGHWAY NO.
CHECKED:	6	TEXAS				HARRY WURZBACH
DRAWN:	STATE DIST.	COUNTY	CONTROL NO.	SECTION NO.	JOB NO.	SHEET NO.
CHECKED:	SAT	BEXAR				267

L:\160-10240-009\4-0-Production\4-01-Drawings\Plan Sheets\Water\90% Submittal\15-Rittiman05*2011-02-03.dgn 7/20/2011 4:01:20 PM

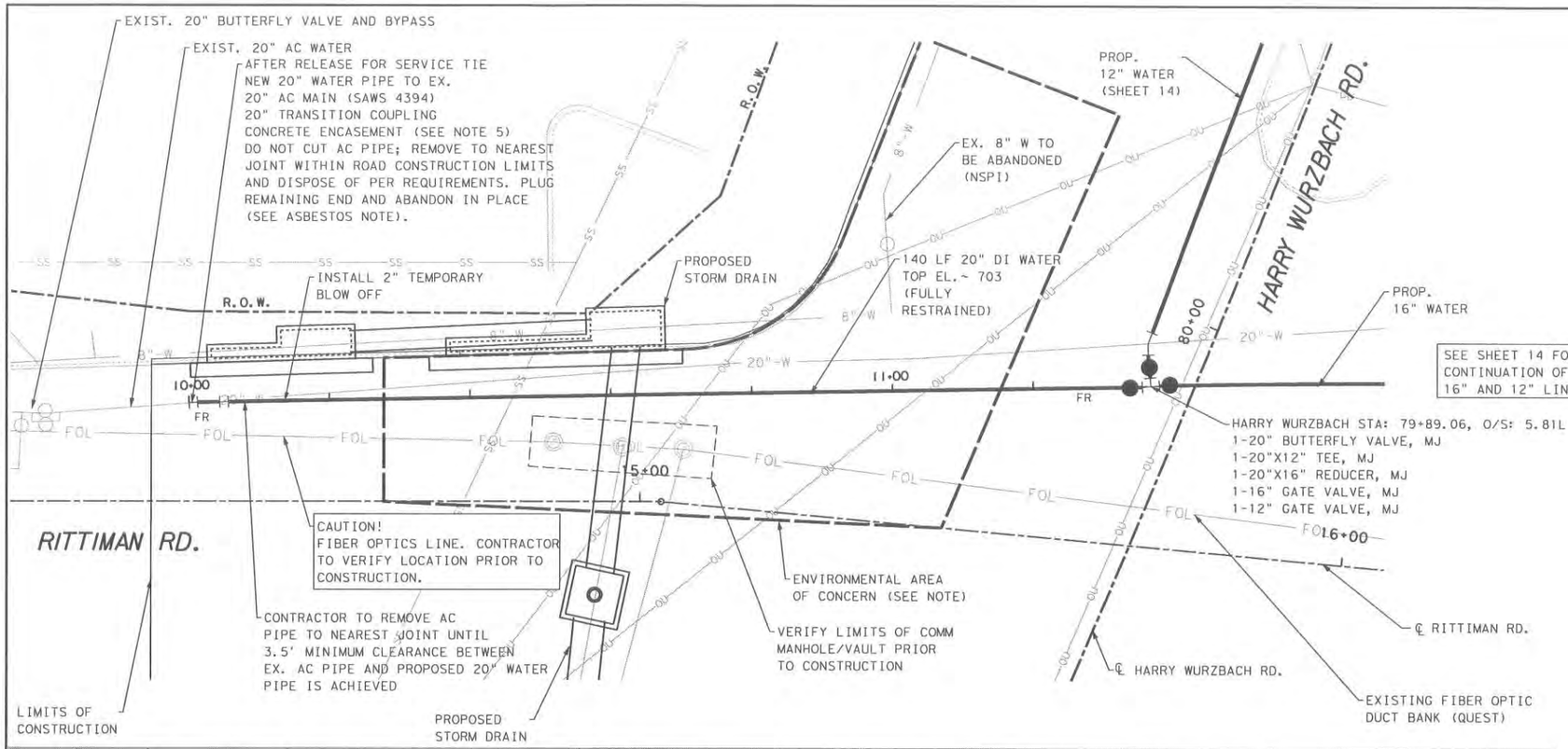

REFERENCE SHEET 14 FOR QUANTITIES

NOTES:

1. UTILITIES SHOWN ARE APPROXIMATE. CONTRACTOR TO VERIFY POSITION AND DEPTH OF ALL CROSSINGS AND TIE-INS PRIOR TO CONSTRUCTION AND MAKE ADJUSTMENTS AS NECESSARY TO MAINTAIN A 2' CLEARANCE (MIN) BETWEEN UTILITIES AND COMPLY WITH TCEQ REQUIRED SEPERATION DISTANCES.
2. ALL TRENCH COMPLETION THIS SHEET PER CONDITION "B" (SHEET 21)UNLESS OTHERWISE NOTED.
3. ALL 20" WATER PIPE TO BE DI.
4. SEE CPS, AT&T, SAWS, ASBESTOS, AND EXCAVATION NOTES SHEET 15
5. DO NOT CUT AC PIPE, REMOVE TO JOINT AND DISPOSE PER REQUIREMENTS. VERIFY LOCATION OF JOINT AND TIE-IN PRIOR TO CONSTRUCTION - NOTIFY ENGINEER IMMEDIATELY IF CONDITIONS PREVENT TIE-IN AS SHOWN IN PLAN.
6. FIBEROPTIC LINE AND MANHOLES PROPERTY OF QWEST, DURING PLAN PREPARATION INFORMATION PROVIDED INDICATES THAT DUCTS ARE EMPTY.

N

GRAPHIC SCALE

0 10 20

1"=20' H
1"=10' V
(11"X17")

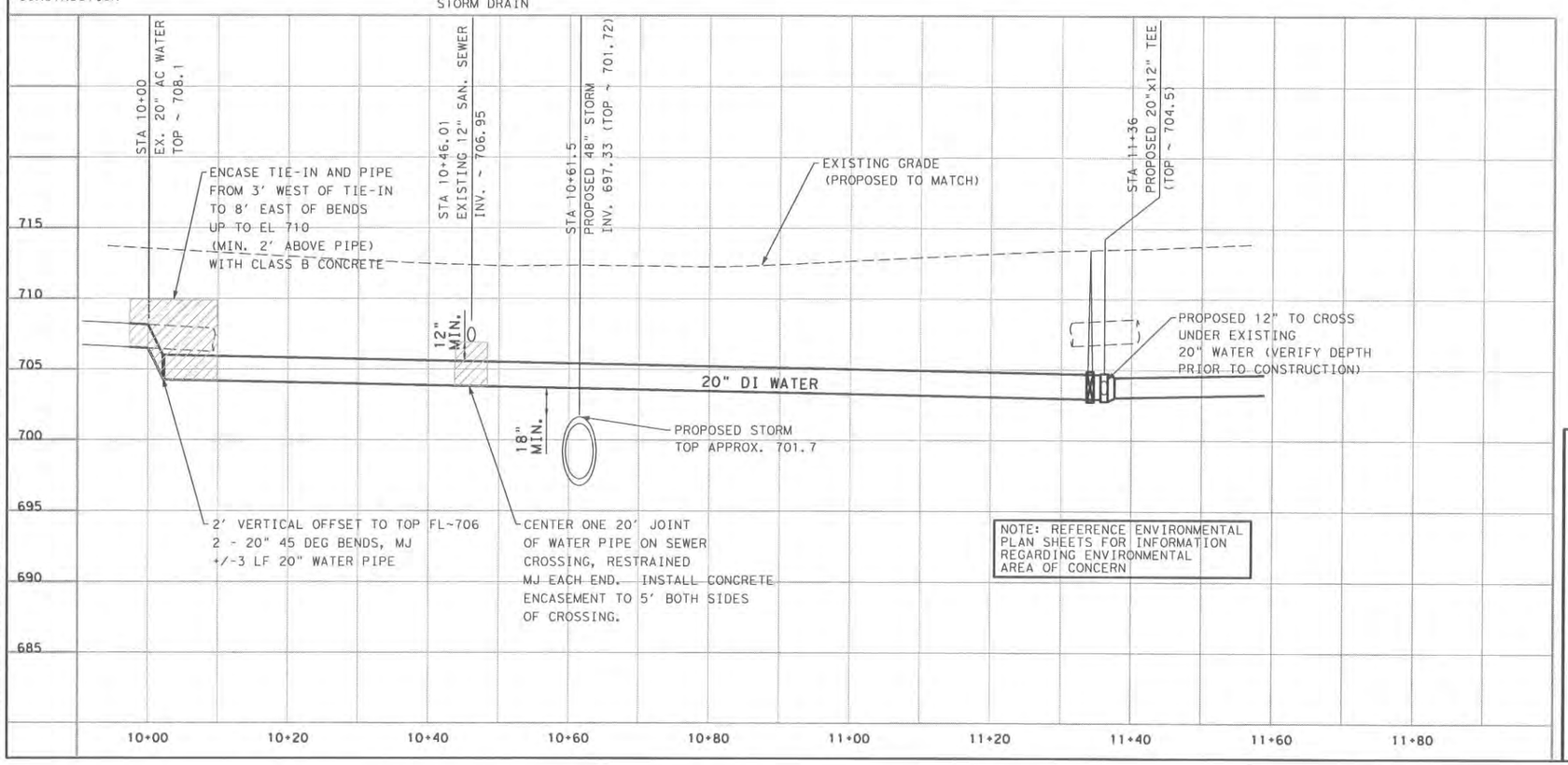

STATE OF TEXAS
STACEY L. WEICHERT
84036
LICENSED
PROFESSIONAL ENGINEER
5-6-11

LEGEND

PROPOSED UTILITIES: (SOLID/BOLD)
- WATER MAIN
- WATER SERVICE (SIZE/TYPE AS NOTED)

EXISTING UTILITIES: (OPEN/SHADED)
- WATER MAIN
- GAS MAIN
- SAN. SEWER/MANHOLE
- STORM SEWER
- OVERHEAD UTIL./POLE
- FIBEROPTIC CABLE

Lockwood, Andrews & Newnam, Inc.
A LEO A DALY COMPANY
REGISTRATION NO: 2614

SAN ANTONIO WATER SYSTEM

FT. SAM HOUSTON TRANSPORTATION PROJECT

HARRY WURZBACH RD. AT RITTIMAN RD.

SAWS JOB NO. 08-5055

©2011 Texas Department of Transportation

SHEET 17 OF 22

DESIGNED:	FED. RD. DIV. NO.	STATE	PROJECT NO.			HIGHWAY NO.
CHECKED:	6	TEXAS				HARRY WURZBACH
DRAWN:	STATE DIST.	COUNTY	CONTROL NO.	SECTION NO.	JOB NO.	SHEET NO.
CHECKED:	SAT	BEXAR				268

I:\160-10240-009\4-0-production\4-01-drawings\plan sheets\water\90% submittal\16-20IN-DETAIL.dgn
4/29/2011 2:37:43 PM

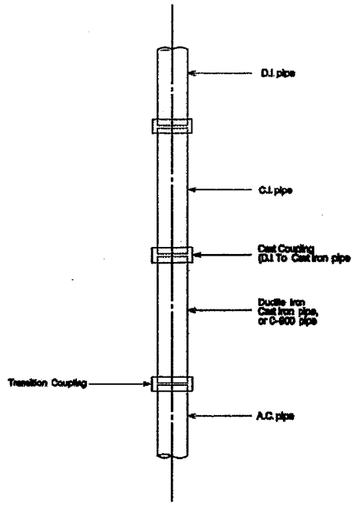

PROPERTY OF SAN ANTONIO WATER SYSTEM SAN ANTONIO, TEXAS	PIPE COUPLINGS	APPROVED March 2009	REVISED	DD-812-00	SHEET 1 OF 1

PROJECT:

COST: JOB NO:

ENGINEER:

CONTRACTOR:

San Antonio Water System

For Information Call
233-3500 (Business Hours) or 704-SAWS (After Hours)

A A

Provide adequate supports for sign (as site conditions may require) and keep sign a proper distance above prevailing grade to permit public viewing.

Grade

Notes:
- Two logos (with lettering) and sign border are SAWS blue
- All other lettering is black (sized to fit space)
- 4'x 8' sheet of 3/4" plywood, Grade A-C
- Signs to be placed in prominent location along a major thoroughfare within the project limits

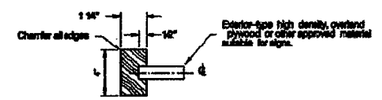

SECTION A-A

PROPERTY OF SAN ANTONIO WATER SYSTEM SAN ANTONIO, TEXAS	PROJECT SIGN FOR SAWS CONSTRUCTION	APPROVED JANUARY 2009	REVISED	DD-869-01	SHEET 1 OF 1

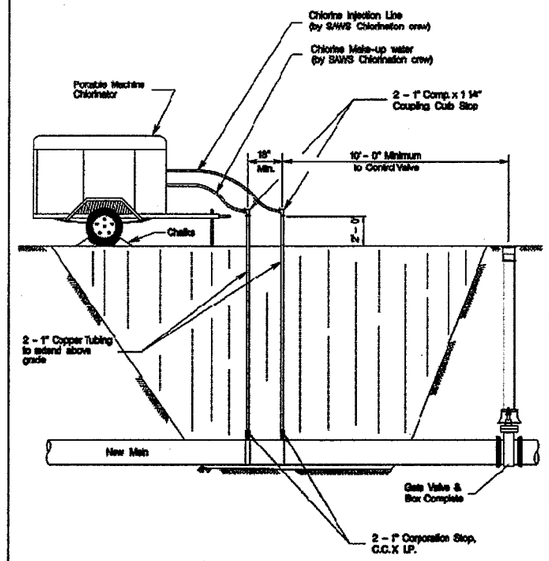

Note:
2 - 1 1/4" Solid Cap, Thd. to be installed on Corporation Stop after chlorination

PROPERTY OF SAN ANTONIO WATER SYSTEM SAN ANTONIO, TEXAS	STANDARD CHLORINATION INSTALLATION	APPROVED March 2009	REVISED	DD-847-01	SHEET 1 OF 1

PIPE TAPPING SCHEDULE

PIPE DIAMETER	SERVICE SIZE 3/4"	1"	1 1/2"	2"
6" A.C.	Tap With Service Saddle	Tap With Service Saddle	Tap With Service Saddle	Tap With Service Saddle
6" C.I. or D.I.	Tap	Tap	Tap With Service Saddle	Tap With Service Saddle
8" A.C.	Tap With Service Saddle	Tap With Service Saddle	Tap With Service Saddle	Tap With Service Saddle
8" C.I. or D.I.	Tap	Tap	Tap With Service Saddle	Tap With Service Saddle
8" PVC	Tap With Service Saddle	Tap With Service Saddle	Tap With Service Saddle	Tap With Service Saddle
10" A.C.	Tap With Service Saddle	Tap With Service Saddle	Tap With Service Saddle	Tap With Service Saddle
10" C.I. or D.I.	Tap	Tap	Tap With Service Saddle	Tap With Service Saddle
10" PVC	Tap With Service Saddle	Tap With Service Saddle	Tap With Service Saddle	Tap With Service Saddle
12" A.C.	Tap With Service Saddle	Tap With Service Saddle	Tap With Service Saddle	Tap With Service Saddle
12" C.I. or D.I.	Tap	Tap	Tap With Service Saddle	Tap With Service Saddle
12" PVC	Tap With Service Saddle	Tap With Service Saddle	Tap With Service Saddle	Tap With Service Saddle
16" A.C.	Tap With Service Saddle	Tap With Service Saddle	Tap With Service Saddle	Tap With Service Saddle
16" C.I. or D.I.	Tap	Tap	Tap With Service Saddle	Tap With Service Saddle

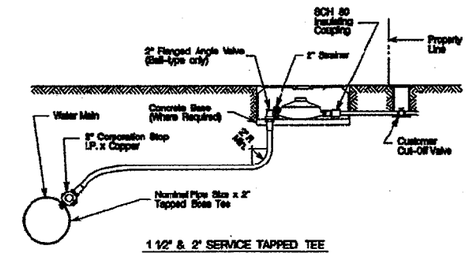

1 1/2" & 2" SERVICE TAPPED TEE

Note:
For direct tap to main, see Tapping Schedule

PROPERTY OF SAN ANTONIO WATER SYSTEM SAN ANTONIO, TEXAS	COPPER SERVICE INSTALLATION TAPPING SCHEDULE	APPROVED March 2009	REVISED	DD-824-01	SHEET 3 OF 3

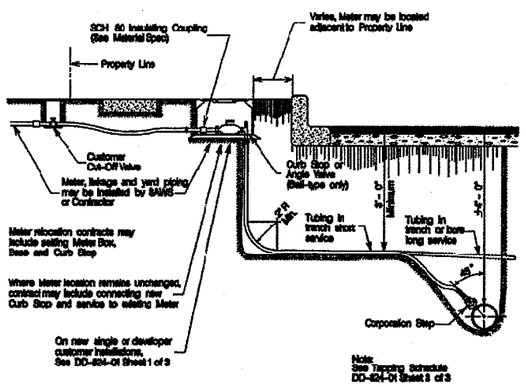

SERVICE RELAY, SERVICE AND METER RELOCATION

PROPERTY OF SAN ANTONIO WATER SYSTEM SAN ANTONIO, TEXAS	SERVICE RELAY, SERVICE RELOCATION 3/4" THRU 2"	APPROVED March 2009	REVISED	DD-824-02	SHEET 1 OF 1

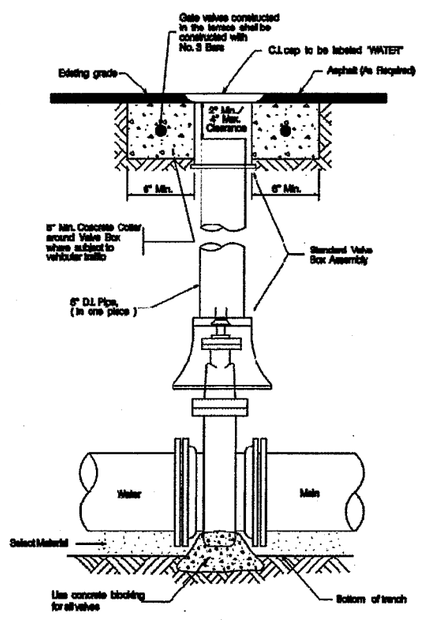

PROPERTY OF SAN ANTONIO WATER SYSTEM SAN ANTONIO, TEXAS	INSTALLATION OF NON-GEARED GATE VALVE WITH VALVE BOX AND EXTENSION	APPROVED March 2009	REVISED	DD-828-01	SHEET 1 OF 1

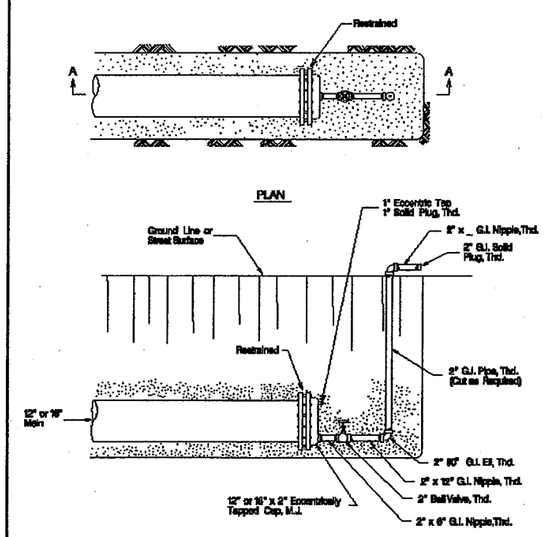

SECTION A-A

PROPERTY OF SAN ANTONIO WATER SYSTEM SAN ANTONIO, TEXAS	2" TEMPORARY BLOW-OFF ASSEMBLY ON 12" & 16" D.I. MAINS	APPROVED March 2009	REVISED	DD-844-01	SHEET 2 OF 4

Lockwood, Andrews & Newnam, Inc.
A LEO A DALY COMPANY
REGISTRATION NO. 2614

SAN ANTONIO WATER SYSTEM

FT. SAM HOUSTON TRANSPORTATION PROJECT

SAWS STD
WATER DETAILS

SAWS JOB NO. 08-5055

©2011
Texas Department of Transportation

SHEET 18 OF 22

DESIGNED:	FED. RD. DIV. NO.	STATE	PROJECT NO.			HIGHWAY NO.
CHECKED:	6	TEXAS				HARRY WURZBACH
DRAWN:	STATE DIST.	COUNTY	CONTROL NO.	SECTION NO.	JOB NO.	SHEET NO.
CHECKED:	SAT	BEXAR				269

I:\160-10240-009\4-0-production\4-01-drawings\plan sheets\water\90% submittal\16-SAWS-DETAIL.dgn 3/8/2011 6:05:31 PM

L:\160-10240-009\4-0-Production\4-01-Drawings\Plan Sheets\Water\90% Submittal\17-SAWS-DETAIL.dgn

3/9/2011 8:23:16 AM

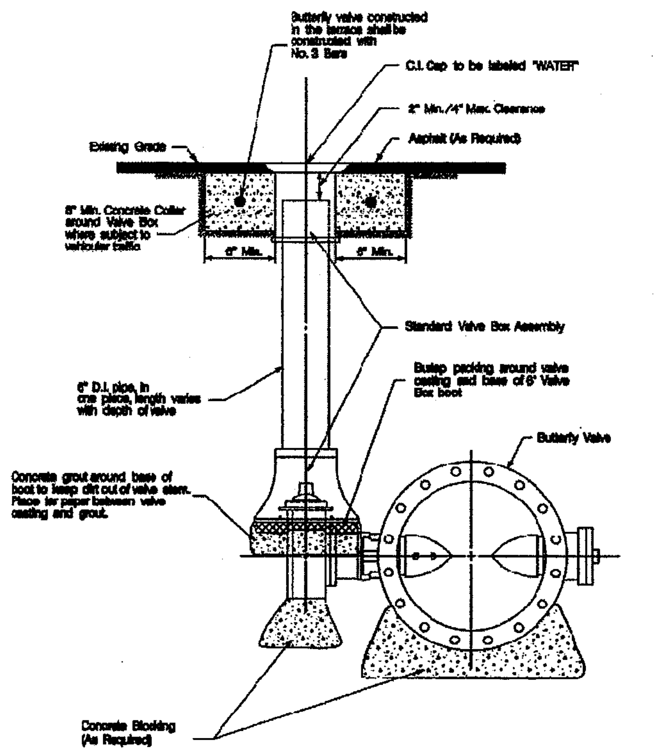

PROPERTY OF
SAN ANTONIO WATER SYSTEM
SAN ANTONIO, TEXAS

INSTALLATION OF BURIED BUTTERFLY VALVE WITH VALVE BOX COMPLETE

APPROVED: March 2008 | REVISED

DD-830-01 | SHEET 1 OF 4

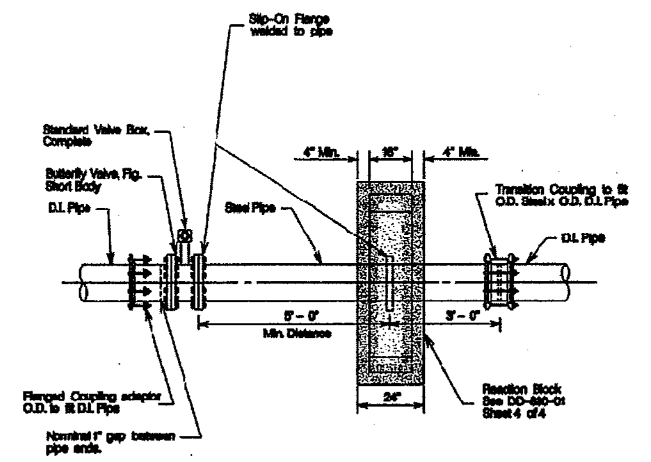

PROPERTY OF
SAN ANTONIO WATER SYSTEM
SAN ANTONIO, TEXAS

TYPICAL BUTTERFLY VALVE ARRANGEMENT FOR 20" AND LARGER D.I. MAIN

APPROVED: March 2008 | REVISED

DD-830-01 | SHEET 2 OF 4

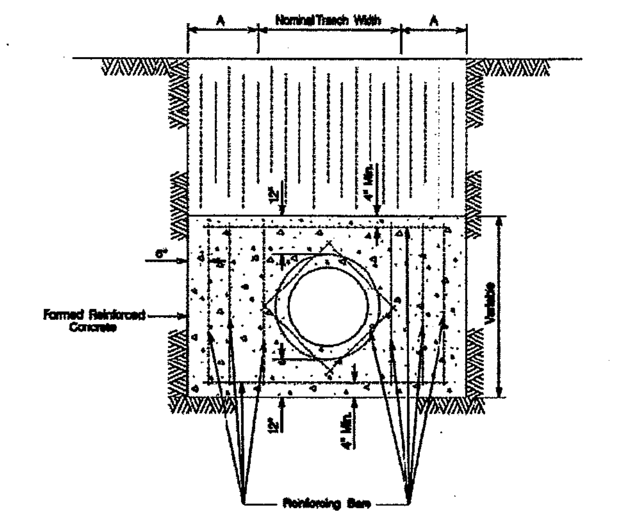

END VIEW OF REACTION BLOCK

Main Size	A (Min.)	Reinforcing Bar Size	Bearing Surface Required (in Sq. Ft.)
6"	12"	#4	3
8"	12"	#4	5
12"	18"	#4	8
16"	18"	#4	12
20"	28"	#5	16
24"	28"	#5	23
30"	38"	#5	35
36"	38"	#5	50
42"	38"	#5	70

PROPERTY OF
SAN ANTONIO WATER SYSTEM
SAN ANTONIO, TEXAS

CONCRETE REACTION BLOCK FOR BUTTERFLY VALVES & BLOW-OFF ASSEMBLIES ON D.I. & C.S.C. MAINS

APPROVED: March 2008 | REVISED

DD-830-01 | SHEET 4 OF 4

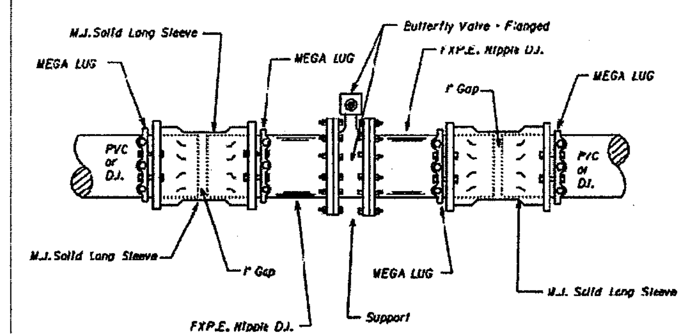

PROPERTY OF
SAN ANTONIO WATER SYSTEM
SAN ANTONIO, TEXAS

BUTTERFLY VALVE ASSEMBLY ON PVC OR D.I. PIPE N.T.S.

APPROVED: June 2009 | REVISED

DD-830-01 | SHEET 5 OF 5

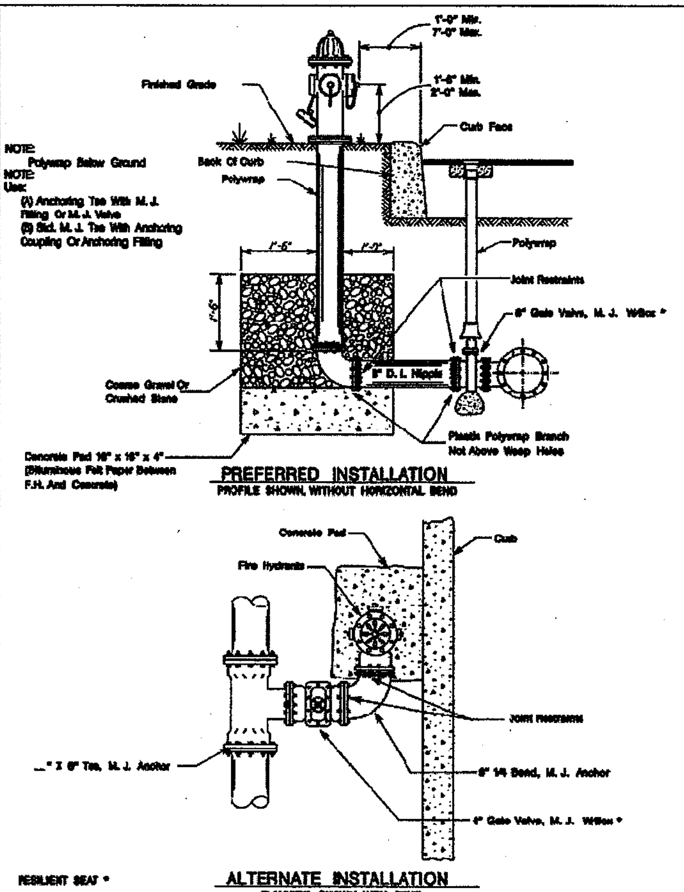

PROPERTY OF
SAN ANTONIO WATER SYSTEM
SAN ANTONIO, TEXAS

FIRE HYDRANT INSTALLATION (JOINT RESTRAINT)

APPROVED: March 2008 | REVISED: June 2009

DD-834-01 | SHEET 2 OF 2

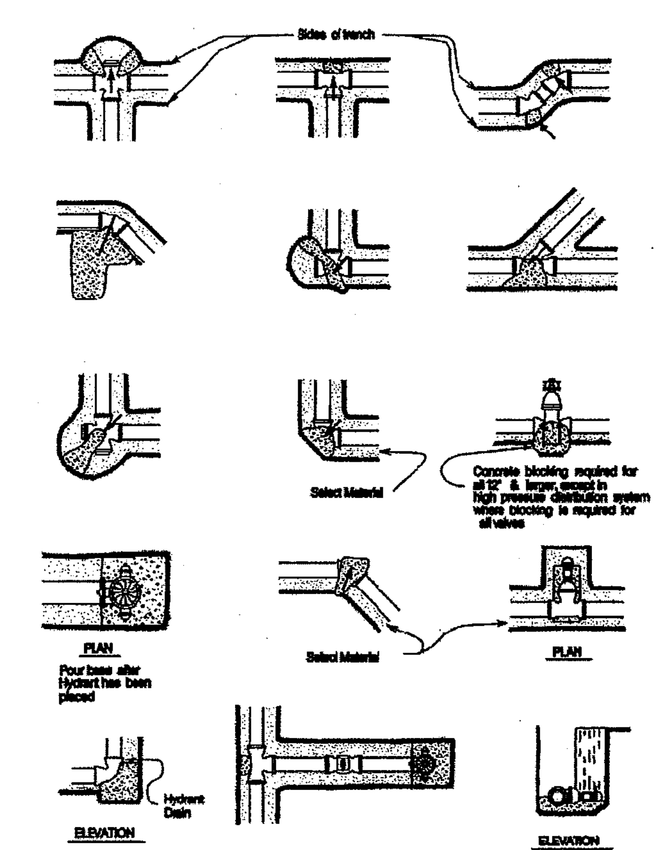

PROPERTY OF
SAN ANTONIO WATER SYSTEM
SAN ANTONIO, TEXAS

THRUST BLOCKS FOR FITTINGS (WATER ONLY)

APPROVED: March 2008 | REVISED

DD-839-01 | SHEET 1 OF 2

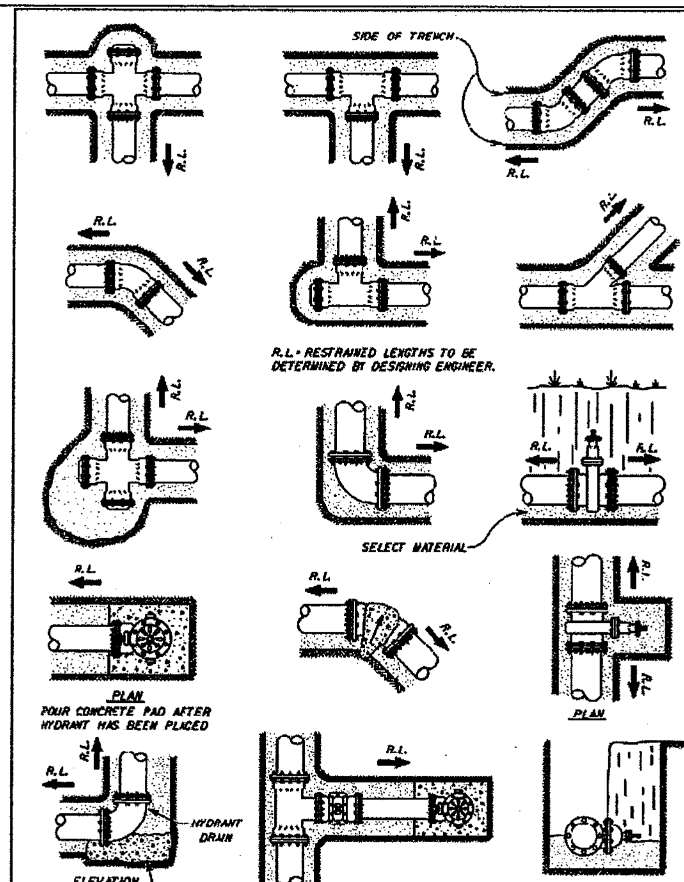

PROPERTY OF
SAN ANTONIO WATER SYSTEM
SAN ANTONIO, TEXAS

JOINT RESTRAINTS FOR FITTINGS (WATER ONLY)

APPROVED: MARCH 2008 | REVISED

DD-839-01 | SHEET 2 OF 2

Lockwood, Andrews & Newnam, Inc.
A LEO A DALY COMPANY
REGISTRATION NO: 2614

SAN ANTONIO WATER SYSTEM

FT. SAM HOUSTON TRANSPORTATION PROJECT

SAWS STD WATER DETAILS

SAWS JOB NO. 08-5055

© 2011 ® Texas Department of Transportation

SHEET 19 OF 22

DESIGNED:	FED. RD. DIV. NO.	STATE	PROJECT NO.			HIGHWAY NO.
CHECKED:	6	TEXAS				HARRY WURZBACH
DRAWN:	STATE DIST.	COUNTY	CONTROL NO.	SECTION NO.	JOB NO.	SHEET NO.
CHECKED:	SAT	BEXAR				270

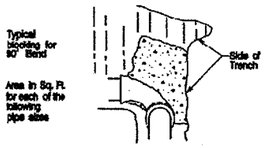

THRUST BLOCKING DESIGN

On basis of 200 psi water pressure used for tests, the blocking required for two types of soils are noted below. In one case, a soil pressure of 5000 psf is used for rock excavation and for soils other than rock a 3000 psf bearing soil pressure is used. The distribution on system is designed to operate with a maximum water pressure of 175 psi all calculations apply to A.C. Pipe Class 200 and Ductile Iron Pipe Class 2. PVC Pipe Class 200 (SDR 13.5)

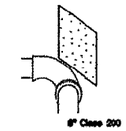

Square feet of blocking required for rock excavation

SIZE PIPE	TEES & DEAD ENDS	90° BENDS	45° BENDS	22.5° BENDS
6"	2	2	1	1
8"	3	4	2	1
12"	6	9	5	2
16"	11	16	8	4

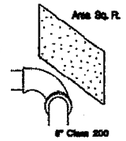

Square feet of blocking required for other than rock excavation

SIZE PIPE	TEES & DEAD ENDS	90° BENDS	45° BENDS	22.5° BENDS
6"	3	4	2	1
8"	4	8	4	2
12"	10	14	8	4
16"	18	25	14	7

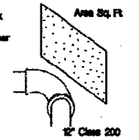

Blocking area for 200 psi tests & 175 psi working pressures.

Anchorage and blocking shall be provided in a manner as indicated by DD-839-01 and DD-839-02 in accordance with Section 5.4 Anchoring Blocking Standard Specifications for Water Works Construction except that 2500 psi will be required.

Transit 2500 psi concrete mix shall be used however for small volume requirements concrete mixed at job site will be acceptable only if a concrete mixer is used, all aggregate shall be clean and the field mix shall be in the ratio of 1:2:4 and contain not less than 4 sacks of cement per cu. yd.

PROPERTY OF SAN ANTONIO WATER SYSTEM SAN ANTONIO, TEXAS	THRUST BLOCKING FOR HIGH PRESSURE SYSTEM	APPROVED March 2008	REVISED	DD-839-02	SHEET 1 OF 1

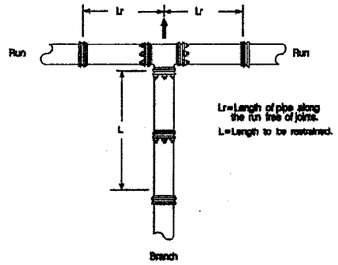

Lr=Length of pipe along the run free of joints.

L=Length to be restrained.

RESTRAINED LENGTH FOR TEES

PIPE SIZE (inch)	BRANCH SIZE (inch)	LENGTH OF RUN (ft.)	RESTRAINED LENGTH IN FEET, WHEN TEST PRESSURE = 200 psi	RESTRAINED LENGTH IN FEET, WHEN TEST PRESSURE = 150 psi
6	4	0	42	31
6	4	5	7	1
6	4	10	1	1
6	6	0	59	44
6	6	5	16	20
6	6	10	11	1
8	4	0	42	31
8	4	5	1	1
8	6	0	59	44
8	6	5	22	13
8	6	10	1	1
8	8	0	77	58
8	8	5	33	34
8	8	10	20	11
8	8	15	6	1

PROPERTY OF SAN ANTONIO WATER SYSTEM SAN ANTONIO, TEXAS	RESTRAINED LENGTHS FOR TEES	APPROVED March 2008	REVISED	DD-839-04	SHEET 1 OF 2

RESTRAINED LENGTH FOR TEES (Cont'd)

PIPE SIZE (inch)	BRANCH SIZE (inch)	LENGTH OF RUN (ft.)	RESTRAINED LENGTH IN FEET, WHEN TEST PRESSURE = 200 psi	RESTRAINED LENGTH IN FEET, WHEN TEST PRESSURE = 150 psi
12	4	0	42	31
12	4	5	1	1
12	6	0	59	44
12	6	5	13	1
12	6	10	1	1
12	8	0	77	58
12	8	5	42	23
12	8	10	7	1
12	8	15	1	1
12	12	0	109	82
12	12	5	66	59
12	12	10	63	35
12	12	15	39	12

RESTRAINED LENGTH DESIGN

Restrained length calculations are for P.V.C. pipe bedded in compacted granular material extending to the top of the pipe.The native soil material is assumed to be inorganic clay of high plasticity. Depth of bury is assumed to be 4 feet.

Note:
These calculations are provided for reference. The restrained length shall be designed based upon the conditions encountered during the installation.

PROPERTY OF SAN ANTONIO WATER SYSTEM SAN ANTONIO, TEXAS	RESTRAINED LENGTHS FOR TEES	APPROVED March 2008	REVISED	DD-839-04	SHEET 2 OF 2

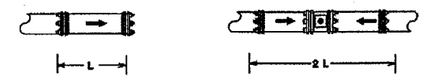

L=LENGTH TO BE RESTRAINED

PIPE SIZE (inch)	RESTRAINED LENGTH IN FEET, WHEN TEST PRESSURE = 200 psi	RESTRAINED LENGTH IN FEET, WHEN TEST PRESSURE = 150 psi
6	59	44
8	77	58
10	93	69
12	109	82

RESTRAINED LENGTH DESIGN

Restrained length calculations are for P.V.C. pipe bedded in compacted granular material extending to the top of the pipe. The native soil material is assumed to be inorganic clay of high plasticity. Depth of bury is assumed to be 4 feet.

Note:
These calculations are provided for reference. The restrained length shall be designed based upon the conditions encountered during the installation.

PROPERTY OF SAN ANTONIO WATER SYSTEM SAN ANTONIO, TEXAS	RESTRAINED LENGTHS FOR DEAD ENDS /INLINE VALVES	APPROVED March 2008	REVISED	DD-839-05	SHEET 1 OF 1

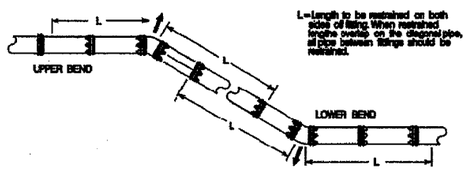

L=Length to be restrained on both sides of fitting. When restrained lengths overlap on the diagonal pipe, all pipe between fittings should be restrained.

PIPE SIZE (inch)	BEND ANGLE (deg.)	LOW SIDE DEPTH	UPPER BEND RESTRAINED LENGTH IN FEET TEST PRESSURE = 200 psi	LOWER BEND RESTRAINED LENGTH IN FEET TEST PRESSURE = 200 psi	UPPER BEND RESTRAINED LENGTH IN FEET TEST PRESSURE = 150 psi	LOWER BEND RESTRAINED LENGTH IN FEET TEST PRESSURE = 150 psi
6	45	5	24	5	18	6
6	22.5	5	12	4	9	3
6	11.25	5	6	2	4	1
6	45	10	24	5	18	4
6	22.5	10	12	2	9	2
6	11.25	10	6	1	4	1
8	45	5	32	11	24	8
8	22.5	5	16	5	11	4
8	11.25	5	8	3	6	2
8	45	10	32	7	24	2
8	22.5	10	16	3	11	2
8	11.25	10	8	2	6	1
12	45	5	45	16	34	12
12	22.5	5	22	7	16	6
12	11.25	5	11	4	8	3
12	45	10	45	10	34	7
12	22.5	10	22	5	16	3
12	11.25	10	11	2	8	2

RESTRAINED LENGTH DESIGN

Restrained length calculations are for P.V.C. pipe bedded in compacted granular material extending to the top of the pipe. The native soil material is assumed to be inorganic clay of high plasticity. Depth of bury is assumed to be 4 feet.

Note:
These calculations are provided for reference. The restrained length shall be designed based upon the conditions encountered during the installation.

PROPERTY OF SAN ANTONIO WATER SYSTEM SAN ANTONIO, TEXAS	RESTRAINED LENGTHS FOR VERTICAL OFFSETS	APPROVED March 2008	REVISED	DD-839-06	SHEET 1 OF 1

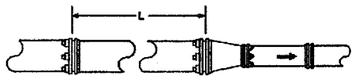

L=Length to be restrained

PIPE SIZE (inch)	SMALL SIZE (inch)	RESTRAINED LENGTH IN FEET, WHEN TEST PRESSURE = 200 psi	RESTRAINED LENGTH IN FEET, WHEN TEST PRESSURE = 150 psi
8	4	30	23
8	6	55	42
8	8	32	24
12	4	95	71
12	6	80	60
12	8	56	43

RESTRAINED LENGTH DESIGN

Restrained length calculations are for P.V.C. pipe bedded in compacted granular material extending to the top of the pipe. The native soil material is assumed to be inorganic clay of high plasticity. Depth of bury is assumed to be 4 feet.

Note:
These calculations are provided for reference. The restrained length shall be designed based upon the conditions encountered during the installation.

PROPERTY OF SAN ANTONIO WATER SYSTEM SAN ANTONIO, TEXAS	RESTRAINED LENGTHS FOR REDUCERS	APPROVED March 2008	REVISED	DD-839-07	SHEET 1 OF 1

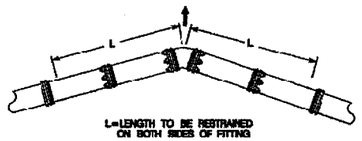

L=LENGTH TO BE RESTRAINED ON BOTH SIDES OF FITTING

PIPE SIZE (inch)	BEND ANGLE (deg)	RESTRAINED LENGTH IN FEET, WHEN TEST PRESSURE = 200 psi	RESTRAINED LENGTH IN FEET, WHEN TEST PRESSURE = 150 psi
6	90	23	17
6	45	9	7
6	22.5	5	3
6	11.25	2	2
8	90	30	22
8	45	12	9
8	22.5	6	4
8	11.25	3	2
12	90	43	32
12	45	16	13
12	22.5	8	6
12	11.25	4	3

RESTRAINED LENGTH DESIGN

Restrained length calculations are for P.V.C. pipe bedded in compacted granular material extending to the top of the pipe. The native soil material is assumed to be inorganic clay of high plasticity. Depth of bury is assumed to be 4 feet.

Note:
These calculations are provided for reference. The restrained length shall be designed based upon the conditions encountered during the installation.

PROPERTY OF SAN ANTONIO WATER SYSTEM SAN ANTONIO, TEXAS	RESTRAINED LENGTHS FOR HORIZONTAL BENDS	APPROVED March 2008	REVISED	DD-839-08	SHEET 1 OF 1

Lockwood, Andrews & Newnam, Inc.
A LEO A DALY COMPANY
REGISTRATION NO: 2614

SAN ANTONIO WATER SYSTEM

FT. SAM HOUSTON TRANSPORTATION PROJECT

SAWS STD
WATER DETAILS

SAWS JOB NO. 08-5055

©2011 Texas Department of Transportation

SHEET 20 OF 22

DESIGNED:	FED. RD. DIV. NO.	STATE	PROJECT NO.			HIGHWAY NO.
CHECKED:	6	TEXAS				HARRY WURZBACH
DRAWN:	STATE DIST.	COUNTY	CONTROL NO.	SECTION NO.	JOB NO.	SHEET NO.
CHECKED:	SAT	BEXAR				271

I:\160-10240-009\4-0-production\4-01-drawings\plan sheets\water\90% submittal\18-SAWS-DETAIL.dgn 3/8/2011 6:05:37 PM

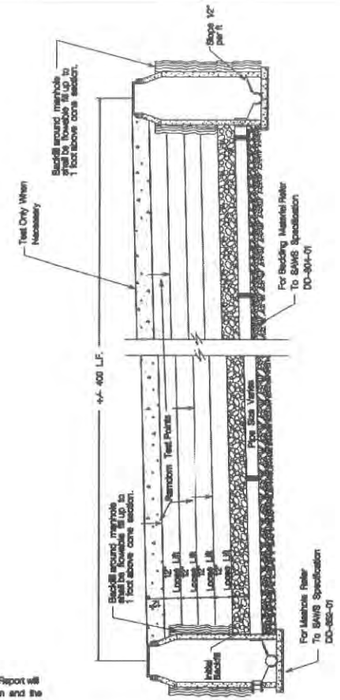

NOTE:
The Compaction Report will indicate the station and the depth of each test point

PROPERTY OF SAN ANTONIO WATER SYSTEM SAN ANTONIO, TEXAS	TRENCH COMPACTION DETAIL	APPROVED MARCH 2008	REVISED JUNE 2009	SHEET 1 OF 1
		DD-804-02		

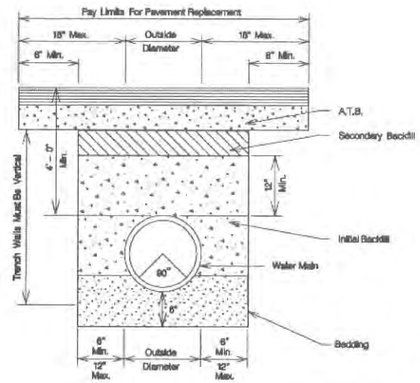

NOTE : THIS DETAIL APPLIES TO PLACEMENT OF PIPE IN TRENCH UP TO SECONDARY BACKFILL ONLY; PAY LIMITS FOR PIPE IN TRENCH ARE AS SHOWN HORIZONTALLY AND VERTICALLY TO UPPER LIMIT OF SECONDARY BACKFILL.

FOR FORT SAM PROJECT 08-5055:
REFER TO PROJECT TRENCH SURFACE COMPLETION DETAILS FOR ITEMS ABOVE SECONDARY BACKFILL INCLUDING PROJECT-SPECIFIC PAY LIMITS

PROPERTY OF SAN ANTONIO WATER SYSTEM SAN ANTONIO, TEXAS	POTABLE AND RECYCLED WATER MAIN DETAIL	APPROVED March 2008	REVISED	SHEET 1 OF 1
		DD-812-01		

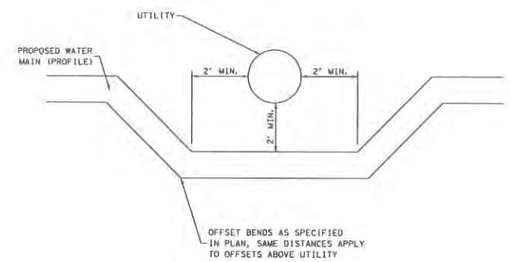

NOTE: IN ADDITION TO THE ABOVE CLEARANCES, CONTRACTOR SHALL COMPLY WITH ALL REQUIREMENTS OF TCEQ PERTAINING TO WATER AND SEWER CROSSINGS. CONTRACTOR SHALL VERIFY ALL CROSSINGS PRIOR TO CONSTRUCTION AND NOTIFY THE ENGINEER IMMEDIATELY IF CONFLICTS EXIST. SAWS SHALL APPROVE ANY PROPOSED FIELD ADJUSTMENTS.

TYP. UTILITY CROSSING

N. T. S.

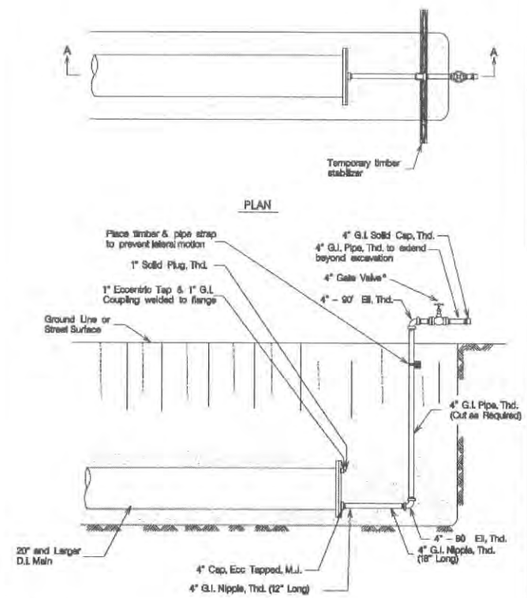

PROPERTY OF SAN ANTONIO WATER SYSTEM SAN ANTONIO, TEXAS	4" TEMPORARY BLOW-OFF ASSEMBLY 20" AND LARGER D.I. MAIN	APPROVED March 2008	REVISED	SHEET 1 OF 4
		DD-844-04		

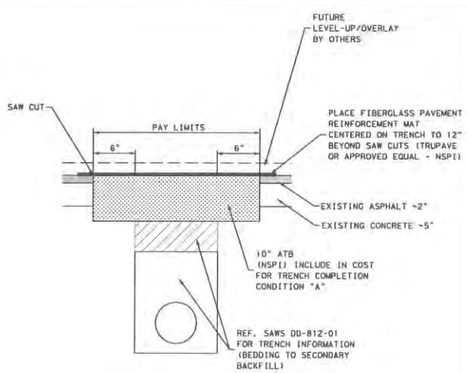

CONDITION "A" APPLIES TO TRENCHES INSTALLED WITHIN EXISTING PAVEMENT WHERE FULL DEPTH RECONSTRUCTION WILL NOT OCCUR AND ROADWAY WILL RECEIVE ASPHALT LEVEL-UP AND OVERLAY ONLY (BY OTHERS) SURFACE COMPLETION CONSISTS OF PLACEMENT OF 10" ASPHALT TREATED BASE AND FIBERGLASS MAT

SURFACE AREA BASED ON LIMITS SHOWN.
MAT TO BE SUBSIDIARY TO TO INSTALLATION
(NO SEPERATE MEASUREMENT OR PAYMENT)

CUT AND REPLACE PAVEMENT

TRENCH SURFACE COMPLETION
CONDITION "A"

N. T. S.

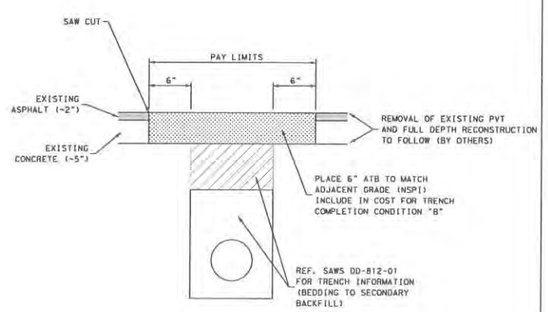

CONDITION "B" APPLIES TO TRENCHES INSTALLED WITHIN EXISTING PAVEMENT WHERE FULL DEPTH RECONSTRUCTION AND/OR RIGHT-OF-WAY RESTORATION WILL FOLLOW (BY OTHERS) - SURFACE COMPLETION CONSISTS OF PLACEMENT OF TEMPORARY PAVEMENT. (6" ASPHALT TREATED BASE)

SURFACE AREA BASED ON LIMITS SHOWN

CUT AND REPLACE PAVEMENT

TRENCH SURFACE COMPLETION
CONDITION "B"

N. T. S.

STATE OF TEXAS
STACEY L. WEICHERT
84036
LICENSED
PROFESSIONAL ENGINEER
6-6-11

Lockwood, Andrews & Newnam, Inc.
A LEO A DALY COMPANY
REGISTRATION NO: 2614

SAN ANTONIO WATER SYSTEM

FT. SAM HOUSTON TRANSPORTATION PROJECT

SAWS STD WATER DETAILS

SAWS JOB NO. 08-5055

©2011 Texas Department of Transportation

SHEET 21 OF 22

DESIGNED:	FED. RD. DIV. NO.	STATE	PROJECT NO.			HIGHWAY NO.
CHECKED:	6	TEXAS				HARRY WURZBACH
DRAWN:	STATE DIST.	COUNTY	CONTROL NO.	SECTION NO.	JOB NO.	SHEET NO.
CHECKED:	SAT	BEXAR				272

I:\160-10240-009\4-0-production\4-01-drawings\plan sheets\water\90% submittal\19-SAWS-DETAIL.dgn 4/29/2011 2:37:49 PM

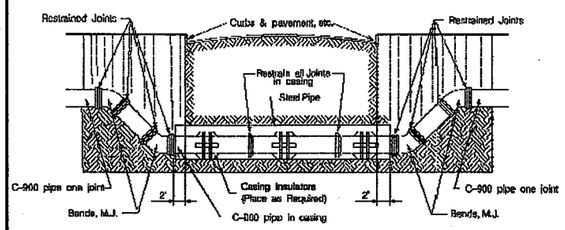

Notes:
Fittings shall be paid for by separate item
Joint restraints shall be approved as specified in Material Specification Item 95-10

PROPERTY OF SAN ANTONIO WATER SYSTEM SAN ANTONIO, TEXAS	INSTALLATION OF PIPE IN BORE	APPROVED March 2009	REVISED June 2009
		DD-856-02	SHEET 1 OF 3

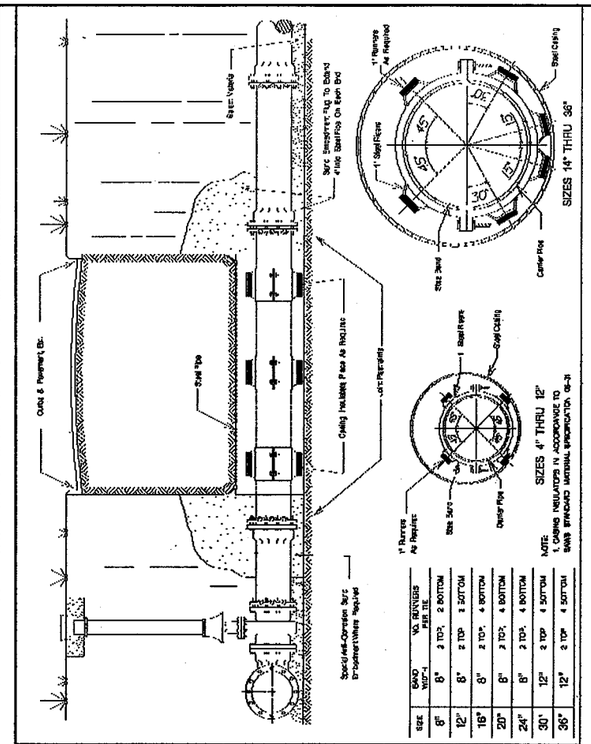

SIZE	BAND "WIDTH"	VIS. BENDERS PER TIE	
6"	8"	2 TOP,	2 BOTTOM
12"	8"	2 TOP	2 BOTTOM
18"	8"	2 TOP,	4 BOTTOM
20"	8"	2 TOP,	4 BOTTOM
24"	8"	2 TOP,	4 BOTTOM
30"	12"	2 TOP	4 BOTTOM
36"	12"	2 TOP	4 BOTTOM

NOTE:
1. CASING INSULATORS IN ACCORDANCE TO SAWS STANDARD MATERIAL SPECIFICATION 95-20

PROPERTY OF SAN ANTONIO WATER SYSTEM SAN ANTONIO, TEXAS	PAVEMENT INSTALLATION OF PIPE IN BORE (JOINT RESTRAINT)	APPROVED March 2008	REVISED
		DD-856-02	SHEET 2 OF 3

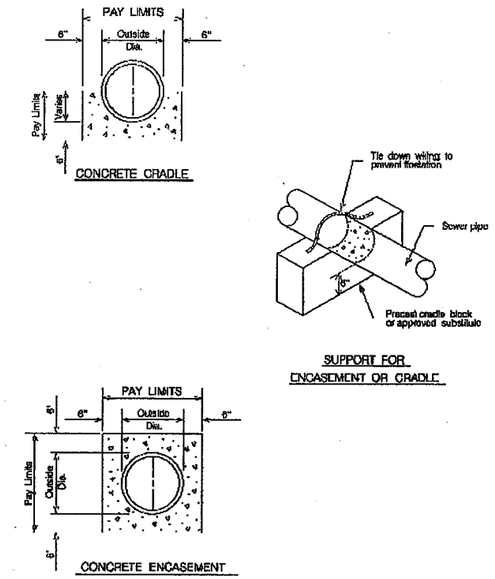

Notes:
1) All concrete encasement shall be poured at a plane 6" above the pipe between excavated trench walls.
2) All sewer pipe with less than 5' of cover to subgrade shall be concrete encased.
3) All Force mains shall be provided with thrust blocks, where changes in direction occur, at Tees, Bends, Crosses, changes in size, stops, or as directed by SAWS.

PROPERTY OF SAN ANTONIO WATER SYSTEM SAN ANTONIO, TEXAS	TYPICAL CONCRETE ENCASEMENT DETAILS	APPROVED March 2009	REVISED
		DD-858-01	SHEET 1 OF 1

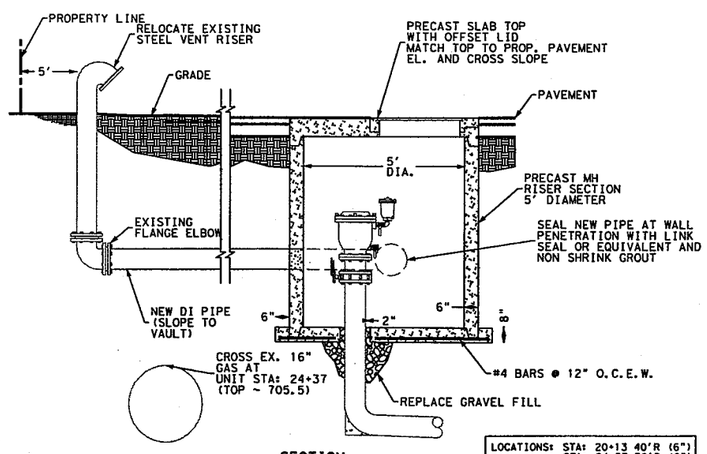

SECTION

LOCATIONS: STA: 20+13 40'R (6")
STA: 24+37 38'R (6")
STA: 53+65 33'R (4")

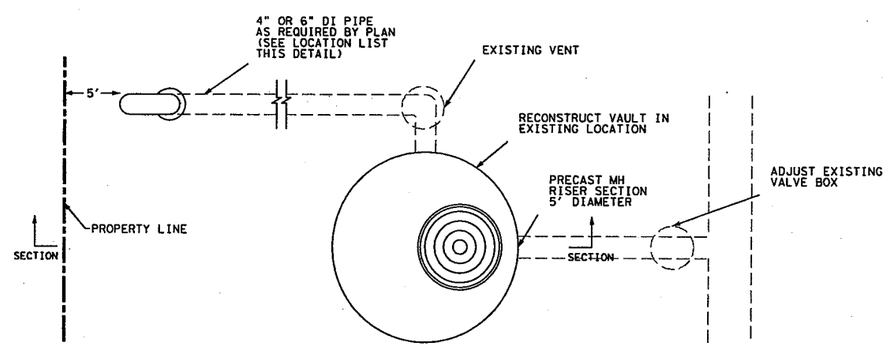

PLAN

RECYCLED WATER VAULT/
VENT ADJUSTMENT
N.T.S.

STATE OF TEXAS
STACEY L. WEICHERT
84036
LICENSED
PROFESSIONAL ENGINEER
3-8-11

Lockwood, Andrews & Newnam, Inc.
A LEO A DALY COMPANY
REGISTRATION NO: 2614

LEGEND

PROPOSED UTILITIES: (SOLID/BOLD)
WATER MAIN
WATER SERVICE (SIZE/TYPE AS NOTED)

EXISTING UTILITIES: (OPEN/SHADED)
WATER MAIN
GAS MAIN
SAN. SEWER/MANHOLE
STORM SEWER
OVERHEAD UTIL./POLE
FIBEROPTIC CABLE

SAN ANTONIO WATER SYSTEM

FT. SAM HOUSTON TRANSPORTATION PROJECT

SAWS STD WATER DETAILS

SAWS JOB NO. 08-5055

©2011 Texas Department of Transportation

SHEET 22 OF 22

DESIGNED:	FED. RD. DIV. NO.	STATE	PROJECT NO.			HIGHWAY NO.
CHECKED:	6	TEXAS				HARRY WURZBACH
DRAWN:	STATE DIST.	COUNTY	CONTROL NO.	SECTION NO.	JOB NO.	SHEET NO.
CHECKED:	SAT	BEXAR				273

I:\160-10240-009\4-0-production\4-01-drawings\plan sheets\water\90% submittal\22-manhole*loc03.dgn 3/8/2011 6:05:39 PM