ADDENDUM NO. 1

February 24, 2011
09076.D

to the construction documents
Beacon Hill Linear Park Phase One
CIMS Project No. 2600572

RVK
745 E. Mulberry, 6th Floor
San Antonio, Texas 78212-3186

REGISTERED LANDSCAPE ARCHITECT
LARRY A. HICKS
910
STATE OF TEXAS
2/24/11

This addendum is hereby made a part of the construction documents to the same extent as though it were originally included therein. This addendum shall take precedence over the original construction documents where its provisions apply. The contractor shall be required to sign an acknowledgement of the receipt of this addendum at the time he/she receives it.

ITEM NO. DESCRIPTION

GENERAL INFORMATION

No changes

PROJECT MANUAL

TABLE OF CONTENTS

1.01 Insert the Civil Engineer's sealed table of contents sheet. Refer to ATTACHMENT "A"; 1 page.

SECTION 010 INVITATION FOR BIDS (IFB)

1.02 Substitute and utilize the revised "FORMAL INVITATION FOR BIDS (IFB) AND CONTRACT" per ATTACHMENT "B", 2 pages. **BID OPENING DATE IS MOVED TO MARCH 8, 2011.**

1.03 Insert the Addendum Acknowledgement Form. Refer to ATTACHMENT "C", 1 page. Submit the form signed and dated with the bid proposal package indicating receipt of the number of Addendums received.

SECTION 050 SBEDA GUIDELINES AND ATTACHMENTS

1.04 Remove Contract and Subcontract Activity Form.

1.05 Remove Section 3 Utilization Plan.

NOTE: ATTACHMENTS "D", "E", AND "F" NOT USED.

SECTION 00220 GEOTECHNICAL REPORT

1.06 Insert "Subsurface Exploration and Foundation Analysis" prepared by inTEC, ATTACHMENT "G", 58 pages.

SECTION 01500 TEMPORARY FACILITIES AND CONTROLS

1.07 Page 2, Add Section 1.10 PROJECT SIGNS, insert the insert the following paragraphs "A", "B", and "C".

A. DESCRIPTION: This item shall consist of providing, installing, maintaining, and (at the completion of the project) removing two (2) 4' x 8' project signs. The signs shall conform to the configuration and details indicated on a special sheet in the project specifications title PROJECT SIGN DETAILS. These signs shall be installed at location(s) to be determined by the inspector.

B. MATERIAL: The signs shall be made of ¾" plywood, grade A-C or better and each shall be mounted on two(2) 4" x 4" x 12'-0" posts. INSTALLATION: The installation will require embedding all posts a minimum of 3'-0" below the ground.

1.09 Insert graphic of a Project Sign, per ATTACHMENT "H", 1 page.

SECTION 02721 AGGREGATE BASE COURSE

1.10 Substitute the revised Section 02721 per Attachment "I", 3 pages.

SECTION 02871 SITE AND STREET FURNISHINGS

1.11 Page 2, Section 2.01, Modify paragraph "D" per the following:
"D. Pet Waste Bag Dispenser, post and sign: Dispenser model #1002-2, .08 powder coated aluminum dispenser with extra set of keys. Post model #1302, 4' galvanized telescoping post with rain cap. Sign: 18" x 12" aluminum pet sign.

SECTION 02791 PLAYGROUND SURFACING

1.12 Page 3, Section 2.02, Modify paragraph "A" item 4 to the following:
4. Wear Layer Color(s): One hundred (100) percent color as selected from manufacturer's full range of colors.

SECTION 02881 PLAYGROUND EQUIPMENT

1.13 Insert "36033 Bongos" cut sheet per ATTACHMENT "J", 4 pages.

1.14 Insert "FREEGAME Goals" cut sheet per ATTACHMENT "K", 2 pages.

1.15 Insert "Instruction Manual BA871,BA872"per ATTACHMENT "L", 3 pages.

SECTION 10400 IDENTIFICATION DEVICES

1.16 Page 1, Section 1.01, Modify all Paragraphs per the following:
"A. Interpretive Signage
1. Play Age Group Area Designation Signage
2. Rain Garden Interpretive Signage
3. No Mow Signage
4. Water Use at Water Tap Signage
B. Park Prohibitions Signage
C. Post and Panel Signage
D. Traffic Signs"

1.17 Page 2, Section 2.02, Modify Paragraph A.1.Graphics Panel: per the following:
"a. Digitally imaged 3mm aluminum composite material, Signabond Lite, manufactured by Signabond (478) 374-4564.
b. Color to be chosen from manufacturer's full line of offerings.
c. Graphic prints to be exterior specifications large format printing
d. Laminate graphics with 3M Scotchguard, Graphic and Surface protection Film 8991R
e. Graphics provided in digital format by Landscape Architect.
f. Provide one panel for installation."

SECTION 13660 SOLAR LIGHTING

1.18 Page 1, Section 1.01, Modify paragraph "A" per the following:
"A. Solar powered lighting mounted on **steel** pole with concrete foundation
B. The Contractor shall be responsible for performing, preparing, and providing all labor, materials and equipment required for each **steel** pole foundation as detailed on plans and specified herewith."

1.19 Page 1, Section 1.05, Modify Paragraph "B", Item 6 per the following:
"6. Steel Poles – Manufacturer's standard warranty"

1.20 Page 2, Section 2.01, Modify Paragraphs "A" and B", per the following:
" A. Lighting Equipment: Solar-Path, Incl. 1560 Broadway, Tenth Floor, New York, NY 10036; www.solarpathusa.com; contact Steve Tristan (210)349-2131.
B. Poles:American Lite Pole, 2800 S. Hulen Street, Suite 200, Fort Worth, TX 76109; contact Steve Tristan (210)349-2131."

1.21 Page 2, Section 2.02, Modify Paragraph "A" per the following:
"A. MODEL: Highlight ML0-80 solar street light with enhanced brightness option and wide angle light spread option.
1. Lamp: 540 / 648 x Ultra-Bright LED
2. LED Bank Lens: U.V. treated polycarbonate reflector.
3. Solar Panel: Mono/ poly crystalline silicon, 130W
4. Battery: Deep cycle AGM/Gel-Cell; 12 VDC 65AH"

1.22 Page 2, Modify Section 2.03 per the following:
"2.03 STEEL POLE:
A. Pole Catalogue No: SNS-30-40-7-AB-PCDB-T35R-BC."

1.23 Insert "Highlight Series ML-80" per ATTACHMENT "M", 2 pages

1.24 Insert "Area Lighting Poles" per ATTACHMENT "N", 2 pages

SECTION 15210 PLUMBING

1.25 Page 2, Section 2.01, Modify Paragraph "J" per the following:
"J. Drinking Fountain: Model 410 Pedestal Drinking Fountain with pet fountain, human fountain and red-eye sensor. Provide in hot-dipped galvanized finish with surface mount. Manufactured by Most Dependable Fountains (800) 552-6331."

CONSTRUCTION DRAWINGS

SHEET G0.1 GENERAL NOTES

1.26 Section "Planting Notes", Modify Item 5, replacing "02910 Soil Preparation" with "02316 Fill and Backfill"

1.27 Section "Planting Notes", Modify Item 6, replacing "02910 Soil Preparation" with "02316 Fill and Backfill"

1.28 Section "Planting Notes", Modify Item 7, replacing "02910 Soil Preparation" with "02316 Fill and Backfill"

SHEET L1.1 HARDSCAPE PLAN

1.29 Substitute the revised SHEET L1.1 – HARDSCAPE PLAN for the SHEET L1.1 – HARDSCAPE PLAN per ATTACHMENT "O", 1 page, 24"x36"

SHEET L1.2 HARDSCAPE PLAN

1.30 Substitute the revised SHEET L1.2 – HARDSCAPE PLAN for the SHEET L1.2 – HARDSCAPE PLAN per ATTACHMENT "P", 1 page, 24"x36"

SHEET L1.3 HARDSCAPE PLAN

1.31 Substitute the revised SHEET L1.3 – HARDSCAPE PLAN for the SHEET L1.3 – HARDSCAPE PLAN per ATTACHMENT "Q", 1 page, 24"x36"

SHEET L1.4 ENLARGED PLAY AREA

1.32 Substitute the revised SHEET L1.4 – ENLARGED PLAY AREA and replace SHEET L1.4 – ENLARGED PLAY AREA in its entirety per ATTACHMENT "R", 1 page, 24"x36"

SHEET L1.9 HARDSCAPE DETAILS

1.33 Detail 2/L1.9 – PET WASTE DISPENSER, SHEET L1.9, Substitute the REVISED DETAIL 2/L1.9 – PET WASTE DISPENSER per ATTACHMENT "S", 8-1/2" X 11""

SHEET L1.12 SIGN DETAILS

1.34 Detail 1/L1.12 – SIGN TY 1- BEACON, SHEET L1.12, Substitute the REVISED DETAIL 1/L1.12 – SIGN TY 1 – BEACON per ATTACHMENT "T", 11" X 17"

1.35 Detail 2/L1.12 – SIGN TY 2 - PARK, SHEET L1.12, Substitute the REVISED DETAIL 2/L1.12 – SIGN TY 2 – PARK per ATTACHMENT "U", 11" X 17"

SHEET L1.14 PLUMBING PLAN

1.36 Substitute the revised SHEET L1.14 – PLUMBING PLAN for the SHEET L1.14 – PLUMBING PLAN per ATTACHMENT "V", 1 page, 24"x36"

SHEET L1.22 HARDSCAPE ALTERNATES PLAN

1.37 Detail 3/L1.22 – MULTI-SPORT GOAL FOOTING, SHEET L1.22, Add Note per the following:
"NOTE: MULIT-SPORT GOAL SYSTEM AND FOOTING TO BE INSTALLED BY CERTIFIED KOMPAN INSTALLER. REFER TO SPECIFICATION 02881."

SHEET C6.0 UTILITY PLAN - CIVIL

1.38 Modify Keynote No. 5 per the following:
"NEW DRINKING FOUNTAIN, REF. LANDSCAPE DETAIL 1/L1.9"

SHEET C6.1 UTILITY PLAN - CIVIL

1.39 Modify Keynote No. 5 per the following:
"NEW DRINKING FOUNTAIN, REF. LANDSCAPE DETAIL 1/L1.9"

SHEET C6.2 UTILITY PLAN - CIVIL

1.40 Modify Keynote No. 5 per the following:
"NEW DRINKING FOUNTAIN, REF. LANDSCAPE DETAIL 1/L1.9"

_____

Larry A. Hicks, RLA, ASLA
Principal
RVK Inc.

END OF ADDENDUM NO. 1
BEACON HILL LINEAR PARK

01575 Temporary Erosion and Sedimentation Control

02225 Demolition
02260 Excavation Support and Protection
02310 Grading
02319 Trenching and Backfilling
02338 Subgrade Preparation
02341 Soil Stabilization
02510 Water Utility Distribution Piping
02511 Water Distribution Equipment
02630 Storm Drainage Utilities
02635 Storm Drainage Structures
02640 Manhole and Covers
02721 Aggregate Base Course
02740 Asphalt Paving
02770 Concrete Sidewalks and Curbs and Gutters
02786 Aggregate Pathways
02843 Parking Bumpers

03200 Concrete Reinforcement
03300 Cast-in-place concrete

07900 Joint Sealers

STATE OF TEXAS
TRAVIS R. ELSETH
99254
LICENSED
PROFESSIONAL ENGINEER
2/21/11

CITY OF SAN ANTONIO

Issued By: CIMS Department
ID NO.: 26-0072-05-01

Date Issued: February 13, 2011

FORMAL INVITATION FOR BIDS (IFB) and CONTRACT
BEACON HILL LINEAR PARK PHASE I - (Prj. No. 26-00572)

Sealed bids, subject to the Terms and Conditions of this Invitation for Bids and other contract provisions, will be received at the Office of the City Clerk, City Hall, 100 Military Plaza, 2nd floor San Antonio, Tx 78205 until **2:00 p.m. CST** on **Tuesday, March 8, 2011** and publicly read aloud at **114 W. Commerce, Municipal Plaza Building "B" Room**. This is the *solicitation deadline*. Bids must be submitted in a sealed envelope and clearly marked with the due date of bid, bidder name, Project Name and ID NO. The City is not responsible for submissions not clearly and appropriately marked. Late submissions will be rejected and returned to bidder. A Non-Mandatory Pre-submittal conference will be held at 1406 Michigan Ave. San Antonio, Tx 78201 on February 18, 2011 at 9:30am.

TABLE A - This invitation includes the following Contract Documents:

010 Invitation for Bids and Contract Signature Page Beacon Hill

020 Bid Form

025 Unit Pricing Form

030 Contractor's Qualification/Information Statement

040 Standard Instructions to Respondent

050 SBEDA Guidelines

Subcontractor/Supplier Utilization Plan

City of San Antonio Subcontractor/Supplier Letter of Intent for Contracts Utilizing Small Business Contract Goals

060 Supplemental Conditions

Performance Bond

Payment Bond

085 General Conditions for Heavy/Hwy Construction Contracts

091 HUD Supplemental Conditions

Heavy Hwy Wage Decision TX100041 MOD#0 03122010

City of San Antonio, Specifications, Special Conditions & Plans "Beacon Hill Linear Park Ph I" prepared by RVK Architects

Plans, Specifications and Special Conditions may be purchased at a cost of **$65.00** per set (tax included) from the office of **RVK-Architects, 745 East Mulberry Ave. Suite 601**, San Antonio, TX 78212 Phone (210) 733-3535. No refund will be made for plan sets that are returned. Addenda will be posted on the web at www.sanantonio.gov/rfplistings along with this solicitation. Changes to Plans, Specifications and Special Conditions will be included in an addendum and may be obtained from the office of **RVK**. Bidder understands and agrees that bidder is responsible for obtaining addenda and adhering to all requirements in addenda. City is not responsible for incorrect information obtained through other sources.

The following documents (fully completed and with original signatures) constitute the required information to be submitted as a part of the bid proposal clearly marked on the outside of the sealed envelope with the due date of bid, bidder name, Project Name and ID NO as follows:

1) 010 Invitation for Bids & Contract Signature Page for Beacon Hill Linear Park Phase I
2) 020 Bid Form
3) 025 Unit Pricing Form
4) 030 Contractor's Qualification/Information Statement
5) Bid bond or cashiers check
6) Signed Addenda Acknowledgement Forms (if applicable)
7) Subcontractors/Supplier Utilization Plan
8) City of San Antonio Subcontractor/Supplier Letter of Intent for Contracts Utilizing Small Business Contract Goals

It is understood and agreed that the work is to be completed in full on or before **180** calendar days. This project does not include hazardous environmental work. This project requires **1** project sign(s).

SBEDA Program Compliance – Affirmative Procurement Initiatives

The CITY has applied the following contract-specific Affirmative Procurement Initiative to this contract. BIDDER hereby acknowledges and agrees that the selected API requirement shall also be extended to any change order or subsequent contract modification, and absent SBO's granting of a waiver, that its full compliance with the following API terms and conditions are material to its satisfactory performance under this Agreement:

SBE Subcontracting Program: In accordance with SBEDA Ordinance Section III. D. 1. (c), this contract is being awarded pursuant to the SBE Subcontracting Program. BIDDER agrees to subcontract at least **10%** of its prime contract value to certified SBE firms. The Subcontractor / Supplier Utilization Plan that BIDDER submitted to CITY with its response for this contract (or, as appropriate, that it agrees to submit during the price proposal negotiation phase of this contract), and that contains the names of the certified SBE Subcontractors to be used by BIDDER on this contract, the respective percentages of the total prime contract dollar value to be awarded and performed by each SBE Subcontractor, and documentation including a description of each SBE Subcontractor's scope of work and confirmation of each SBE Subcontractor's commitment to perform such scope of work for an agreed upon dollar amount is hereby attached and incorporated by reference into the material terms of this Agreement. In the absence of a waiver granted by the SBO, the failure of BIDDER to attain this subcontracting goal for SBE firm participation in the performance of a Commercially Useful Function under the terms of its contract shall be a material breach and grounds for termination of the

contract with the CITY, and may result in debarment from performing future CITY contracts, withholding of payment for retainage equal to the dollar amount of the underutilization below the agreed upon SBE subcontracting goal, and/or shall be subject to any other remedies available under the terms of this Agreement for violations of the SBEDA Ordinance, or under any other law.

This is a Public Works Contract and chapter 2258 of the Texas Government Code requires that not less than the prevailing wage rate for work of a similar character in this locality shall be paid all laborers, workmen, and mechanics employed in the construction thereof. The Wage Decision Number **TX100041 03/12/2010 TX41** shall be used on this contract, which is available on the web at http://www.wdol.gov/dba.aspx#0.

The undersigned, by his/her signature, represents that he/she is authorized to bind the bidder to fully comply with Contract Documents for the amount(s) shown on the accompanying bid sheet(s). The work proposed to be done shall be accepted when fully completed and finished to the entire satisfaction of the City. The undersigned certifies all prices contained in this bid have been carefully checked and are submitted as correct and final. The Bidder by submitting this bid and signing below, acknowledges that he/she has received & read the entire Bid and Contract document and agrees to be bound by the terms therein, has received all Addenda, and agrees to the terms, conditions, and requirements of the bidder's bid proposal and all documents listed in TABLE A above and the enabling Ordinance and associated documentation that form the entire Contract upon approval by the City Council.

Official Name of Company (legal):_____

_____/_____ Signer's Name: _____

Original Signature of Person Authorized to Sign Bid/Contract Date (Please Print or Type)

CITY OF SAN ANTONIO
DEPARTMENT OF CAPITAL IMPROVEMENTS MANAGEMENT SERVICES
CONTRACT SERVICES DIVISION

RECEIPT OF ADDENDUM NUMBER **ONE** IS HEREBY ACKNOWLEDGED FOR PLANS AND

SPECIFICATIONS FOR CONSTRUCTION OF **Beacon Hill Linear Park Phase One (26-00572)**

FOR WHICH BIDS WILL BE OPENED ON **Tuesday, March 8, 2011**

THIS ACKNOWLEDGEMENT MUST BE SIGNED AND RETURNED WITH THE BID PACKAGE.

Company Name: _____

Address: _____

City/State/Zip Code: _____

Date: _____

_____
Signature

_____
Print Name/Title

inTEC

Subsurface Exploration and Foundation Analysis
Beacon Hill Linear Park Project
At 1406 Michigan Avenue
San Antonio, Texas

Capital Improvements Management Services
City of San Antonio
San Antonio, Texas

Attention: Ms. Alma Nunez,
San Antonio Parks and Recreation

BEACON HILL PARK, ADDENDUM 1, ATTACHMENT "G", 58 PGS

Integrated Testing and Engineering Company of San Antonio, L.P.

12028 Radium, San Antonio, Texas 78216—Phone: (210) 525 9033—Fax: (210) 525 9032—www.InTECtesting.com

inTEC Integrated Testing and Engineering Company of San Antonio, L.P.
Geotechnical & Environmental Engineering • Construction Services • Geologic Assessment

E.A. Palaniappan, Ph. D., P.E.
Murali Subramaniam, Ph. D., P.E.
Kaushi Subramaniam, B.S.

February 23, 2011

Capital Improvements Management Services
City of San Antonio
San Antonio, Texas

Attention: **Ms. Alma Nunez, San Antonio Parks and Recreation**

Re: Subsurface Exploration and Foundation Analysis
Beacon Hill Linear Park Project
1406 Michigan Avenue and Gramercy Play Park
San Antonio, Texas

InTEC Project No. S111604

Gentlemen:

Integrated Testing and Engineering Company (InTEC) **has completed a soil and foundation engineering report** at the above referenced project site. The results of the exploration with recommendations are presented in this report.

We **appreciate and wish to thank you for the opportunity** to be of service to you on this project. If we can be of additional assistance during the materials testing-quality control phase of construction, please call us.

Respectfully Submitted,

Very Truly Yours,
InTEC of San Antonio, L.P.

STATE OF TEXAS
MURALIK SUBRAMANIAM
102417
LICENSED
PROFESSIONAL ENGINEER

InTEC of SAN ANTONIO
F-7623

Murali Subramaniam, Ph.D., P.E.

E.A. "Paul" Palaniappan, Ph.D., P.E.
CHIEF ENGINEER

Copies Submitted: Above (1)

12028 Radium • San Antonio, Texas 78216 • Office (210) 525-9033 • Fax (210) 525-9032 • www.InTECtesting.com

Austin (512) 252-1218 fax (512) 252-1219
Denver (303) 463-9317 fax (303) 463-9321
DFW Metro (817) 858-0870 fax (817) 858-0036
Houston (281) 371-3330 fax (281) 371-3334
Louisiana (985) 878-8690 fax (985) 878-8692

EXECUTIVE SUMMARY

The soil conditions at the location of the **proposed new structures at Beacon Hill Linear Park at 1406 Michigan Avenue and Gramercy Play Park in San Antonio, Texas** were explored by drilling **4 borings to depths of 30 feet.** Laboratory tests were performed on selected specimens to evaluate the engineering characteristics of various soil strata encountered in our borings.

The results of our exploration, laboratory testing and engineering evaluation indicate the shallow clays underlying the site are **highly expansive in character.** Potential vertical movements or settlements on the order of **4 ½ to 5 ½ inches** were estimated at the Boring locations.

The proposed shade structure may be supported by Straight shaft piers. Straight shaft piers founded at a depth of **24-ft below existing grade** may be considered to support the proposed building. Piers founded at a depth of **24-ft** may be sized for an allowable end bearing capacity value of **11,750 lbs per sq foot.** In addition, an allowable skin friction value of **875 lbs per sq ft** may be used for the pier shaft embedded below the depth of **15-ft.**

The other structures may be supported by straight shaft piers or stiffened grid type beam and slab or post-tensioned beam and slab foundations. Grade beams of the stiffened grid type beam and slab foundation or post-tensioned beam and slab foundation founded at a minimum depth of 24 inches below the finish grade elevation may be sized for an allowable bearing capacity of 1600 lbs per sq-ft. A design plasticity index value of 60 is recommended for the proposed new structures.

Ground water seepage was not encountered in our borings at the time of our drilling. Moist samples were encountered at approximate depths of 8 and 9-ft in our borings B-2 and B-4.

Detailed descriptions of subsurface conditions, engineering analysis, and design recommendations are included in this report.

INTRODUCTION

General

This report presents the results of our subsurface exploration and foundation analysis for the proposed **new structures at Beacon Hill Linear Park at 1406 Michigan Avenue and Gramercy Play Park in San Antonio, Texas.** This project was authorized by **Ms. Alma Nunez.**

Project Description

Based on the information provided to InTEC, it is our understanding that the proposed project consists of shade structures, light poles, a new basketball court (5,000 sq ft), playground structures, and pavement repairs at the above referenced locations. Part of the project area is underlain by a large concrete drainage channel. Approximately, 2-ft of soil is installed on top of this concrete channel and some of the playground structures are planned to be installed on top of the existing concrete drainage structure. All the borings were done outside this drainage structure and the recommendations presented in this report are based on structures on natural soils only. The structures are expected to create maximum column loads on the order of 50 to 100 kips

Purpose and Scope of Services

The purpose of our geotechnical investigation was to evaluate the site's subsurface and ground water conditions and provide geotechnical engineering recommendations for the design and construction of the proposed structures. Our scope of services includes the following:

1) Drilling and sampling of **4 borings** - to depths of **30 -ft** in the proposed areas of the structures;

2) **evaluation of the in-place conditions of the subsurface soils** through field penetration tests;

3) **observation of the ground water conditions** during drilling operations;

4) performing laboratory tests such as **Atterberg Limits and Moisture Content tests**;

5) **review and evaluation of the field and laboratory test programs** during their execution with modifications of these programs, when necessary, to adjust to subsurface conditions revealed by them;

6) **compilation, generalization and analysis of the field and laboratory data** in relation to the project requirements;

7) **estimation of potential vertical movements**;

8) **development of recommendations for the design, construction, and earthwork phases of the project**;

9) **consultations with Prime Professional and members of the design team** on findings and recommendations; and preparation of a written geotechnical engineering report for use by the members of the design team in their preparation of design, contract documents, and specifications.

The **Scope of Services did not include any environmental assessment** for the presence or absence of wetlands or hazardous or toxic materials in the soil, surface water, groundwater, or air, on or below or around this site. Any statements in this report or on the boring logs regarding odors, colors or unusual or suspicious items or conditions are strictly for the information of the client.

SUBSURFACE EXPLORATION

Scope

The field exploration to determine the engineering characteristics of the subsurface materials included a reconnaissance of the project site, drilling the borings and recovering disturbed Split spoon and Shelby Tube samples.

Four soil test borings were drilled at the approximate locations shown on the Boring Location Plan, Plate 1 included in the Illustration Section of this report. These borings were drilled to depths of **30-ft below the presently existing ground surface**. All the boring locations were not drillable at this time due to existing drain structure and utilities. Boring locations were selected by the project Geotechnical Engineer and established in the field by the drilling crew using normal taping procedures.

Drilling and Sampling Procedures

The soil borings were performed with a drilling rig equipped with a rotary head. Conventional solid stem augers were used to advance the holes and samples of the subsurface materials were obtained using a **2-inch O.D. Split Spoon Sampler and Shelby Tube Sampler.** The samples were identified according to boring number and depth, encased in polyethylene plastic wrapping to protect against moisture loss, and transported to our laboratory in special containers. In summary, the samples presented in Table No. 1 were collected as a part of our field exploration procedure:

Table No. 1

Type of Sample	Number Collected
Split-Spoon Samples	24
Shelby Tube Sample	8

Field Tests and Measurements

Penetration Tests - During the sampling procedures, **standard penetration tests were performed** in the borings in conjunction with the split-barrel sampling. The standard penetration value (N) is defined as the number of blows of a 140-pound hammer, falling thirty inches, required to advance the split-spoon sampler one foot into the soil. The sampler is lowered to the bottom of the drill hole and the number of blows recorded for each of the three successive increments of six inches penetration. The "N" value is obtained by adding the second and third incremental numbers. The results of the standard penetration test indicate the relative density and comparative consistency of the soils, and thereby provide a basis for estimating the relative strength and compressibility of the soil profile components.

Water Level Measurements - **Ground water seepage was not observed in our borings at the time of drilling.** In relatively pervious soils, such as sandy soils, the indicated elevations are considered reliable ground water levels. In relatively impervious soils, the accurate determination of the ground water elevation may not be possible even after several days of observation. Seasonal variations, temperature and recent rainfall conditions may influence the levels of the ground water table and volumes of water will depend on the permeability of the soils.

Field Logs

A field log was prepared for each boring. Each log contained information concerning the boring method, samples attempted and recovered, indications of the presence of various materials such as silt, clay, gravel or sand and observations of ground water. It also contained an interpretation of subsurface conditions between samples. **Therefore, these logs included both factual and interpretive information.**

Presentation of the Data

The final logs represent our interpretation of the contents of the field logs for the purpose delineated by our client. The final logs are included on **Plates 2 thru 5** included in the Illustration Section. A key to classification terms and symbols used on the logs is presented on **Plate 6.**

LABORATORY TESTING PROGRAM

Purpose

In addition to the exploration, a supplemental laboratory testing program was implemented to determine **additional pertinent engineering characteristics of the subsurface materials necessary in evaluating the design parameters.**

Laboratory Tests

All phases of the laboratory testing program were performed in general accordance with the indicated applicable ASTM Specifications as indicated in Table No. 2.

Table No. 2

Laboratory Test	Applicable Test Standard
Liquid Limit, Plastic Limit, and Plasticity Index of the Soils	ASTM D 4318
Moisture Content	ASTM D 2216

In the laboratory, each sample **was observed and classified by a geotechnical engineer.** As a part of the classification procedure, the natural water contents of selected specimens were determined. Liquid and plastic limit tests were performed on representative specimens to determine the plasticity characteristics of the different soil strata encountered.

Presentation of the Data

In summary, the tests as presented in Table No. 3 were performed in the laboratory to evaluate the engineering characteristics of the subsurface materials:

Table No. 3

Type of Test	Number Conducted
Natural Moisture Content	**32**
Atterberg Limits	**10**

The results of all these tests are presented on appropriate boring logs. These laboratory test results were used to classify the soils encountered according to the Unified Soil Classification System (ASTM D 2487).

GENERAL SUBSURFACE CONDITIONS

Soil Stratigraphy

The soils underlying the site may be grouped into **one generalized stratum** with similar physical and engineering properties. The lines designating the interface between soil strata on the logs represent approximate boundaries. Transition between materials may be gradual. The soil stratigraphy information at the boring locations is presented in the boring logs, **Plates 2 thru 5.** The soil conditions in between our borings may vary across the site. We should be called upon at the time of construction to verify the soil conditions between our borings.

The engineering characteristics of the underlying soils, based on the results of the laboratory tests performed on selected samples, are summarized and presented in Table No. 4.

Table No. 4

Stratum No. and Description	Depth Range in feet	Liquid Limit Range	Plasticity Index Range	Blow Counts, Range
Fill: Brown Clay	0 – 0.5	76	54	-
Stratum I Dark Brown Clay	0 – 4.5	74 – 75	54 – 55	-
Stratum II Tan Clay to Tan and Gray Clay	2.5 – 30	56 – 81	41 – 61	19 – 49

The above description is of a generalized nature to highlight the major soil stratification features and soil characteristics. The test boring logs should be consulted for specific information at each boring location.

Soil Stratigraphy may vary between boring locations. **If deviations from the noted subsurface conditions are encountered during construction, they should be brought to the**

attention of InTEC. We may revise the recommendations after evaluating the significance of the changed conditions.

Ground Water Observations

Ground water seepage was not encountered in our borings during drilling. The low permeability of the soils would require several days or longer for ground water to stabilize in the boreholes. Ground water levels will fluctuate with seasonal climatic variations and changes in the land use. Moist samples were observed at approximate depths of 8 and 9 feet in our borings B-2 and B-4 at the time of drilling.

It is not unusual to encounter shallow ground water during or after periods of rainfall. The surface water tends to percolate down through the surface soils until it encounters a relatively impervious layer.

FOUNDATIONS ON EXPANSIVE SOIL

General

There are many plastic clays that swell considerably when water is added to them and then shrink with the loss of water. Foundations constructed on these clays are subjected to large uplifting forces caused by the swelling.

In the characterization of a building site**, two major factors that contribute to potential shrink-swell problems must be considered.** Problems can arise if a) the soil has expansive or shrinkage properties and b) the environmental conditions that cause moisture changes to occur in the soil.

Evaluation Of The Shrink-Swell Potential Of The Soils

Subsurface sampling, laboratory testing and data analysis are used in the evaluation of the shrink-swell potential of the soils under the foundations.

The Mechanism Of Swelling

The mechanism of swelling in expansive clays is complex and is influenced by a number of factors. Basically, expansion is a result of changes in the soil-water system that disturb the internal stress equilibrium. Clay particles in general have negative electrical charges on their surfaces and positively charged ends. The negative charges are balanced by actions in the soil water and give rise to an electrical interparticle force field. In addition, adsorptive forces exist between the clay crystals and water molecules, and Van Der Waals surface forces exist between particles. Thus, there exists an internal electro-chemical force system that must be in equilibrium with the externally applied stresses and capillary tension in the soil water. If the soil water chemistry is changed either by changing the amount of water or the chemical composition, the interparticle force field will change. If the change in internal forces is not balanced by a corresponding change in the state of stress, the particle spacing will change so as to adjust the interparticle forces until equilibrium is reached. This change in particle spacing manifests itself as a shrinkage or swelling.

Initial Moisture Condition And Moisture Variation

Volume change in an expansive soil mass is the result of increases or decreases in water content. The initial moisture content influences the swell and shrink potential relative to possible limits, or ranges, in moisture content. Moisture content alone is useless as an indicator or

predictor of shrink-swell potential. The relationship of moisture content to limiting moisture contents such as the plastic limit and liquid limit must be known.

If the moisture content is below or near plastic limit, the soils have high potential to swell. It has been reported that expansive soils with liquidity index* in the range of 0.20 to 0.40 will tend to experience little additional swell.

The availability of water to an expansive soil profile is influenced by many environmental and man made factors. Generally, the upper few feet of the profile are subjected to the widest ranges of moisture variation, and is least restrained against movement by overburden. This upper stratum of the profile is referred to as the active zone. Moisture variation in the active zone of a natural soil profile is affected by climatic cycles at the surface, and fluctuating groundwater levels at the lower moisture boundary.

The surficial boundary moisture conditions are changed significantly simply by placing a barrier such as a building floor slab or pavement between the soil and atmospheric environment. Other obvious and direct causes of moisture variation result from altered drainage conditions or man-made sources of water, such as irrigation or leaky plumbing. The latter factors are difficult to quantify and incorporate into the analysis, but should be controlled to the extent possible for each situation. For example, proper drainage and attention to landscaping are simple means of minimizing moisture fluctuations near structures, and should always be taken into consideration.

Man Made Conditions That Can Be Altered

There are a number of factors that can influence whether a soil might shrink or swell and the

* $\text{LIQUIDITY INDEX} = \frac{\text{NATURAL WATER CONTENT - PLASTIC LIMIT}}{\text{LIQUID LIMIT - PLASTIC LIMIT}}$

magnitude of this movement. **For the most part, either the owner or the designer has some control over whether the factor will be avoided altogether or if not avoided, the degree to which the factor will be allowed to influence the shrink-swell process.**

Antecedent Rainfall Ratio **This is a measure of the local climate and is defined as the total monthly rainfall for the month of and the month prior to laying the slab divided by twice the average monthly rate measured for the period.** The intent of this ratio is to give a relative measure of ground moisture conditions at the time the slab is placed. Thus, if a slab is placed at the end of a wet period, the slab should be expected to experience some loss of support around the perimeter as the wet soil begins to dry out and shrink. The opposite effect could be anticipated if the slab is placed at the end of an extended dry period; as the wet season occurs, uplift around the perimeter may occur as the soil at the edge of the slab gains in moisture content.

Age of Slab **The length of time since the slab was cast provides an indication of the type of swelling of the soil profile that can be expected to be found beneath the slab.**

Lot Drainage **This provides a measure of the slope of the ground surface with respect to available free surface water that may accumulate around the slab.** Most builders are aware of the importance of sloping the final grade of the soil away from the structure so that rain water is not allowed to collect and pond against or adjacent to the foundations. If water were allowed to accumulate next to the foundation, it would provide an available source of free water to the expansive soil underlying the foundation. Similarly, surface water drainage patterns or swales must not be altered so that runoff is allowed to collect next to the foundation.

Topography **This provides a measure of the downhill movement that is associated with light foundations built on slopes in expansive soil areas.** The designer should be aware that as the soil swells, it heaves perpendicularly to the ground surface or slope, but when it shrinks, it

recedes in the direction of gravity and gradually moves downslope in a sawtooth fashion over a number of shrink-swell cycles. In addition to the shrink-swell influence, the soil will exhibit viscoelastic properties and creep downhill under the steady influence of the weight of the soil. Therefore, if the building constructed on this slope is not to move downhill with the soil, it must be designed to compensate for this lateral soil influence.

Pre-Construction Vegetation **Large amount of vegetation existing on a site before construction may have desiccated the site to some degree, especially where large trees grew before clearing**. Constructing over a desiccated soil can produce some dramatic instances of heave and associated structural distress and damage as it wets up.

Post-Construction Vegetation **The type, amount, and location of vegetation that has been allowed to grow since construction can cause localized desiccation. Planting trees or large shrubs near a building can result in loss of foundation support as the tree or shrub removes water from the soil and dries it out.** Conversely, the opposite effect can occur if flowerbeds or shrubs are planted next to the foundation and these beds are kept well watered or flooded. This practice can result in swelling of the soil around the perimeter where the soil is kept wet.

Summation

It is beyond the scope of this investigation to do more than point out that the above factors have a definite influence on the amount and type of swell to which a slab-on-ground is subjected during its useful life. **The design engineer must be aware of these factors as he develops his design and make adjustments as necessary according to the results of special measurements or from his engineering experience and judgment.**

DESIGN ENGINEERING ANALYSIS

Foundation Design Considerations

Review of the borings and test data indicates that the following factors will affect the foundation design and construction at this site:

1) The site is underlain by subsoils of high plasticity. Structures supported on or within the limestone will be subjected to **potential vertical movements or settlements on the order of 4 ½ to 5 ½ inches.**
2) The strengths of the underlying soils are adequate to support shallow or deep foundations.
3) Ground water seepage was not encountered in our borings at the time of the subsurface exploration phase.

Vertical Movements

The potential vertical rise (PVR) for slab-on grade construction at the location of the structure had been estimated using Texas Department of Transportation Procedure TXDOT-124-E. This method utilizes the liquid limits, plasticity indices, and in-situ moisture contents for soils in the seasonally active zone, estimated to be about twelve feet at the project site.

The estimated PVR value provided is based on the proposed floor system applying a sustained surcharge load of approximately 1.0 lb. per square inch on the subgrade materials. **Potential vertical movement on the order of 4 ½ to 5 ½ inches was estimated at the finish grade elevation.**

If proper drainage is not maintained, resulting potential vertical movements will be much greater than 2 or 3 times the anticipated vertical movements.

If the existing grade is lower than the finish grade elevation, compacted crushed limestone select fill should be used to raise the grade. The select fill should be placed and compacted as recommended in Select Fill, Construction Guidelines section in this report. Each lift should be tested to verify compaction compliance and approved by InTEC before placement and compaction of the subsequent lifts.

Method to Reduce Vertical Movements

The following option may be considered to lower potential vertical movements at the building locations. If additional options are required, please contact InTEC.

a) Removal and Replacement

The underlying clays may be removed to a depth of 0 to 7-ft and replaced by compacted crushed limestone select fill as stated in Table No. 5. The depth options and the respective anticipated movements after selection of one of the depth options are presented in Table No. 5.

Table No. 5

Once the finished floor elevation information is available, Please contact InTEC. The removal and replacement depth may be revised.

Excavation depth of existing clay (feet)	Thickness of Select Fill (feet) *	Anticipated Potential Vertical Movements (inches)
0	0	5 ½
3	4	3 ½
5	6	2 ½
7	8	1

* finish floor elevation is assumed to be 1-ft above existing grade

The select fill should be placed and compacted as recommended under select fill, Construction Guidelines Section of this report. Each lift should be tested and approved by InTEC before placement of the subsequent lift.

If over excavation and select fill replacement is used to reduce potential vertical movements, the bottom of excavation should be drained properly. It should not act as a bathtub and hold water in the event any accidental source of water enters the excavation. Gravel fill and perforated drainpipes with perforations at the bottom, outlet pipes with a gradient, and day-lighting the pipes with head walls should be considered for proper drainage.

When the clay removal and select fill replacement method is used to reduce potential vertical movements, the select fill extending 3 to 5-ft outside the building should be covered by 2-ft thick compacted impervious clay. The impervious clay (with plasticity index value 35 or greater) should be placed in 8 inch loose lifts and compacted to a minimum of 95 percent of the maximum ASTM D 698 dry density at a water content between Optimum and Optimum Plus two percentage points. The top surface of clay seal should be sloped away from the building perimeter.

Coping with problems of shrink/swell due to expansive clays is a "fact of life" in the Texas region of south western U.S.A. Support of the building on deep underreamed footings with a structurally suspended floor slab (12 inch void) will provide a foundation system with the least risk for distress due to shrink/swell of the clays. It should be noted that expansive clay does not shrink/swell without changes in moisture content, and thus good site design is very important to minimize foundation movements.

It is our experience that support of the walls and columns on stiffened grid type beam and slab foundation or post tensioned beam and slab foundation will provide reasonable performance of the foundation if the clay subsoils are wet at the time of earthwork construction. However, some

shrink/swell will probably occur causing some cracks in the floor slab and interior walls due to the foundation system because the subsoil conditions between borings are unknown, the moisture content of the clays and groundwater conditions at the time of construction are unknown, and construction practices can be adversely effect the supporting properties of the subsoils.

FOUNDATION RECOMMENDATIONS

General

The following recommendations presented are based on the data obtained from our field and laboratory tests, our past experience with geotechnical conditions similar to those at this site, and our engineering design analysis.

Surface drainage is very important around the building and in the pavement areas. The surface water should be drained as fast as possible around the residences and roadways. If enough slopes are not available for a good surface drainage, gratings and pipes may be used to carry the water and drain the area fast. In some areas, a) where surface water gets into the subsurface and b) water travels laterally within the underlying gravel layers should be collected by French Drains and disposed off in the drain areas.

At the time of construction, utility and grade beam excavations may reveal that the soil stratigraphy encountered is different in between our borings. If this happens, we should be informed. We may revise the foundation recommendations accordingly.

Foundation Selection

The type and depth of foundation suitable for a given structure primarily depends on several factors: **the subsurface conditions, the function of the structure, the loads it may carry and**

the cost of the foundation. Additional considerations may include acceptable performance criteria set by the owner, architect, or structural designer with respect to vertical and differential movements which the structure can withstand without damage.

Based on the above mentioned conditions, engineering design analysis considered drilled piers for the buildings and stiffened grid type beam and slab and post-tensioned beam and slab foundations to support appurtenant structures. If additional design options are required, please contact InTEC.

Straight Shaft Piers

Straight shaft piers may be used to support the proposed structures such as the shade structure. Piers founded at a depth of 24-ft below existing grade may be considered to support the proposed structure. An allowable end bearing capacity value of 11,750 lbs per sq ft is recommended. In addition, an allowable skin fraction value of 875 lbs per sq ft is recommended for that portion of the pier which is embedded below a depth of 15-ft below the finished grade elevation of the pier.

Uplift Forces

Moisture variation in the expansive soils at this site can cause vertical movements of the subsurface soils. This potential vertical movement can mobilize uplift force along the shaft of a drilled pier. The uplift force acting on the shaft may be estimated by using the Equation No. 1.

Fu = 49d - - - - - - (1)
Fu = uplift force in kips
D = Diameter of the shaft in feet

Tension steel will be required in each pier shaft to withstand a net force equal to the uplift force minus the sustained compressive load carried by that footing. We recommend that each pier be reinforced with tension steel to withstand this net force or one percent of the cross-sectional area that shaft, whichever is maximum.

Pier Spacing A minimum clear spacing between any two piers should not be less than **3d where d is the shaft diameter.** If underreamed piers are used, the clear spacing between two underreams should be at least D where D is the underream diameter of the larger underream diameter pier. If the spacing between the piers is closer than 3d or spacing between two underreams is lower than D, stress concentrations will occur between the two piers. The concentrated stress may be higher than the allowable bearing capacity. Hence, these piers should be designed for a lower bearing capacity than the maximum allowable. For construction purposes, the minimum pier spacing may be as close as 3 feet provided the first pier has been drilled, concreted and the concrete had achieved its final set before the adjacent pier is drilled.

Grade Beams A minimum 8 inch void space should be constructed beneath the grade beams in the limestone areas to prevent uplift if the underlying clay expands. Cardboard carton forms may be used for this purpose.

Floor Slabs

Two alternatives are available for constructing floor slabs in conjunction with a drilled pier foundation. The owner may select the alternative best satisfying the required performance criteria.

Alternative No. 1: Floor slabs, or portions of the floor slab, which have high performance criteria and are movement sensitive in nature, should be structurally suspended above grade because of the anticipated ground movements. A positive void space of at least 8 inches, preferably more, should be provided beneath the floor slab.

The crawl space should be drained properly with a positive drainage so that water will not accumulate in the crawl space. Excavated on-site material may be used to raise the grade in the crawl space area. However, it should be compacted to 95 percent of the ASTM D 698 maximum density and tested. Select fill need not be used to raise the grade in the crawl space area.

Alternative No. 2: Floor Slabs within the superstructure may be ground supported provided (a) the potential vertical movements as presented on pages 13 thru 16 in the previous section will not impair the performance of the floor system and (b) the recommendations in the Construction Guidelines Section are followed.

Soil supported floor slabs could be doweled to the perimeter grade beams. Doweled slabs that are subjected to heaving will typically crack and develop a plastic hinge along a line which will be approximately 5 to 10 feet inside and parallel to the grade beams.

The floor slab may be cast independent of the grade beams, interior columns and partitions. These slabs should experience cracking of lower magnitude, but may create difficulties at critical entry points such as doors. A "trip hazard" could result due to resulting differential movements at entryways and difficulty in opening and closing doors could develop.

We recommend placement of a polyethylene moisture barrier under soil supported floor slab to reduce the possibility of moisture migration through the slab.

Stiffened Grid Type Beam and Slab Foundation

Stiffened grid type beam and slab foundation may be considered to support the structures at this project site provided (a) a minimum of 3-ft of existing clays are removed and replaced by 4-ft thick compacted crushed limestone select fill, (b) all the recommendations presented in the Construction Guidelines section are followed, and (c) the anticipated vertical movements presented under "Vertical Movements" on Pages 13 thru 16 will not impair the performance of the proposed structures.

It is desirable to design the foundation system utilizing the simplifying assumption that the loads are carried by the beams; an allowable bearing capacity of 1800 lbs per sq ft is recommended for beams founded within the compacted crushed limestone select fill at a minimum depth of 24 inches below finish grade. The beams should be a minimum of 12 inches wide to prevent local shear failure. A design plasticity index value of 55 is recommended for the stated removal and replacement (3-ft of existing clay removal and replaced with 4-ft thick compacted crushed limestone select fill). A Climatic Rating (Cw) value of 17, a Support Index (C) value of 0.62, and Unconfined Compressive Strength value of 0.9 tsf are recommended.

Post-Tensioned Beam and Slab Foundation

Post-tensioned slab-on-grade foundation may be considered to support the proposed structures at this project site (a) a minimum of 3-ft of existing clays are removed and replaced by 4-ft thick compacted crushed limestone select fill, (b) all the recommendations presented in the Construction Guidelines section are followed, and (c) the anticipated vertical movements presented under "Vertical Movements" on Pages 13 thru 16 will not impair the performance of the proposed

structures. Pertinent design parameters were evaluated and are presented in the following paragraphs.

PTI 3rd Edition: Differential vertical movements should be expected for shallow type foundations at this site **due to expansive soil conditions which were encountered.** Differential vertical movements have been estimated for both the center lift and edge lift conditions for post-tensioned slab-on grade construction at this site. These movements were estimated using the procedures and criteria discussed in the Post-Tensioning Institute Manual entitled **"Design of Post Tensioned Slabs-on-Ground-Third Edition Manual.** We recommend that the structural engineer consider the limitations and assumptions of the method by establishing minimum PTI design parameters for foundation system design to account for the relatively low Ym values produced when analyzing certain soil conditions.

The estimated PTI differential movements (Ym) are provided in Tables No. 6, 7, and 8.

Table No. 6 (PTI 3rd Edition) – Design Plasticity Index Value of 55

Underlying clays removed to a depth of 3-ft and
replaced by 4-ft thick compacted crushed limestone select fill

Center Lift (Ym values)	**Inches**
Wet to dry soil moisture condition	2.14
Wet to dry and 30* inch vertical moisture barrier applied to initial moisture profile	1.92
Wet to dry and 36** inch vertical moisture barrier applied to initial moisture profile	1.75
Wet to dry and 42*** inch vertical moisture barrier applied to initial moisture profile	1.58
Edge Lift (Ym values)	
Dry to wet soil moisture condition	3.31
Dry to wet and 30* inch vertical moisture barrier applied to initial moisture profile	2.97
Dry to wet and 36** inch vertical moisture barrier applied to initial moisture profile	2.76
Dry to wet and 42*** inch vertical moisture barrier applied to initial moisture profile	2.51

Em – Center Lift = 8.5-ft
Em – Edge Lift = 4.6-ft

* minimum 30 inch external vertical moisture barrier

** minimum 36 inch external vertical moisture barrier

*** minimum 42 inch external vertical moisture barrier

Table No. 7 (PTI 3rd Edition) – Design Plasticity Index Value of 52

Underlying clays removed to a depth of 5-ft and
replaced by 6-ft thick compacted crushed limestone select fill

Center Lift (Ym values)	Inches
Wet to dry soil moisture condition	1.52
Wet to dry and 30* inch vertical moisture barrier applied to initial moisture profile	1.35
Wet to dry and 36** inch vertical moisture barrier applied to initial moisture profile	1.18
Wet to dry and 42*** inch vertical moisture barrier applied to initial moisture profile	1.02
Edge Lift (Ym values)	
Dry to wet soil moisture condition	2.41
Dry to wet and 30* inch vertical moisture barrier applied to initial moisture profile	2.10
Dry to wet and 36** inch vertical moisture barrier applied to initial moisture profile	1.91
Dry to wet and 42*** inch vertical moisture barrier applied to initial moisture profile	1.73

Em – Center Lift = 8.5-ft
Em – Edge Lift = 4.5-ft

* minimum 30 inch external vertical moisture barrier

** minimum 36 inch external vertical moisture barrier

*** minimum 42 inch external vertical moisture barrier

Table No. 8 (PTI 3rd Edition) – Design Plasticity Index Value of 47

Underlying clays removed to a depth of 7-ft and
replaced by 8-ft thick compacted crushed limestone select fill

Center Lift (Ym values)	**Inches**
Wet to dry soil moisture condition	0.85
Wet to dry and 30* inch vertical moisture barrier applied to initial moisture profile	0.71
Wet to dry and 36** inch vertical moisture barrier applied to initial moisture profile	0.59
Edge Lift (Ym values)	
Dry to wet soil moisture condition	1.45
Dry to wet and 30* inch vertical moisture barrier applied to initial moisture profile	1.27
Dry to wet and 36** inch vertical moisture barrier applied to initial moisture profile	1.12

Em – Center Lift = 8.5-ft
Em – Edge Lift = 4.5-ft

* minimum 30 inch external vertical moisture barrier

** minimum 36 inch external vertical moisture barrier

*** minimum 42 inch external vertical moisture barrier

If proper drainage is not maintained, resulting potential vertical movements will be much greater than 2 or 3 times the anticipated vertical movements. The differential vertical movements experienced may be as much as the anticipated total vertical movements.

The Post-Tensioning Institute (PTI) method incorporates numerous design assumptions associated with the derivation of required variables needed to determine the soil design criteria. **The PTI method of predicting differential soil movement is applicable only when site moisture conditions are controlled by the climate alone** (i.e. not improper drainage or water

leaks). **The performance of a slab and movement magnitudes can be significantly influenced by yard maintenance, water line leaks, and trees present before and after construction.**

Utilities

Utilities which project through slab-on-grade floors should be designed with either some degree of flexibility or with sleeves in order to prevent damage to these lines should vertical movements occur.

Utility excavations may encounter ground water. The ground water can be handled by sump and pump method of dewatering systems.

Deep excavations may encounter ground water which may flow through the gravel fill surrounding the pipeline; this water may be near the ground surface at lower points in the subdivision. The gravel should be extended to a nearby creek or drainage feature and pressure head should be relieved by day lighting at the ground surface.

Contraction, Control or Expansion Joints

Contraction, control or expansion joints should be designed and placed in various portions of the structure. Properly planned placement of these joints will assist in controlling the degree and location of material cracking which normally occurs due to soil movements, material shrinkage, thermal affects, and other related structural conditions.

Lateral Earth Pressure

Some of the grade beams may act as retaining structures in addition to transferring vertical loads. Some cantilever retaining walls may be needed at this site. The equivalent fluid

density values were evaluated for various backfll materials. These values are presented in Table No. 9.

Table No. 9

Backfill Material	Equivalent Fluid Density PCF Active Condition	At Rest condition
a. Crushed Limestone	40	55
b. Clean Sand	45	60
c. On-site clays	75	95

These equivalent fluid densities do not include the effect of seepage pressures, surcharge loads such as construction equipment, vehicular loads or future storage near the walls.

If the basement wall or cantilever retaining wall can tilt forward to generate "active earth pressure" condition, the values under active condition should be used. For rigid non-yielding walls which are part of the building, the values "at rest condition" should be used.

The compactive effort should be controlled during backfill operations. Over-compaction can produce lateral earth pressures in excess of at-rest magnitudes. Compaction levels adjacent to below-grade walls should be maintained between 95 and 98 percent of standard Proctor (ASTM D 698) maximum dry density.

The backfill behind the wall should be drained properly. The simplest drainage system consists of a drain located near the bottom of the wall. The drain collects the water that enters the backfill and this may be disposed of through outlets in the wall called "weep holes". To insure that the drains are not clogged by fine particles, they should be surrounded by a granular filter. In spite of a well constructed toe drain, substantial water pressure may develop behind the wall if the backfill consists of clays or silts. A more satisfactory drainage system, consisting of a back drain of 12 inches to 24 inches width gravel may be provided behind the wall to facilitate drainage.

The maximum toe pressure for footings founded two feet below finish grade elevation should not exceed 2100 pounds per square feet. An adhesion value of 600 pounds per square foot may be used under the wall footings to check against sliding. This adhesion value is applicable for retaining wall bases supported on the existing clay soils.

Some retaining wall bases may be supported on or within compacted select fill material. For these wall bases, a coefficient of sliding friction value of 0.4 is recommended. If passive pressure is required at any location, we should be informed. We can provide the passive pressure for that particular condition after considering the rigidity and soil-structure interaction characteristics of that structure.

Seismic Design Criteria

The following seismic design criteria are presented based on the International Building code 2006 (IBC 2006) Section 1613 - Earthquake Loads. These criteria include the seismic site class and the spectral acceleration values and presented in Table No. 10.

Table No. 10

Site Class Site class definition was determined based on Standard Penetration Test values – Table 1613.5.2 IBC 2006	D
Maximum considered earthquake 0.2 sec spectral response acceleration for site class B - Figure 1613.5(1) IBC 2006	$S_s = 0.14g$
Maximum considered earthquake 1.0 sec spectral response acceleration for site class B – Figure 1613.5(2) IBC 2006	$S_1 = 0.04g$

PAVEMENT GUIDELINES

General

Pavement areas for the Beacon Hill Linear Park at 1406 Michigan Avenue and Gramercy Play Park in San Antonio are expected to include parking areas and driveways. The following recommendations are presented as a guideline for pavement design and construction. These recommendations are based on a) our previous experience with subgrade soils like those encountered at this site, b) pavement sections which have proved to be successful under similar design conditions, c) final pavement grades will provide adequate drainage for the pavement areas and that water will not be allowed to enter the pavement system by either edge penetration adjacent to landscape areas or penetration from the surface due to surface ponding, or inadequate maintenance of pavement joints, or surface cracks that may develop, and d) design criteria presented in the previous paragraph.

It is beyond the scope of this investigation to do more than point out the factors that have a definite influence on the amount and type of swell to which a pavement is subjected during its useful life. The design engineer must be aware of these factors as he develops his design and make adjustments as necessary according to the results of special measurements or from his engineering experience and judgment.

Pavement designs provide an adequate thickness of structural sections over a particular subgrade (in order to reduce the wheel load to a distributed level so that the subgrade can support load). The support characteristics of the subgrade is based on strength characteristics of the subgrade soils **and not on the shrinkage and swelling characteristics of the clays.** Therefore, the pavement sections may be adequate from a structural stand point, may still experience cracking and deformation due to shrinkage and swelling characteristics of the soils. In addition,

if the proposed new pavement areas are used to carry temporary construction traffic, then heavier street sections may be needed. Please contact InTEC to discuss options.

It is very important to minimize moisture changes in the subgrade to lower the shrinkage and swell movements of the subgrade clays. The pavement and adjacent areas should be well drained. Proper maintenance should be performed by sealing the cracks as soon as they develop to prevent further water penetrations and damage.

Periodic Maintenance

The pavements constructed on clay subgrades such as the one encountered at this site will be subjected to swell related movements. Hence, **periodic maintenance such as crack sealing and surface finishing are anticipated.**

Pavement Sections

Parking areas and drives may be designed with either a flexible or rigid pavement. Pavement sections for both rigid and flexible types are recommended as follows for heavy truck traffic areas and parking areas:

Table No. 11

	Thickness in Inches	
Rigid Pavement Section	**Parking Areas**	**Drive Areas**
Reinforced Concrete	5	6
* Subgrade	6	6

Table No. 12

Flexible Pavement Section	Thickness in Inches Parking Areas	Drive Areas
Hot Mix Asphaltic Concrete	2	2 ½
Aggregate Base	10	12
* Subgrade	6	6

*** The subgrade should be stabilized using lime or cement**. Please contact InTEC for lime or cement content.

If heavy truck traffic is anticipated, please contact for pavement recommendations.

Subgrade Preparation

It is important that any existing organic and compressible soils (the upper soils which contain organic materials such as leaves, roots, etc.) be removed and the exposed subgrade be properly prepared prior to pavement installation. The subgrade should be proof rolled to 95 percent of the maximum dry density as determined by procedures outlined by TXDOT-114-E compaction test at moisture content between -1 to +3 percent of optimum moisture content. Base course material should be placed immediately upon completion of the subgrade compaction operation to prevent drying of the soils due to exposure.

Base Course Based on the surveys of available materials in the area, a base course of crushed limestone aggregate or gravel appears to be the most practical material for asphalt pavement

project. The base course should conform to Texas State Department of Highways and Public Transportation Standard Specifications, Item 247, Type A, Grade 1.

The grain size requirements of the base materials are presented in Table No. 13.

Table No. 13

Sieve Size	Percent Retained
1¾"	0
7/8"	10-35
3/8"	30-50
No. 4	45-65
No. 40	70-85

The maximum liquid limit - 35.1 The maximum plasticity index - 10.1

The base course should be brought to near optimum moisture conditions and compacted in two lifts to at least 95 percent of maximum dry density as determined by test method ASTM D 1557.

Asphaltic Concrete

The Asphaltic concrete surface course should conform to Texas State Department of Highways and Public Transportation Standard Specifications, Item 340, Type D. The Asphaltic concrete should be designed for a stability of at least 40. The Asphaltic concrete should be compacted to between 92 and 97 percent of the theoretical density as determined by ASTM D 2041.

Reinforced Concrete

Concrete should be designed to exhibit a flexural strength (3 point loading) of at least 450 psi at 28 days. As an option, a 28 day compressive strength requirement of 3500 psi may be utilized.

Concrete Pavement

Concrete pavement slabs should be provided with adequate steel reinforcement. Proper finishing of concrete pavements requires the use of sawed and sealed joints which should be designed in accordance with current Portland Cement Association guidelines. Dowel bars should be used to transfer loads at transverse joints. Related civil design factors such as drainage, cross-sectional configurations, surface elevations and environmental factors which will significantly affect the service life must be included in the preparation of the construction drawings and specifications. Normal periodic maintenance will be required, especially for open jointed areas which may allow surface water infiltration into the subgrade.

Continuous Repetitive Traffic Areas and Trash Dump Area, and Loading Dock Area

Concrete pavement is recommended in areas which receive continuous repetitive traffic such as drive-through lanes even if Asphaltic concrete pavement is used in other areas.

A concrete pad of at least 7 inches is recommended in front of trash dump due to high wheel and impact loads that this area receives.

Perimeter Drainage

It is important that proper perimeter drainage be provided so that infiltration of surface water from compacted areas surrounding the pavement is minimized, or if this is not possible, curbs should extend through the base and into the subgrade. A crack sealant compatible to both asphalt and concrete should be installed at the concrete-asphalt interfaces.

The surface water may infiltrate from the compacted areas surrounding the pavement. These areas should be sloped away from the pavement areas and should be grass or concrete

covered or rip-rapped. If a berm is provided before the sloped area, the berm should be sloped at least 1V to 8H. The sloped areas may be as steep as 1V to 3H. The sloped area will provide for drainage of the surface water away from the pavement areas.

CONSTRUCTION GUIDELINES

Construction Monitoring

As Geotechnical Engineer of Record for this project, InTEC, should be involved in monitoring the foundation installation and earth work activities. Performance of any foundation system is not only dependent on the foundation design, but is strongly influenced by the quality of construction. Please contact our office prior of construction so that a plan for foundation and earthwork monitoring can be incorporated in the overall project quality control program.

Site Preparation

Site preparation will consist of removal of the organic material, preparation of the subgrade, and placement of select structural fill. The project geotechnical engineer should approve the subgrade preparation, the fill materials, and the method of fill placement and compaction.

In any areas where soil-supported floor slabs or pavement are to be used, vegetation and all loose or excessively organic material should be stripped to a minimum depth of six inches and removed from the site. Subsequent to stripping operations, the subgrade should be proof rolled prior to fill placement and recompacted to **95 percent of the maximum dry density as determined by ASTM D 698 test method within one percent below or three percent above optimum moisture content.** The exposed subgrade should not be allowed to dry out prior to

placing structural fill. Each lift should be tested by InTEC geotechnical engineer or his representative prior to placement of the subsequent lift.

Voids caused by site preparation should be replaced with select structural fill and compacted in accordance with the select fill compaction recommendations.

Proof Rolling

Proof rolling should be accomplished in order to locate and density any weak compressible zones under the building and pavement areas and prior to placement of the select fill or base. A minimum of 10 passes of a 25 ton pneumatic roller should be used for planning purposes. The operating load and tire pressure should conform to the manufactures specification to produce a minimum ground contact pressure of 90 pound per square inch. Proof rolling should be performed under the observation of the InTEC Geotechnical Engineer or his representative. The soils that yield or settle under proof rolling operations should be removed, dried and compacted or replaced with compacted select fill to grade. Density test should be conducted as specified under Control Testing and Filed Observation after satisfactory proof rolling operation.

Proper site drainage should be maintained during construction so that ponding of surface run-off does not occur and cause construction delays and/or inhibit site access.

Select Fill

Any select fill used under the building should have a liquid limit less than 40 and a plasticity index in between 5 and 20 and be crushed limestone. The fill should contain no particles greater than 3 inches in diameter. **The percent passing U.S. Standard Sieve No. 4 should be in**

between 40 and 80 percent and Sieve No. 40 passing should be in between 10 and 50 percent. The percent passing Sieve No. 200 should be less than 20 percent.

Crushed limestone with sufficient fines to bind the aggregate together is a suitable select structural fill material. The fill materials should be placed in loose lifts not to exceed 8 inches thick and compacted to 95 percent of the maximum dry density as determined by test method ASTM D1557 at a moisture content within 3 percent of the optimum water content. Each lift should be compacted and tested by InTEC representative to verify compaction compliance and approved before placement of the subsequent lifts.

Drainage

Ground water seepage was not encountered in our borings. However, minor ground water seepage may be encountered within the proposed building foundations and grading excavations at the time of construction, especially after periods of heavy precipitation. **Small quantities of seepage may be handled by conventional sump and pump methods of dewatering.**

Temporary Drainage Measures

Temporary drainage provisions should be established, as necessary, to minimize water runoff into the construction areas. If standing water does accumulate, it should be removed by pumping as soon as possible.

Adequate protection against sloughing of soils should be provided for workers and inspectors entering the excavations. This protection should meet O.S.H.A. and other applicable building codes.

Temporary Construction Slopes

Temporary slopes on the order of 1H to 1V may be provided for excavations through Strata I and II clays.

Fill slopes on the order of 1H to 1V may be used provided a) the fill materials are compacted as recommended and b) the slopes are temporary.

Fill slopes should be compacted. Compacting operations shall be continued until the slopes are stable but not too dense for planting on the slopes. Compaction of the slopes may be done in increments of 3 to 5-ft in fill height or the fill is brought to its total height for shallow fills.

Permanent Slopes

Maximum permanent slope of 1V to 3H is recommended in Stratum I and II clays. In areas where people walk on sloped areas, a slope of 1V to 5H is recommended.

Time of Construction

If the foundation slab is installed during or after an extended dry period, the slab may experience greater movement around the edges when the soil moisture content increases, such as due to rain or irrigation. Similarly, a slab installed during or after a wet period may experience greater movement around the edges during the subsequent drying of the soils.

Ground Water

In any areas where significant cuts (2-ft or more) are made to establish final grades for building pads, attention should be given to possible seasonal water seepage that could occur through natural cracks and fissures in the newly exposed stratigraphy. Subsurface drains may be

required to intercept seasonal groundwater seepage. The need for these or other dewatering devices on building pads should be carefully addressed during construction. Our office could be contacted to visually inspect final pads to evaluate the need for such drains.

The ground water seepage may happen several years after construction if the rainfall rate or drainage changes within the project site or outside the project site. If seepage run off occurs towards the building an engineer should be called on to evaluate its effect and provision of French Drains at this location.

Control Testing and Field Observation

Subgrade preparation and select structural fill placement should be monitored by the project geotechnical engineer or his representative. **As a guideline, at least one in-place density test should be performed for each 3,000 square feet of compacted surface lift**. However, a minimum of three density tests should be performed on the subgrade or per lift of compaction. Any areas not meeting the required compaction should be re-compacted and retested until compliance is met.

Drilled Piers

Field Observations Each drilled pier excavation must be monitored by a qualified individual of InTEC who is familiar with the geotechnical aspects of the soil stratigraphy, structural configuration, foundation design details and assumptions prior to placing concrete. This is to observe that:

(1) The footing has been drilled to the specific dimensions at the correct depth established by the previously mentioned criteria;

(2) The bottom of the footing is concentric to the pier shaft;

(3) The pier shaft has been drilled plumb within specified tolerances along its total length;

(4) Excessive cuttings, build-up and soft, compressible material have been moved from the bottom of the excavation.

Placement of concrete should be accomplished as soon as possible for each footing to reduce changes in the moisture content or the state of stress of the foundation soils. No footings should be concreted without the approval of the project geotechnical engineer. No completed footing excavation should be left overnight without concreting.

Surface run off or ground water seepage accumulating in the excavation should be pumped out and the condition of the bearing surface should be evaluated immediately prior to placing concrete.

Casing Ground water seepage was not observed in our borings and not within the proposed pier depth during drilling. Moist samples were obtained at approximate depths of 8 and 9-ft in our borings during drilling. Ground water seepage may be encountered at the time of pier construction, especially after periods of heavy rainfall at some pier locations. Zones of sloughing soils may happen during pier construction. We recommend that the bid documents require the foundation contractor to specify unit costs for different lengths of casing which may be required.

If groundwater seepage occurs, the use of casing should help to minimize groundwater inflow into the pier excavation, although it may not alleviate seepage from the soils. If seepage persists even after casing installation, the water should be pumped out of the excavation immediately prior to placing concrete. **If groundwater inflow is too severe to be controlled by pumping, the concrete should be tremied to the full depth of the excavation to effectively**

displace the water. In this case, a "clean-out" bucket should be utilized to remove the soil from the pier bottom before placing steel and concrete.

If casing is utilized, removal of the casing should be performed with extreme care under proper supervision to minimize mixing of the surrounding soil and water with the concrete.

Variation in drilled shaft depths should be anticipated at this site. Contract documents should include pay items for constructing drilled shafts on a unit price basis.

Drilling Equipment **High power and high torque drilling equipment will be required to drill through the hard clays encountered at this site**.

DRAINAGE AND MAINTENANCE

Final drainage is very important for the performance of the proposed new Sanctuary and possible new Administration Buildings for University Baptist Church at 6465 Babcock Road in San Antonio and the pavement. Landscaping, plumbing, and downspout drainage is also very important. It is vital that all roof drainage be transported away from the buildings so that no water ponds around the building which can result in soil volume change under the buildings. Plumbing leaks should be repaired as soon as possible in order to minimize the magnitude of moisture change under the slab. Large trees and shrubs should not be planted in the immediate vicinity of the structures, since root systems can cause a substantial reduction in soil volume in the vicinity of the trees during dry periods.

Adequate drainage should be provided to reduce seasonal variations in moisture content of foundation soils. All pavement and sidewalks within 10-ft. of the structures should be sloped away from the structures to prevent ponding of water around the foundations. Final grades within 10-ft. of the structures should be adjusted to slope away from structures preferably at a

minimum slope of 3 percent. Maintaining positive surface drainage throughout the life of the structures is essential.

In areas with pavement or sidewalks adjacent to the new structures, a positive seal must be provided and maintained between the structures and the pavement or sidewalk to minimize seepage of water into the underlying supporting soils. Post-construction movement of pavement and flat-work is not uncommon. Maximum grades practical should be used for paving and flatwork to prevent areas where water can pond. In addition, allowances in final grades should take into consideration post construction movement of flatwork particularly if such movement would be critical. Normal maintenance should include inspection of all joints in paving and sidewalks, etc. as well as re-sealing where necessary.

Several factors relate to civil and architectural design and/or maintenance which can significantly affect future movements of the foundation and floor slab system:

1. **Where positive surface drainage cannot be achieved** by sloping the ground surface adjacent to the buildings, **a complete system of gutters and downspouts should carry runoff water a minimum of 10-ft from the completed structures**.

2. **Planters located adjacent to the structures should preferably be self contained**. Sprinkler mains should be located a minimum of five feet from the building line.

3. **Planter box structures** placed adjacent to building should be provided with a means to assure concentrations of water are not available to the subsoils stratigraphy.

4. **Large trees and shrubs should not be allowed closer to the foundations** than a horizontal distance equal to roughly their mature height due to their significant moisture demand upon maturing.

5. Moisture conditions should be maintained "constant" around the edge of the slabs. **Ponding of water in planters, in unpaved areas, and around joints in paving and sidewalks can cause slab movements beyond those predicted in this report**.

6. **Roof drains should discharge on pavement or be extended away from the structures**. Ideally, roof drains should discharge to storm sewers by closed pipe.

Trench backfill for utilities should be properly placed and compacted as outlined in this report and in accordance with requirements of local City Standards. Since granular bedding backfill is used for most utility lines, the backfilled trench should be prevented from becoming a conduit and allowing an access for surface or subsurface water to travel toward the new structures. Concrete cut-off collars or clay plugs should be provided where utility lines cross building lines to prevent water traveling in the trench backfill and entering beneath the structures.

The P.V.R. values estimated and stated under Vertical Movements are based on provision and maintenance of positive drainage to divert water away from the structures and the pavement areas. If the drainage is not maintained, the wetted front may move below the assumed twelve feet depth, and resulting **P.V.R. will be much greater than 2 or 3 times the stated values under Vertical Movements. Utility line leaks may contribute water and cause similar movements to occur.**

Dry Periods

Close observations should be made around foundations during extreme dry periods to ensure that adequate watering is being provided to keep soil from separating or pulling back from the foundation.

LIMITATIONS

The analysis and recommendations submitted in this report are based upon the data obtained from four borings drilled at the site. This report may not reflect the exact variations of the soil conditions across the site. The nature and extent of variations across the site may not become evident until construction commences.

If variations then appear evident, it will be necessary to re-evaluate our recommendations after performing on-site observations and tests to establish the engineering significance of any variations.

Final plans for the proposed buildings should be reviewed by the project geotechnical engineer so that he may determine if change in the foundation recommendations are required.

The project geotechnical engineer declares that the findings, recommendations or professional advice contained herein have been made and this report prepared in accordance with generally accepted professional engineering practice in the fields of Geotechnical Engineering and Engineering Geology. No other warranties are implied or expressed.

This report has been prepared for the exclusive use of the owner, the Project Architect, the Project Structural Engineer, and contractors **for the specific application to the proposed new structures at Beacon Hill Linear Park at 1406 Michigan Avenue and Gramercy Play Park in San Antonio, Texas.**

inTEC Integrated Testing and Engineering Company of San Antonio, L.P.
Geotechnical & Environmental Engineering • Construction Services • Geologic Assessment

February 23, 2011

E.A. Palaniappan, Ph. D., P.E.
Murali Subramaniam, Ph. D., P.E.
Kaushi Subramaniam, B.S.

Capital Improvements Management Services
City of San Antonio
San Antonio, Texas

Attention: **Ms. Alma Nunez, San Antonio Parks and Recreation**

Re: Subsurface Exploration and Foundation Analysis
Beacon Hill Linear Park Project
1406 Michigan Avenue and Gramercy Play Park
San Antonio, Texas

InTEC Project No. S111604

Gentlemen:

The following geotechnical engineering parameters are presented for use with LPILE PLUS for Windows Program:

Depth Range Ft.	Shear Strength, TSF	KIN PCI	E50	y PCF
08 – 15	0.8	875	0.0025	98
15 – 30	1.0	875	0.0026	99

We **appreciate and wish to thank you for the opportunity** to be of service to you on this project. If we can be of additional assistance during the materials testing-quality control phase of construction, please call us.

Respectfully Submitted,

Very Truly Yours,
InTEC of San Antonio, L.P.

STATE OF TEXAS
MURALIK SUBRAMANIAM
102417
LICENSED
PROFESSIONAL ENGINEER

InTEC of SAN ANTONIO
F-7623

Murali Subramaniam, Ph.D., P.E.

E.A. "Paul" Palaniappan, Ph.D., P.E.
CHIEF ENGINEER

Copies Submitted: Above (1)

Austin (512) 252-1218 fax (512) 252-1219
Denver (303) 463-9317 fax (303) 463-9321
DFW Metro (817) 858-0870 fax (817) 858-0036
Houston (281) 371-3330 fax (281) 371-3334
Louisiana (985) 878-8690 fax (985) 878-8692

Illustration Section

Subsurface Exploration and Foundation Analysis Beacon Hill Linear Park Project San Antonio, Texas		
	InTEC Project Number: **S111604**	Date: 02/23/2011

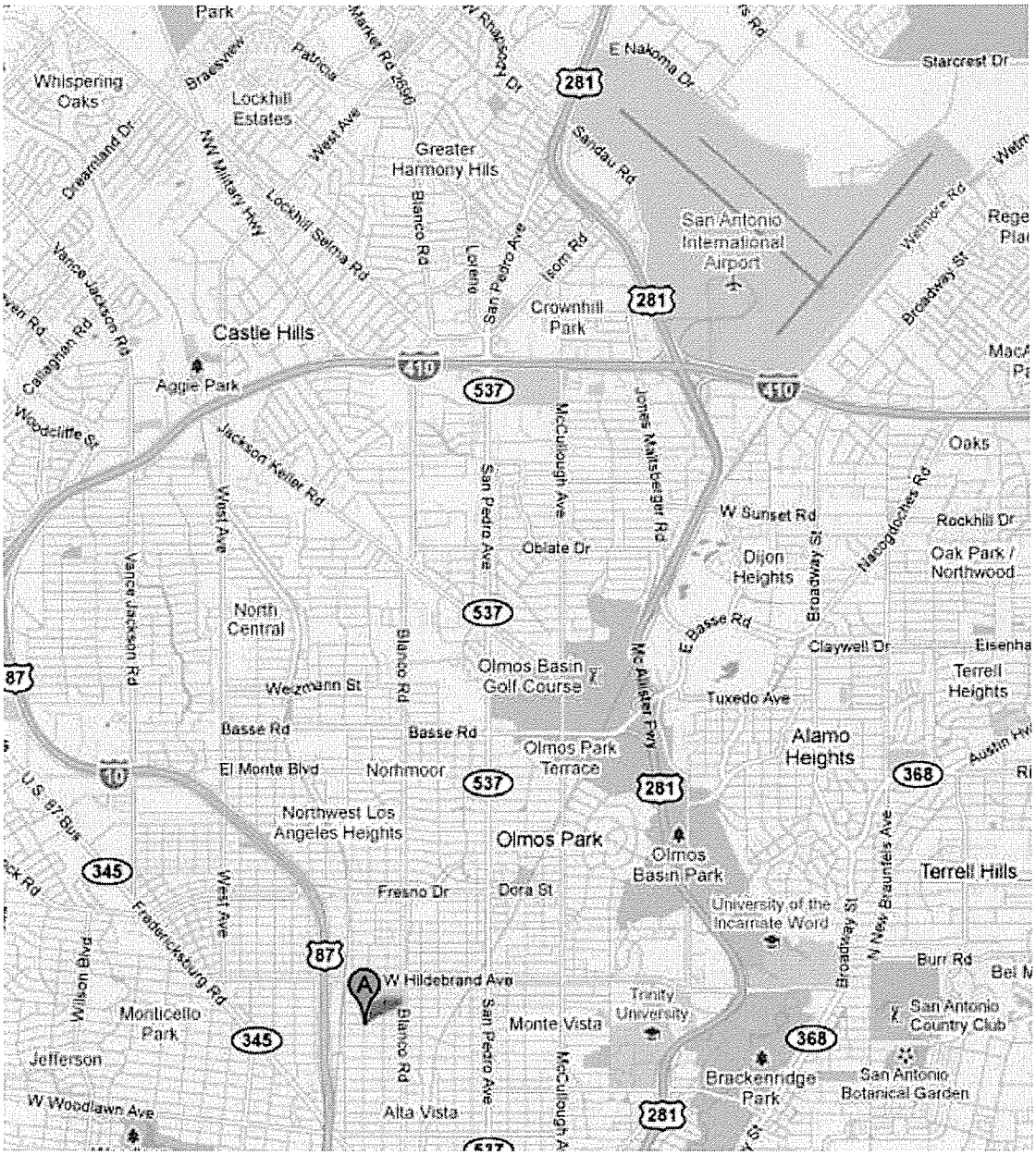

Subsurface Exploration and Foundation Analysis Beacon Hill Linear Park Project San Antonio, Texas	**Vicinity Map**	
	InTEC Project Number: **S111604**	Date: 02/23/2011

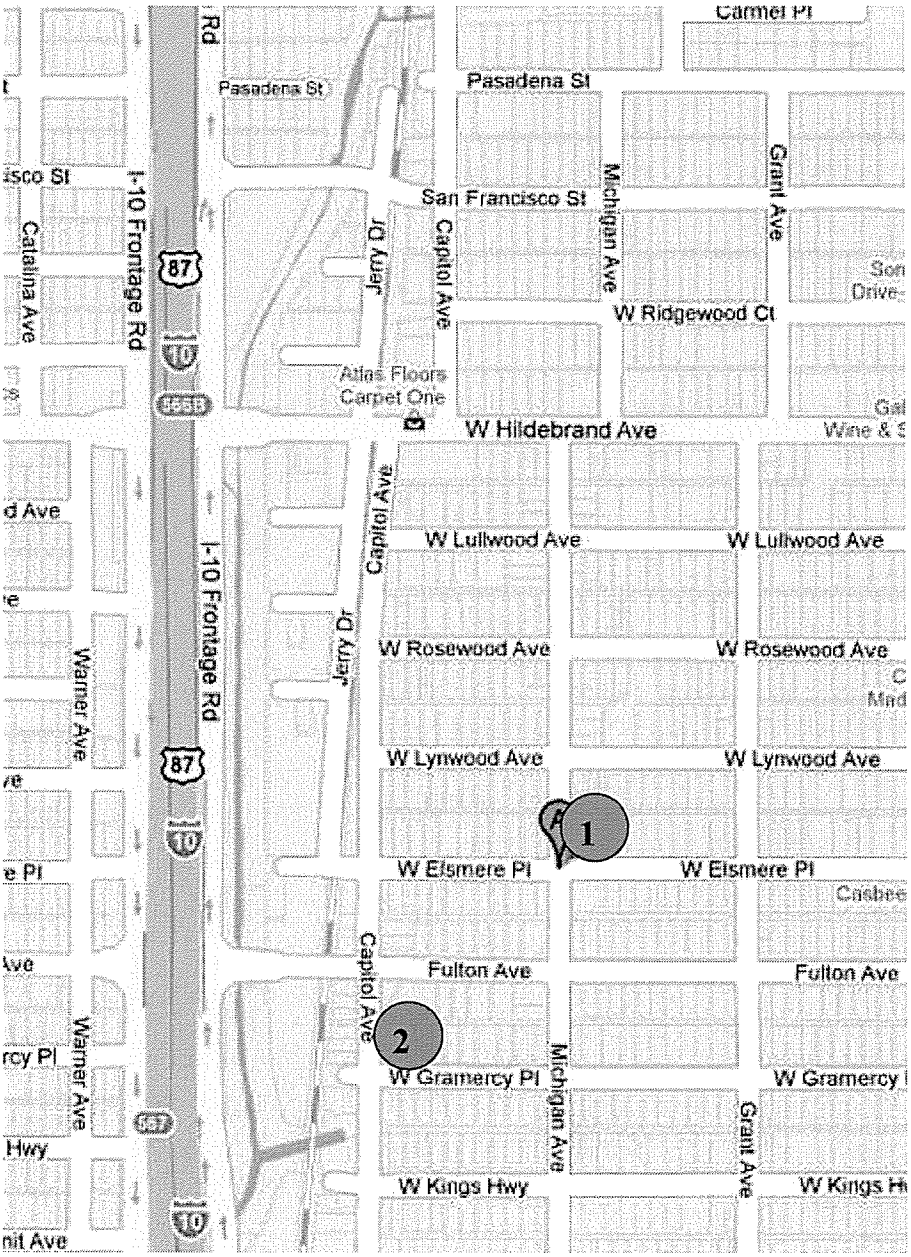

Subsurface Exploration and Foundation Analysis Beacon Hill Linear Park Project San Antonio, Texas	**Specific Locations**	
	InTEC Project Number: **S111604**	Date: 02/23/2011

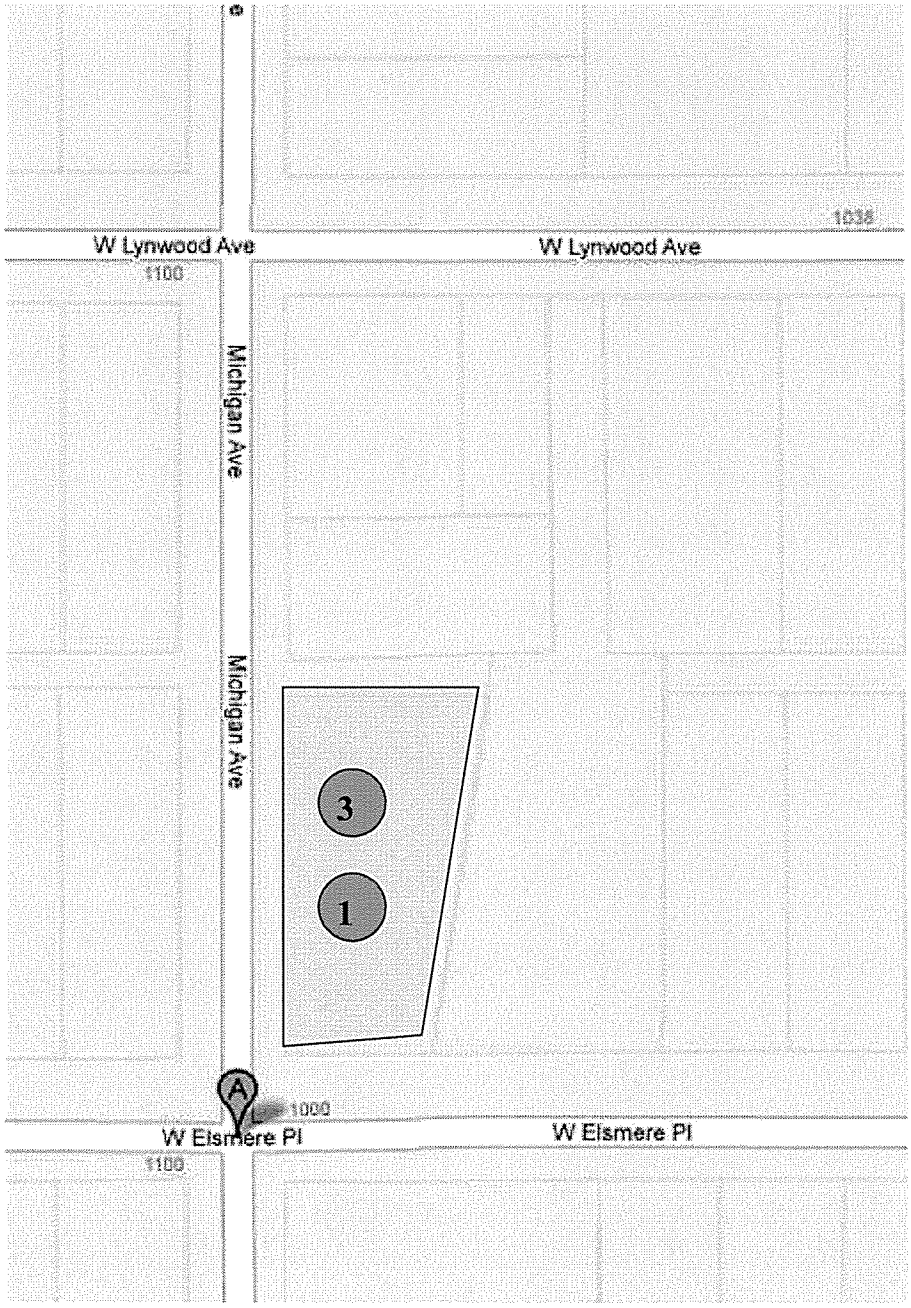

Subsurface Exploration and Foundation Analysis Beacon Hill Linear Park Project San Antonio, Texas	**1st Location: Approximate Boring Locations**	
	InTEC Project Number: **S111604**	Date: 02/23/2011

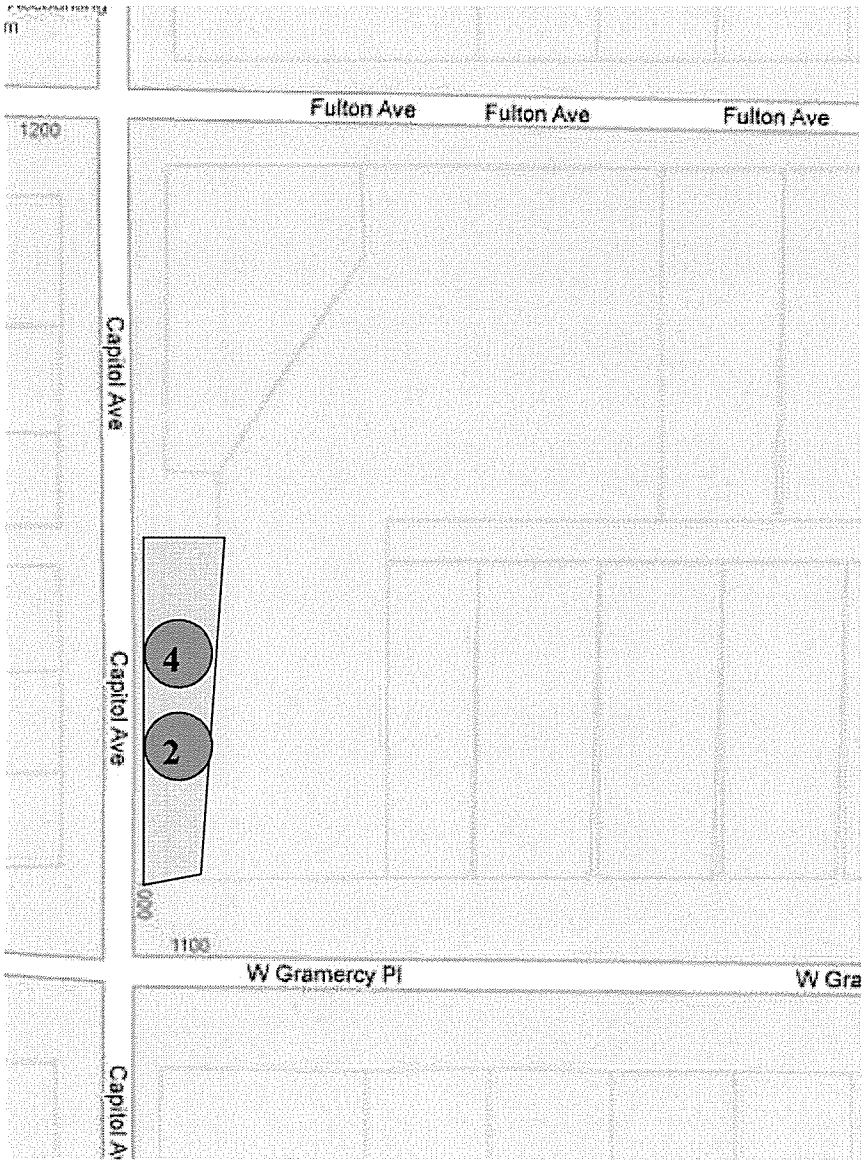

Subsurface Exploration and Foundation Analysis Beacon Hill Linear Park Project San Antonio, Texas	**2nd Location Approximate Boring Locations**	
	InTEC Project Number: **S111604**	Date: 02/23/2011

KEY TO CLASSIFICATIONS AND SYMBOLS

Soil Fractions

Component	Size Range
Boulders	Greater than 12"
Cobbles	3" - 12"
Gravel	3" - #4 (4.76mm)
Coarse	3" - ¾"
Fine	¾" - #4
Sand	#4 - #200 (0.074mm)
Coarse	#4 - #10 (2.00mm)
Medium	#10 - #40 (0.42mm)
Fine	#40 - #200 (0.074mm)
Silt and Clay	Less than #200

Soil or Rock Types
(Shown in symbols column)
(Predominate Soil Types Shown Heavy)

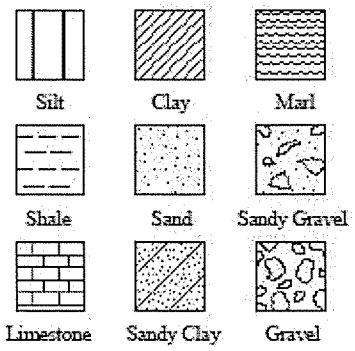

TERMS DESCRIBING SOIL CONSISTENCY

Description (Cohesive Soils)	Unconfined Compression TSF	Blows/Ft. Std. Penetration Test	Description (Cohesionless Soils	Blows/Ft. Std. Penetration Tests
Very Soft	0.25	<2	Very Loose	0 – 4
Soft	0.25 – 0.50	2 – 4	Loose	4 – 10
Firm	0.50 – 1.00	4 – 8	Medium Dense	10 – 30
Stiff	1.00 – 2.00	8 – 15	Dense	30 – 50
Very Stiff	2.00 – 4.00	15 – 30	Very Dense	50
Hard	>4.00	>30		

SOIL STRUCTURE

Calcareous	Containing deposits of calcium carbonate; generally nodular.
Slickenside	Having inclined planes of weakness that are slick and glossy in appearance.
Laminated	Composed of thin layers of varying color and texture.
Fissured	Containing shrinkage cracks frequently filled with fine sand or silt. Usually more or less vertical.
Interbedded	Composed of alternate layers of different soil types.
Jointed	Consisting of hair cracks that fall apart as soon as the confining pressure is removed.
Varved	Consisting of alternate thin layers of sand, silt or clay formed by variations in sedimentations during the various seasons of the year, of often exhibiting contrasting colors when partially dried. Each layer is generally less than ½" in thickness.
Stratified	Composed of, or arranged in layers (usually 1 inch or more)
Well-graded	Having a wide range of grain sizes and substantial amount of all intermediate particle sizes.
Poorly or Gap-graded	Having a range of sizes with some intermediate sizes missing.
Uniformly-graded	Predominantly of one grain size.

Subsurface Exploration and Foundation Analysis Beacon Hill Linear Park Project San Antonio, Texas		
	InTEC Project Number: **S111604**	Date: 02/23/2011

LOG OF BORING NO. B-1

PROJECT: Beacon Hill Linear Park (Michigan) **DATE:** 2/18/2011

LOCATION: San Antonio, Texas **PROJECT NO:** S111604

SUBSURFACE PROFILE

DEPTH	SYMBOL	SAMPLES	SOIL DESCRIPTION Surf. Elev.	UNIT DRY WT. IN PCF	S.S. BY P.P.	BLOWS PER FOOT	SHEAR STRENGTH TSF	LIQUID LIMIT	PLASTICITY INDEX	Water Content % (20 40 60 80)
		ST	Stiff to Very Stiff Dark Brown Clay		0.6			74	55	
		ST	-with Gravel and Caliche		0.8					
5		SS	Very Stiff to Hard Tan Clay to Tan and Gray Clay			22		56	41	
		SS	-with Gravel			30				
10										
		SS								
15						39		65	48	
		SS								
20						32				
		SS								
25						39		74	53	
		SS								
30						44				
35										
40										
45										
50										

Completion Depth 30' Ground Water Observed No Date: 2/18/2011

S.S. by P.P.- Shear Strength in TSF by Hand Penetrometer

S.S.- Split Spoon Sample
S.T.- Shelby Tube Sample
AU- Auger Sample

L.L- Liquid Limit
P.L.- Plastic Limit
M.C.- Moisture Content

Plate: 2

LOG OF BORING NO. B-2

PROJECT: Beacon Hill Linear Park (Gramercy) **DATE:** 2/18/2011

LOCATION: San Antonio, Texas **PROJECT NO:** S111604

SUBSURFACE PROFILE

DEPTH	SYMBOL	SAMPLES	SOIL DESCRIPTION Surf. Elev.	UNIT DRY WT. IN PCF	S.S. BY P.P.	BLOWS PER FOOT	SHEAR STRENGTH TSF	LIQUID LIMIT	PLASTICITY INDEX	Water Content % (20 40 60 80)
		ST	Stiff Dark Brown Clay		0.5					
		ST	Very Stiff to Hard Tan Clay to Tan and Gray Clay		0.7			78	58	
5		SS				24				
		SS	Moist sample at 8-ft							
10						19		72	54	
		SS								
15						24				
		SS								
20						28				
		SS								
25						36				
		SS								
30						39				
35										
40										
45										
50										

Completion Depth 30' Ground Water Observed No Date: 2/18/2011

S.S. by P.P.- Shear Strength in TSF by Hand Penetrometer

S.S.- Split Spoon Sample
S.T.- Shelby Tube Sample
AU- Auger Sample

L.L- Liquid Limit
P.L.- Plastic Limit
M.C.- Moisture Content

Plate: 3

LOG OF BORING NO. B-3

PROJECT: Beacon Hill Linear Park (Michigan) **DATE:** 2/22/2011

LOCATION: San Antonio, Texas **PROJECT NO:** S111604

SUBSURFACE PROFILE

DEPTH	SYMBOL	SAMPLES	SOIL DESCRIPTION Surf. Elev.	UNIT DRY WT. IN PCF	S.S. BY P.P.	BLOWS PER FOOT	SHEAR STRENGTH TSF	LIQUID LIMIT	PLASTICITY INDEX	Water Content % (20 40 60 80)
		ST	Stiff to Very Stiff Dark Brown Clay		0.7					
		ST	-with Gravel and Caliche							
5		SS	Very Stiff to Hard Tan Clay to Tan and Gray Clay		0.9	24		75	54	
10		SS	-with Gravel			32				
15		SS				39				
20		SS				38				
25		SS	-with Dark Tan Clay below 26-ft			43		81	60	
30		SS				49				
35										
40										
45										
50										

Completion Depth 30' Ground Water Observed No Date: 2/22/2011

S.S. by P.P.- Shear Strength in TSF by Hand Penetrometer

S.S.- Split Spoon Sample
S.T.- Shelby Tube Sample
AU- Auger Sample

L.L- Liquid Limit
P.L.- Plastic Limit
M.C.- Moisture Content

Plate: 4

LOG OF BORING NO. B-4

PROJECT: Beacon Hill Linear Park (Gramercy) **DATE:** 2/22/2011

LOCATION: San Antonio, Texas **PROJECT NO:** S111604

SUBSURFACE PROFILE

DEPTH	SYMBOL	SAMPLES	SOIL DESCRIPTION Surf. Elev.	UNIT DRY WT. IN PCF	S.S. BY P.P.	BLOWS PER FOOT	SHEAR STRENGTH, TSF	LIQUID LIMIT	PLASTICITY INDEX	Water Content % (20 40 60 80)
		ST	Fill: Brown Clay		0.6			76	54	
			Stiff Dark Brown Clay							
		ST	Very Stiff to Hard Tan Clay to Tan and Gray Clay		0.8					
5		SS	- Gravel Seam at 6-ft			29				
		SS	- Dark Tan Clay to 6-ft							
10			- Moist sample at 9-ft			18				
		SS								
15						21				
		SS								
20						31				
		SS								
25						38				
		SS								
30						41		81	61	
35										
40										
45										
50										

Completion Depth 30' Ground Water Observed No Date: 2/22/2011

S.S. by P.P.- Shear Strength in TSF by Hand Penetrometer

S.S.- Split Spoon Sample
S.T.- Shelby Tube Sample
AU- Auger Sample

L.L- Liquid Limit
P.L.- Plastic Limit
M.C.- Moisture Content

8'–0"

4'–0"

CITY OF SAN ANTONIO

"A" "A"

BEACON HILL LINEAR PARK
$ 837,837.57 CAPITAL IMPROVEMENTS PROJECT
FUNDING: HUD 108 CDBG & CERTIFICATES 0F OBLIGATION

DESIGN: RVK-ARCHITECTS, INC. /JASTER-QUINTANILLA SAN ANTONIO, LLP

CONTRACTOR: XXXXXXXX

1'–2" 4" 2 1/2" 0'–5 1/2" 1'–0" 1'–0"

Capital Improvements Management Services

San Antonio Parks and Recreation Department

CITY MANAGER
Sheryl Sculley

CHIEF OF POLICE
William McManus

FIRE CHIEF
Charles N. Hood

CIMS DIRECTOR
Mike Frisbie, P.E.

BLACK TEXT

MAYOR
Julián Castro

CITY COUNCIL

Mary Alice P. Cisneros
Ivy R. Taylor
Jennifer V. Ramos
Philip A. Cortez
David Medina, Jr.
Ray Lopez
Justin Rodriguez
W. Reed Williams
Elisa Chan
John G. Clamp

WHI
BAC

FOR MORE INFORMATION CALL 207-8140
AFTER HOURS EMERGENCIES CALL 311 AND REFER TO PROJECT NAME

Left border shall be determined using the longest line centered on the sign providing equal borders.

Exterior type high density overlaid plywood or other approved material suitable for signs.

1 1/4"
1/2"
3
4"

Provide adequate supports for sign as site conditions may require and keep sign proper distance above prevailing grade to permit viewing.

GRADE

SECTION 02721

AGGREGATE BASE COURSE

PART 1 GENERAL

1.01 SECTION INCLUDES

A. Aggregate base course.

1.02 RELATED SECTIONS

A. Section 02310 - Grading

B. Section 02316 - Fill and Backfill

C. Section 02770 - Concrete Sidewalks and Curbs and Gutters

D. Section 02783 - Concrete Pavers.

E. Section 02786 - Aggregate Pathways.

1.03 REFERENCES

A. ASTM D 1556 - Standard Test Method for Density and Unit Weight of Soil in Place by the Sand-Cone Method; 2000.

B. ASTM D 2487 - Standard Practice for Classification of Soils for Engineering Purposes (Unified Soil Classification System); 2000.

C. ASTM D 3515 - Standard Specification for Hot-Mixed, Hot-Laid Bituminous paving Mixtures; 2001.

1.04 SUBMITTALS

A. See Section 01300 - Administrative Requirements, for submittal procedures.

B. Compaction Density Test Reports.

1.05 PROJECT CONDITIONS

A. Provide sufficient quantities of aggregate to meet project schedule and requirements. When necessary, store materials on site in advance of need.

B. When aggregate materials need to be stored on site, locate stockpiles where designated by Owner's Representative.
   1. Separate differing materials with dividers or stockpile separately to prevent intermixing.
   2. Prevent contamination.
   3. Protect stockpiles from erosion and deterioration of materials.

C. Verify that survey bench marks and intended elevations for the Work are as indicated.

PART 2 PRODUCTS

2.01 MATERIALS

A. Flexible Base: Refer to the City of San Antonio, Texas Department of Public Works, Standard specification for Public Works Construction latest revision, Item 200 Flexible Base. Use flexible base with maximum aggregate size of 3/4".

B. Asphalt Treated Base: Refer to the City of San Antonio, Texas Department of Public Works, Standard Specifications for Public Works Construction latest revision, Item 206 Asphalt Treated Base.

C. Aggregate at pervious pavers. Decomposed granite with fines evenly mixed throughout the aggregate available from Keller Material, San Antonio, Texas 210-648-4221.

D. Pre-emergent Herbicide: XL- 2G manufactured by Dow Elanco or approved equal.

E. Post Emergent Herbicide: Round-Up or approved equal.

2.02 SOURCE QUALITY CONTROL

A. See Section 01400 - Quality Requirements, for general requirements for testing and analysis of aggregate materials.

B. Where aggregate materials are specified using ASTM D 2487 classification, test and analyze samples for compliance before delivery to site.

C. Provide materials of each type from same source throughout the Work.

PART 3 EXECUTION

3.01 EXAMINATION

A. Verify substrate has been inspected, gradients and elevations are correct, and is dry.

3.02 PREPARATION

A. Correct irregularities in substrate gradient and elevation by scarifying, reshaping, and re-compacting.

B. Do not place aggregate on soft, muddy, or frozen surfaces.

3.03 INSTALLATION

A. Under Bituminous Concrete Paving:
   1. Place coarse aggregate to compacted thickness indicated.
   2. Compact to 95 percent of maximum dry density.

B. Under Portland Cement Concrete Paving:
   1. Place aggregate to compacted thickness indicated.
   2. Compact to 95 percent of maximum dry density.

C. Under Portland Cement Concrete Paving and decomposed granite trail:
   1. Place aggregate to compacted thickness indicated.
   2. Compact to 95 percent of maximum dry density.

D. Level and contour surfaces to elevations and gradients indicated.

E. Add small quantities of fine aggregate to coarse aggregate as appropriate to assist compaction.

F. Add water to assist compaction. If excess water is apparent, remove aggregate and aerate to reduce moisture content.

G. Use mechanical tamping equipment in areas inaccessible to compaction equipment.

H. Apply herbicide to finished surface.

3.04 TOLERANCES

A. Flatness: Maximum variation of 1/4 inch measured with 10 foot straight edge.

B. Scheduled Compacted Thickness: Within 1/4 inch.

C. Variation From Design Elevation: Within 1/4 inch.

3.05 FIELD QUALITY CONTROL

A. See Section 01400 - Quality Requirements, for general requirements for field inspection and testing.

B. Compaction density testing will be performed on compacted aggregate base course in accordance with ASTM D1556.

C. If tests indicate work does not meet specified requirements, remove work, replace and retest.

D. Frequency of Tests: every 1000 square feet.

E. Proof roll compacted aggregate at surfaces that will be under slabs-on-grade, pavers, and paving.

3.06 CLEAN-UP

A. Leave unused materials in a neat, compact stockpile.

B. Remove unused stockpiled materials, leave area in a clean and neat condition. Grade stockpile area to prevent standing surface water.

C. Leave borrow areas in a clean and neat condition. Grade to prevent standing surface water.

END OF SECTION

Xscape

GameTime A PLAYCORE COMPANY

Enriching Childhood Through Play.

1-800-235-2440

ISSUED/REVISED: 5/19/10

36033
BONGOS

⬡ = INSTALLATION DETAIL

○ = PARTS LIST REFERENCE

INSTRUCTIONS

1. Before assembling this equipment, read the enclosed INSTALLATION INSTRUCTIONS in the installation booklet; follow all the instructions during installation.
2. Assemble parts as shown in the ASSEMBLY DRAWING. Refer to the assembly details for the specific hardware required in each connection.
3. Loctite (supplied by others) should be used on all threaded hardware.

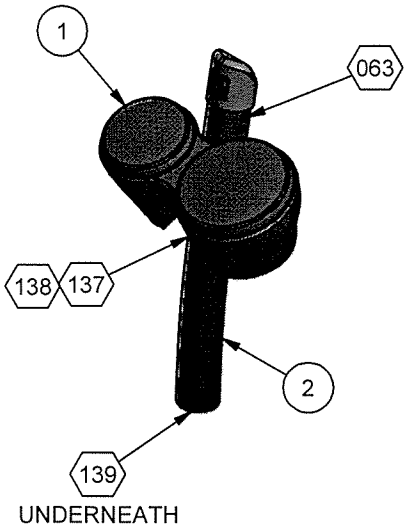

ASSEMBLY DRAWING

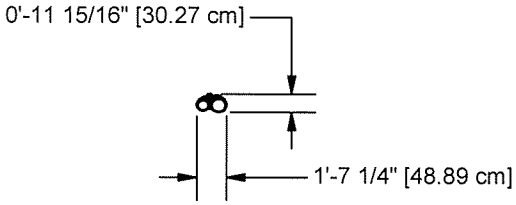

TOP VIEW

BEACON HILL PARK, ADDENDUM 1, ATTACHMENT "J", 4 PGS

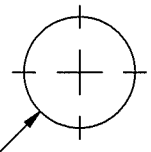

Ø1'-6" [45.72 cm] x
2'-6" [76.20cm] DEEP

CONCRETE REQUIRED
.10 CUBIC YARDS
(.08 CUBIC METERS)

GROUND PLAN

Parts List			
REF.	DESCRIPTION	QTY	PART NUMBER
1	BONGOS	1	177954
2	UPRIGHT WITH INSERTS	1	201304
	HARDWARE COMPLETE	1	201305
	3/8" x 1/2" P.B.H.C.S. w/PATCH	2	812049*
	3/8" x 1" P.B.H.C.S. w/ PATCH	4	812050*
	3/8" LOCKWASHER	4	817334*
	3/8" FLAT WASHER	2	817410*
	3/8" FLAT WASHER (1 1/4" O.D.)	4	817424*
	ANCHOR ROD	1	135038*
	POST TOPPER	1	178676*

Unless Otherwise Specified, All Units of Measure are Each
** Included in Hardware*

Warning: During Installation, Hardware And Small Parts Are Choking Hazards For Young Children. Store Unused Parts Appropriately Until Assembly Is Completed. Once Assembly Is Completed, Remove Any Unused Parts From The Play Environment And Dispose/Save Them In A Secure Location.
Note: Peen Tee-Nuts and Flatwashers to match radius of pipe after assembly is complete.

DETAILS -for-
36033

IMPORTANT

TO REDUCE THE RISK OF CLOTHING ENTANGLEMENT IN COMPLIANCE WITH ASTM F1487, ANY BOLT END PROTRUDING MORE THAN TWO FULL THREADS BEYOND THE FACE OF THE NUT SHALL BE CUT-OFF FLUSH, FILED SMOOTH AND TREATED TO PREVENT CORROSION.

NOTE: LOCTITE (SUPPLIED BY OTHERS) SHOULD BE USED ON ALL THREADED HARDWARE.

NOTE: AFTER ASSEMBLY IS COMPLETE, PEEN TEE-NUTS AND FLATWASHERS TO MATCH RADIUS OF PIPE.

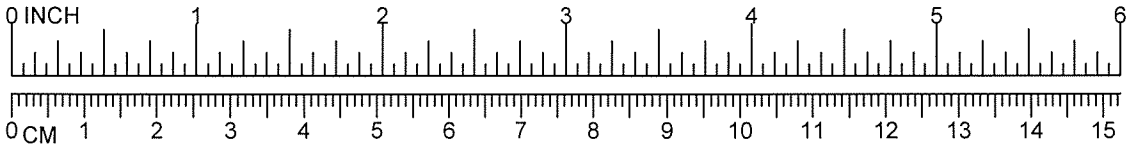

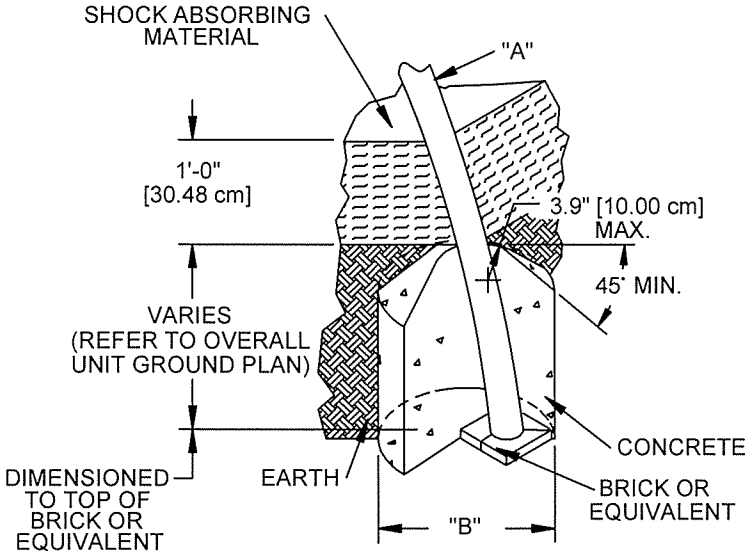

DIA. "A" (PIPE SIZE)	DIA. "B" (FOOTING SIZE)
1 1/16" [2.70 cm]	1'-2" [35.56 cm]
1 5/16" [3.33 cm]	1'-2" [35.56 cm]
1 5/8" [4.13 cm]	1'-2" [35.56 cm]
1 7/8" [4.83 cm]	1'-2" [35.56 cm]
2 3/8" [6.03 cm]	1'-2" [35.56 cm]
3 1/2" [8.89 cm]	1'-6" [45.72 cm]
SWINGS	
3 1/2" [8.89 cm]	2'-0" [60.96 cm]

NOTES:
-SLOPED FOOTING IS A REQUIREMENT OF EUROPEAN STANDARD EN1176-1
-SUGGESTED MINIMUM CONCRETE RATING: 3000 PSI

003

SHOCK ABSOBING PROPERTIES OF SURFACING MATERIALS VARY. IF YOU DETERMINE THAT LESS THAN 1'-0" [30.48cm] OF SURFACING IS REQUIRED, MAKE UP THE DIFFERENCE IN ELEVATION WITH EARTH, BEFORE APPLYING SURFACING.

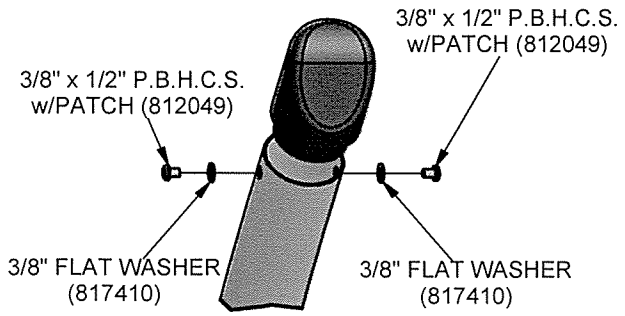

063

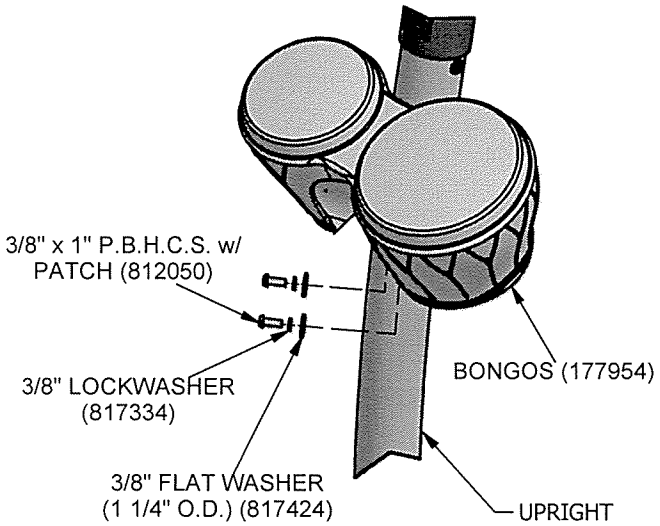

137

DETAILS -for-
36033

IMPORTANT

TO REDUCE THE RISK OF CLOTHING ENTANGLEMENT IN COMPLIANCE WITH ASTM F1487, ANY BOLT END PROTRUDING MORE THAN TWO FULL THREADS BEYOND THE FACE OF THE NUT SHALL BE CUT-OFF FLUSH, FILED SMOOTH AND TREATED TO PREVENT CORROSION.

NOTE: LOCTITE (SUPPLIED BY OTHERS) SHOULD BE USED ON ALL THREADED HARDWARE.

NOTE: AFTER ASSEMBLY IS COMPLETE, PEEN TEE-NUTS AND FLATWASHERS TO MATCH RADIUS OF PIPE.

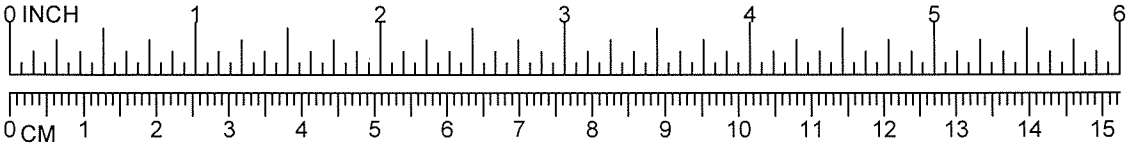

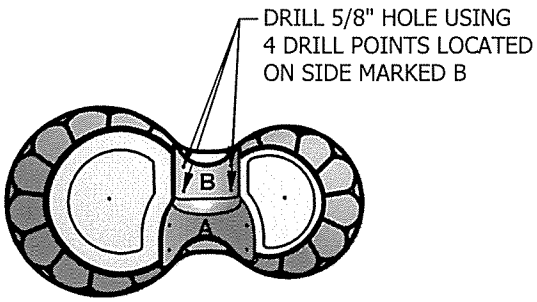

138

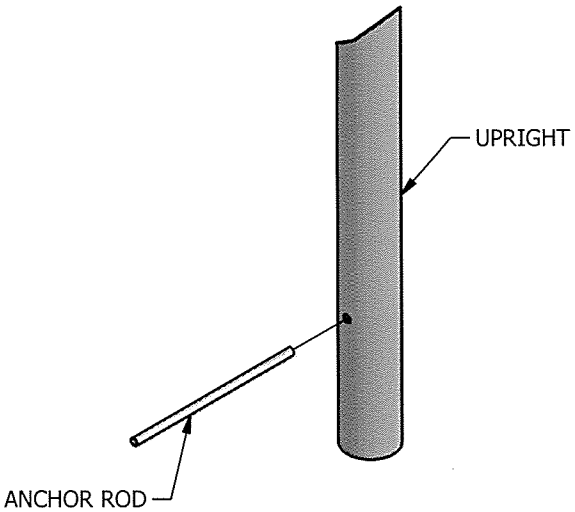

139

KOMPAN Product Info

FREEGAME Goals • FRE2210/2211/2212/2213

kompaninfo.com

BEST USER AGE: 5–12 years

FOOTING INFORMATION: Only available for in-ground installation.

FREEGAME

FRE2210
FREEGAME Goal 3M • 9'10"

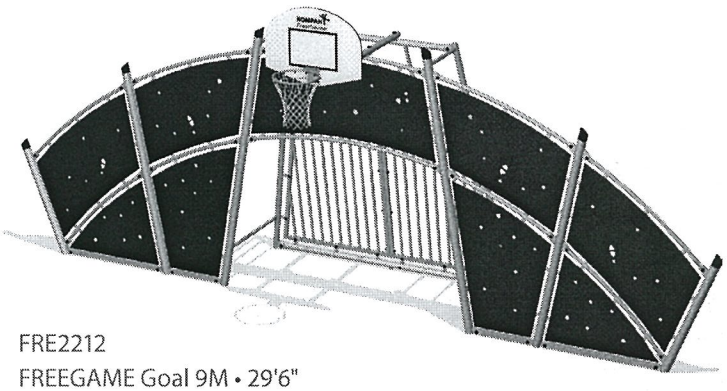

FRE2212
FREEGAME Goal 9M • 29'6"

FRE2211
FREEGAME Goal 5M • 16'5"

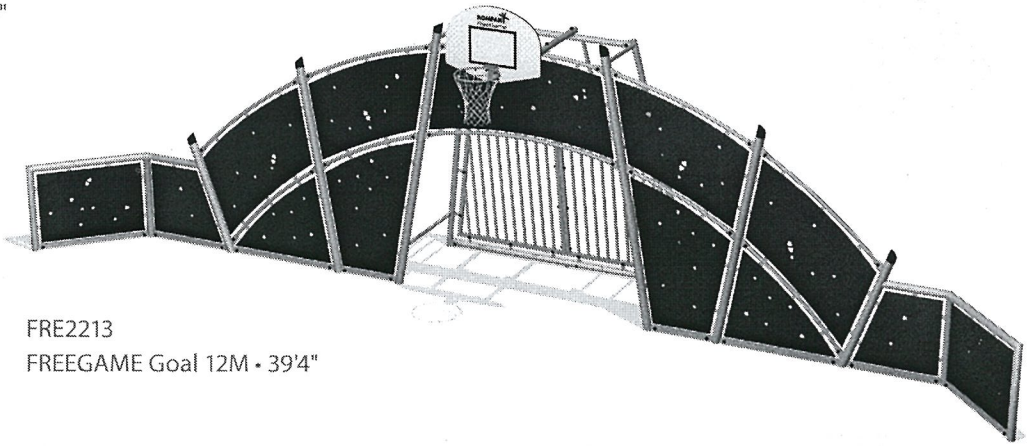

FRE2213
FREEGAME Goal 12M • 39'4"

BEACON HILL PARK, ADDENDUM 1, ATTACHMENT "K", 2 PGS

Product development is an ongoing process. For this reason we reserve the right to make modifications in the form of product improvements on all our products. This product may not be mirrored, scaled or altered in any way.

FRE2211 - FREEGAME GOAL

IN-GROUND FOOTINGS DETAIL

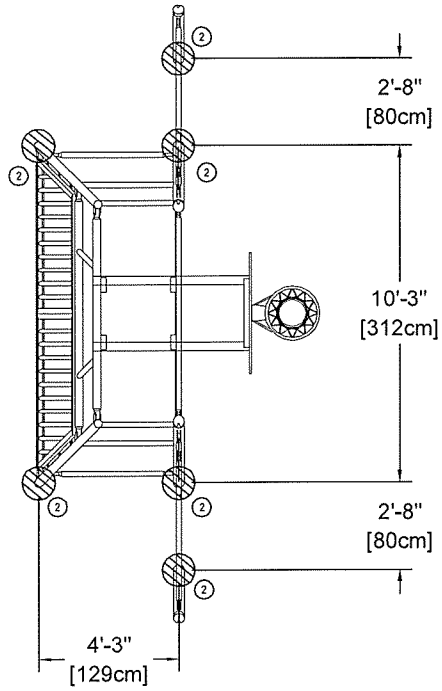

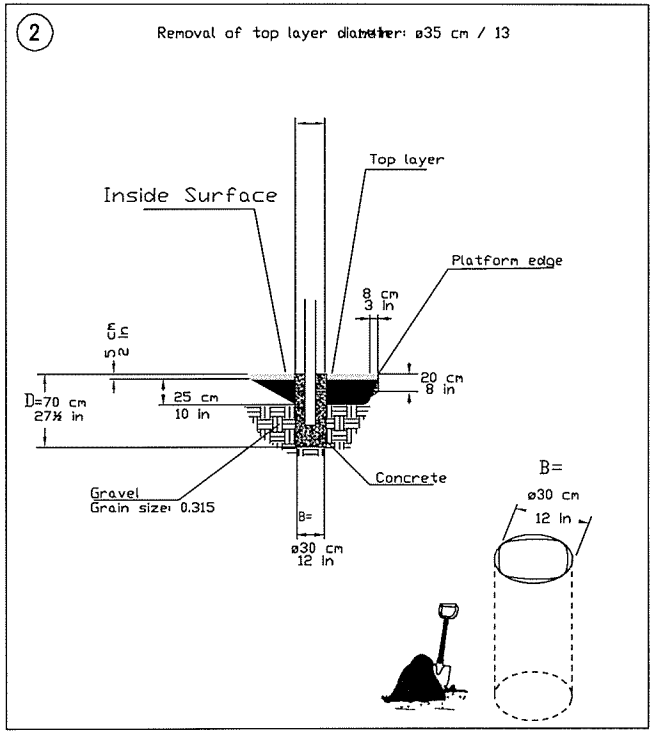

NOT TO SCALE

—— Instruction Manual ——

BA871, BA872

Ultimate Playground Basketball System Instructions

Customer Service
(800) 247-7668

PARTS LIST					
Item	**Qty**	**Description**	**Item**	**Qty**	**Description**
A	1	Vertical Pole	I	1	BA47/47A/47P Backboard (2 req'd on Model BA872)
B	1	Extension Arm (2 req'd on Model BA872)	J	1	BA39U/BA39UZC Rim (2 req'd on Model BA872)
C	1	Mounting Plate (Not req'd on Model 872)	K	1	Rim Mounting Hardware (included with BA39U/ BA39U-GV)
D*	6	5/8" x 8" Hex Bolts	L*	2	7/16" x 1-1/4" Carriage Bolt (4 req'd on Model BA872)
E*	6	5/8" Hex Nuts	M*	2	7/16" Flat Washers (4 req'd on Model BA872)
F*	6	5/8" D-Shape Flat Washers	N*	2	7/16" Lock Washers (4 req'd on Model BA872)
G*	6	5/8" Lock Washers	O*	2	7/16" Hex Nuts (4 req'd on Model BA872)
H*	8	3/8" x 1-1/2" Spring Pins	P	1	Pole Cap
* Stainless Steel on BA871 and BA872 Coastal System					

Warning!!!
The *Extension Arm* is EXTREMELY heavy!
Stay Away from the area Below the *Extension Arm/Backboard* while installing or adjusting!
Serious injury or death may occur.

- To eliminate the possibility of vandals loosening the extension arm clamp bolts, distort the threads with a hammer and chisel when installation is complete.
- Inspect all contents prior to installation. Report any missing parts to dealer immediately.
- Read all instructions before proceeding.

TOOLS/MATERIALS REQUIRED	
2 each 15/16" Wrench	1 each Post Hole Digger
2 each 5/8" Wrench	1 each Carpenters Level
2 each 9/16" Wrench	1 each Step Ladder
1 each Tape Measure	9-10 each Pre-Mix Concrete Bags (1/3 Cubic Foot Bags)
Bracing Materials	

Date: 7.2.02 Rev: 6 B.A. N.J.C. File: Bisonserver\publisher\instructions\BA871 Ref#: 930153

1. Position the *Vertical Pole* (A) taking into consideration that the *BA47 Backboard* (I) will be approximately 5' from the front of the *Vertical Pole* (A). Dig a 12" minimum diameter by 48" deep hole. It is advisable to bell out the bottom of the hole about 4" larger in diameter. A larger diameter hole is always better than a hole that is not large enough.

2. Make sure that you have the following tools available prior to pouring the concrete footing: a level, a broomstick or similar pole, bracing materials, and a tape measure. If you have made your hole larger than 12" Dia. x 48" deep, than you will require more concrete. Having enough concrete before you start will ensure proper strength of the footing.

3. Mix concrete according to instructions on the bag. It is advantageous to have the mixture be "wet". This will increase your working time and allow the batches to mix in the hole. Pour the hole full to ground level. Insert the broomstick into the wet concrete and agitate up and down, REPEAT SEVERAL TIMES. Insert the *Vertical Pole* (A) into the concrete while continuing to agitate broomstick to ensure the mixture fills in good around the *Vertical Pole* (A). Make sure that at least 100" of pole extends above desired playing surface to ensure official 10'-0" playing height. (Approximately to decal on pole, **see illustration**.) Clean excess concrete off of the *Vertical Pole* (A) with a damp towel and smooth the top of the footing. Level the *Vertical Pole* (A) and apply bracing materials to support while concrete cures.

4. Install 4 (four) *Spring Pins* (H) in *Mounting Plate* (C) so that they are flush with the back side of the *Mounting Plate* (C). Install 4 (four) *Spring Pins* (H) in the *Mounting Plate* (C) on the *Extension Arm* (B) with the *Spring Pins* (H) flush to the *Backboard* (I) side. These *Spring Pins* (H) are essential to the alignment of the *Extension Arm* (B) to the *Vertical Pole* (A). Spring pins will be pre-installed in "Hot-Dip" Galvanized poles.

5. After allowing 48 hours curing time for the concrete, mount the *Extension Arm* (B) as shown using hardware provided. The *Extension Arm* (B) can be loosely mounted at the ground level and raised to correct height depending on equipment availability.

WARNING! EXTENSION ARM IS EXTREMELY HEAVY! STAY AWAY FROM THE AREA BELOW THE EXTENSION ARM/BACKBOARD WHILE INSTALLING OR ADJUSTING. SERIOUS INJURY OR DEATH MAY OCCUR.

6. Install the *Model BA47 Backboard* (I) over the top lip on the *Extension Arm* (B) and attach the *BA47 Backboard* (I) to arm with the 7/16" hardware provided (M)(N)(O). Finger tighten only.

7. Install the *Model BA39U Rim* (J) using the hardware provided with it.

8. Tighten all bolts making sure the *Model BA39U Rim* (J) is at the desired height.

9. Install the *Pole Cap* (P).

10. To eliminate possible loosening of the extension arm bolts by vandals, which could cause serious injury or death, distort the thread on the six *5/8" x 8" Hex Bolts* (D) with a chisel and hammer

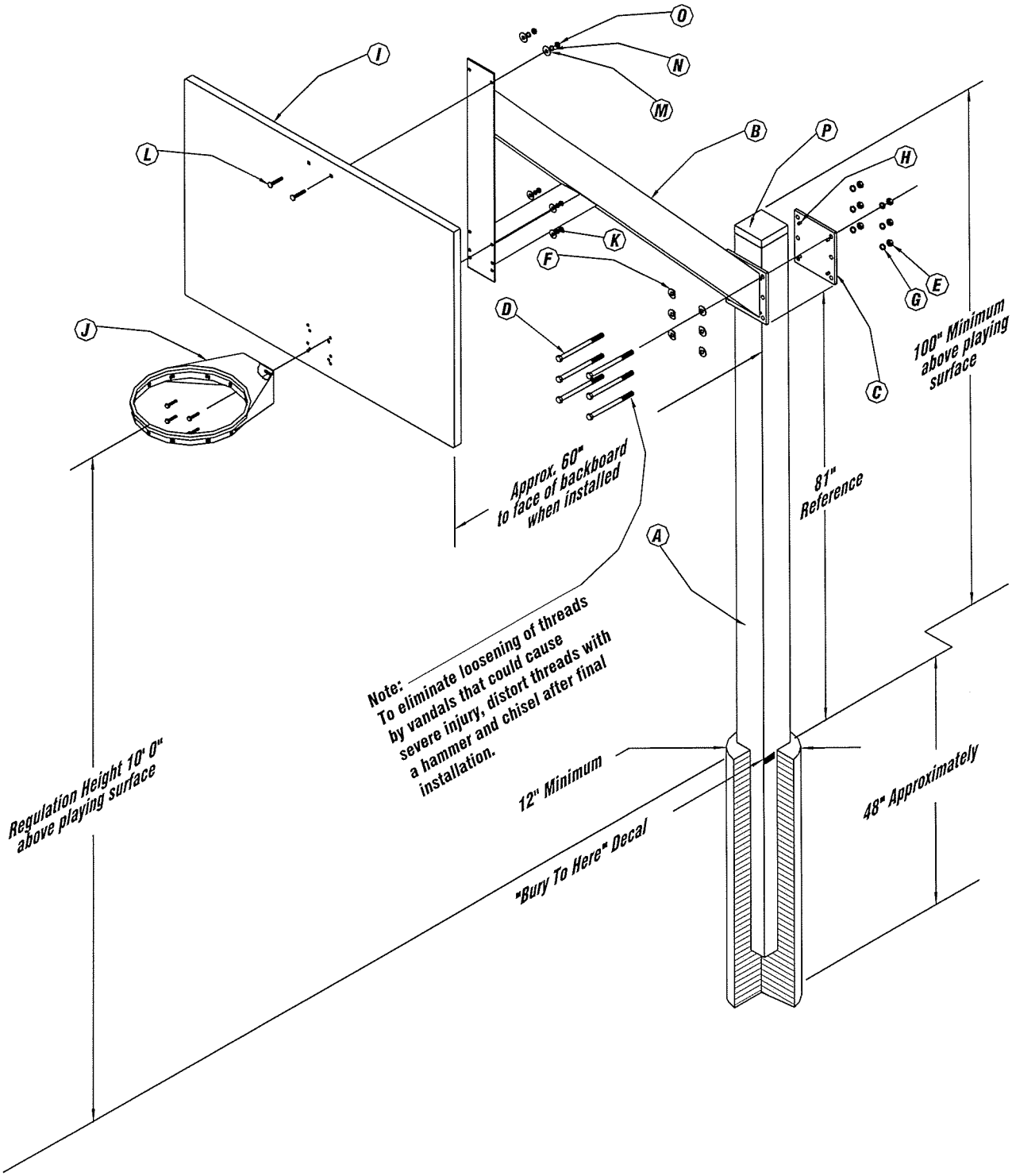
O
N
M
I
L
B
P
H
K
F
E
G
D
J
C
100" Minimum above playing surface
Approx. 60" to face of backboard when installed
81" Reference
A
Note: To eliminate loosening of threads by vandals that could cause severe injury, distort threads with a hammer and chisel after final installation.
Regulation Height 10' 0" above playing surface
12" Minimum
48" Approximately
"Bury To Here" Decal

HighLight™ series

ML-80

HighLight ML-80 as the premier LED solar illumination technology in its class today.
540 to 648 Ultra-bright High Intensity LED lighting means a total lighting solution for any need.
Whether the goal is large area or mid-size roadway clarity, our intense and bright, full-spectrum lighting HighLight ML-80 brings solar lighting performance and sustainability to the next level.

Key features:

- Compact "all in one DIY design" for easy and safe self-installation
- Ultra-bright homogeneous LED light distribution
- Strong, weather-proof housing design
- Vandal resistant
- Recommended installation height of 30ft (9m)

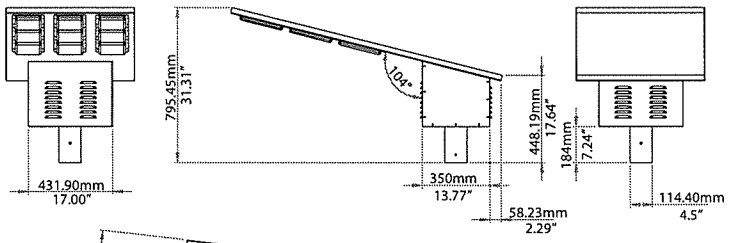

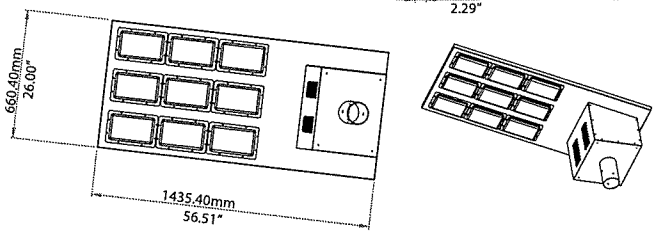

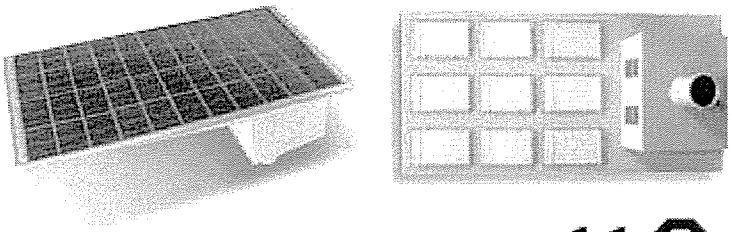

www.solarpathusa.com

Legal Clarification: All technical information and/or products listings and/or technical support, and/or any kind of graphics, illustrations and/or instructions and/or the names, trade names, trademarks, trade symbols, service marks, logos, icons and trade dress of SolarPath Inc or in connection to SolarPath Inc or any of its selling products, contained herein is in the exclusive ownership of SolarPath Inc and may not be alternated and/or used in any manner including but not limited to copy of some or all of the said material by users and/or viewers or any third party for that matter of this document and the website to which it is linked without the express prior written permission of SolarPath Inc. Furthermore, redistribution or any kind of commercial use or alternation or any kind of use other then downloading presented information in some or all contents of downloadable documents, and/or downloadable contents, is strictly prohibited without express written prior permission. All information set out herein is subject to changes as may occur from time to time. SolarPath Inc is not responsible for, and cannot guarantee and shall not be held liable for any information or the accuracy of such in websites that it does not manage.

Uses and Applications Guide	
Mid-size roads	●
Streets lighting	●
Parking lots	●
Boardwalks	●
Farms	●
Public parks	●
Private gardens	●
Access roads	●
Walking paths	●
Bus stations	●

ML-80 Technical specifications			
Lighting and Operation			
Lighting Technology	540/648 x Ultra-bright LEDs White OR "Warm white"		
Brightness (lumens at scotopic vision)	3,742 lumens		
On/Off operation	Automatic day/night detection, operates at dark/night only. Optional activation by sensors, push-button, computer, wireless receiver and the like		
Operation time	Up to 72 hours (per charge cycle)		
Energy Collection and Storage			
Solar panel type	Mono Crystalline Silicon, 130W		
Battery type	Deep Cycle AGM / Gel-Cell		
Voltage / Current	12VDC 65AH		
Materials			
Body	Stainless steel and Aluminum		
LED bank lens	UV-treated polycarbonate reflector		
Dimensions and Weight			
Dimensions (Main body)	**Length**	**Width**	**Height**
	55.86"	25.98"	23.62"
	1410mm	660mm	600mm
Dimensions (Pole mount diameter)	**Inner**	**Outer**	
	4.24"	4.50"	
	107.60mm	114.40mm	
Unit weight	Net: 140lbs / 63.7kg For shipping: 158lbs / 72kg		
Optional Features			
Enhanced brightness	Available option		
Wide angle light spread	Available option		
220V/110V AC Hybrid	Available option		
Wind turbine hybrid	Available option		
Winter mode	Available option		
Other			
Warranty period	2 Years fixture warranty (not including batteries)		

Contact your local SolarPath Sun Solutions representative below:

SolarPath Inc. 123 Town Square Pl. #333 Jersey City, NJ 07310 USA US: +1.888.333.SOLAR(7652) Intl.: +1.201.490.4499 contact@solarpathusa.com

HighLight™ series ML-80

HighLight ML-80 as the premier LED solar illumination technology in its class today. 540 to 648 Ultra-bright High Intensity LED lighting means a total lighting solution for any need.
Whether the goal is large area or mid-size roadway clarity, our intense and bright, full-spectrum lighting HighLight ML-80 brings solar lighting performance and sustainability to the next level.

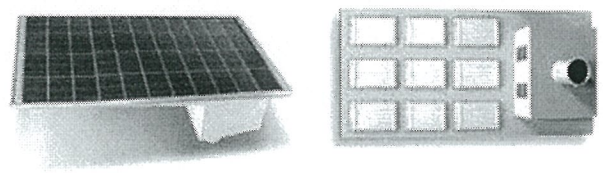

Key features:

- Compact "all in one DIY design" for easy and safe self-installation
- Ultra-bright homogeneous LED light distribution
- Strong, weather-proof housing design
- Vandal resistant
- Recommended installation height of 30ft (9m)

Uses and Applications Guide

Mid-size roads	●
Streets lighting	●
Parking lots	●
Boardwalks	●
Farms	●
Public parks	●
Private gardens	●
Access roads	●
Walking paths	●
Bus stations	●

Technical Specifications

Lighting and Operation	
Lighting Technology	540/648 x Ultra-Bright LEDs White OR "Warm white"
Brightness (lumens at scotopic vision)	3,742 lumens
On/Off operation	Automatic day/night detection, operates at dark/night only. Optional activation by sensors, push-button, computer, wireless receiver and the like.
Operation time	Up to 72 hours (per charge cycle)
Energy Collection and Storage	
Solar panel type	Mono Crystalline Silicon, 130W
Battery type	Deep Cycle AGM / Gel-Cell
Voltage / Current	12VDC sized according to geographical location
Materials	
Body	Stainless Steel and Aluminum
Dimensions (Main body)	L 55.86" W 25.98" H23.62"/L 1410mm W 660mm H600mm
Dimensions (Pole mount diameter)	Inner: 4.24" / 107.6mm Outer: 4.5" / 114.4mm
Unit weight	Net: 140lbs/63.7kg Packed: 158lbs/72kg
EPA	2.098
Optional Features	
Enhanced brightness	Available option
Wide angle light spread	Available option
220V/110V AC Hybrid	Available option
Wind turbine hybrid	Available option
Winter mode	Available option
Other	
Warranty period	2 Years fixture warranty (not including batteries)

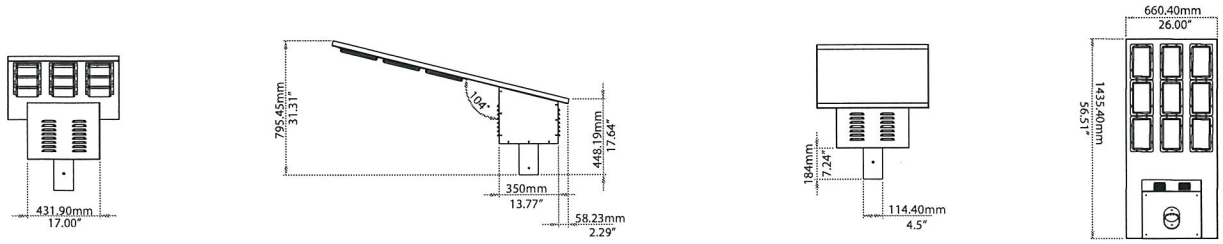

Contact your local SolarPath Sun Solutions representative below:

Legal Clarification: All technical information and/or products listings and/or technical support, and/or any kind of graphics, illustrations and/or instructions and/or the names, trade names, trademarks, trade symbols, service marks, logos, icons and trade dress of SolarPath Inc or in connection to SolarPath Inc or any of its selling products, contained herein is in the exclusive ownership of SolarPath Inc and may not be alternated and/or used in any manner including but not limited to copy of some or all of the said material by users and/or viewers or any third party for that matter of this document and the website to which it is linked without the express prior written permission of SolarPath Inc. Furthermore, redistribution or any kind of commercial use or alternation or any kind of use other then downloading presented information in some or all contents of downloadable documents, and/or downloadable contents, is strictly prohibited without express written prior permission. All information set out herein is subject to changes as may occur from time to time. SolarPath Inc is not responsible for, and cannot guarantee and shall not be held liable for any information or the accuracy of such in websites that it does not manage.

Design
The selection of the correct pole design is predicated on the specific loading requirements of each application. The poles located in the steel pole chart are designed to withstand dead loads and theoretical dynamic loads developed by sustained winds of 80 MPH through 100 MPH times the 1.3 gust factor. The combined EPA and the weight of the luminaire, light support brackets, and any other attachments cannot exceed the rated EPA or allowable weight on that pole.

Welding
All welds shall be of the highest quality and performed by American Welding Society certified welders conforming to the latest version of the American Welding Society specification AWS D1.1.

Finish
All poles and mounting brackets are furnished with a coating of either red oxide/zinc primer, factory painted, powder coated or hot-dip galvanized in accordance with ASTM A-123. Miscellaneous hardware will be galvanized to ASTM A-153. Exterior finish top-coatings are available by request.

Ordering Logic

RTS - 30 - 90 - 11 - AB - PCDB - DM28 - BC

Series

RTS	-	Round Tapered Steel
RNS	-	Round Non-tapered Steel
SNS	-	Square Non-tapered Steel
STS	-	Square Tapered Steel
SNSHG	-	Square Non-tapered Steel (Hinged)
STSHG	-	Square Tapered Steel (Hinged)

Height

10 = 10 ft
20 = 20 ft
30 = 30 ft
Etc...

Base Dia.

66 = 6.6 in
70 = 7.0 in
90 = 9.0 in
Etc...

Wall Thick

11 = 0.1196 in
7 = 0.1793 in
3 = 0.2391 in

Base Design

AB = Anchor Base
DE = Embedded
LAB = Less Anchor Bolts

Finish

G	-	Galvanized
PC	-	Powder Coat
GP	-	Galvanized & Paint
P	-	Primed

Colors
DB = Dark Bronze
BL = Black
WH = White
GR = Gray
SP = Special

Fixture Mount

DM19	-	Drill One @ 90°
DM28	-	Drill Two @ 180°
DM32	-	Drill Three @ 120°
DM39	-	Drill Three @ 90°
DM49	-	Drill Four @ 90°
T20R	-	Tenon Round 2⅞ O.D.
T25R	-	Tenon Round 2⅞ O.D.
T30R	-	Tenon Round 3½ O.D.

Options

BC	=	Base Cover (Plastic)
SBC	=	Base Cover (Steel)
NC	=	Nut Covers
FES	=	Festoon Box
DMP	=	Vibration Damper

Custom designs and aluminum poles are also available. Please contact factory for details.

BEACON HILL PARK, ADDENDUM 1, ATTACHMENT "N", 2 PGS

American LitePole

Phone: (866) 474-7200 • Fax: (817) 924-7049

American Lite Pole reserves the right to change any portion of this publication without notice in order to promote product improvement and allow for material availability.

Area Lighting Poles - Square Non-Tapered

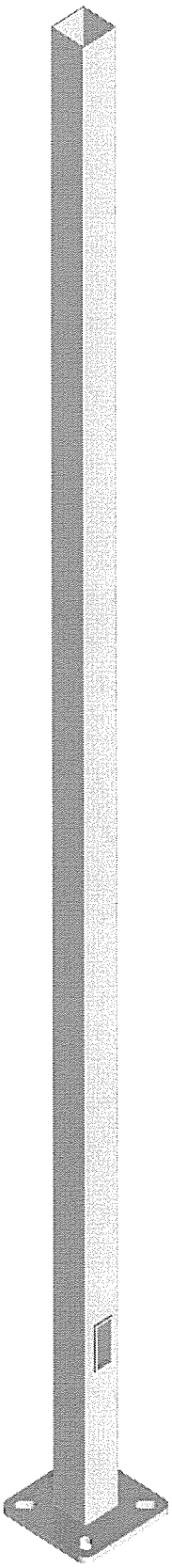

Catalog Number	Pole Height (ft)	Weight (lbs)	Guage	Shaft Size (in)	Base Plate Width (in)	Bolt Circle Dia. (in)	Anchor Bolts (in)		Max Loading Capacities					
									80 (mph)		90 (mph)		100 (mph)	
							Dia x Len x Hook	Projection min / max	EPA (ft^2)	Wt. (lbs)	EPA (ft^2)	Wt. (lbs)	EPA (ft^2)	Wt. (lbs)
SNS-10-40-11-AB	10	75	11	4.0	8.25	8.0 - 9.0	0.75 x 17 x 3	4.00 / 5.00	30.6	765	23.8	595	18.9	472
SNS-15-40-11-AB	15	115	11	4.0	8.25	8.0 - 9.0	0.75 x 17 x 3	4.00 / 5.00	17.2	430	13.2	330	10.0	250
SNS-20-40-11-AB	20	140	11	4.0	8.25	8.0 - 9.0	0.75 x 17 x 3	4.00 / 5.00	9.6	240	6.7	167	4.5	112
SNS-20-40-7-AB	20	185	7	4.0	8.25	8.0 - 9.0	0.75 x 17 x 3	4.00 / 5.00	15.0	375	11.0	275	9.0	225
SNS-20-50-11-AB	20	185	11	5.0	11	10 - 12	0.75 x 17 x 3	4.00 / 5.00	17.7	442	12.7	317	9.4	235
SNS-25-40-11-AB	25	170	11	4.0	8.25	8.0 - 9.0	0.75 x 17 x 3	4.00 / 5.00	4.8	120	2.6	65	1.0	25
SNS-25-40-7-AB	25	245	7	4.0	8.25	8.0 - 9.0	0.75 x 17 x 3	4.00 / 5.00	10.8	270	7.7	192	5.4	135
SNS-25-50-11-AB	25	225	11	5.0	11	10 - 12	0.75 x 17 x 3	4.00 / 5.00	9.8	245	6.3	157	3.7	92
SNS-25-50-7-AB	25	360	7	5.0	11	10 - 12	0.75 x 17 x 3	4.00 / 5.00	18.5	462	13.3	3332	9.5	237
SNS-30-40-7-AB	30	291	7	5.0	8.25	8.0 - 9.0	0.75 x 17 x 3	4.00 / 5.00	6.7	167	4.4	110	2.6	65
SNS-30-50-11-AB	30	265	11	5.0	11	10 - 12	0.75 x 17 x 3	4.00 / 5.00	4.7	117	2.0	50	--	--
SNS-30-50-7-AB	30	380	7	5.0	11	10 - 12	0.75 x 17 x 3	4.00 / 5.00	10.7	267	6.7	167	3.9	97
SNS-30-60-7-AB	30	520	7	6.0	12.5	11 - 13	1 x 36 x 4	4.75 / 5.75	19.0	475	13.2	330	9.0	225
SNS-35-50-7-AB	35	440	7	5.0	11	10 - 12	0.75 x 17 x 3	4.00 / 5.00	5.9	147	2.5	62	--	--
SNS-35-60-7-AB	35	540	7	6.0	12.5	11 - 13	1 x 36 x 4	4.75 / 5.75	12.4	310	7.6	190	4.2	105
SNS-39-60-7-AB	39	605	7	6.0	12.5	11 - 13	1 x 36 x 4	4.75 / 5.75	7.2	180	3.0	75	--	--

Pole Shaft
The pole shall be a one section design fabricated from standard 11 gauge (0.1196") or 7 gauge (0.1793") steel. Each section shall be fabricated from high strength low alloy steel conforming to ASTM A500 Grade B, with minimum yield strength of 46,000 psi. Each pole will have a full-length longitudinal weld and will be square in cross-section.

Base Plate
The base plate is fabricated from a structural quality hot rolled carbon steel plate that meets or exceeds ASTM A-36 with a minimum yield of strength of 36,000 psi. The base plate telescopes the pole shaft and is circumferential welded top and bottom. The base plate has slotted bolt holes.

Hand Hole
A reinforced hand hole, having a nominal 3" x 5" opening, will be installed 18" above the base plate on all poles. A hand hole cover and attaching hardware is included with each hand hole assembly. A ground lug will be welded either on the hand hole frame or on the inside of the pole opposite the hand hole depending on the design.

Anchor Bolts
Anchor bolts are fabricated from a commercial quality hot rolled carbon steel bar that meets or exceeds minimum yield strength of 55,000 psi. Anchor bolts are sized according to each pole design and are furnished with 2 galvanized heavy hex nuts and 2 galvanized flat washers. Anchor bolts shall be galvanized a minimum of 4" on the threaded end in accordance with ASTM A-153. Anchor bolts will ship with the poles unless otherwise specified.

Pole Top
Each pole will be side-drilled with a removable pole cap or have a 2-3/8" O.D. x 4" tenon top (other sizes available).

Welding
All welds shall be of the highest quality and performed by American Welding Society certified welders conforming to the latest version of the American Welding Society specification AWS D1.1.

Finish
All poles, mounting brackets and platforms are furnished with a coating of either red oxide/zinc primer, factory painted, powder coated or hot-dip galvanized to ASTM A-123. Miscellaneous hardware will be galvanized to ASTM A-153. Exterior finish coatings are available by request.

Note
Anchor bolt patterns are subject to change. Please consult factory prior to construction.

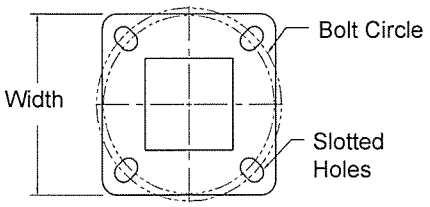

Base Plate

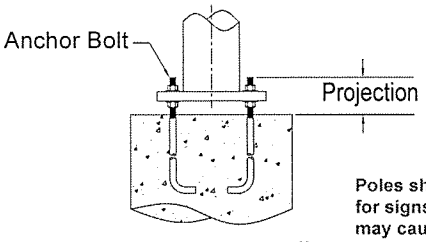

Base Detail

Poles should be monitored frequently for signs of harmonic vibration, which may cause structural fatigue. Consult factory for a damping device that can help minimize the effects of vibration.

copyright 1971-2011 RVK, Inc.

PET WASTE DISPOSABLE BAG DISPENSER, POST AND SIGN:

POST: #1302, 4' GALVANIZED TELESCOPING POST AND RAIN CAP

DISPENSER: #1002, .08 POWERCOATED ALUMINUM DISPENSER W/ EXTRA SET OF KEYS

SIGN: PET SIGN, 12" X 18" ALUMINUM

INSTALL PER MANUFACTURER'S INSTRUCTIONS. POST TO BE SET IN CONCRETE.

ADD#1

2
L1.9

PET WASTE BAG DISPENSER

OR APPROVED EQUAL

attachment "S"

RVK

addendum no. 1

Beacon Hill Linear Park

san antonio, texas

project #: 09076.D
date: 02/23/2011

Pet waste Bag Dispenser - 2/L1.9

scale: not to scale

REGISTERED LANDSCAPE ARCHITECT
LARRY A. HICKS
910
STATE OF TEXAS
2/23/11

web: www.rvk-architects.com
address: 745 e mulberry ave suite 601 san antonio texas 78212
architecture interior design landscape architecture
telephone: 210.733.3535

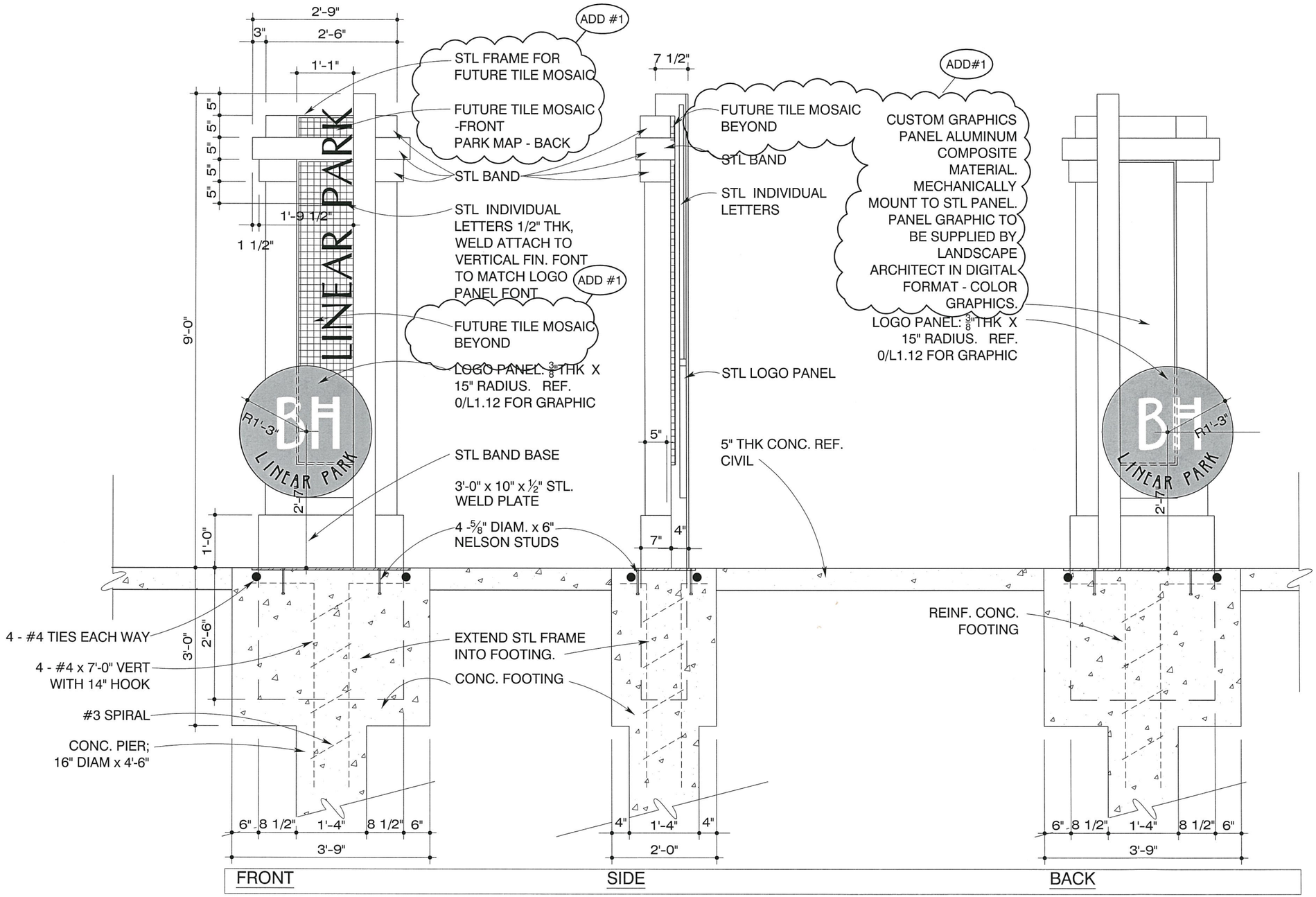

NOTES:

1. REFER TO SIGN PLAN L1.11 FOR LOCATIONS AND SPECIFIC SIGN TITLES.
2. STEEL SIGN COMPONENTS TO BE SHOP FABRICATED AND SHOP PRIMED AND PAINTED APPROVED BY THE LANDSCAPE ARCHITECT. CONTRACTOR TO SUBMIT SHOP DRAWINGS FOR APPROVAL.
3. VINYL LETTERING GRAPHICS TO BE REFLECTIVE, MFR. BY 3M OR APPROVED EQUAL. SUBMIT ALL GRAPHICS AS SHOP DRAWINGS FOR APPROVAL.
4. MOSAIC PANELS AND COMPONENTS TO BE SHOP FABRICATED AND INSTALLED ON SITE. PANEL DESIGN, MATERIALS AND CONNECTIONS TO BE SUBMITTED AS SHOP DRAWINGS FOR APPROVAL. COORDINATE WITH SIGN MANUFACTURER.
5. ALL WELDS SHALL BE CONTINUOUS AND GROUND SMOOTH. NO "BUBBLE GUM" TYPE WELD ALLOWED.
6. TILE MOSAIC AND BACKING BOARD TO BE FIELD INSTALLED BY OTHERS.

ADD#1

1 / L1.12

SIGN TY 1 - BEACON

1/2" = 1'-0" QTY: 1

REGISTERED LANDSCAPE ARCHITECT LARRY A. HICKS 910 STATE OF TEXAS
telephone: 210.733.3535

attachment "T"

addendum no. 1

Beacon Hill Linear Park Phase One

san antonio, texas

project #: 09076.D
date: 02/23/2011

sign ty 1 - Beacon - 1/L1.12

scale: 1/2" = 1'-0"

address: 745 e mulberry ave suite 601 san antonio texas 78212
architecture interior design landscape architecture
web: www.rvk-architects.com

copyright 1971-2011 RVK, Inc.

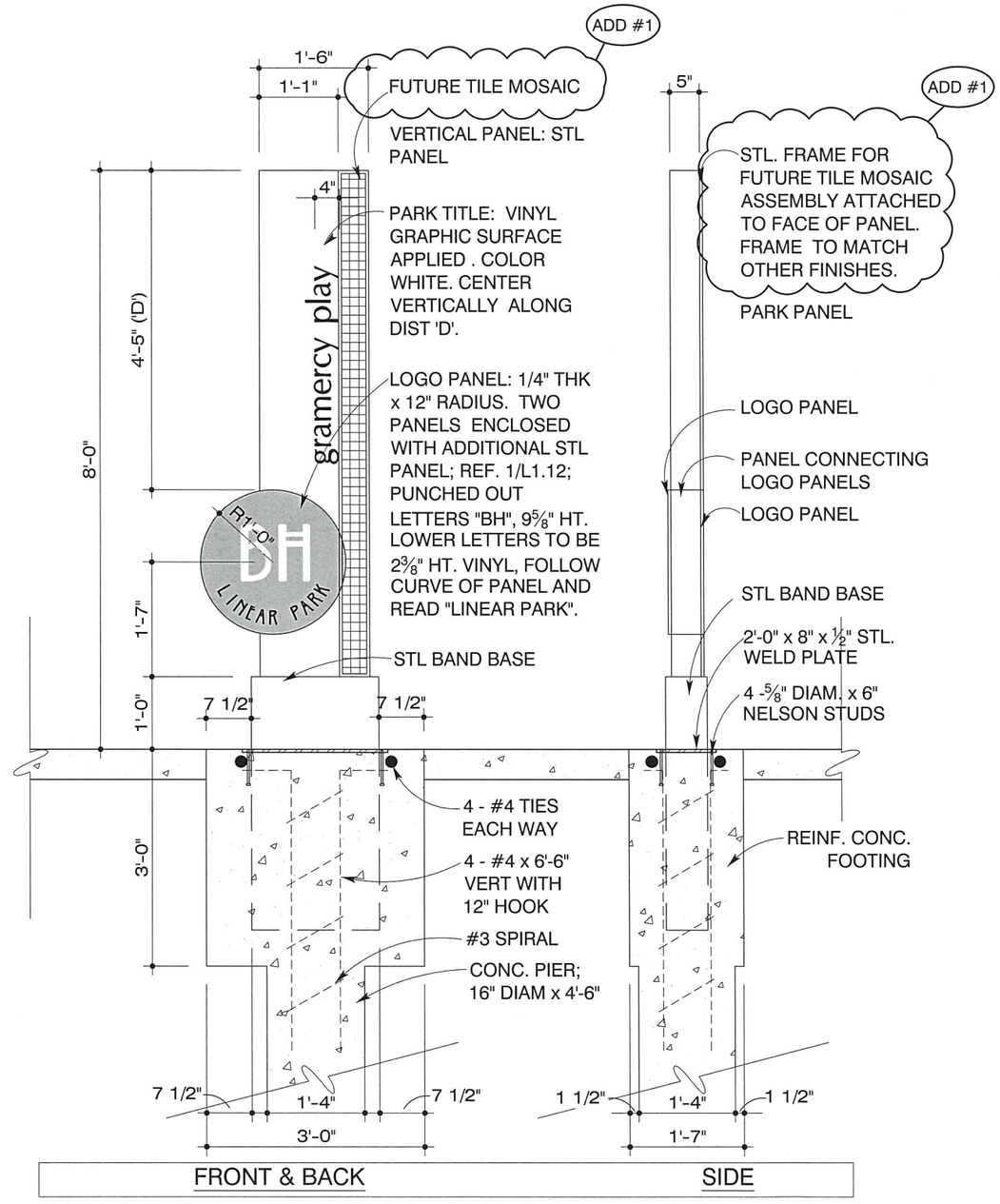

NOTE: REFER TO NOTES OF DETAIL 1/L1.12

2
L1.12

SIGN TY 2 - PARK

1/2" = 1'-0" QTY: 6

copyright 1971-2011 RVK, Inc.

REGISTERED LANDSCAPE ARCHITECT
LARRY A. HICKS
919
STATE OF TEXAS

telephone: 210.733.3535

attachment "U"

addendum no. 1

Beacon Hill Linear Park Phase One

san antonio, texas

project #: 09076.D
date: 02/23/2011

sign ty 2 - Park - 2/L1.12

scale: 1/2" = 1'-0"

RVK

address: 745 e mulberry ave suite 601 san antonio texas 78212
web: www.rvk-architects.com

architecture interior design landscape architecture

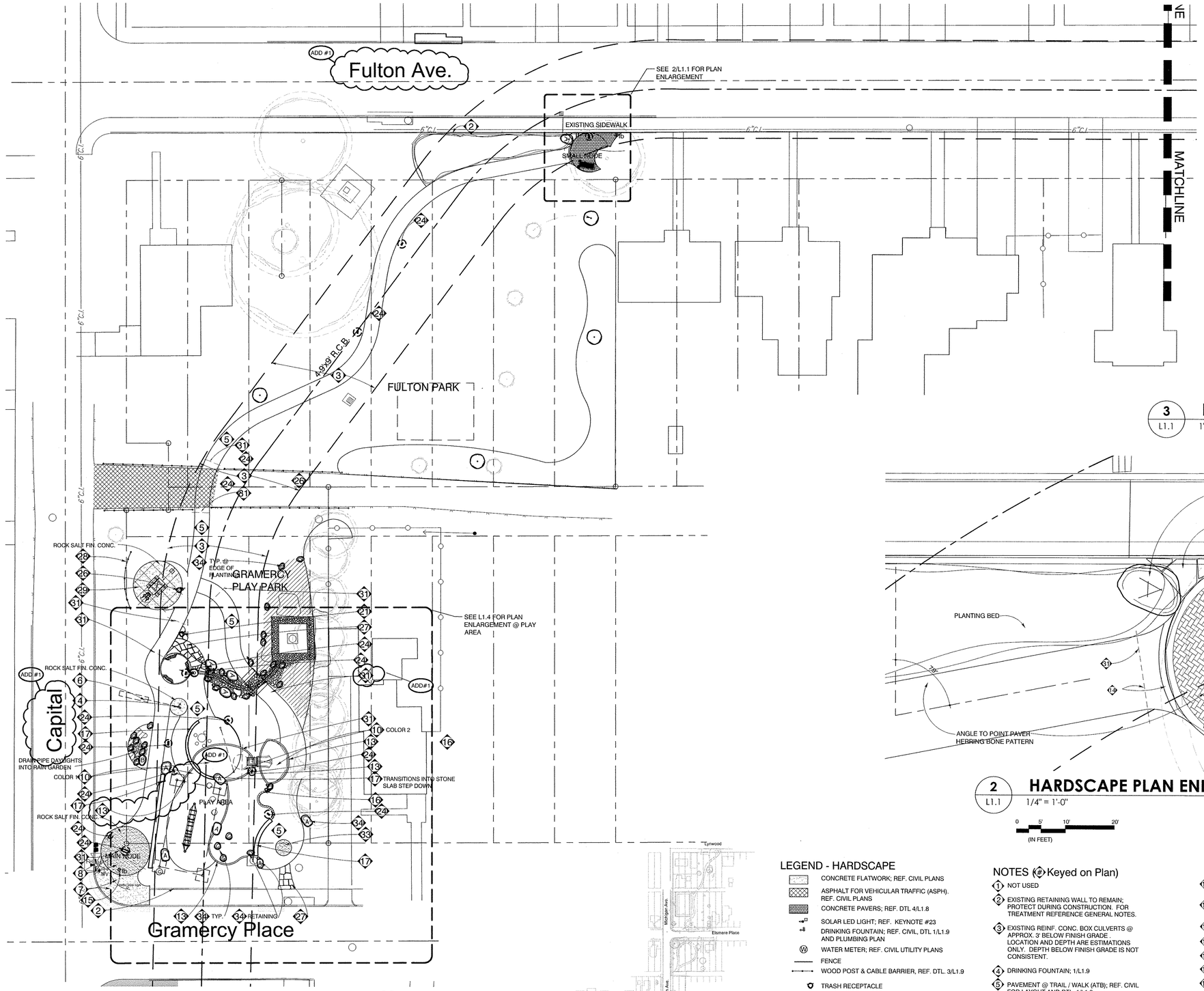

1 HARDSCAPE PLAN
L1.1 — 1" = 20'-0"

0 10' 20' 40'
(IN FEET)

4 LOCATION MAP
L1.1 — 1" = 200'-0"

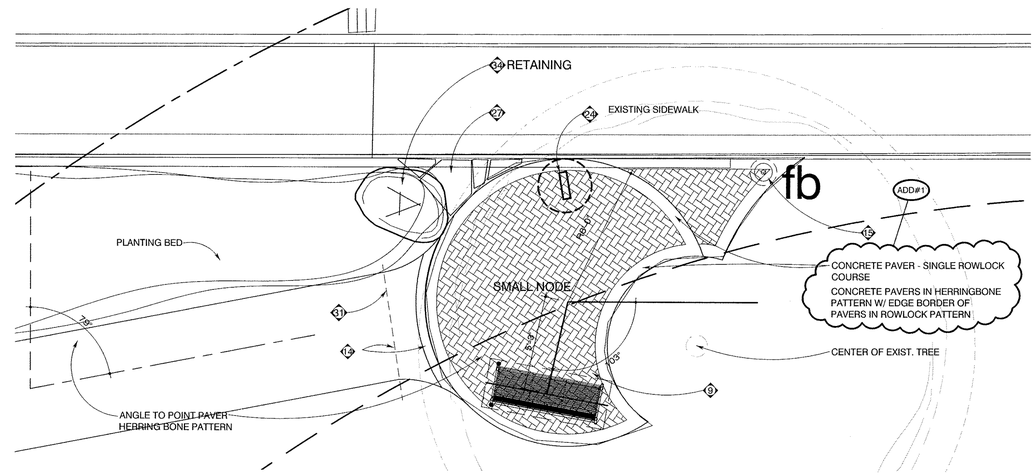

2 HARDSCAPE PLAN ENLARGEMENT
L1.1 — 1/4" = 1'-0"

0 5' 10' 20'
(IN FEET)

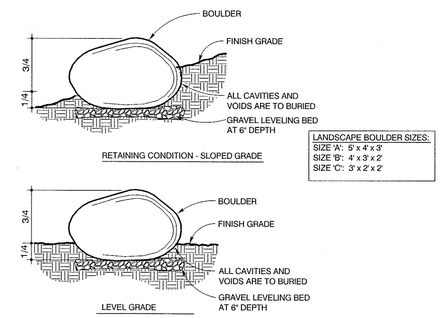

LANDSCAPE BOULDER SIZES:
SIZE 'A': 5' x 4' x 3'
SIZE 'B': 4' x 3' x 2'
SIZE 'C': 3' x 2' x 2'

NOTES:
1. ALL BOULDERS SET @ LEVEL GRADE UNLESS OTHERWISE NOTED ON PLAN.
2. BOULDERS SIZE 'A' AND 'B' ARE TO INCLUDE ONE SMOOTH FACE TO SERVE AS SEATING. SMOOTH FACE SHALL BE SET TO FACE UP.
3. BOULDERS IN CLUSTERS ARE TO BE SET AT VARIED ANGLES.

3 LANDSCAPE BOULDER PLACEMENT
L1.1 — 1" = 10'-0"

LEGEND - HARDSCAPE

- CONCRETE FLATWORK; REF. CIVIL PLANS
- ASPHALT FOR VEHICULAR TRAFFIC (ASPH). REF. CIVIL PLANS
- CONCRETE PAVERS; REF. DTL 4/L1.8
- SOLAR LED LIGHT; REF. KEYNOTE #23
- DRINKING FOUNTAIN; REF. CIVIL, DTL 1/L1.9 AND PLUMBING PLAN
- WATER METER; REF. CIVIL UTILITY PLANS
- FENCE
- WOOD POST & CABLE BARRIER, REF. DTL. 3/L1.9
- TRASH RECEPTACLE
- BENCH
- PET WASTE STATION
- fb FIXED BOLLARD
- A LANDSCAPE/ SEAT BOULDER SIZE 'A'; REF. DTL 3/L1.1
- B LANDSCAPE/ SEAT BOULDER SIZE 'B'; REF. DTL 3/L1.1
- C LANDSCAPE BOULDER SIZE 'C'; REF. DTL 3/L1.1
- BIOFILTRATION PLANTINGS; REF. PLANTING PLANS
- DESERT WASH CHANNEL; REF. DTL 4/L1.7
- DESERT WASH EDGE & RAIN GARDEN BASIN; REF DTLS 4/L1.7 AND 5/L1.7

NOTES (#) Keyed on Plan)

1. NOT USED
2. EXISTING RETAINING WALL TO REMAIN; PROTECT DURING CONSTRUCTION. FOR TREATMENT REFERENCE GENERAL NOTES.
3. EXISTING REINF. CONC. BOX CULVERTS @ APPROX. 3' BELOW FINISH GRADE . LOCATION AND DEPTH ARE ESTIMATIONS ONLY. DEPTH BELOW FINISH GRADE IS NOT CONSISTENT.
4. DRINKING FOUNTAIN; 1/L1.9
5. PAVEMENT @ TRAIL / WALK (ATB); REF. CIVIL FOR LAYOUT AND DTL. 1/L1.8
6. SUBGRADE DRY WELL; 1/L1.9
7. CONCRETE FLATWORK PER CIVIL
8. CONCRETE PAVEMENT; REF. DTL 3/L1.8
9. CONCRETE PAVERS OVER GEOGRID; REF. DTL 4/L1.8, 5/L1.8 AND 6/L1.8
10. POURED IN PLACE RUBBER SURFACING; REF. DTL 3/L1.7
11. CONCRETE CURB @ STREET; REF. CIVIL
12. CURB EXTENSION AT STREET ; REF. DTL 5/L1.3 & PLANTING PLANS
13. CONCRETE CURB @ PLAY AREA ; REF.DTL 3/L1.7
14. CONCRETE CURB @ PAVERS/ ATB JUNCTURE; REF. DTL 5/L1.8
15. FIXED BOLLARD; REF. DTL 9/L1.9
16. LOG WALL @ PLAY CAVE; REF. DTL 2/L1.6
17. STONE BLOCK WALL; REF. DTL 5/L1.6
18. NOT USED
19. BENCH; REF. DTL 6/L1.9
20. TRASH RECEPTACLE; REF. DTL 7/L1.9
21. RECYCLING RECEPTACLE; REF. DTL 8/ L1.9
22. 8' HT FENCE; REF. DTL 2/L1.10
23. SOLAR LIGHT WITH 25' HT POLE. REF. STRUCTURAL DRAWINGS FOR FOOTING
24. SIGN REF. SIGN PLAN L1.11
25. LOCATION FOR FUTURE BIKE RACK AND CONC. PAD. NOT IN THIS CONTRACT.
26. PET WASTE BAG DISPENSER ATTACHED TO TRASH RECEPTACLE; REF. DTL 2/L1.9
27. FIELD STONE PAVEMENT; REF. DTL 7/L1.8
28. WOOD POST AND CABLE BARRIER; REF. CIVIL FOR LAYOUT AND DTL 3/L1.9
29. PICNIC UNIT - INCLUDES SLAB, TABLE, TRASH & GRILL; REF. DTL 5/L1.5
30. SHADE SAIL SUPPORT COLUMN; REF. SHADE SAIL PLAN 1/L1.5
31. SLEEVE FOR FUTURE UTILITY; REF. DTL 6/IR1.2
32. PLANTING BED; REF. DTL 1/L1.6
33. CONCRETE STAGE WITH CHECKERBOARD PATTERN; REF. DTL 4/L1.5
34. LANDSCAPE BOULDER. SIZE PER PLAN GRAPHIC & DTL 3/L1.1. INSTALL PER DTL 3/L1.1.
35. TRAFFIC REFLECTOR BUTTON ADHERED TO BOULDER; REF. 6/L1.3

The user of this file agrees to assume all responsibility for any modifications to or use of this drawing file that is inconsistent with the requirements of the Rules and Regulations of the Texas Board of Architectural Examiners. Neither the printed document nor the digital media may be altered or amended without the express written permission of the named professional.

REGISTERED LANDSCAPE ARCHITECT — LARRY A. HICKS — 910 — STATE OF TEXAS — 2/23/11

RVK
Architects
Interior Designers
Landscape Architects

Capital Improvements Management Services
People — Build San Antonio — Process — Systems

San Antonio Parks and Recreation Department

Date:	Revisions/Submissions
2/23/11	Addendum #1

CITY OF SAN ANTONIO
CAPITAL IMPROVEMENTS MANAGEMENT SERVICES DEPARTMENT
VERTICAL PARKS DIVISION
MUNICIPAL PLAZA BUILDING 114 W. COMMERCE
P.O. BOX 839966 SAN ANTONIO, TX 78283-3966
TEL. (210) 207-2879 FAX (210) 207-2197

BEACON HILL LINEAR PARK - PHASE ONE
1406 MICHIGAN AVENUE
SAN ANTONIO, TEXAS
HARDSCAPE PLAN

L1.1

Designed By:	DAS & LAH
Drawn By:	ND & DAS
Date:	02/10/2011
Project No. :	09076.D
Filename:	$L1.1 TO L1.3.DWG

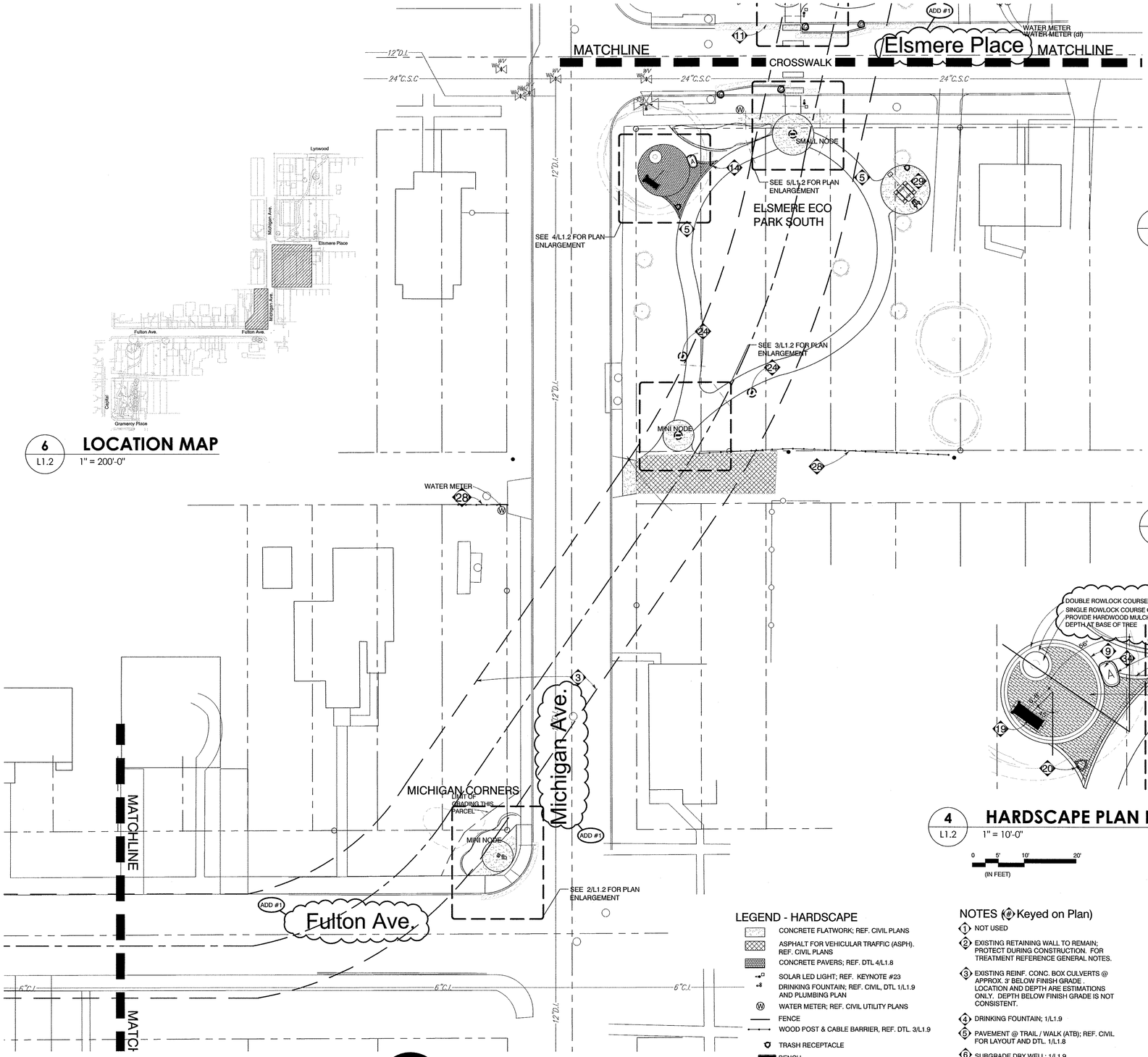

6 L1.2 **LOCATION MAP**
1" = 200'-0"

1 L1.2 **HARDSCAPE PLAN**
1" = 20'-0"
0 10' 20' 40' (IN FEET)

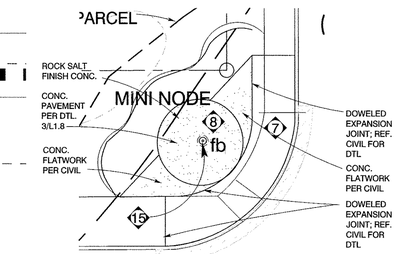

2 L1.2 **HARDSCAPE PLAN ENLARGEMENT**
1" = 10'-0"
0 5' 10' 20' (IN FEET)

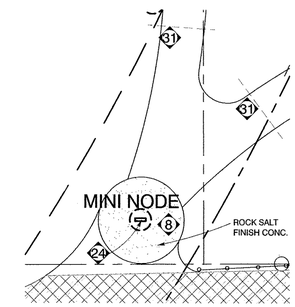

3 L1.2 **HARDSCAPE PLAN ENLARGEMENT**
1" = 10'-0"
0 5' 10' 20' (IN FEET)

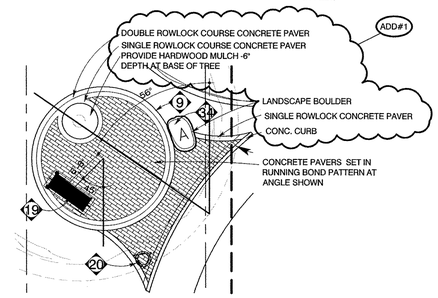

4 L1.2 **HARDSCAPE PLAN ENLARGEMENT**
1" = 10'-0"
0 5' 10' 20' (IN FEET)

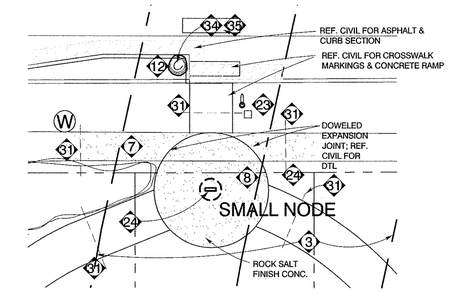

5 L1.2 **HARDSCAPE PLAN ENLARGEMENT**
1" = 10'-0"
0 5' 10' 20' (IN FEET)

LEGEND - HARDSCAPE

- CONCRETE FLATWORK; REF. CIVIL PLANS
- ASPHALT FOR VEHICULAR TRAFFIC (ASPH). REF. CIVIL PLANS
- CONCRETE PAVERS; REF. DTL 4/L1.8
- SOLAR LED LIGHT; REF. KEYNOTE #23
- DRINKING FOUNTAIN; REF. CIVIL, DTL 1/L1.9 AND PLUMBING PLAN
- (W) WATER METER; REF. CIVIL UTILITY PLANS
- FENCE
- WOOD POST & CABLE BARRIER, REF. DTL 3/L1.9
- TRASH RECEPTACLE
- BENCH
- PET WASTE STATION
- fb FIXED BOLLARD
- (A) LANDSCAPE/ SEAT BOULDER SIZE 'A'; REF. DTL 3/L1.1
- (B) LANDSCAPE/ SEAT BOULDER SIZE 'B'; REF. DTL 3/L1.1
- (C) LANDSCAPE BOULDER SIZE 'C'; REF. DTL 3/L1.1
- BIOFILTRATION PLANTINGS; REF. PLANTING PLANS
- DESERT WASH CHANNEL; REF. DTL 4/L1.7
- DESERT WASH EDGE & RAIN GARDEN BASIN; REF DTLS 4/L1.7 AND 5/L1.7

NOTES (#) Keyed on Plan)

1. NOT USED
2. EXISTING RETAINING WALL TO REMAIN; PROTECT DURING CONSTRUCTION. FOR TREATMENT REFERENCE GENERAL NOTES.
3. EXISTING REINF. CONC. BOX CULVERTS @ APPROX. 3' BELOW FINISH GRADE . LOCATION AND DEPTH ARE ESTIMATIONS ONLY. DEPTH BELOW FINISH GRADE IS NOT CONSISTENT.
4. DRINKING FOUNTAIN; 1/L1.9
5. PAVEMENT @ TRAIL / WALK (ATB); REF. CIVIL FOR LAYOUT AND DTL. 1/L1.8
6. SUBGRADE DRY WELL; 1/L1.9
7. CONCRETE FLATWORK PER CIVIL
8. CONCRETE PAVEMENT; REF. DTL 3/L1.8
9. CONCRETE PAVERS OVER GEOGRID; REF. DTL 4/L1.8, 5/L1.8 AND 6/L1.8
10. POURED IN PLACE RUBBER SURFACING; REF. DTL 3/L1.7
11. CONCRETE CURB @ STREET; REF. CIVIL
12. CURB EXTENSION AT STREET ; REF. DTL 5/L1.3 & PLANTING PLANS
13. CONCRETE CURB @ PLAY AREA ; REF.DTL 3/L1.7
14. CONCRETE CURB @ PAVERS/ ATB JUNCTURE; REF. DTL 5/L1.8
15. FIXED BOLLARD; REF. DTL 9/L1.9
16. LOG WALL @ PLAY CAVE; REF. DTL 2/L1.6
17. STONE BLOCK WALL; REF. DTL 5/L1.6
18. NOT USED
19. BENCH; REF. DTL 6/L1.9
20. TRASH RECEPTACLE; REF. DTL 7/L1.9
21. RECYCLING RECEPTACLE; REF. DTL 8/ L1.9
22. 8' HT FENCE; REF. DTL 2/L1.10
23. SOLAR LIGHT WITH 25' HT POLE. REF. STRUCTURAL DRAWINGS FOR FOOTING
24. SIGN REF. SIGN PLAN L1.11
25. LOCATION FOR FUTURE BIKE RACK AND CONC. PAD. NOT IN THIS CONTRACT.
26. PET WASTE BAG DISPENSER ATTACHED TO TRASH RECEPTACLE; REF. DTL 2/L1.9
27. FIELD STONE PAVEMENT; REF. DTL 7/L1.8
28. WOOD POST AND CABLE BARRIER; REF. CIVIL FOR LAYOUT AND DTL 3/L1.9
29. PICNIC UNIT - INCLUDES SLAB, TABLE, TRASH & GRILL; REF. DTL 5/L1.5
30. SHADE SAIL SUPPORT COLUMN; REF. SHADE SAIL PLAN 1/L1.5
31. SLEEVE FOR FUTURE UTILITY; REF. DTL 6/IR1.2
32. PLANTING BED; REF. DTL 1/L1.6
33. CONCRETE STAGE WITH CHECKERBOARD PATTERN; REF. DTL 4/L1.5
34. LANDSCAPE BOULDER. SIZE PER PLAN GRAPHIC & DTL 3/L1.1. INSTALL PER DTL 3/L1.1.
35. TRAFFIC REFLECTOR BUTTON ADHERED TO BOULDER; REF. 6/L1.3

The user of this file agrees to assume all responsibility for any modifications to or use of this drawing file that is inconsistent with the requirements of the Rules and Regulations of the Texas Board of Architectural Examiners. Neither the printed document nor the digital media may be altered or amended without the express written permission of the named professional.

REGISTERED LANDSCAPE ARCHITECT LARRY A. HICKS 910 STATE OF TEXAS 2/9/11

RVK Architects Interior Designers Landscape Architects

San Antonio Parks and Recreation Department

Capital Improvements Management Services

Date:	Revisions/Submissions
2/23/11	Addendum #1

CITY OF SAN ANTONIO
CAPITAL IMPROVEMENTS MANAGEMENT
SERVICES DEPARTMENT
VERTICAL PARKS DIVISION
MUNICIPAL PLAZA BUILDING 114 W. COMMERCE
P.O. BOX 839966 SAN ANTONIO, TX 78283-3966
TEL. (210) 207-2879 FAX (210) 207-2197

BEACON HILL LINEAR PARK - PHASE ONE
1406 MICHIGAN AVENUE
SAN ANTONIO, TEXAS
HARDSCAPE PLAN

L1.2

Designed By: DAS & LAH
Drawn By: ND & DAS
Date: 02/10/2011
Project No. : 09076.D
Filename: $L1.1 TO L1.3.DWG

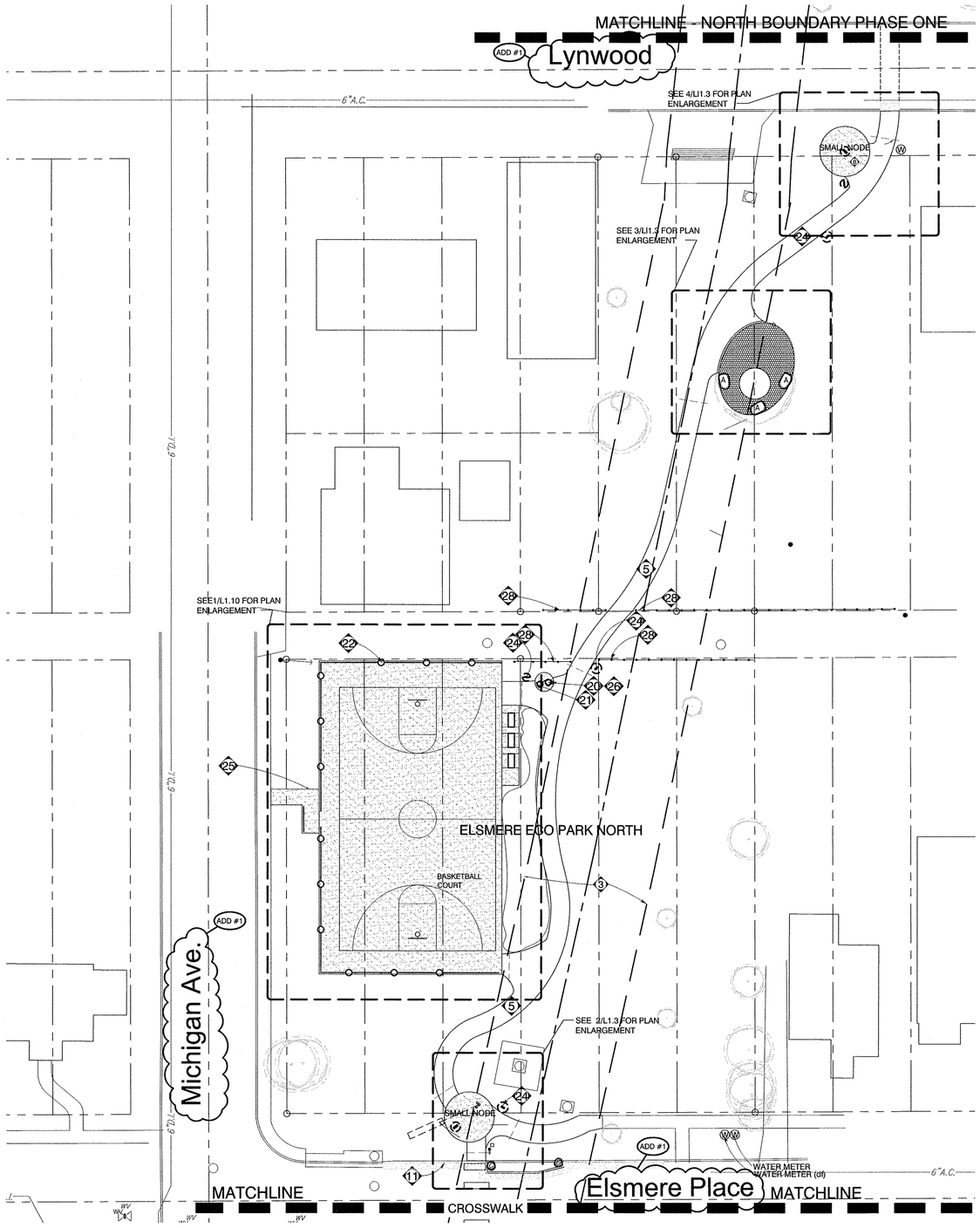

1 HARDSCAPE PLAN
L1.3 1" = 20'-0"

0 10' 20' 40'
(IN FEET)

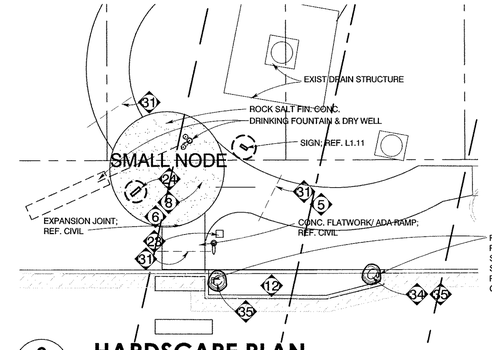

2 HARDSCAPE PLAN
L1.3 1" = 10'-0"

0 5' 10' 20'
(IN FEET)

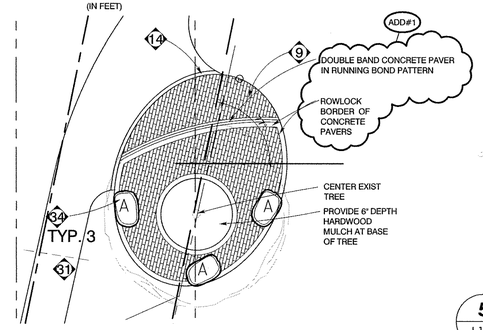

3 HARDSCAPE PLAN
L1.3 1" = 10'-0"

0 5' 10' 20'
(IN FEET)

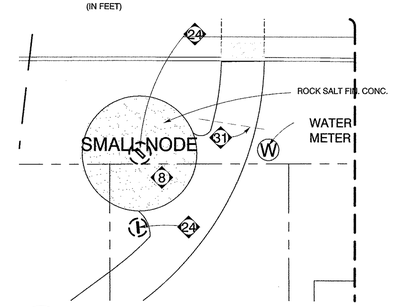

4 HARDSCAPE PLAN
L1.3 1" = 10'-0"

0 5' 10'
(IN FEET)

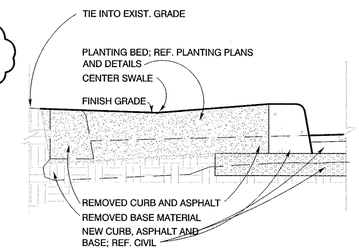

5 DETAIL @ CURB EXTENSION
L1.3 3/4" = 1'-0"

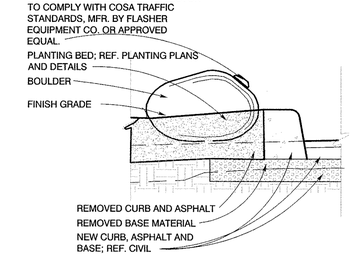

6 BOULDER & REFLECTOR @ CURB EXTENSION
L1.3 3/4" = 1'-0"

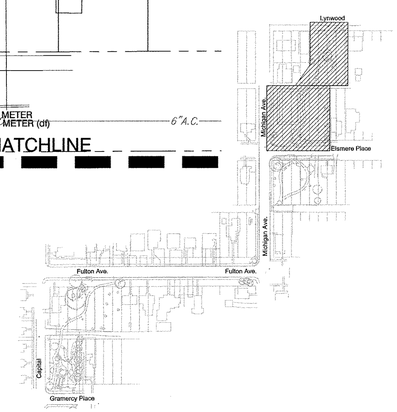

7 LOCATION MAP
L1.3 1" = 200'-0"

LEGEND - HARDSCAPE

- CONCRETE FLATWORK; REF. CIVIL PLANS
- ASPHALT FOR VEHICULAR TRAFFIC (ASPH). REF. CIVIL PLANS
- CONCRETE PAVERS; REF. DTL 4/L1.8
- SOLAR LED LIGHT; REF. KEYNOTE #23
- DRINKING FOUNTAIN; REF. CIVIL, DTL 1/L1.9 AND PLUMBING PLAN
- WATER METER; REF. CIVIL UTILITY PLANS
- FENCE
- WOOD POST & CABLE BARRIER, REF. DTL. 3/L1.9
- TRASH RECEPTACLE
- BENCH
- PET WASTE STATION
- FIXED BOLLARD
- LANDSCAPE/ SEAT BOULDER SIZE 'A; REF. DTL. 3/L1.1
- LANDSCAPE/ SEAT BOULDER SIZE 'B'; REF. DTL 3/L1.1
- LANDSCAPE BOULDER SIZE 'C'; REF. DTL 3/L1.1
- BIOFILTRATION PLANTINGS; REF. PLANTING PLANS
- DESERT WASH CHANNEL; REF. DTL 4/L1.7
- DESERT WASH EDGE & RAIN GARDEN BASIN; REF DTLS 4/L1.7 AND 5/L1.7

NOTES (#) Keyed on Plan)

1. NOT USED
2. EXISTING RETAINING WALL TO REMAIN; PROTECT DURING CONSTRUCTION. FOR TREATMENT REFERENCE GENERAL NOTES.
3. EXISTING REINF. CONC. BOX CULVERTS @ APPROX. 3' BELOW FINISH GRADE. LOCATION AND DEPTH ARE ESTIMATIONS ONLY. DEPTH BELOW FINISH GRADE IS NOT CONSISTENT.
4. DRINKING FOUNTAIN; 1/L1.9
5. PAVEMENT @ TRAIL / WALK (ATB); REF. CIVIL FOR LAYOUT AND DTL. 1/L1.8
6. SUBGRADE DRY WELL; 1/L1.9
7. CONCRETE FLATWORK PER CIVIL
8. CONCRETE PAVEMENT; REF. DTL 3/L1.8
9. CONCRETE PAVERS OVER GEOGRID; REF. DTL 4/L1.8, 5/L1.8 AND 6/L1.8
10. POURED IN PLACE RUBBER SURFACING; REF. DTL 3/L1.7
11. CONCRETE CURB @ STREET; REF. CIVIL
12. CURB EXTENSION AT STREET ; REF. DTL 5/L1.3 & PLANTING PLANS
13. CONCRETE CURB @ PLAY AREA ; REF.DTL 3/L1.7
14. CONCRETE CURB @ PAVERS/ ATB JUNCTURE; REF. DTL 5/L1.8
15. FIXED BOLLARD; REF. DTL 9/L1.9
16. LOG WALL @ PLAY CAVE; REF. DTL 2/L1.6
17. STONE BLOCK WALL; REF. DTL 5/L1.6
18. NOT USED
19. BENCH; REF. DTL 6/L1.9
20. TRASH RECEPTACLE; REF. DTL 7/L1.9
21. RECYCLING RECEPTACLE; REF. DTL 8/ L1.9
22. 8' HT FENCE; REF. DTL 2/L1.10
23. SOLAR LIGHT WITH 25' HT POLE. REF. STRUCTURAL DRAWINGS FOR FOOTING
24. SIGN REF. SIGN PLAN L1.11
25. LOCATION FOR FUTURE BIKE RACK AND CONC. PAD. NOT IN THIS CONTRACT.
26. PET WASTE BAG DISPENSER ATTACHED TO TRASH RECEPTACLE; REF. DTL 2/L1.9
27. FIELD STONE PAVEMENT; REF. DTL 7/L1.8
28. WOOD POST AND CABLE BARRIER; REF. CIVIL FOR LAYOUT AND DTL 3/L1.9
29. PICNIC UNIT - INCLUDES SLAB, TABLE, TRASH & GRILL; REF. DTL 5/L1.5
30. SHADE SAIL SUPPORT COLUMN; REF. SHADE SAIL PLAN 1/L1.5
31. SLEEVE FOR FUTURE UTILITY; REF. DTL 6/IR1.2
32. PLANTING BED; REF. DTL 1/L1.6
33. CONCRETE STAGE WITH CHECKERBOARD PATTERN; REF. DTL 4/L1.5
34. LANDSCAPE BOULDER. SIZE PER PLAN GRAPHIC & DTL 3/L1.1. INSTALL PER DTL 3/L1.1.
35. TRAFFIC REFLECTOR BUTTON ADHERED TO BOULDER; REF. 6/L1.3

The user of this file agrees to assume all responsibility for any modifications to or use of this drawing file that is inconsistent with the requirements of the Rules and Regulations of the Texas Board of Architectural Examiners. Neither the printed document nor the digital media may be altered or amended without the express written permission of the named professional.

REGISTERED LANDSCAPE ARCHITECT LARRY A. HICKS 910 STATE OF TEXAS

RVK
Architects
Interior Designers
Landscape Architects

Capital Improvements Management Services

San Antonio Parks and Recreation Department

Date:	Revisions/Submissions
2/23/11	Addendum #1

CITY OF SAN ANTONIO
CAPITAL IMPROVEMENTS MANAGEMENT
SERVICES DEPARTMENT
VERTICAL PARKS DIVISION
MUNICIPAL PLAZA BUILDING 114 W. COMMERCE
P.O. BOX 839966 SAN ANTONIO, TX 78283-3966
TEL. (210) 207-2879 FAX (210) 207-2197

BEACON HILL LINEAR PARK - PHASE ONE
1406 MICHIGAN AVENUE
SAN ANTONIO, TEXAS
HARDSCAPE PLAN

L1.3

Designed By: DAS & LAH
Drawn By: ND & DAS
Date: 02/10/2011
Project No. : 09076.D
Filename: $L1.1 TO L1.3.DWG

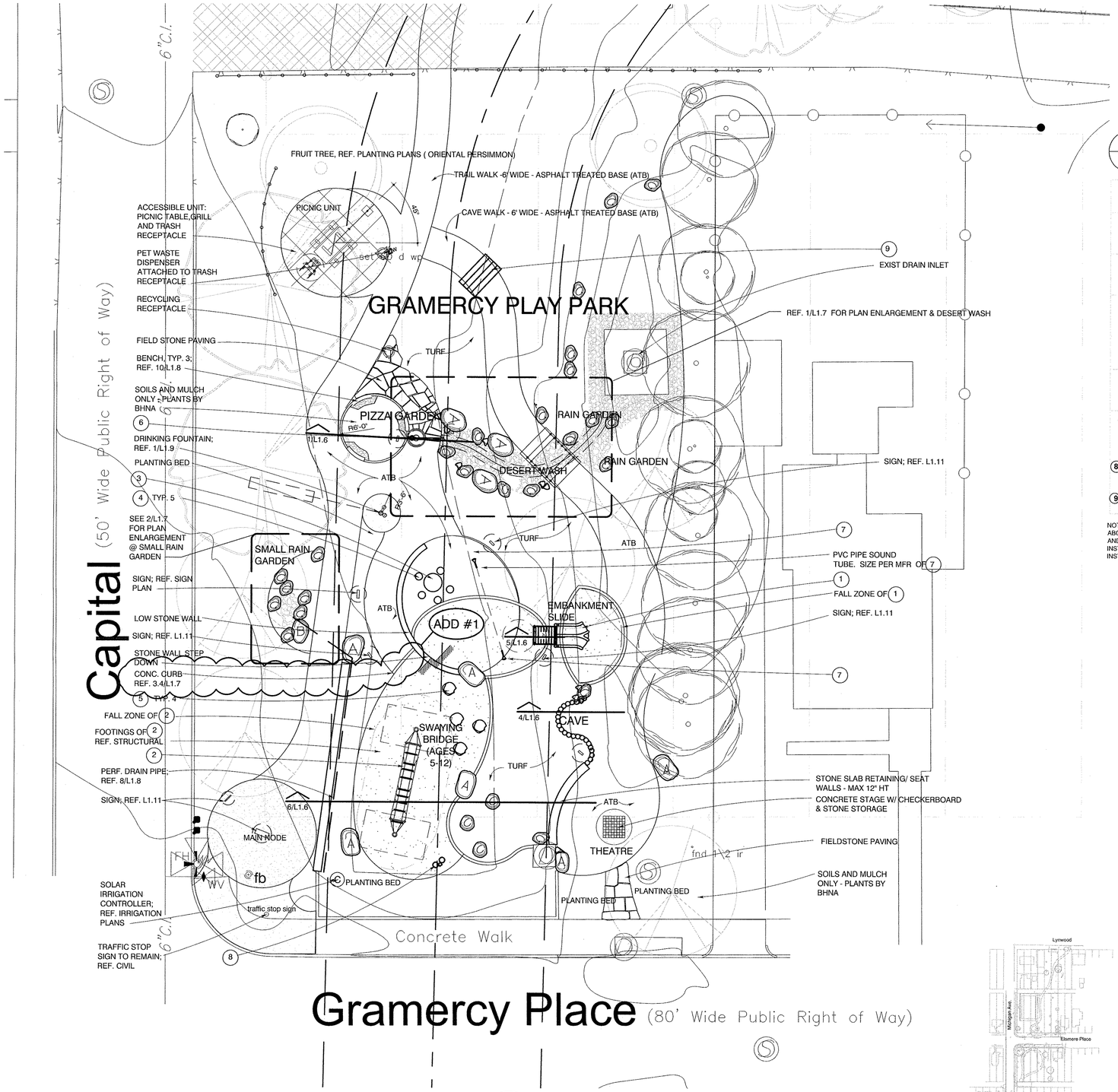

1 / L1.4 PLAN ENLARGEMENT @ PLAY AREA

1" = 10'-0"

0 5' 10' 20'
(IN FEET)

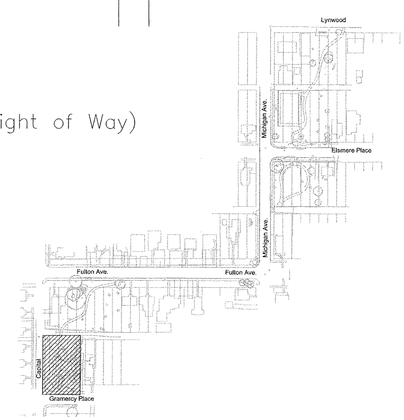

3 / L1.4 LOCATION MAP

1" = 200'-0"

The user of this file agrees to assume all responsibility for any modifications to or use of this drawing file that is inconsistent with the requirements of the Rules and Regulations of the Texas Board of Architectural Examiners. Neither the printed document nor the digital media may be altered or amended without the express written permission of the named professional.

REGISTERED LANDSCAPE ARCHITECT
LARRY A. HICKS
910
STATE OF TEXAS
2/23/11

RVK
Architects
Interior Designers
Landscape Architects

Capital Improvements Management Services
People Build San Antonio Process Systems

San Antonio Parks and Recreation Department

Date:	Revisions/Submissions
2/23/11	Addendum #1

2 / L1.4 SCHEDULE OF SITE FEATURES (# EQUIPMENT KEYED TO PLAN)

OR APPROVED EQUALS ON ALL FEATURES EXCEPT FEATURE PLAY COMPONENT BY KOMPAN.

1	EMBANKMENT SLIDE	DOUBLE SLIDE	1	Big Toys	MEC-109	IN GROUND	BLUE SLIDE WITH GREY RECYCLED WOOD AND COLORED RECYCLED STEEL SUPPORTS	ADD #1
2	FEATURE PLAY COMPONENT- Ages 5-12	SWAYING BRIDGE	1	Kompan	COR15091	INGROUND	RED ROPES AND GALVANIZED POLES	OWNER SUPPLIED, CONTRACTOR TO INSTALL COMPLETE
3	LARGE MUSHROOM	FIBERGLASS REINFORCED CEMENT (GFRC) BODY	1	GameTime - Play trails	38109	INGROUND	RED AND WHITE	OWNER SUPPLIED, CONTRACTOR TO INSTALL COMPLETE
4	SMALL MUSHROOM	FIBERGLASS REINFORCED CEMENT (GFRC) BODY	5	GameTime - Play trails	38110	INGROUND	RED AND WHITE	OWNER SUPPLIED, CONTRACTOR TO INSTALL COMPLETE
5	MEDIUM HOP ROCKS	POLYFIBERCRETE. 2'-7" MAX HT X 3'-2" MAX WIDTH . MAINTAIN 18" MIN TO 36" MAX SPACING BTWN ROCKS.	4	Rocks and Ropes		INGROUND	CUSTOM FINISH TO MATCH NATIVE STONE.	
6	WATER TAP- Ages 2 - 5	POST WATER TAP. When pressure is applied, the water evacuates. Permanent plumbing.	1	Kompan	M593P	INGROUND	PER MFR.	OWNER SUPPLIED, CONTRACTOR TO INSTALL COMPLETE
7	FLOWER TALK TUBE - Ages 2-5	FLOWER STEM IS GALV. STEEL PIPE WITH TGIC POLYESTER POWDER COATING	2	GameTime - Play trails	38018	IN GROUND	YELLOW FLOWER PETAL CANOPY WITH GREEN TUBING	ADD #1 OWNER SUPPLIED, CONTRACTOR TO INSTALL COMPLETE
8 (ADDITIVE ALT.)	BONGO DRUMS	Free Standing Double Drums	1	Game Time	36033	IN GROUND		OWNER SUPPLIED, CONTRACTOR TO INSTALL
9 (ADDITIVE ALT.)	GARDEN GATE ARBOR	Arbor for all ages. Includes 4- 2' Garden Soxx.	1	Playworld Systems	ZZX0D444		Green	

NOTES: PLAY ITEMS LISTED ABOVE AND MFR'D. BY KOMPAN AND BIG TOYS ARE TO BE INSTALLED BY CERTIFIED INSTALLER

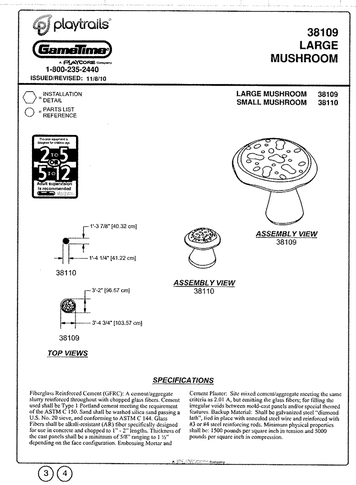

3 4

KOMPAN Product Info

Water Tap • M593P

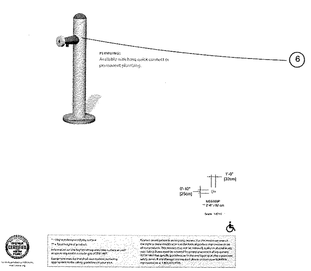

6

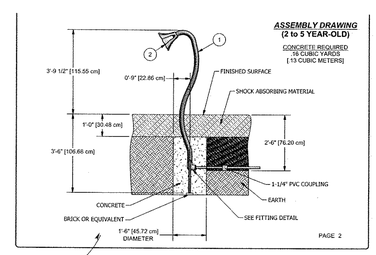

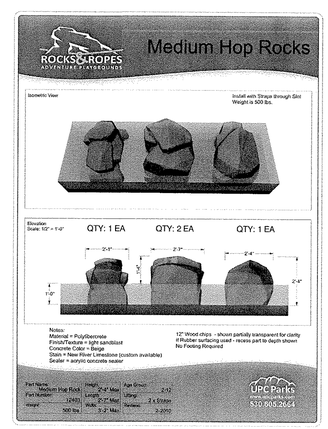

9

SPECIFICATIONS - BIG TOYS EMBANKMENT SLIDE

6" DIAMETER STEEL TUBING - ALL STEEL TUBING SHALL BE 6" DIAMETER AND PRODUCED FROM 12 GAUGE GALVANIZED SHEET STOCK USING RECLAIMED SCRAP METAL, LIGHTLY SANDBLASTED, PRIMED AND ELECTRO-STATICALLY POWDER COATED AFTER ALL FABRICATION HAS BEEN COMPLETED.

ALL RECYCLED PLASTIC COMPONENTS SHALL BE MADE FROM 98% POST CONSUMER RECYCLED HIGH DENSITY POLYETHYLENE WITH THE REMAINING 2% CONSISTING OF PIGMENTS AND UV INHIBITORS. ALL LOAD BEARING COMPONENTS SHALL BE GLASS REINFORCED.

RECYCLED PLASTIC PLATFORMS SHALL BE ASSEMBLED FROM RECYCLED HIGH DENSITY POLYETHYLENE. PLATFORMS SHALL BE CONSTRUCTED FROM THE FOLLOWING COMPONENTS: 5/4 PLATFORM FLOOR AND DOUBLER BOARDS, 2 x 4 SUPPORT BOARDS, AND 2 x 6 SKIRTING BOARDS. ALL PLATFORMS SHALL BE CONSTRUCTED USING NUMBER #10 SQUARE DRIVE STAINLESS STEEL SCREWS. ALL SUPPORT, DOUBLER, AND SKIRTING COMPONENTS SHALL BE GLASS REINFORCED FOR STRENGTH.

PLASTIC MATERIALS SHALL NOT BE CONSTRUCTED OF POLYVINYL CHLORIDE

THE WARRANTY WITH RESPECT TO FAILURE DUE TO MATERIAL OR PRODUCTION DEFECTS ON PAINTED METAL COMPONENTS AND SOLID RECYCLED PLASTIC COMPONENTS SHALL NOT BE LESS THAN 50 YEARS COMMENCING ON THE DATE OF DELIVERY.

THE WARRANTY WITH RESPECT TO FAILURE DUE TO MATERIAL OR PRODUCTION DEFECTS ON ENGINEERED TIMBER AND HOLLOW PLASTIC COMPONENTS SHALL NOT BE LESS THAN 15 YEARS COMMENCING ON THE DATE OF DELIVERY.

7 ADD #1

ADD #1 L1.4

CITY OF SAN ANTONIO
CAPITAL IMPROVEMENTS MANAGEMENT
SERVICES DEPARTMENT
VERTICAL PARKS DIVISION
MUNICIPAL PLAZA BUILDING 114 W. COMMERCE
P.O. BOX 839966 SAN ANTONIO, TX 78283-3966
TEL. (210) 207-2879 FAX (210) 207-2197

BEACON HILL LINEAR PARK - PHASE ONE
1406 MICHIGAN AVENUE
SAN ANTONIO, TEXAS
ENLARGED PLAY AREA

Designed By: DAS & LAH
Drawn By: ND & DAS
Date: 02/10/2011
Project No. : 09076.D
Filename: $L1.4.DWG

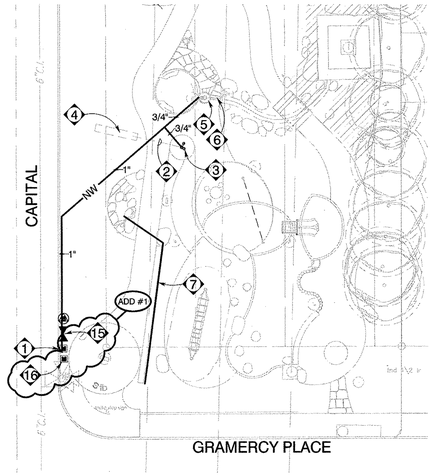

1 PLUMBING PLAN
L1.14 — 1" = 20'

0 10' 20' 40' (IN FEET)

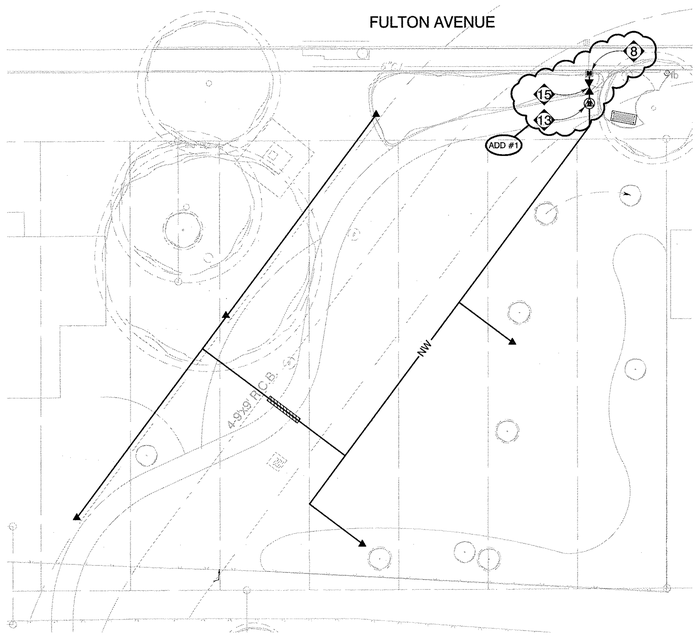

2 PLUMBING PLAN
L1.14 — 1" = 20'

0 10' 20' 40' (IN FEET)

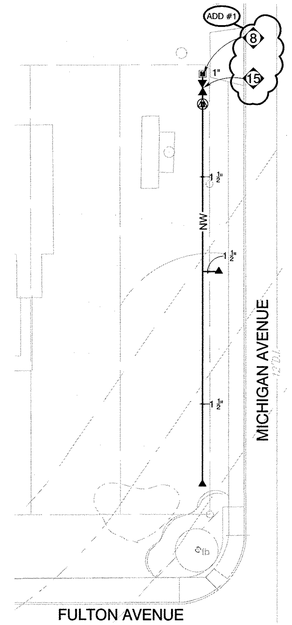

3 PLUMBING PLAN
L1.14 — 1" = 20'

0 10' 20' 40' (IN FEET)

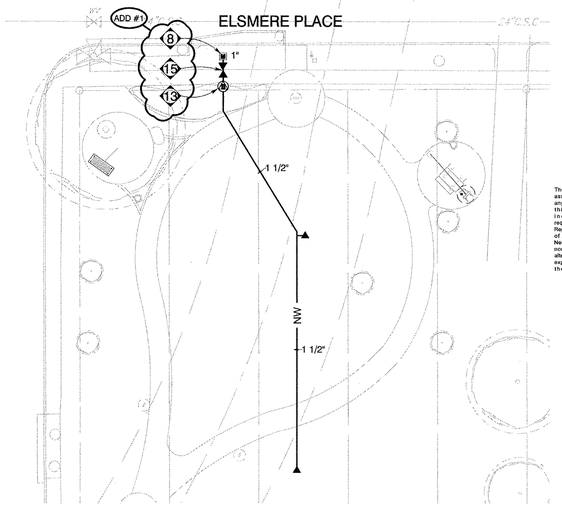

4 PLUMBING PLAN
L1.14 — 1" = 20'

0 10' 20' 40' (IN FEET)

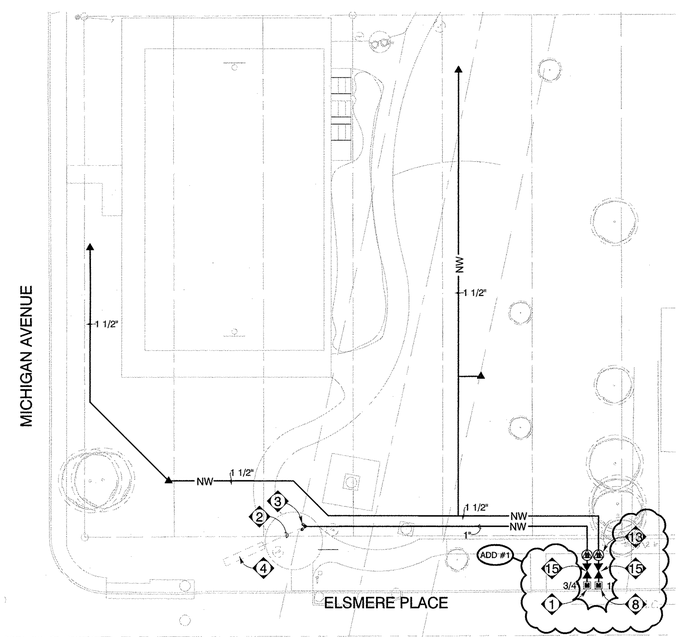

5 PLUMBING PLAN
L1.14 — 1" = 20'

0 10' 20' 40' (IN FEET)

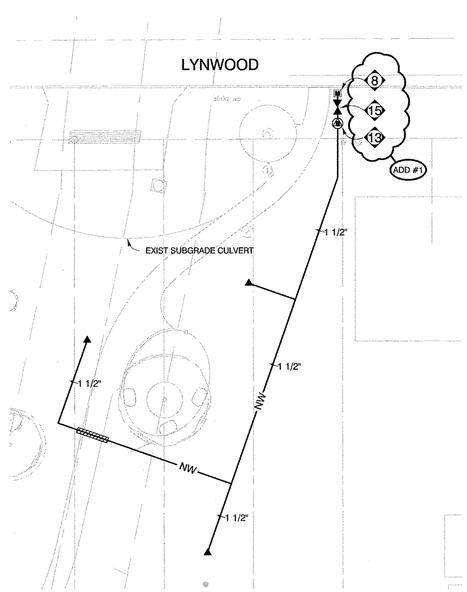

6 PLUMBING PLAN
L1.14 — 1" = 20'

0 10' 20' 40' (IN FEET)

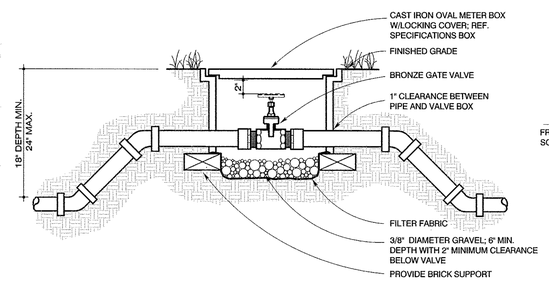

7 BRONZE GATE VALVE
L1.14 — NOT TO SCALE

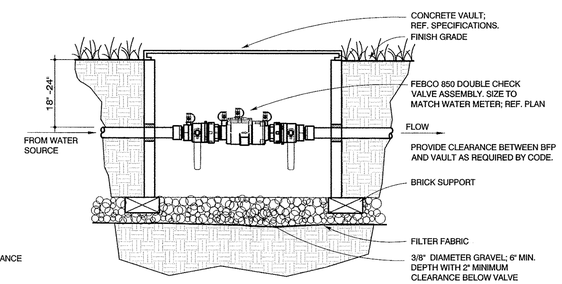

8 BACKFLOW PREVENTION DEVICE
L1.14 — NOT TO SCALE

LEGEND

- NW — NEW WATERLINE
- NEW WATER METER, BOX & COVER; REF. CIVIL
- BACKFLOW PREVENTER DTL. 8 THIS SHT.; DOUBLE CHECK VALVE ASSEMBLY
- NEW CUT-OFF VALVE, BOX & COVER; MATCH UNIT SIZE TO WATER METER.
- QCV — QUICK COUPLING VALVE DTL. 3/IR1.2

NOTES (keyed # note)

1. NEW WATER SERVICE (POTABLE TO DRINKING WATER FOUNTAIN); REF. CIVIL
2. DRAINAGE TO DRYWELL; REF. DTL. 1/L1.9
3. DRINKING WATER FOUNTAIN; REF. DTL. 1/L1.9
4. DRYWELL; REF. DTL. 1/L1.9
5. WATER TAP; REF. DTL. 1/L1.6
6. DRAINAGE LATERAL FROM WATER TAP BASIN; REF. DTL. 1/L1.6
7. SITE DRAINAGE LATERAL FROM LANDSCAPE STONE WALL. DISCHARGE WITHIN SMALL RAIN GARDEN.
8. NEW WATER SERVICE (NON-POTABLE IRRIGATION); REF. CIVIL
9. LAYOUT AND FLAG LOCATIONS OF ALL QUICK COUPLER VALVES. OBTAIN APPROVAL BY LANDSCAPE ARCHITECT PRIOR TO TRENCHING AND/OR INSTALLATION.
10. PROVIDE PURPLE NON-POTABLE LOCKING RUBBER COVER ON ALL QUICK COUPLER VALVES.
11. PROVIDE LABELING PER DESIGN STANDARDS SET OUT IN 344.62 (N.) OF THE TEXAS ADMINISTRATIVE CODE.
12. ALL MAINLINE PIPING FOR QUICK COUPLER VALVES SHALL BE 1 1/2" SCHEDULE 40 PVC.
13. PROVIDE A WYE STRAINER ON ALL QUICK COUPLER SYSTEMS PER BACKFLOW PREVENTION AND CROSS CONNECTION STANDARDS SET OUT IN 344.50 (e.)(3) OF THE TEXAS ADMINISTRATIVE CODE.
14. PROVIDE CURRENT TEST & MAINTENANCE REPORT ON DOUBLE CHECK ASSEMBLY.
15. CUT-OFF VALVE PER DTL. 7/L1.14
16. REFER TO IRRIGATION PLANS IR1.1

The user of this file agrees to assume all responsibility for any modifications to or use of this drawing file that is inconsistent with the requirements of the Rules and Regulations of the Texas Board of Architectural Examiners. Neither the printed document nor the digital media may be altered or amended without the express written permission of the named professional.

The user of this file agrees to assume all responsibility for any modifications to or use of this drawing file that is inconsistent with the requirements of the Rules and Regulations of the Texas Board of Architectural Examiners. Neither the printed document nor the digital media may be altered or amended without the express written permission of the named professional.

REGISTERED LANDSCAPE ARCHITECT — LARRY A. HICKS — 910 — STATE OF TEXAS — 2/23/11

STATE OF TEXAS — LARRY A. HICKS — 2722 — LICENSED ARCHITECT — 2/23/11

RVK
Architects
Interior Designers
Landscape Architects

Capital Improvements Management Services
People — Build San Antonio — Process — Systems

San Antonio Parks and Recreation Department

Date:	Revisions/Submissions
2/23/11	Addendum #1

CITY OF SAN ANTONIO
CAPITAL IMPROVEMENTS MANAGEMENT
SERVICES DEPARTMENT
VERTICAL PARKS DIVISION
MUNICIPAL PLAZA BUILDING 114 W. COMMERCE
P.O. BOX 839966 SAN ANTONIO, TX 78283-3966
TEL. (210) 207-2879 FAX (210) 207-2197

BEACON HILL LINEAR PARK - PHASE ONE
1406 MICHIGAN AVENUE
SAN ANTONIO, TEXAS
PLUMBING PLAN

1 / L1.14

Designed By: DAS & LAH
Drawn By: DW & DAS
Date: 02/10/2011
Project No.: 09076.D
Filename: $L1.14.DWG